REVISIONS

NO.	DATE	DESCRIPTION

DEFINITIVE SUBDIVISION PLAN
for
LIVINGSTONE AVENUE IMPROVEMENTS

Beverly, MA
JULY 2020

OWNER & APPLICANT: 7 PORTER TERRACE, LLC
100 CUMMINGS CENTER, SUITE 247-D
BEVERLY, MA 01915

ENGINEER: GRIFFIN ENGINEERING GROUP, LLC
495 CABOT ST, 2ND FLOOR
BEVERLY, MA 01915

SURVEYOR: LEBLANC SURVEY ASSOCIATES
161 HOLTEN STREET
DANVERS, MA 01923

ROBERT H GRIFFIN CIVIL #35686 COMMONWEALTH OF MASSACHUSETTS PROFESSIONAL ENGINEER

7.13.20

I CERTIFY THAT THIS PLAN WAS PREPARED IN ACCORDANCE WITH THE RULES AND REGULATIONS OF THE REGISTERS OF DEEDS.

DATE _____ _____

FOR REGISTRY USE ONLY

I, _____, CLERK OF THE CITY OF BEVERLY, MA, CERTIFY THAT THE NOTICE OF APPROVAL OF THIS PLAN BY THE BEVERLY PLANNING BOARD HAS BEEN RECEIVED AND RECORDED IN THIS OFFICE AND THAT NO APPEAL WAS RECEIVED DURING THE TWENTY (20) DAYS NEXT AFTER SUCH RECEIPT AND RECORDING OF SUCH NOTICE.

_____ _____
BEVERLY CITY CLERK DATE

LOCUS PLAN SCALE: 1" = 800' +/-

List of Drawings:

COVER SHEET
C-1: PLAN OF LAND
C-2: SITE PLAN & PROFILE
C-3: DETAILS I
C-4: DETAILS II

LIST OF WAIVERS FROM SUBDIVISION REGULATIONS:

1. SECTION III.C.2: PLAN SCALE REQ'D IS 1"=40'. PLAN SCALE OF 1"=20' & 1"=30' PROVIDED.
2. SECTION IV.A.3: MIN. 50' R.O.W. & 32' PAVED WIDTH. A 40' R.O.W. EXISTS & 24' PAVED WIDTH IS PROPOSED.
3. SECTION IV.A.5.a: DEAD END STREET <500' REQ'D. THE IMPROVEMENTS WILL EXTEND, BY APPROXIMATELY 280', THE EXISTING 250' LONG DEAD-END STREET [350' APPROVED] (LIVINGSTONE AVE) (APPROX. 630' DEAD END STREET PROPOSED).
4. SECTION IV.A.5.b: CUL-DE-SAC REQUIRED AT DEAD END STREET. A 60-FT DIA. CUL-DE-SAC (PAVEMENT) IS PROPOSED.
5. SECTION IV.D.1: 20' UTILITY EASEMENT REQ'D. 10' AND 15'-WIDE EASEMENTS PROVIDED.
6. SECTION IV.J: UNDERGROUND UTILITIES. OVERHEAD ELECTRIC, TELEPHONE, & CABLE SERVICES PROPOSED.
7. SECTION V.D: SIDEWALKS: 5-FT SIDEWALKS REQ'D . 4-FT SIDEWALKS PROPOSED (1-SIDE ONLY) .
8. SECTION V.E: GRANITE CURBS. BITIMINOUS BERM PROPOSED.
9. SECTION V.G: STREET TREES. NONE PROPOSED.
10. SECTION V.K. FIRE ALARM SYSTEM. NONE PROPOSED.

CITY OF BEVERLY PLANNING BOARD

_____
_____
_____
_____
_____
_____
_____

DATE:

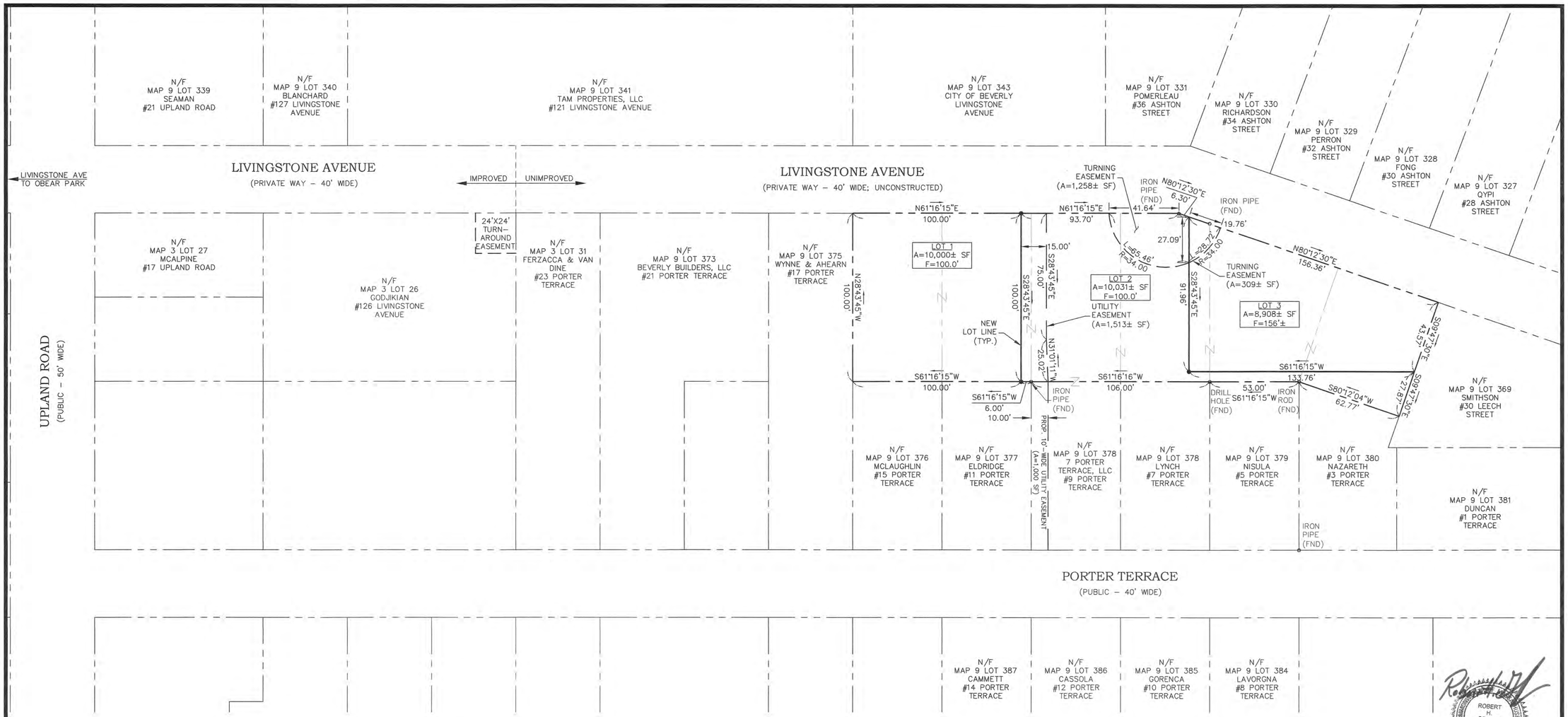

ROBERT H. GRIFFIN CIVIL #38686 REGISTERED PROFESSIONAL ENGINEER COMMONWEALTH OF MASSACHUSETTS

7.13.20

AREA ADJUSTMENT FOR WETLANDS & TURNAROUND EASEMENT

LOT	TOTAL AREA	AREA IN WETLANDS	20% OF WETLAND AREA	TURNAROUND EASEMENT AREA	TOTAL ADJUSTMENT AREA
1	10,000 S.F.	0 S.F.	0 S.F.	0 S.F.	10,000 S.F.
2	11,432 S.F.	179 S.F.	36 S.F.	1,258 S.F.	10,031 S.F.
3	9,556 S.F.	423 S.F.	84 S.F.	309 S.F.	8,908 S.F.

NOTE: LOT 3 IS NOT A BUILDABLE LOT.

LEGEND

N72°32'14"E 177.24'	EXIST. PROPERTY LINE
N23°43'25"W 127.48'	PROP. PROPERTY LINE
○	EXIST. IRON ROD OR DRILL HOLE
●	PROP. IRON ROD TO BE SET

I CERTIFY THAT THIS PLAN WAS PREPARED IN ACCORDANCE WITH THE RULES AND REGULATIONS OF THE REGISTERS OF DEEDS.

DATE _____

FOR REGISTRY USE ONLY

I, _____, CLERK OF THE CITY OF BEVERLY, MA, CERTIFY THAT THE NOTICE OF APPROVAL OF THIS PLAN BY THE BEVERLY PLANNING BOARD HAS BEEN RECEIVED AND RECORDED IN THIS OFFICE AND THAT NO APPEAL WAS RECEIVED DURING THE TWENTY (20) DAYS NEXT AFTER SUCH RECEIPT AND RECORDING OF SUCH NOTICE.

BEVERLY CITY CLERK _____ DATE _____

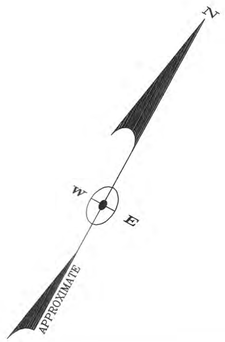

GRAPHIC SCALE

(IN FEET)
1 inch = 30 ft.

CITY OF BEVERLY PLANNING BOARD

DATE:

No.	Date	Description

Revisions

LEBLANC SURVEY ASSOCIATES

161 HOLTEN STREET
DANVERS, MA 01923
978-774-6012

Griffin Engineering Group, LLC

495 Cabot Street, 2nd Floor
Beverly, MA 01915

Tel: 978-927-5111
Fax: 978-927-5103

LIVINGSTONE AVENUE IMPROVEMENTS BEVERLY, MA

PLAN OF LAND

Scale: 1"=30'
Job No.: 1754
File Name: p/p/b/m
Date: 7/13/20

C-1

ZONING DISTRICT: R-10
MINIMUM LOT AREA: 10,000 SF
MINIMUM FRONTAGE: 100'
SETBACKS:
FRONT: 20'
SIDE: 15'
REAR: 25'

ELEVATION BENCHMARKS DATUM: CITY OF BEVERLY		
NO.	DESCRIPTION	ELEV.
1.	NAIL AT #7 DRIVEWAY	50.89'
2.	IRON PIPE @ #11 LOT CNR	54.96'
3.	SMH INV. @ HOUSE #5	45.03'

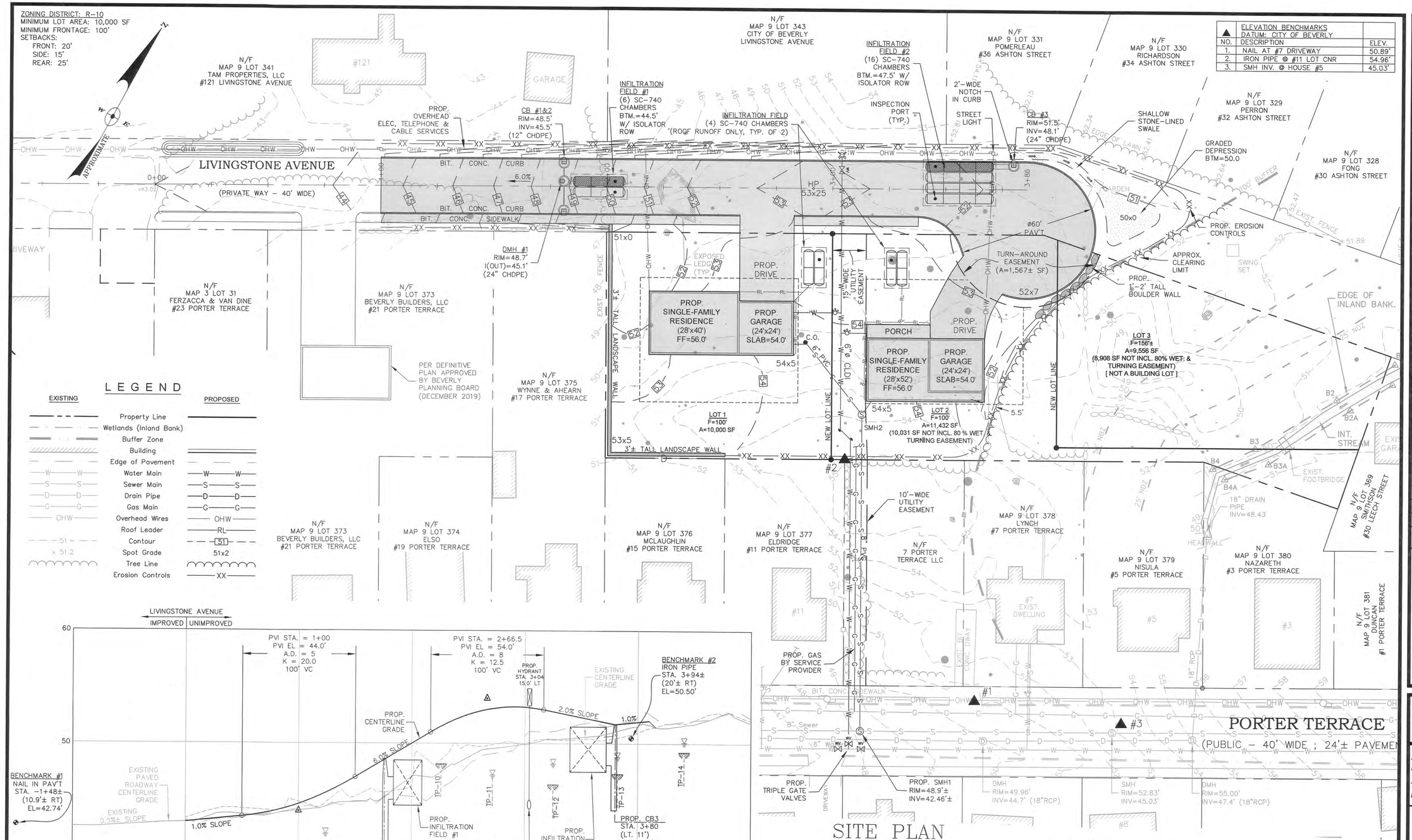

LEGEND

EXISTING		PROPOSED
	Property Line	
	Wetlands (Inland Bank)	
	Buffer Zone	
	Building	
	Edge of Pavement	
W	Water Main	W
S	Sewer Main	S
D	Drain Pipe	D
G	Gas Main	G
OHW	Overhead Wires	OHW
	Roof Leader	RL
51	Contour	51
x 51.2	Spot Grade	51x2
	Tree Line	
	Erosion Controls	XX

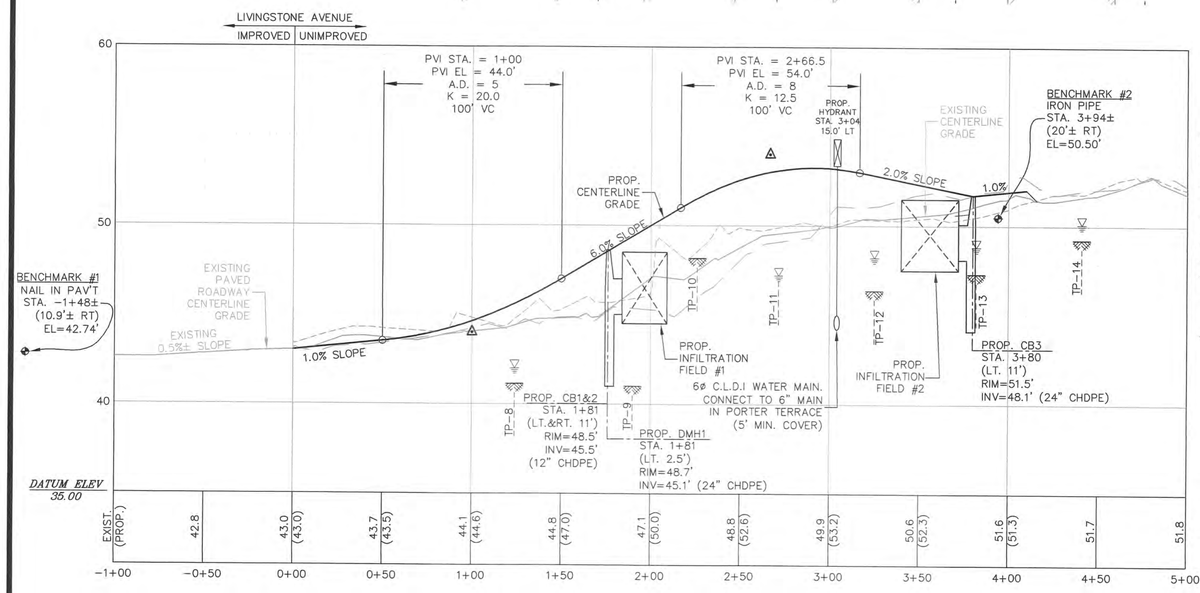

ROAD CENTERLINE PROFILE

SCALE: HORIZONTAL – 1"=40'
VERTICAL – 1" = 4'

SITE PLAN

GRAPHIC SCALE

(IN FEET)
1 inch = 20 ft.

PROFILE NOTES:

1) ALL CATCHBASINS, DRAIN, & SEWER MANHOLES TO BE PRECAST CONCRETE WITH FLAT TOPS.

2) ALL CATCHBASINS TO HAVE 4' (MIN.) DEEP SUMP WITH A HOOD ON THE OUTLET PIPE.

3) REFER TO UTILITIES SITE PLAN FOR INDIVIDUAL LOT WATER & SEWER SERVICE CONNECTION LOCATIONS. WATER & SEWER SERVICE CONNECTIONS TO HAVE MINIMUM 10' HORIZONTAL SEPARATION.

4) PROPOSED GAS, ELECTRIC, TELEPHONE, & CABLE SERVICE NOT SHOWN ON PROFILE. SAID UTILITIES SIZE AND LOCATION PER SERVICE PROVIDER.

I CERTIFY THAT THIS PLAN WAS PREPARED IN ACCORDANCE WITH THE RULES AND REGULATIONS OF THE REGISTERS OF DEEDS.

DATE _____

I, _____, CLERK OF THE CITY OF BEVERLY, MA, CERTIFY THAT THE NOTICE OF APPROVAL OF THIS PLAN BY THE BEVERLY PLANNING BOARD HAS BEEN RECEIVED AND RECORDED IN THIS OFFICE AND THAT NO APPEAL WAS RECEIVED DURING THE TWENTY (20) DAYS NEXT AFTER SUCH RECEIPT AND RECORDING OF SUCH NOTICE.

BEVERLY CITY CLERK _____ DATE _____

FOR REGISTRY USE ONLY

CITY OF BEVERLY PLANNING BOARD

DATE:

No.	Date	Description

Revisions

REGISTERED PROFESSIONAL ENGINEER ROBERT H. GRIFFIN CIVIL #36586 COMMONWEALTH OF MASSACHUSETTS

7.13.20

Griffin Engineering Group, LLC
495 Cabot Street, 2nd Floor
Beverly, MA 01915
Tel: 978-927-5111
Fax: 978-927-5103

LIVINGSTONE AVENUE IMPROVEMENTS BEVERLY, MA

SITE PLAN

Scale: 1"=20'
Job No.: 1754
File Name: p/p/b/m
Date: 7/13/20

C-2

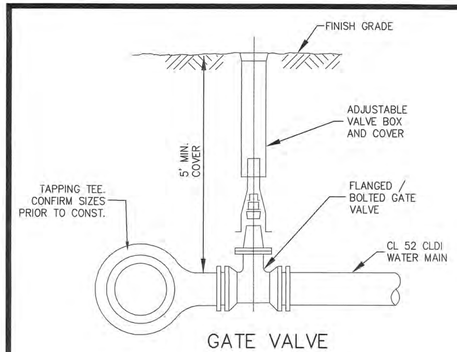

GATE VALVE

N.T.S.

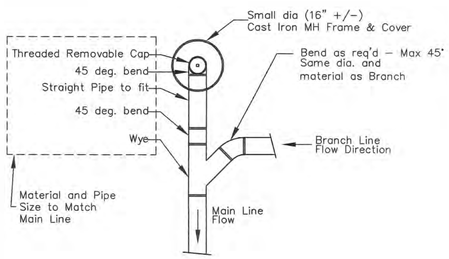

Plan

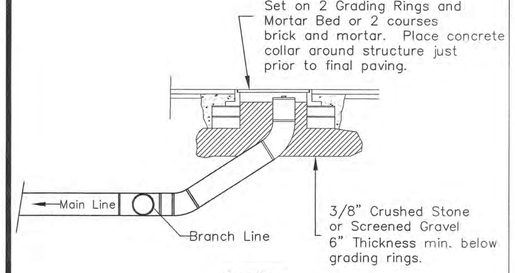

Section

SEWER CLEANOUT (TYP.)

SCALE: N.T.S.

I CERTIFY THAT THIS PLAN WAS PREPARED IN ACCORDANCE WITH THE RULES AND REGULATIONS OF THE REGISTERS OF DEEDS.

DATE _____

FOR REGISTRY USE ONLY

I, _____, CLERK OF THE CITY OF BEVERLY, MA, CERTIFY THAT THE NOTICE OF APPROVAL OF THIS PLAN BY THE BEVERLY PLANNING BOARD HAS BEEN RECEIVED AND RECORDED IN THIS OFFICE AND THAT NO APPEAL WAS RECEIVED DURING THE TWENTY (20) DAYS NEXT AFTER SUCH RECEIPT AND RECORDING OF SUCH NOTICE.

_____ BEVERLY CITY CLERK _____ DATE

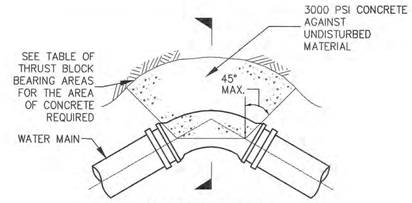

PLAN OF THRUST BLOCK AT BEND

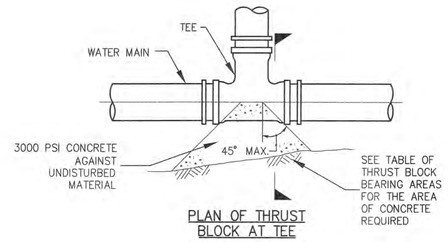

PLAN OF THRUST BLOCK AT TEE

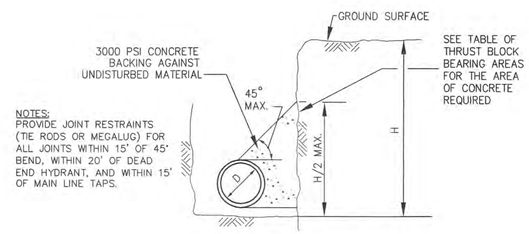

NOTES:
PROVIDE JOINT RESTRAINTS (TIE RODS OR MEGALUG) FOR ALL JOINTS WITHIN 15' OF 45° BEND, WITHIN 20' OF DEAD END HYDRANT, AND WITHIN 15' OF MAIN LINE TAPS.

THRUST BLOCK SECTION

CONCRETE THRUST BLOCK

N.T.S.

TABLE OF MINIMUM BEARING AREAS IN SQ. FT. AGAINST UNDISTURBED MATERIAL

PIPE SIZE	BEND	PRESSURE 150 PSI						
		TYPE OF SOIL CONDITION						
		A	B	C	D	E	F	G
6" and smaller	TEES & PLUGS	8.5	4.5	3	2.5	1.5	1.5	1
	90	12	6	4	3	2	1.5	1.5
	45	6.5	3.5	2.5	2	1.5	1	1
	22 1 /2	3.5	2	1.5	1	1	0.5	0.5
8"	TEES & PLUGS	15.5	8	5.5	4	3	2	1.5
	90	21.5	11	7.5	5.5	4	3	2.5
	45	12	6	4	3	2	1.5	1.5
	22 1 /2	6	3	2	1.5	1	1	1

TYPE OF SOIL CONDITION

A – SOFT CLAY; FINE LOOSE SAND
B – SAND & CLAY; MIXED OR IN LAYERS; FINE CONFINED SAND
C – HARD DRY CLAY
D – COARSE SAND
E – GRAVEL
F – SOFT ROCK
G – HARD PAN

NOTES:
1. FOR FITTINGS WITH LESS THAN 22 ½° DEFLECTION USE BEARING AREAS FOR 22 ½° BEND.
2. JOINTS SHALL NOT BE ENCASED IN CONCRETE. BEARING AREAS MAY BE DISREGARDED FOR TRENCHES IN ROCK WHERE THE TOP OF THE ROCK FACE IS AT OR ABOVE THE CROWN OF THE PIPE. HOWEVER, CONCRETE BACKING SHALL BE PLACED BETWEEN THE PIPE AND ROCK FACE.

CONCRETE THRUST BLOCK BEARING AREA

N.T.S.

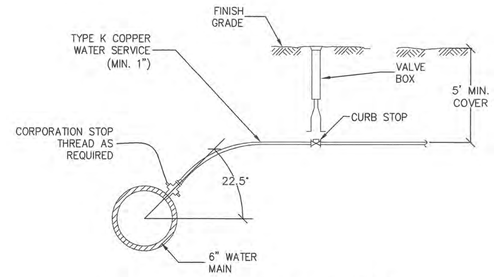

WATER SERVICE CONNECTION

N.T.S.

NOTES:
ALL CONNECTIONS PER CITY OF BEVERLY REQUIREMENTS.

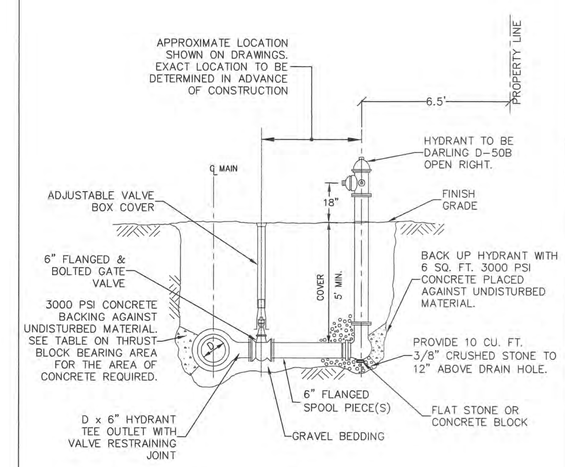

TYPICAL HYDRANT ASSEMBLY

N.T.S.

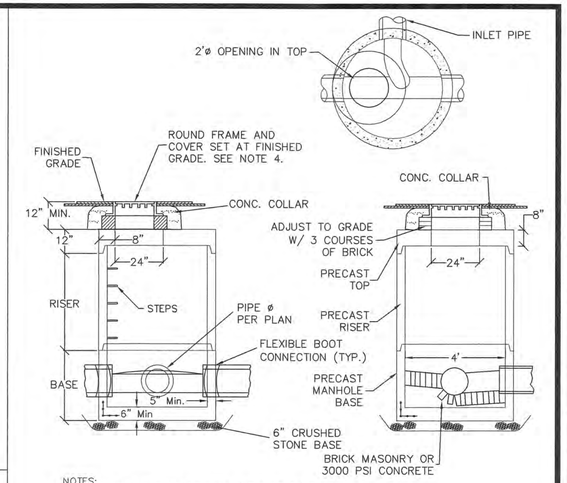

NOTES:
1. CONCRETE 4,000 PSI MINIMUM AFTER 28 DAYS.
2. REINFORCED STEEL SHALL CONFORM TO LATEST ASTM A185 SPEC. 0.12 SQ. IN./LINEAL FT. AND 0.12 SQ. IN. (BOTH WAYS) BASE BOTTOM.
3. H-20 DESIGN LOADING.
4. LEBARON FRAME AND COVER CATALOG NO. LA246 OR APPROVED EQUIVALENT.
5. SHEA PRECAST OR APPROVED EQUIVALENT.
6. TONGUE & GROOVE JOINTS SEALED WITH BUTYL RESIN. BUTYL RESIN.
7. COVER TO BE MARKED "SEWER"

4'ø PRECAST SEWER MANHOLE

N.T.S.

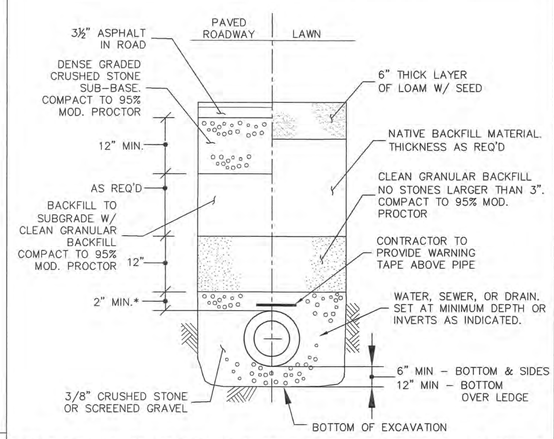

* FOR DUCTILE IRON OR RCP PIPE: TOP OF STONE IS MID-DEPTH (SPRING LINE) OF CONDUIT.

TYPICAL PIPE BEDDING SECTION

N.T.S.

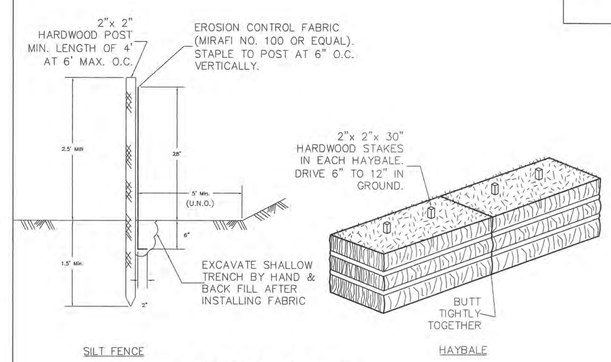

EROSION CONTROL

N.T.S.

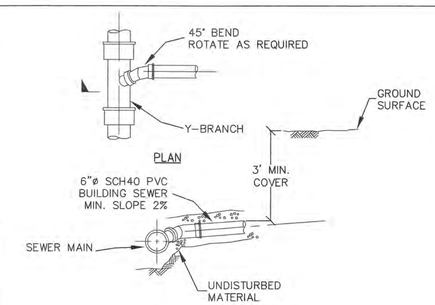

SECTION

BUILDING CONNECTION

N.T.S.

CITY OF BEVERLY PLANNING BOARD

DATE:

No.	Date	Description

Revisions

ROBERT H. GRIFFIN CIVIL #36686 PROFESSIONAL ENGINEER

7.13.20

Griffin Engineering Group, LLC
495 Cabot Street, 2nd Floor
Beverly, MA 01915
Tel: 978-927-5111
Fax: 978-927-5103

LIVINGSTONE AVENUE IMPROVEMENTS BEVERLY, MA

DETAILS I

Scale: AS SHOWN
Job No.: 1754
File Name: p/p/b/m
Date: 7/13/20

C-3

GENERAL NOTES

1. THE LOCATIONS AND ELEVATIONS OF ALL EXISTING UTILITIES SHALL BE CONSIDERED APPROXIMATE AND MUST BE VERIFIED BY THE CONTRACTOR PRIOR TO ANY CONSTRUCTION. ANY DISCREPANCIES IN THE LOCATION OF ANY UTILITIES SHOWN OR ENCOUNTERED DURING CONSTRUCTION SHALL BE REPORTED TO THE ENGINEER.

2. THE CONTRACTOR SHALL CALL DIG-SAFE 72 HOURS PRIOR TO CONSTRUCTION TO INFORM UTILITY COMPANIES OF ANY EXCAVATION ADJACENT TO EXISTING UTILITIES.

3. THE CONTRACTOR SHALL NOTIFY THE OWNER, UTILITY COMPANIES, POLICE, FIRE AND DPW PRIOR TO ANY BLASTING.

4. WHENEVER EXISTING STRUCTURES ARE ENCOUNTERED, THE CONTRACTOR SHALL REPAIR ANY DAMAGED STRUCTURES OR REPLACE ANY REMOVED STRUCTURES, AND MAKE ANY IMPROVEMENTS ABOVE OR BELOW GRADE TO A CONDITION BETTER THAN OR EQUAL TO EXISTING CONDITIONS.

5. THE CONTRACTOR SHALL BE RESPONSIBLE FOR DISPOSAL OF ALL WASTE MATERIAL AT AN APPROVED SITE. BURIAL OF WASTE MATERIAL ON-SITE IS NOT PERMITTED.

6. THE CONTRACTOR SHALL PROTECT ADJACENT PROPERTIES FROM ON-SITE CONSTRUCTION ACTIVITIES AND REMOVE ANY SEDIMENT OR DEBRIS DEPOSITED THEREON IMMEDIATELY.

7. DRAINAGE GENERATED AS A RESULT OF DEWATERING SHALL BE DISCHARGED TO EXISTING DRAINAGE COURSES WITH PROPER FILTRATION AND EROSION CONTROL MEASURES. DISCHARGE ONTO PAVEMENT OR PRIVATE PROPERTY SHALL NOT BE ALLOWED.

8. IF ANY PART OF THIS DESIGN IS TO BE ALTERED IN ANY WAY, THE ENGINEER AS WELL AS THE APPROVING AUTHORITIES SHALL BE NOTIFIED IN WRITING BEFORE CONSTRUCTION.

9. ONLY THOSE PLANS APPROVED BY THE CITY OF BEVERLY ARE TO BE USED FOR CONSTRUCTION.

10. GRANULAR FILL SHALL BE NON-PLASTIC, WITH LESS THAN 10% PASSING #200 SIEVE.

11. UNLESS OTHERWISE NOTED, COMPACT ALL LAYERS TO 95% MODIFIED PROCTOR.

12. ALL WATER, SEWER, AND DRAINAGE WORK SHALL COMPLY WITH THE CITY OF BEVERLY REQUIREMENTS. ALL WORK WITHIN 10' OF THE PROPOSED RESIDENCE TO CONFORM TO MASSACHUSETTS BUILDING CODE, AND ANY LOCAL BOARD OF HEALTH SUPPLEMENTARY REGULATIONS.

13. BUILDING WATER SERVICES TO BE SIZED BY FIRE SUPPRESSION SYSTEM DESIGNER.

14. THE CONTRACTOR SHALL BE RESPONSIBLE FOR HORIZONTAL AND VERTICAL CONTROL OF ALL SYSTEM COMPONENTS.

15. SAFETY MEASURES, DAY-TO-DAY CONTROL OF WORK AND CONSTRUCTION METHODS SHALL BE THE SOLE RESPONSIBILITY OF THE CONTRACTOR.

16. PLACE 4" LOAM AND SUNNY LAWN SEED MIXTURE (200 LB/ACRE), STARTER FERTILIZER, LIME AS REQUIRED, AND EROSION CONTROL BLANKET, WHERE NECESSARY, OVER ALL DISTURBED AREAS.

17. IN CASES WHERE LEDGE OR BOULDERS ARE PRESENT, THE ENGINEER WILL NOT BE RESPONSIBLE FOR ASSURING THE AMOUNT OF ROCK TO BE ENCOUNTERED.

18. CONTRACTOR TO PROVIDE INDIVIDUAL WATER, SEWER, GAS, ELECTRICAL, TELEPHONE, AND CABLE BUILDING SERVICES TO LOT LINE DURING THE CONSTRUCTION OF THE ROADWAY.

19. PROPOSED RESIDENCES, CLEARING LIMITS, ON-LOT UTILITIES AND GRADING ARE SHOWN FOR CONCEPTUAL PURPOSES ONLY.

20. PRIOR TO SITE WORK START-UP/DEMOLITION AND DURING SITE CONSTRUCTION, THE CONTRACTOR SHALL EMPLOY A LICENSED PEST CONTROL FIRM FOR SITE EVALUATION AND SERVICES. A COPY OF THE SERVICE PROGRAM IS TO BE SENT TO THE CITY OF BEVERLY HEALTH DEPARTMENT.

21. MAINTAIN ACCESS FROM WAY TO ABUTTING PROPERTIES THROUGHOUT THE WORK.

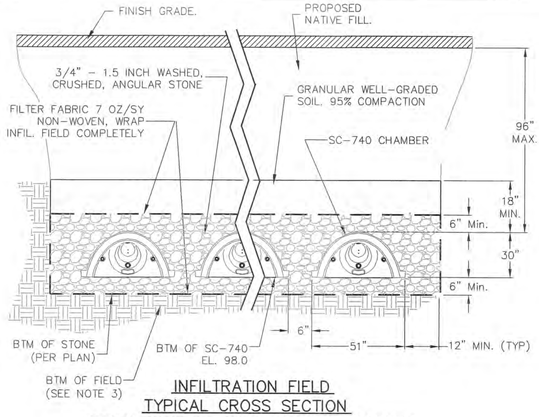

INFILTRATION FIELD
TYPICAL CROSS SECTION
STORMTECH SC-740 CHAMBER SYSTEM
N.T.S.

NOTES:
1) SEE SITE PLAN FOR FIELD SIZE, LOCATION AND CHAMBER COUNT.
2) MANUFACTURED BY STORMTECH OF 20 BEAVER ROAD, SUITE 104, WETHERSFIELD, CT 06109 USA 888-892-2694
3) CONTRACTOR TO REMOVE ANY TOPSOIL, SUBSOIL & URBAN FILL FROM BELOW THE INFILTRATION FIELD AND ESTABLISH BOTTOM OF FIELD GRADE WITH CLEAN SAND MEETING THE SPECIFICATIONS OF "TITLE 5" SAND.

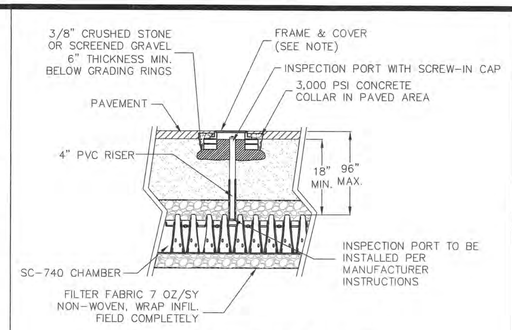

INSPECTION PORT DETAIL
N.T.S.

FRAME & COVER NOTE
IN PAVED AREA PROVIDE 8"ø CAST IRON FRAME & COVER (H20 RATED). SET ON 2 GRADING RINGS & MORTAR BED OR 2 COURSES BRICK AND MORTAR. PLACE CONCRETE COLLAR AROUND STRUCTURE.

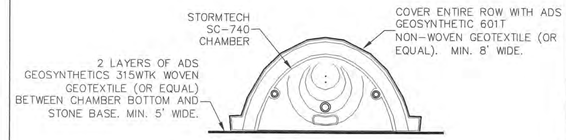

ISOLATOR ROW DETAIL
N.T.S.

NOTE:
SEE SITE PLAN FOR ISOLATOR ROW LOCATION(S)

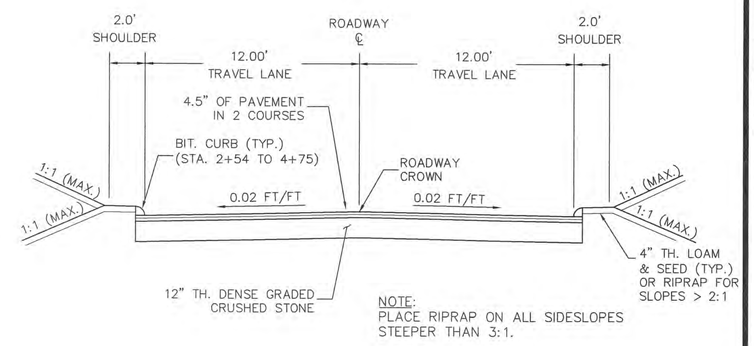

NOTE:
PLACE RIPRAP ON ALL SIDESLOPES STEEPER THAN 3:1.

TYPICAL ROADWAY SECTION
SCALE: 1"=4'

I CERTIFY THAT THIS PLAN WAS PREPARED IN ACCORDANCE WITH THE RULES AND REGULATIONS OF THE REGISTERS OF DEEDS.

_____ DATE

FOR REGISTRY USE ONLY

I, _____, CLERK OF THE CITY OF BEVERLY, MA, CERTIFY THAT THE NOTICE OF APPROVAL OF THIS PLAN BY THE BEVERLY PLANNING BOARD HAS BEEN RECEIVED AND RECORDED IN THIS OFFICE AND THAT NO APPEAL WAS RECEIVED DURING THE TWENTY (20) DAYS NEXT AFTER SUCH RECEIPT AND RECORDING OF SUCH NOTICE.

_____ BEVERLY CITY CLERK

_____ DATE

KEY:
1. 1½" CLASS 1 BIT. CONCRETE TOP COURSE TYPE I-1 (M3.11.0 -TABLE A).
2. 3" CLASS 1 BIT. CONCRETE BINDER COURSE (M3.11.0 - TABLE A).
3. 12" DENSE GRADED CRUSHED STONE FOR SUB-BASE (M2.01.7)
4. PREPARED SUBGRADE.

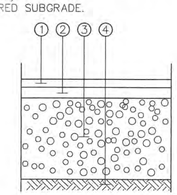

FULL DEPTH PAVEMENT
N.T.S.

NOTES:
1. REMOVE ALL LOAM, ROOTS, SUBSOIL AND DELETERIOUS MATERIALS.
2. COMPACT ALL LAYERS, AND SUBGRADE, TO 95% MOD. PROCTOR.
3. MATERIAL REFERENCES ARE TO 1995 EDITION OF MASS. HIGHWAY STANDARD SPECIFICATIONS FOR HIGHWAYS AND BRIDGES.
4. 4" LOAM, SEED AND MULCH ALL DISTURBED AREAS.
   LOAM = M 1.05.0
   SEED = M 6.03.0 SLOPE MIX
   MULCH = M 6.04.0 ANY TYPE
5. IN LEDGE, REMOVE LEDGE TO MIN. DEPTH OF 24" BELOW FINISH GRADE; BACKFILL WITH COMPACTED GRAVEL.

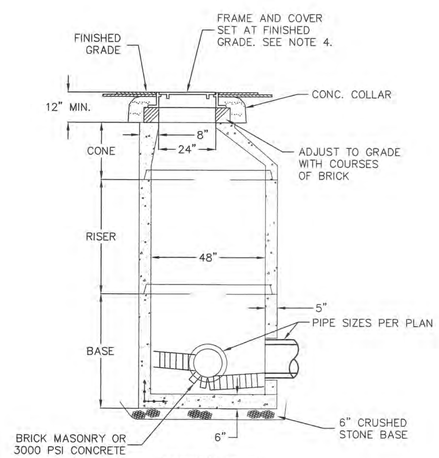

SECTION VIEW

NOTES:
1. CONCRETE 4,000 PSI MINIMUM AFTER 28 DAYS.
2. REINFORCED STEEL SHALL CONFORM TO LATEST ASTM A185 SPEC. 0.12 SQ. IN./LINEAL FT. AND 0.12 SQ. IN. (BOTH WAYS) BASE BOTTOM.
3. H-20 DESIGN LOADING.
4. EJCO 0MA124000023 FRAME & SOLID COVER 0MA124000026 (MARKED DRAIN) OR APPROVED EQUIVALENT.
5. SHEA PRECAST OR APPROVED EQUIVALENT.
6. TONGUE & GROOVE JOINTS SEALED WITH BUTYL RESIN. BUTYL RESIN.

PRECAST DRAIN MANHOLE
N.T.S.

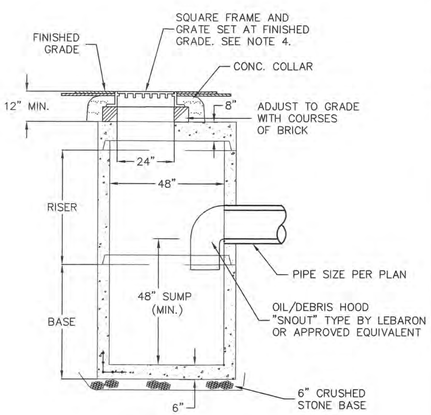

SECTION VIEW

NOTES:
1. CONCRETE 4,000 PSI MINIMUM AFTER 28 DAYS.
2. REINFORCED STEEL SHALL CONFORM TO LATEST ASTM A185 SPEC. 0.12 SQ. IN./LINEAL FT. AND 0.12 SQ. IN. (BOTH WAYS) BASE BOTTOM.
3. H-20 DESIGN LOADING.
4. EJCO 0MA552000029 FOUR FLANGE OR APPROVED EQUIVALENT.
5. SHEA PRECAST OR APPROVED EQUIVALENT.
6. TONGUE & GROOVE JOINTS SEALED WITH BUTYL RESIN. BUTYL RESIN.
7. FOUNDATION SUPPORT PER GEOTECHNICAL ENGINEER.

4'ø PRECAST CATCH BASIN
N.T.S.

CITY OF BEVERLY
PLANNING BOARD

DATE:

No.	Date	Description

Revisions

ROBERT H. GRIFFIN CIVIL #36686
COMMONWEALTH OF MASSACHUSETTS
PROFESSIONAL ENGINEER
7.13.20

Griffin Engineering Group, LLC
495 Cabot Street, 2nd Floor
Beverly, MA 01915
Tel: 978-927-5111
Fax: 978-927-5103

LIVINGSTONE AVENUE IMPROVEMENTS
BEVERLY, MA

DETAILS II

Scale: AS SHOWN
Job No.: 1754
File Name: p/p/b/m
Date: 7/13/20

C-4