SITE REDEVELOPMENT PLANS
MISSION BOATHOUSE RESTAURANT

1 WATER STREET
(ASSESSOR'S MAP 1, LOT 85)
BEVERLY, MASSACHUSETTS

SCHEDULE OF PLAN SET DRAWINGS:

C–1	COVER SHEET
C–2	CONTEXT PLAN
C–3	EXISTING CONDITIONS PLAN
C–4	SITE PREPARATION PLAN
C–5	SITE LAYOUT PLAN
C–6	GRADING & DRAINAGE PLAN
C–7	UTILITY PLAN
C–8	CONSTRUCTION DETAILS I
C–9	CONSTRUCTION DETAILS II
C–10	CONSTRUCTION DETAILS III
L1	SITE IMPROVEMENT PLANS
L2	MATERIALS PALETTE
L3	PLANTING PLAN
L4	LIGHTING PLAN

DATUM:

VERTICAL ELEVATIONS HEREON ARE BASED ON NAVD88. HORIZONTAL DATUM IS BASED ON MHLO 1992.

NOTES:

1. THESE PLANS ARE PREPARED FOR OUR CLIENTS USE ONLY FOR THE SPECIFIC PURPOSE OF OBTAINING PERMITS AND LOCAL APPROVALS, AND ARE NOT TO BE USED OR RELIED UPON AS A CONSTRUCTION DOCUMENT OR ANY OTHER USE BY OTHERS WITHOUT THE WRITTEN CONSENT OF THE MORIN–CAMERON GROUP, INC.

2. THE CONTRACTOR IS SPECIFICALLY CAUTIONED THAT THE LOCATION AND/OR ELEVATION OF EXISTING UTILITIES AND STRUCTURES AS SHOWN ON THESE PLANS IS BASED ON RECORDS OF VARIOUS UTILITY COMPANIES AND WHERE POSSIBLE, MEASUREMENTS TAKEN IN THE FIELD. THIS INFORMATION IS NOT TO BE RELIED UPON AS BEING EXACT OR COMPLETE. THE LOCATION OF ALL UNDERGROUND UTILITIES AND STRUCTURES SHALL BE VERIFIED IN THE FIELD BY THE CONTRACTOR PRIOR TO THE START OF CONSTRUCTION. THE CONTRACTOR MUST CONTACT THE APPROPRIATE UTILITY COMPANY, ANY GOVERNING PERMITTING AUTHORITY, AND "DIGSAFE" AT LEAST 72 HOURS PRIOR TO ANY EXCAVATION WORK TO REQUEST EXACT FIELD LOCATION OF UTILITIES AND THE ENGINEER SHALL BE NOTIFIED IN WRITING OF ANY UTILITIES INTERFERING WITH THE PROPOSED CONSTRUCTION AND APPROPRIATE REMEDIAL ACTION SHALL BE TAKEN BEFORE PROCEEDING WITH THE WORK. IT SHALL BE THE RESPONSIBILITY OF THE CONTRACTOR TO RELOCATE ALL EXISTING UTILITIES WHICH CONFLICT WITH THE PROPOSED IMPROVEMENTS SHOWN ON THE PLAN.

ZONE: BEVERLY HARBOR DISTRICT

ZONING TABLE

SETBACK	REQUIRED
FRONT	20 FT
SIDE	5 FT
REAR	20 FT (1)
FRONTAGE	NONE
LOT AREA	NONE
BUILDING HEIGHT	35' MAX. (2)
FLOOR AREA RATIO*	0.25

(1) MEASURED FROM THE CURRENT MEAN HIGH WATER MARK, OR THE PERIMETER OF ANY PIER, WHARF, OR OTHER STRUCTURE SUPPORTED BY EXISTING PILES, WHICHEVER IS FURTHER SEAWARD.
(2) VERTICAL DISTANCE FROM THE AVERAGE EXISTING STREET GRADE ALONG THE LOT TO THE TOP OF THE HIGHEST ROOF BEAMS OF A FLAT ROOF OR THE TOP OF THE HIGHEST RIDGE OF A SLOPED ROOF, EXCEPT THAT THERE MAY BE UNINHABITED SPACE UNDER A SLOPED ROOF UP TO A TOTAL HEIGHT OF 40 FT.
* SPECIAL PERMIT REQUIRED

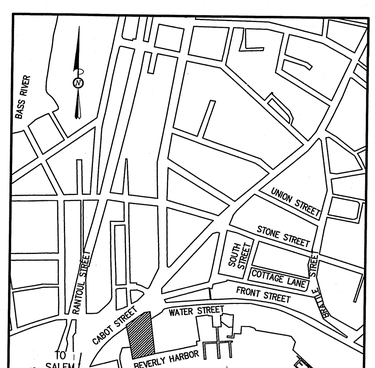

LOCUS:
1"=500'

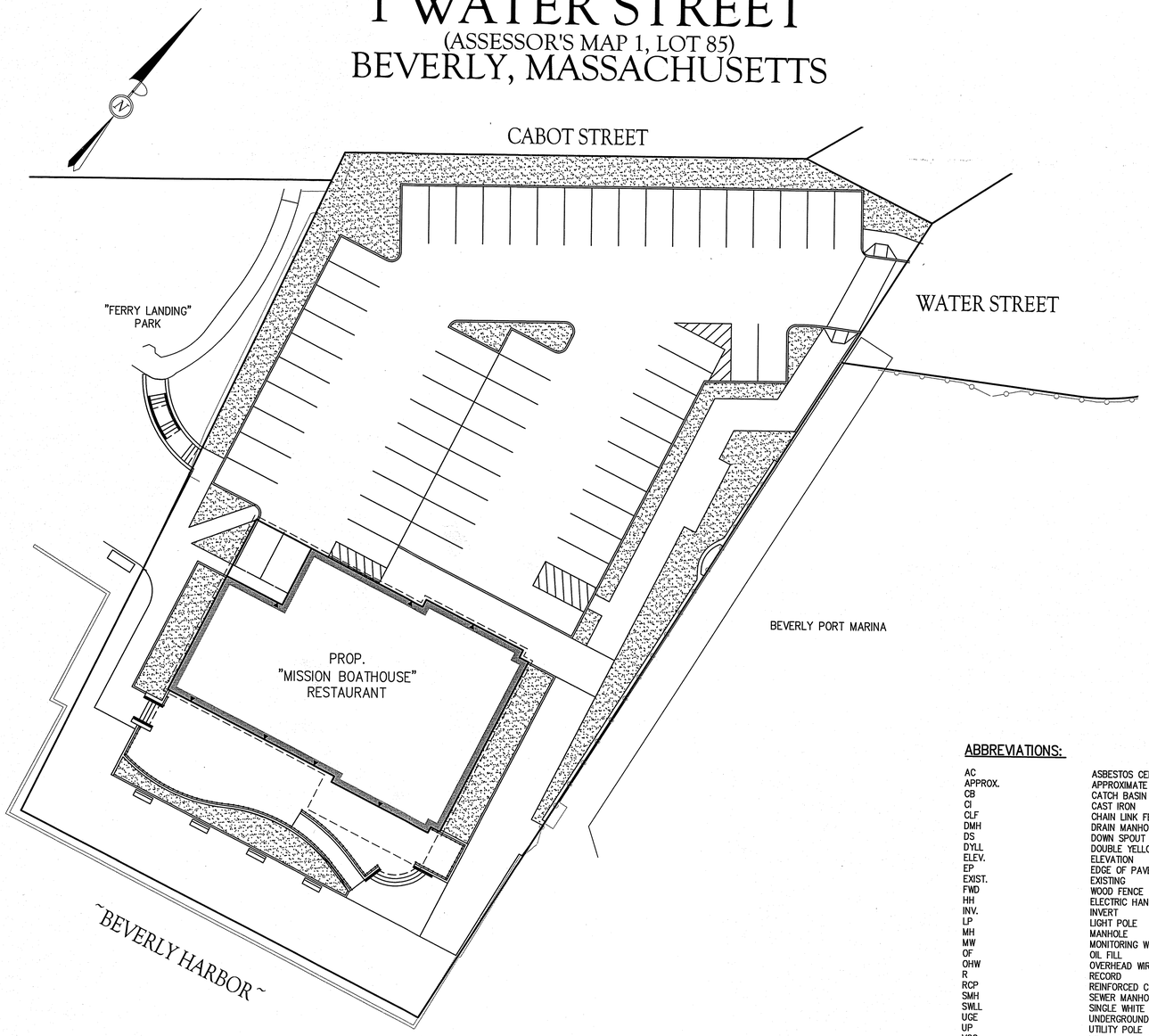

PLAN
SCALE: 1" = 20'
0 10 20 40

APPLICANT:
BEVERLY RESTAURANT ASSOCIATES
3 AVERY STREET, SUITE 6060
BOSTON MA 02111

BUILDING ARCHITECT:
BISBANO AND ASSOCIATES, INC
188 VALLEY STREET
PROVIDENCE, RHODE ISLAND 02909
PHONE: 401–404–8310

CIVIL ENGINEER AND SURVEYOR:
THE MORIN–CAMERON GROUP, INC.
66 ELM STREET
DANVERS, MA 01923
PHONE: 978–777–8586

ENVIRONMENTAL CONSULTANT:
LEC ENVIRONMENTAL CONSULTANTS, INC.
380 LOWELL STREET
WAKEFIELD, MA 01880
PHONE: 781–245–2500

LANDSCAPE ARCHITECT:
RADNER DESIGN ASSOCIATES, INC.
945 CONCORD STREET, SUITE 100
FRAMINGHAM, MA 01701
PHONE: 508–736–6144

CURRENT OWNERSHIP:
CITY OF BEVERLY
1 WATER STREET
DEED BOOK 13634 PAGE 510
ASSESSOR'S MAP 1 LOT 85

ABBREVIATIONS:

AC	ASBESTOS CEMENT
APPROX.	APPROXIMATE
CB	CATCH BASIN
CI	CAST IRON
CLF	CHAIN LINK FENCE
DMH	DRAIN MANHOLE
DS	DOWN SPOUT
DYLL	DOUBLE YELLOW LANE LINE
ELEV.	ELEVATION
EP	EDGE OF PAVEMENT
EXIST.	EXISTING
FWD	WOOD FENCE
HH	ELECTRIC HAND HOLD
INV.	INVERT
LP	LIGHT POLE
MH	MANHOLE
MW	MONITORING WELL
OF	OIL FILL
OHW	OVERHEAD WIRE
R	RECORD
RCP	REINFORCED CONCRETE PIPE
SMH	SEWER MANHOLE
SWLL	SINGLE WHITE LANE LINE
UGE	UNDERGROUND ELECTRIC
UP	UTILITY POLE
VGC	VERTICAL GRANITE CURB

LEGEND:

	CATCH BASIN
D	DRAIN LINE
D	DRAIN MANHOLE
	EGRESS/INGRESS
E	ELECTRIC MANHOLE
	FEMA LINE
GG	GAS GATE
G	GAS LINE
	GUY
	LIGHT POLE
	MAJOR CONTOURS
	MINOR CONTOURS
OHW	OVERHEAD WIRES
S	SEWER LINE
S	SEWER MANHOLE
	SIGN
	TREE
UGE	UNDERGROUND ELECTRIC LINE
	UTILITY POLE
WG	WATER GATE
W	WATER LINE
	WOOD FENCE
	TREE

ISSUED FOR PERMITTING

© THE MORIN–CAMERON GROUP, INC. 2019

The Morin-Cameron GROUP, INC.
CIVIL ENGINEERS | ENVIRONMENTAL CONSULTANTS
LAND SURVEYORS | LAND USE PLANNERS
66 ELM STREET, DANVERS, MASSACHUSETTS 01923
P: 978-777-8586, F: 978-774-3488, W: WWW.MORINCAMERON.COM

COMMONWEALTH OF MASSACHUSETTS SCOTT P. CAMERON No. 42361 REGISTERED PROFESSIONAL ENGINEER 9-12-19

SURVEY BY: CSI SURVEY, INC
DRAFTED BY: ABR
CHECKED BY: SPC
APPROVED BY: SPC
SCALE: 1"=20'
DATE: AUGUST 12, 2019

REVISIONS

NO.	DESCRIPTION	DATE

SITE REDEVELOPMENT PLANS
MISSION BOATHOUSE RESTAURANT
IN
BEVERLY, MASSACHUSETTS
1 WATER STREET
(ASSESSOR'S MAP 1, LOT 85)
PREPARED FOR:
BEVERLY RESTAURANT ASSOCIATES, LLC

COVER SHEET

DRAWING NO. C–1

PROJ. #3743

The Morin-Cameron GROUP, INC.
CIVIL ENGINEERS | ENVIRONMENTAL CONSULTANTS
LAND SURVEYORS | LAND USE PLANNERS
65 ELM STREET, DANVERS, MASSACHUSETTS 01923
P: 978-777-3586, F: 978-774-3486, W: WWW.MORINCAMERON.COM

COMMONWEALTH OF MASSACHUSETTS
SCOTT D. CAMERON
CIVIL
No. 46604
REGISTERED PROFESSIONAL ENGINEER
8-12-19

SURVEY BY: CSI SURVEY, INC
DRAFTED BY: ABR
CHECKED BY: SPC
APPROVED BY: SPC
SCALE: 1"=20'
DATE: AUGUST 12, 2019

REVISIONS		
NO.	DESCRIPTION	DATE

SITE REDEVELOPMENT PLANS
MISSION BOATHOUSE RESTAURANT
IN
BEVERLY, MASSACHUSETTS
1 WATER STREET
(ASSESSOR'S MAP 1, LOT 85)
PREPARED FOR:
BEVERLY RESTAURANT ASSOCIATES, LLC

CONTEXT PLAN

DRAWING NO. C-2

© THE MORIN-CAMERON GROUP, INC. 2019

PROJ. #3743

LEGEND:

- CATCH BASIN
- DRAIN LINE
- DRAIN MANHOLE
- EGRESS/INGRESS
- ELECTRIC MANHOLE
- FEMA LINE
- GAS GATE
- GAS LINE
- GUY
- LIGHT POLE
- MAJOR CONTOURS
- MINOR CONTOURS
- OVERHEAD WIRES
- SEWER LINE
- SEWER MANHOLE
- SIGN
- TREE
- UNDERGROUND ELECTRIC LINE
- UTILITY POLE
- WATER GATE
- WATER LINE
- WOOD FENCE
- TREE

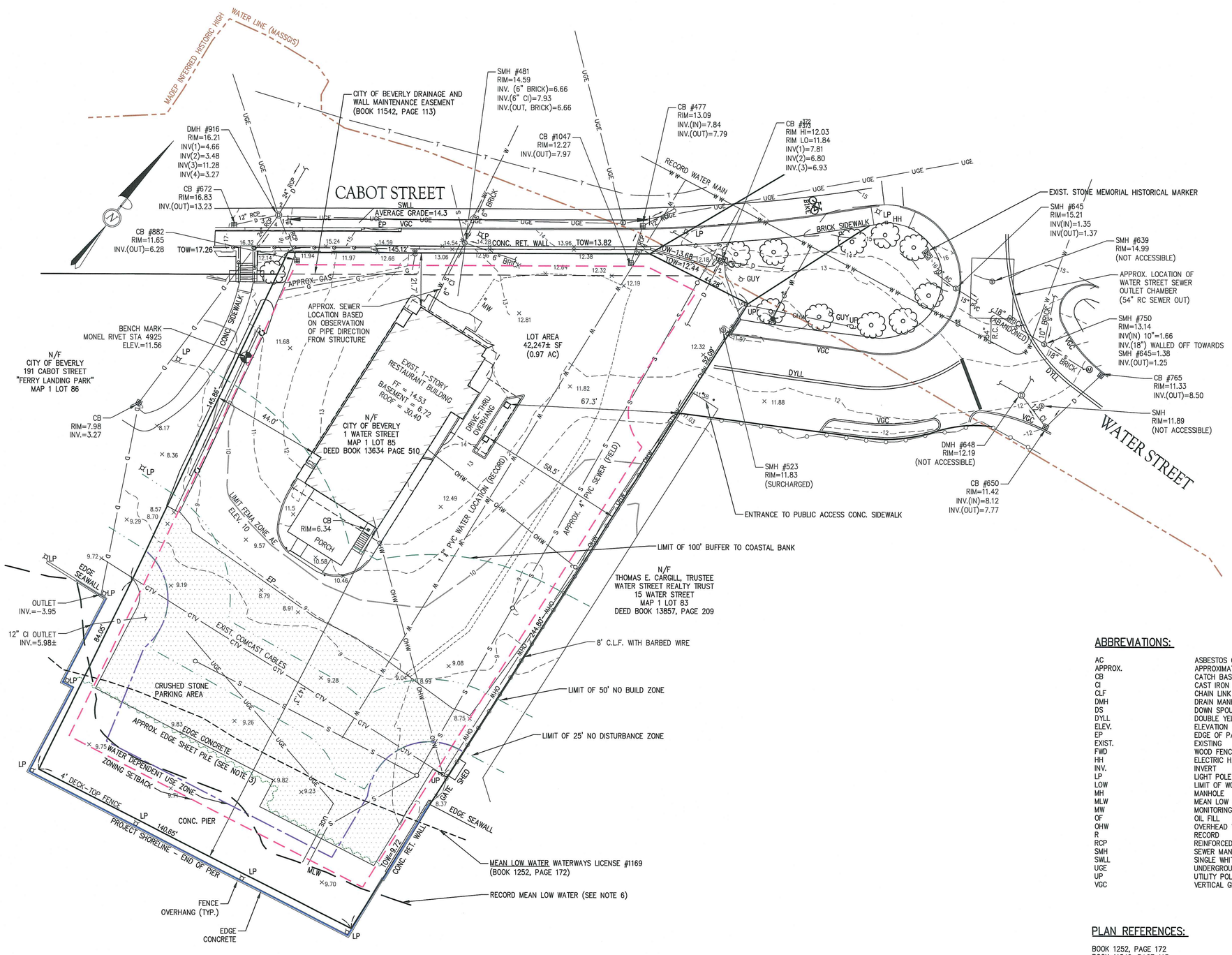

PLAN
SCALE: 1" = 20'
0 10 20 40

DATUM:

VERTICAL ELEVATIONS HEREON ARE BASED ON NAVD88. HORIZONTAL DATUM IS BASED ON MHLO 1992.

NOTES:

1. THE EXISTING CONDITIONS DEPICTED HEREON ARE THE RESULT OF AN ON-THE-GROUND INSTRUMENT SURVEY PERFORMED BY THE MORIN-CAMERON GROUP, INC. IN APRIL 2019.
2. THE CONTRACTOR IS SPECIFICALLY CAUTIONED THAT THE LOCATION AND/OR ELEVATION OF EXISTING UTILITIES AND STRUCTURES AS SHOWN ON THESE PLANS IS BASED ON RECORDS OF VARIOUS UTILITY COMPANIES AND WHERE POSSIBLE, MEASUREMENTS TAKEN IN THE FIELD. THIS INFORMATION IS NOT TO BE RELIED UPON AS BEING EXACT OR COMPLETE. THE LOCATION OF ALL UNDERGROUND UTILITIES AND STRUCTURES SHALL BE VERIFIED IN THE FIELD BY THE CONTRACTOR PRIOR TO THE START OF CONSTRUCTION. THE CONTRACTOR MUST CONTACT THE APPROPRIATE UTILITY COMPANY, ANY GOVERNING PERMITTING AUTHORITY, AND "DIGSAFE" AT LEAST 72 HOURS PRIOR TO ANY EXCAVATION WORK TO REQUEST EXACT FIELD LOCATION OF UTILITIES AND THE ENGINEER SHALL BE NOTIFIED IN WRITING OF ANY UTILITIES INTERFERING WITH THE PROPOSED CONSTRUCTION AND APPROPRIATE REMEDIAL ACTION SHALL BE TAKEN BEFORE PROCEEDING WITH THE WORK. IT SHALL BE THE RESPONSIBILITY OF THE CONTRACTOR TO RELOCATE ALL EXISTING UTILITIES WHICH CONFLICT WITH THE PROPOSED IMPROVEMENTS SHOWN ON THE PLAN.
3. SHEET PILE LOCATIONS COMPILED FROM "OVERALL WORK PLAN GLOVERS WHARF IMPROVEMENT WATER STREET BEVERLY, MASSACHUSETTS" DATED OCTOBER 6, 2009 BY VINE ASSOCIATES, INC.
4. OBSERVED HIGH TIDE ELEVATION: 5.4; 12 PM 4-19-19.
5. MARKED MEAN HIGH WATER ELEVATION ON BOLLARD: 6.1 4-18-19.
6. MEAN LOW WATER LINE COMPILED FROM PLAN ENTITLED "PLAN OF LAND PROPERTY OF THE CITY OF BEVERLY SITUATED ON CABOT & WATER STREETS BEVERLY, MASSACHUSETTS" DATED NOVEMBER 29, 2006 BY GERALD RALPH MARSELLA.

ABBREVIATIONS:

AC	ASBESTOS CEMENT
APPROX.	APPROXIMATE
CB	CATCH BASIN
CI	CAST IRON
CLF	CHAIN LINK FENCE
DMH	DRAIN MANHOLE
DS	DOWN SPOUT
DYLL	DOUBLE YELLOW LANE LINE
ELEV.	ELEVATION
EP	EDGE OF PAVEMENT
EXIST.	EXISTING
FWD	WOOD FENCE
HH	ELECTRIC HAND HOLD
INV.	INVERT
LP	LIGHT POLE
LOW	LIMIT OF WORK
MH	MANHOLE
MLW	MEAN LOW WATER
MW	MONITORING WELL
OF	OIL FILL
OHW	OVERHEAD WIRE
R	RECORD
RCP	REINFORCED CONCRETE PIPE
SMH	SEWER MANHOLE
SWLL	SINGLE WHITE LANE LINE
UGE	UNDERGROUND ELECTRIC
UP	UTILITY POLE
VGC	VERTICAL GRANITE CURB

PLAN REFERENCES:

BOOK 1252, PAGE 172
BOOK 11542, PAGE 113
BOOK 11542, PAGE 109
BOOK 922, PAGE 275
BOOK 1252, PAGE 173
BOOK 1256, PAGE 272
BOOK 2081, PAGE 189
BOOK 1255, PAGE 560
BOOK 11542, PAGE 99

ISSUED FOR PERMITTING

The Morin-Cameron GROUP, INC.
CIVIL ENGINEERS | ENVIRONMENTAL CONSULTANTS
LAND SURVEYORS | LAND USE PLANNERS
16 ELM STREET, DANVERS, MASSACHUSETTS 01923
P: 978-777-3050, F: 978-774-5860, W: WWW.MORIN-CAMERON.COM

COMMONWEALTH OF MASSACHUSETTS PROFESSIONAL ENGINEER SCOTT P. CAMERON No. 47661 REGISTERED PROFESSIONAL ENGINEER
8-12-19

SURVEY BY: CSI SURVEY, INC
DRAFTED BY: ABR
CHECKED BY: SPC
APPROVED BY: SPC
SCALE: 1"=20'
DATE: AUGUST 12, 2019

NO.	REVISIONS DESCRIPTION	DATE

SITE REDEVELOPMENT PLANS
MISSION BOATHOUSE RESTAURANT
IN
BEVERLY, MASSACHUSETTS
1 WATER STREET
(ASSESSOR'S MAP 1, LOT 85)
PREPARED FOR:
BEVERLY RESTAURANT ASSOCIATES, LLC

EXISTING CONDITIONS PLAN
DRAWING NO. C-3

© THE MORIN-CAMERON GROUP, INC. 2019

PROJ. #3743

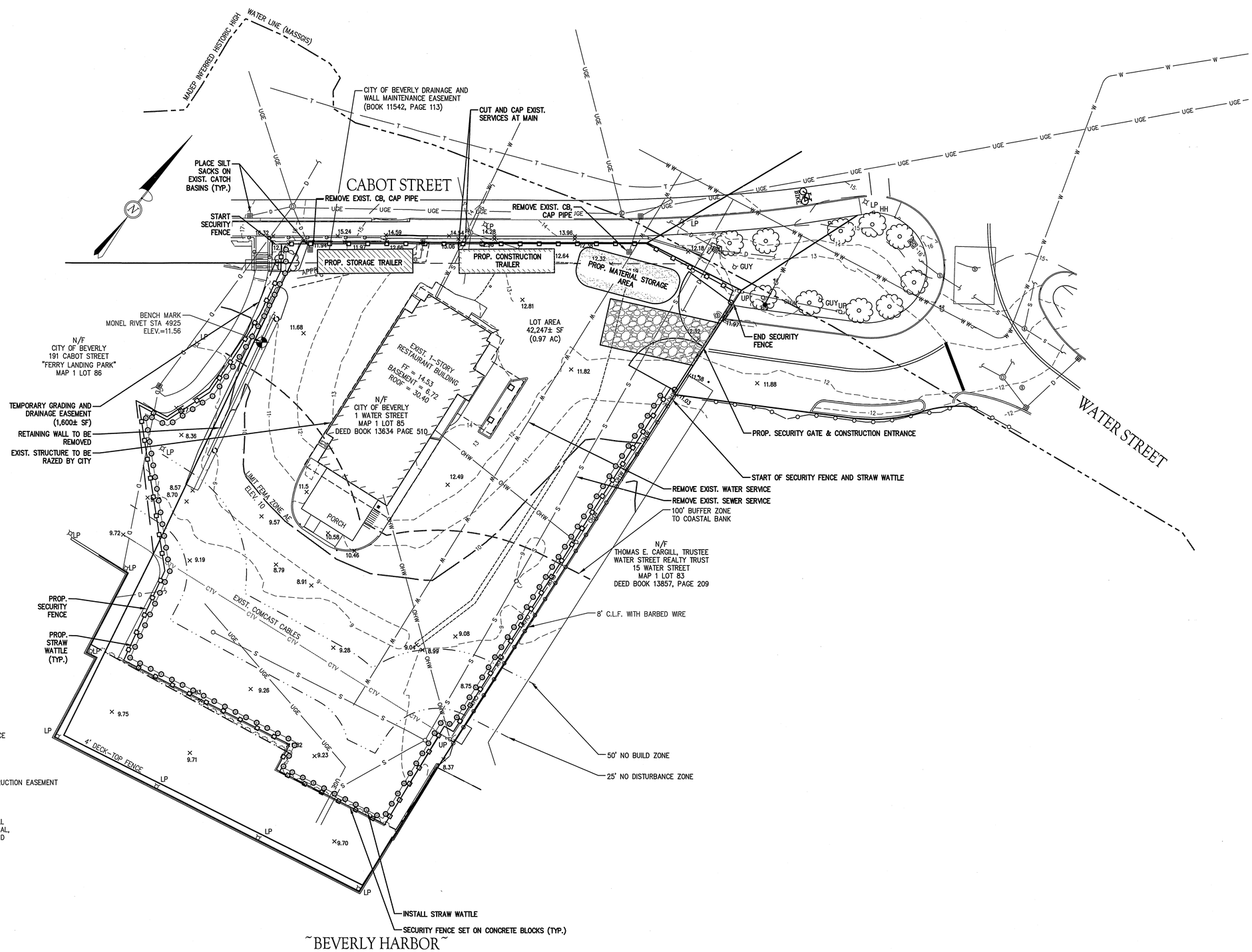

LEGEND:

- CONSTRUCTION FENCE
- STRAW WATTLE
- PROPERTY LINE
- TEMPORARY CONSTRUCTION EASEMENT

DEMOLITION NOTES:

1. ALL MATERIALS REMOVED FROM THE PREMISES SHALL BE DONE SO IN ACCORDANCE WITH APPLICABLE LOCAL, STATE AND FEDERAL REGULATIONS FOR HAULING AND DISPOSAL.
2. COORDINATE ANY UTILITY DIS-CONNECTIONS WITH APPROPRIATE SERVICE PROVIDERS.

ISSUED FOR PERMITTING

The Morin-Cameron GROUP, INC.
CIVIL ENGINEERS | ENVIRONMENTAL CONSULTANTS
LAND SURVEYORS | LAND USE PLANNERS
83 WALNUT STREET, PEABODY, MASSACHUSETTS 01960
P: 978-777-6386, F: 978-774-3488, W: WWW.MORINCAMERON.COM

COMMONWEALTH OF MASSACHUSETTS — SCOTT P. CAMERON — No. 47861 — REGISTERED PROFESSIONAL ENGINEER — 8-12-19

SURVEY BY: CSI SURVEY, INC
DRAFTED BY: ABR
CHECKED BY: SPC
APPROVED BY: SPC
SCALE: 1"=20'
DATE: AUGUST 12, 2019

REVISIONS

NO.	DESCRIPTION	DATE

SITE REDEVELOPMENT PLANS
MISSION BOATHOUSE RESTAURANT
IN
BEVERLY, MASSACHUSETTS
1 WATER STREET
(ASSESSOR'S MAP 1, LOT 85)
PREPARED FOR:
BEVERLY RESTAURANT ASSOCIATES, LLC

SITE PREPARATION PLAN

DRAWING NO. C-4

© THE MORIN-CAMERON GROUP, INC. 2019

PROJ. #3743

PARKING TABLE:

REQUIRED PARKING: 350 SEAT RESTAURANT
1 SPACE PER 4 SEATS 350/4 = 88 SPACES REQUIRED

PROVIDED PARKING:

1 WATER STREET: 60 SPACES
11 CABOT STREET: 48 SPACES (OFFSITE)
12 CABOT STREET: 16 SPACES (OFFSITE)
TOTAL: 124 SPACES PROVIDED

LOT COVERAGE CALCULATIONS:

REF: 310 CMR 9: WATERWAYS REGULATIONS

BUILDING AREA (INCLUDING ROOF/AWNING):	6,686 SF (15.83%)
PARKING AREA:	17,379 SF (41.13%)
OPEN SPACE AREA:	18,182 SF (43.04%)
TOTAL LOT AREA:	42,247 SF

PIER AND BULKHEAD NOTE:

ALL WORK ABOVE AND NEAR EXISTING PILE SUPPORTED PIER AND SHEET PILE BULKHEAD SHALL BE REVIEWED AND CERTIFIED BY A REGISTERED PROFESSIONAL STRUCTURAL ENGINEER.

PARKING NOTE:

DESIGNATIONS FOR PARKING RESTRICTIONS TO BE VERIFIED BY CITY OF BEVERLY. RESTRICTIONS NOTED HEREON ARE INTENDED TO GENERALLY DESCRIBE THE RESTRICTIONS ANTICIPATED BY THE APPLICANT TO ACCOMMODATE THE PROPOSED USE.

SURFACE FINISHING NOTE:

REFER TO SHEET L1: SITE IMPROVEMENTS PLAN AND L2: MATERIALS PALETTE FOR SURFACE TYPES AND MATERIALS.

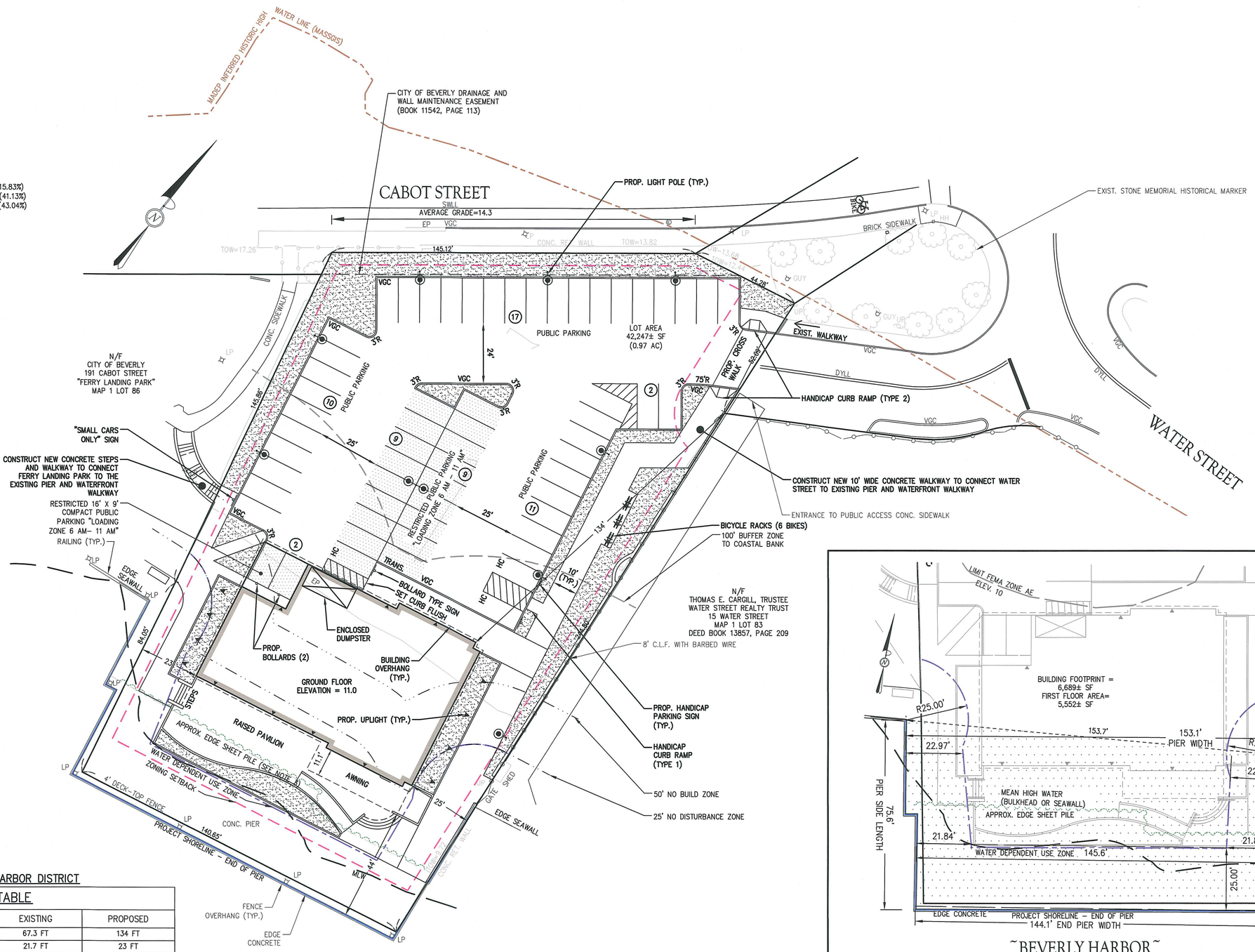

ZONE: BEVERLY HARBOR DISTRICT

ZONING TABLE

SETBACK	REQUIRED	EXISTING	PROPOSED
FRONT	20 FT	67.3 FT	134 FT
SIDE	5 FT	21.7 FT	23 FT
REAR	20 FT (1)	147.3 FT	44 FT
FRONTAGE	NONE	52.09 FT (WATER STREET)	NO CHANGE
LOT AREA	NONE	42,247± SF	NO CHANGE
BUILDING HEIGHT	35' MAX. (2)	16.1 FT	35 FT
FLOOR AREA RATIO*	0.25	0.075	0.45*

(1) MEASURED FROM THE CURRENT MEAN HIGH WATER MARK, OR THE PERIMETER OF ANY PIER, WHARF, OR OTHER STRUCTURE SUPPORTED BY EXISTING PILES, WHICHEVER IS FURTHER SEAWARD.
(2) VERTICAL DISTANCE FROM THE AVERAGE EXISTING STREET GRADE ALONG THE LOT TO THE TOP OF THE HIGHEST ROOF BEAMS OF A FLAT ROOF OR THE TOP OF THE HIGHEST RIDGE OF A SLOPED ROOF, EXCEPT THAT THERE MAY BE UNINHABITED SPACE UNDER A SLOPED ROOF UP TO A TOTAL HEIGHT OF 40 FT.
* SPECIAL PERMIT REQUIRED

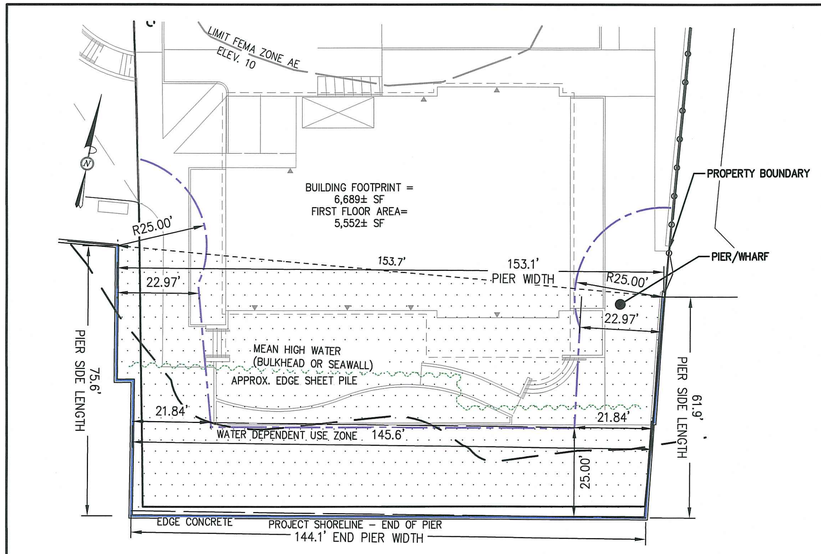

WATER DEPENDENT USE ZONE CALCULATIONS:

(1) END PIER, 25% OF DISTANCE FROM END TO BASE OF PIER, OR 25' MINIMUM.
75.6' * 0.25 = 18.9' → 25'. (MINIMUM REQUIREMENT)

(2) SIDE PIER, 15% OF DISTANCE FROM EDGES OR 15' MINIMUM.
145.6' * 0.15 = 21.84'
153.1' * 0.15 = 22.97'

REFERENCE:
(1) 310 CMR 9.51(3)(c).2
(2) 310 CMR 9.51(3)(c).3

ISSUED FOR PERMITTING

The Morin-Cameron GROUP, INC.
CIVIL ENGINEERS | ENVIRONMENTAL CONSULTANTS
LAND SURVEYORS | LAND USE PLANNERS
86 BLUE HILL DRIVE, P.O. BOX 1031, NEWBURYPORT, MA 01950
P: 978-777-8586, F: 978-774-3486, W: WWW.MORINCAMERON.COM

COMMONWEALTH OF MASSACHUSETTS REGISTERED PROFESSIONAL ENGINEER SCOTT P. CAMERON CIVIL No. 47601 8-12-19

SURVEY BY: CSI SURVEY, INC
DRAFTED BY: ABR
CHECKED BY: SPC
APPROVED BY: SPC
SCALE: 1"=20'
DATE: AUGUST 12, 2019

NO.	DESCRIPTION	DATE

REVISIONS

SITE REDEVELOPMENT PLANS
MISSION BOATHOUSE RESTAURANT
IN
BEVERLY, MASSACHUSETTS
1 WATER STREET
(ASSESSOR'S MAP 1, LOT 85)
PREPARED FOR:
BEVERLY RESTAURANT ASSOCIATES, LLC

SITE LAYOUT PLAN

DRAWING NO. C-5

© THE MORIN-CAMERON GROUP, INC. 2019

PROJ. #3743

STORM MANAGEMENT SYSTEM NOTES:

1. STORMWATER CONVEYANCE PIPES SHALL BE REINFORCED CONCRETE PIPE UNLESS NOTED OTHERWISE.
2. BACKFILL SHALL BE COMPACTED TO 95% MAXIMUM DRY DENSITY BY AASHTO T-180D METHOD.
3. SHEETING, IF USED, SHALL BE REMOVED PRIOR TO BACKFILLING TRENCH.
4. UNSUITABLE SOIL (CLAY, ORGANICS, DEBRIS, ETC) BELOW THE INVERT SHALL BE REMOVED AND REPLACED WITH APPROVED MATERIAL AND SHALL NOT BE USED AS BACKFILL.
5. ROOF DRAINS SHALL BE DIRECTED TO THE DRAINAGE SYSTEM IN THE LOCATIONS SHOW. COORDINATE LOCATIONS WITH THE PROJECT ARCHITECT AND LANDSCAPE ARCHITECT.

GRADING NOTES:

1. ALL HANDICAP PARKING SPACES SHALL HAVE A MAXIMUM OF 1.8% SLOPE IN ANY DIRECTION.
2. ACCESSIBLE ROUTES SHALL COMPLY WITH 521 CMR MASSACHUSETTS ARCHITECTURAL ACCESS BOARD REQUIREMENTS.
3. ALL GRADES SHALL BE VERIFIED BY THE SITE CONTRACTOR PRIOR TO FINAL PAVING. THE CIVIL ENGINEER SHALL BE NOTIFIED OF ANY CONFLICTS OR DISCREPANCIES.

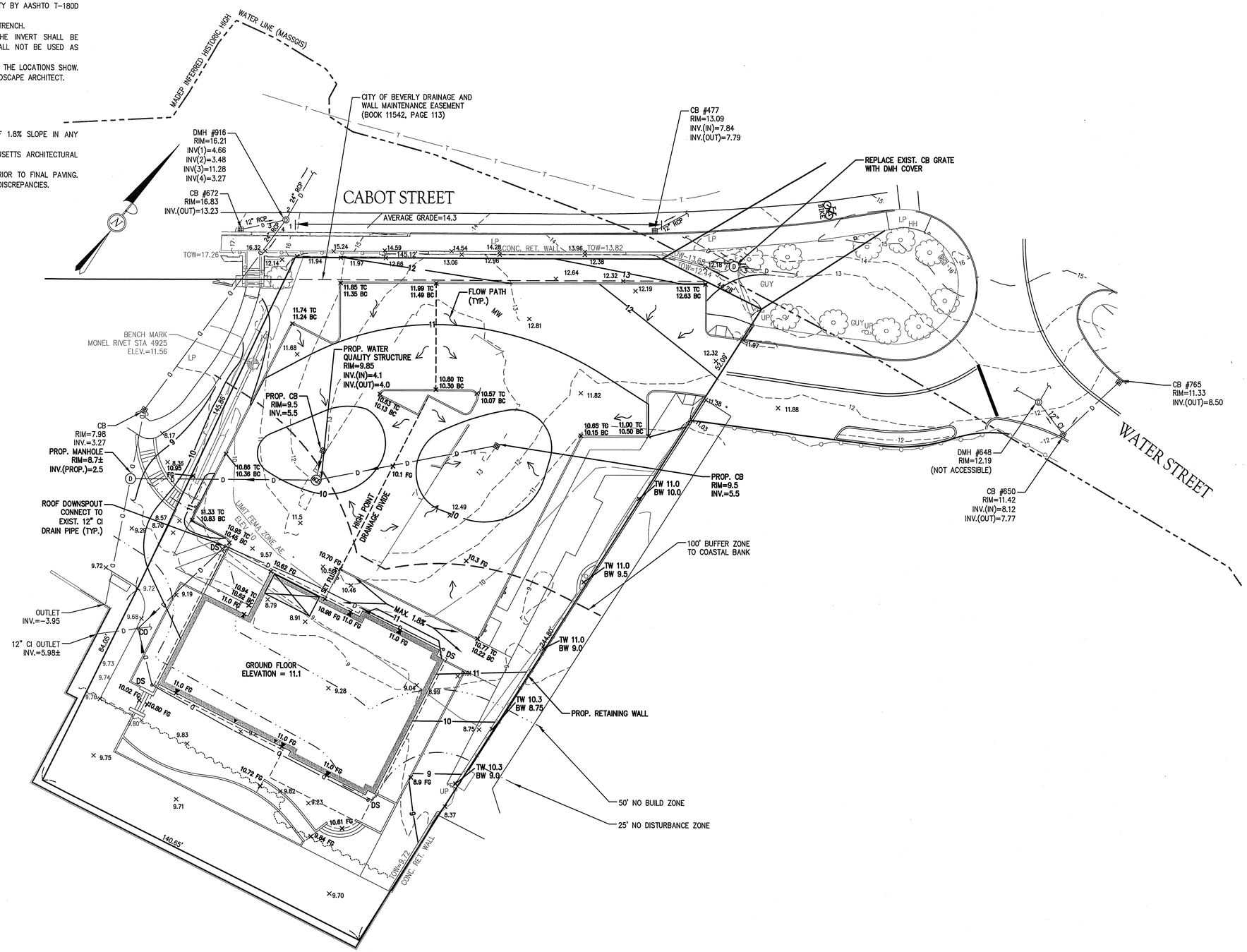

PLAN
SCALE: 1" = 20'
0 10 20 40

ISSUED FOR PERMITTING

The Morin-Cameron GROUP, INC.
CIVIL ENGINEERS | ENVIRONMENTAL CONSULTANTS
LAND SURVEYORS | LAND USE PLANNERS
96 HIGH STREET, BEVERLY, MASSACHUSETTS 01915
P: 978-773-5856, F: 978-774-3488, W: WWW.MORINCAMERON.COM

COMMONWEALTH OF MASSACHUSETTS SCOTT D. CAMERON CIVIL No. 47061 REGISTERED PROFESSIONAL ENGINEER 8-12-19

SURVEY BY: CSI SURVEY, INC
DRAFTED BY: ABR
CHECKED BY: SPC
APPROVED BY: SPC
SCALE: 1"=20'
DATE: AUGUST 12, 2019

REVISIONS		
NO.	DESCRIPTION	DATE

SITE REDEVELOPMENT PLANS
MISSION BOATHOUSE RESTAURANT
IN
BEVERLY, MASSACHUSETTS
1 WATER STREET
(ASSESSOR'S MAP 1, LOT 85)
PREPARED FOR:
BEVERLY RESTAURANT ASSOCIATES, LLC

GRADING AND DRAINAGE PLAN

DRAWING NO. C-6

© THE MORIN-CAMERON GROUP, INC. 2019

PROJ. #3743

GENERAL UTILITY NOTES:

1. THE CONTRACTOR IS SPECIFICALLY CAUTIONED THAT THE LOCATION AND/OR ELEVATION OF EXISTING UTILITIES AND STRUCTURES AS SHOWN ON THESE PLANS IS BASED ON RECORDS OF VARIOUS UTILITY COMPANIES AND WHERE POSSIBLE, MEASUREMENTS TAKEN IN THE FIELD. THIS INFORMATION IS NOT TO BE RELIED UPON AS BEING EXACT OR COMPLETE. THE LOCATION OF ALL UNDERGROUND UTILITIES AND STRUCTURES SHALL BE VERIFIED IN THE FIELD BY THE CONTRACTOR PRIOR TO THE START OF CONSTRUCTION. THE CONTRACTOR MUST CONTACT THE APPROPRIATE UTILITY COMPANY, ANY GOVERNING PERMITTING AUTHORITY, AND "DIGSAFE" AT LEAST 72 HOURS PRIOR TO ANY EXCAVATION WORK TO REQUEST EXACT FIELD LOCATION OF UTILITIES AND THE ENGINEER SHALL BE NOTIFIED IN WRITING OF ANY UTILITIES INTERFERING WITH THE PROPOSED CONSTRUCTION AND APPROPRIATE REMEDIAL ACTION SHALL BE TAKEN BEFORE PROCEEDING WITH THE WORK. IT SHALL BE THE RESPONSIBILITY OF THE CONTRACTOR TO RELOCATE ALL EXISTING UTILITIES WHICH CONFLICT WITH THE PROPOSED IMPROVEMENTS SHOWN ON THE PLAN.
2. EXISTING UTILITY LOCATIONS SHOULD BE CONSIDERED APPROXIMATE AND SHALL BE VERIFIED BY THE CONTRACTOR PRIOR TO CONSTRUCTION.
3. ALL UTILITY SERVICE SIZE AND LOCATIONS SHALL BE CONFIRMED BY THE PROJECT MEP ENGINEER PRIOR TO CONSTRUCTION.
4. THE CONTRACTOR SHALL BE RESPONSIBLE FOR ESTABLISHING AND MAINTAINING ALL CONTROL POINTS AND BENCHMARKS NECESSARY FOR THE WORK.
5. CONTRACTOR TO COORDINATE ELECTRIC SERVICE, SIZE OF TRANSFORMER AND LOCATION WITH NATIONAL GRID.
6. THE PROPOSED CABLE AND TELEPHONE SERVICE LOCATIONS ARE NOT ILLUSTRATED ON THIS PLAN. THE CONTRACTOR SHALL COORDINATE WITH THE CABLE AND TELEPHONE COMPANIES TO VERIFY THE LOCATION, SIZE AND TYPE OF SAID UTILITIES PRIOR TO CONSTRUCTION. THE CONTRACTOR SHALL GIVE SAID UTILITY COMPANIES ADVANCE NOTICE OF WHEN THE UTILITY LINES WILL BE INSTALLED.

WATER AND SEWER NOTES:

1. PROPOSED WATER AND SEWER SERVICE CONNECTIONS SHALL BE COORDINATED WITH THE BEVERLY PUBLIC SERVICES DEPARTMENT.
2. A MINIMUM OF 10 FEET CLEAR HORIZONTAL SEPARATION SHALL BE MAINTAINED BETWEEN SANITARY SEWER PIPES AND WATER PIPES UNLESS CONDITIONS PREVENT A LATERAL SEPARATION OF 10 FEET, IN WHICH CASE THE CONTRACTOR SHALL CONFORM TO NOTE NO. 4 BELOW.
3. ALL GRAVITY SEWER PIPE SHALL BE POLYVINYL CHLORIDE (PVC) SDR-35 UNLESS OTHERWISE NOTED.
4. WHERE SANITARY SEWERS CROSS WATER SERVICES OR A MINIMUM OF 10 FEET LATERAL SEPARATION CANNOT BE ACHIEVED, THE SEWER SHALL BE LAID AT SUCH AN ELEVATION THAT THE CROWN OF THE SEWER IS AT LEAST 18 INCHES BELOW THE INVERT OF THE WATER PIPE. IF THE ELEVATION OF THE SEWER CANNOT BE VARIED TO MEET THIS REQUIREMENT, THE WATER PIPE SHALL BE RELOCATED TO PROVIDE THIS SEPARATION OR CONSTRUCTED WITH MECHANICAL-JOINT PIPE FOR A DISTANCE OF 10 FEET ON EACH SIDE OF THE SEWER. ONE FULL LENGTH OF WATER PIPE SHALL BE CENTERED OVER THE SEWER SO THAT BOTH JOINTS WILL BE AS FAR FROM THE SEWER AS POSSIBLE. WHENEVER IT IS IMPOSSIBLE TO OBTAIN VERTICAL SEPARATION AS STIPULATED ABOVE, BOTH THE WATER PIPE AND THE SEWER PIPE SHALL BE ENCASED IN CONCRETE FOR A MINIMUM DISTANCE OF 10 FEET FROM THE CROSSING POINT OF THE OTHER PIPE AS MEASURED NORMALLY FROM ALL POINTS ALONG THE PIPE.
5. ALL WATER SERVICES SHALL BE INSTALLED WITH A MINIMUM OF 5' OF COVER.
6. INSTALL THRUST BLOCKS OR APPROVED EQUIVALENT JOINT RESTRAINTS AT ALL WATER MAIN BENDS.
7. THE EXISTING SEWER AND WATER SERVICES ABANDONED DURING CONSTRUCTION SHALL BE CUT AND CAPPED AT THE MAIN.
8. FIRE SERVICE FITTINGS SHALL CONFORM TO AWWA C100-71.

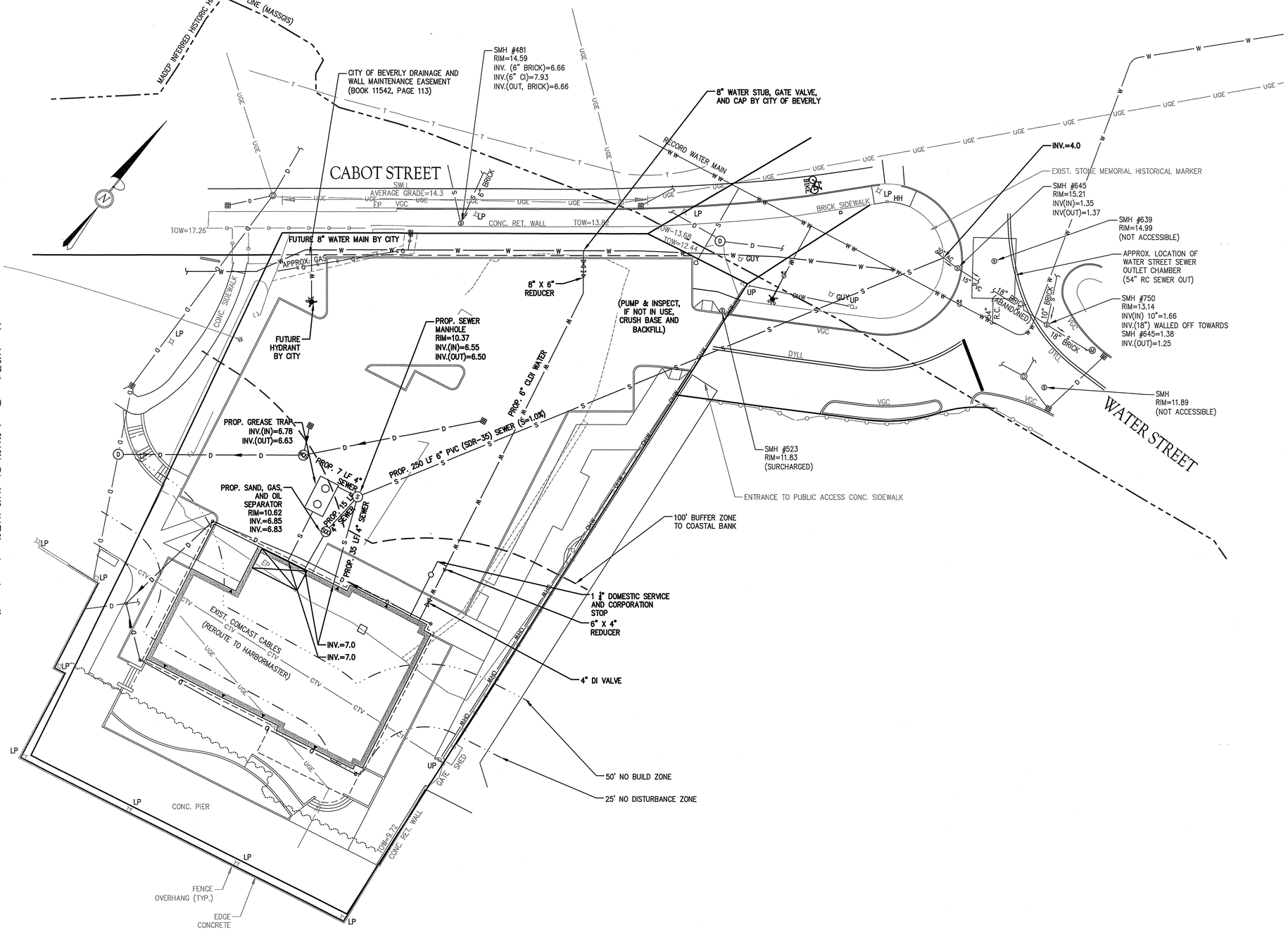

PLAN
SCALE: 1" = 20'
0 10 20 40

ISSUED FOR PERMITTING

The Morin-Cameron GROUP, INC.
CIVIL ENGINEERS | ENVIRONMENTAL CONSULTANTS
LAND SURVEYORS | LAND USE PLANNERS
66 ELM STREET, DANVERS, MASSACHUSETTS 01923
P: 978-777-8586, F: 978-774-3488, W: WWW.MORINCAMERON.COM

COMMONWEALTH OF MASSACHUSETTS SCOTT P. CAMERON CIVIL No. 47851 Registered Professional Engineer
9-12-19

SURVEY BY: CSI SURVEY, INC
DRAFTED BY: ABR
CHECKED BY: SPC
APPROVED BY: SPC
SCALE: 1"=20'
DATE: AUGUST 12, 2019

REVISIONS		
NO.	DESCRIPTION	DATE

SITE REDEVELOPMENT PLANS
MISSION BOATHOUSE RESTAURANT
IN
BEVERLY, MASSACHUSETTS
1 WATER STREET
(ASSESSOR'S MAP 1, LOT 85)
PREPARED FOR:
BEVERLY RESTAURANT ASSOCIATES, LLC

UTILITY PLAN

DRAWING NO. C-7

© THE MORIN-CAMERON GROUP, INC. 2019

PROJ. #3743

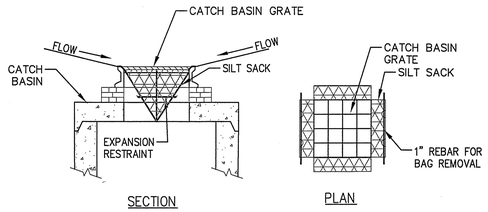

NOTES:
1. INSTALL SILT SACKS IN EXISTING CATCH BASINS. INSTALL SILT SACKS IN NEW CATCH BASINS AFTER INSTALLATION.
2. GRATES TO BE PLACED OVER SILT SACKS.
3. SILTSACK SHALL BE INSPECTED PERIODICALLY AND AFTER ALL STORM EVENTS AND CLEANING OR REPLACEMENT SHALL BE PERFORMED WHEN DEPTH OF SEDIMENT IS WITHIN 6" OF GRATE.

SILT SACK SEDIMENT TRAP
NOT TO SCALE

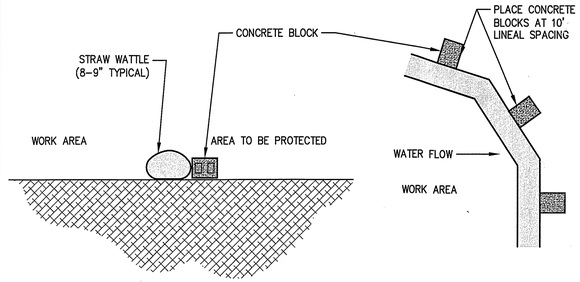

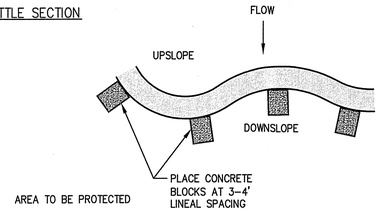

STRAW WATTLE PLAN VIEW

STRAW WATTLE ON PAVEMENT
NOT TO SCALE

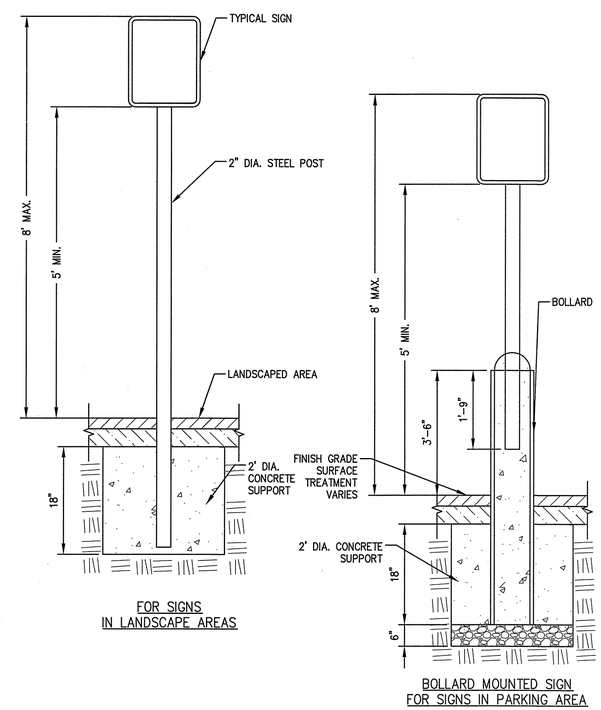

SIGN POST
NOT TO SCALE

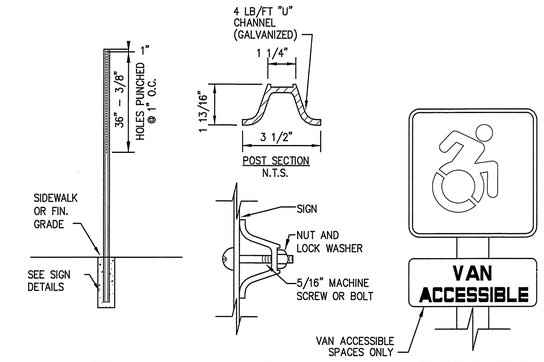

ACCESSIBLE PARKING SPACE SIGN
NOT TO SCALE

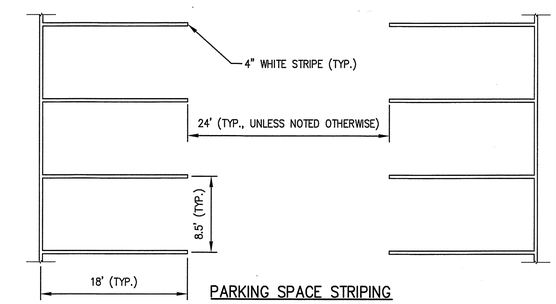

PARKING SPACE STRIPING
NOT TO SCALE

CONSTRUCTION ENTRANCE SPECIFICATIONS FOR 505 SUTTON STREET

1. STONE FOR STABILIZATION CONSTRUCTION ENTRANCE SHALL BE 2–4" STONE, RECLAIMED STONE.
2. THE LENGTH OF THE STABILIZED ENTRANCE SHALL NOT BE LESS THAN 40 FEET.
3. THE WIDTH OF THE ENTRANCE SHALL BE NO LESS THAN THE WIDTH OF THE INGRESS OR EGRESS DRIVE, OR 16 FEET, WHICHEVER IS GREATER.
4. GEOTEXTILE FILTER FABRIC SHALL BE PLACED OVER THE ENTIRE AREA PRIOR TO PLACING STONE.
5. ALL SURFACE WATER THAT IS FLOWING TO OR DIVERTED TOWARDS THE CONSTRUCTION ENTRANCE SHALL BE PIPED BENEATH THE ENTRANCE. IF PIPING IS IMPRACTICAL, A BERM WITH MINIMUM 1 TO 5 SLOPES THAT CAN BE CROSSED BY VEHICLES CAN BE SUBSTITUTED.
6. THE ENTRANCE SHALL BE MAINTAINED IN A CONDITION THAT WILL PREVENT TRACKING OR FLOWING OF SEDIMENT ONTO RIGHTS OF WAY. THIS MAY REQUIRE PERIODIC TOPDRESSING WITH ADDITIONAL STONE AS CONDITIONS DEMAND AND REPAIR AND/OR CLEANOUT OF ANY MEASURES USED TO TRAP SEDIMENT. SEDIMENT SPILLED, WASHED OR TRACKED ONTO THE RIGHT OF WAY MUST BE REMOVED IMMEDIATELY.

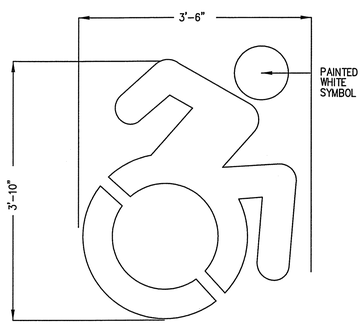

ACCESSIBILITY SYMBOL
NOT TO SCALE

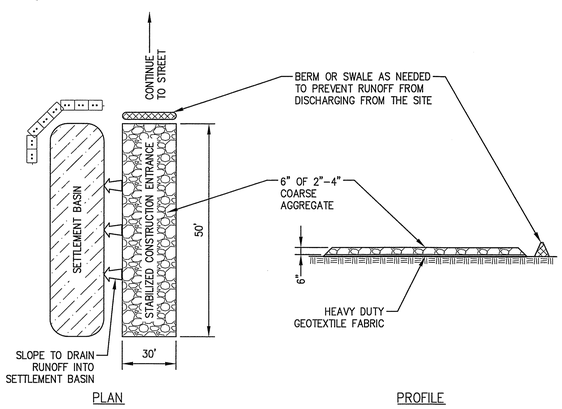

STABILIZED CONSTRUCTION ENTRANCE DETAIL
NOT TO SCALE

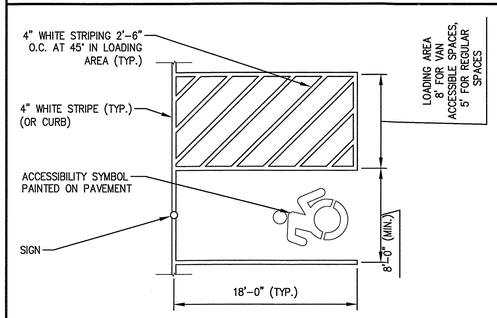

ACCESSIBLE PARKING SPACE
NOT TO SCALE

NOTE:

PAVEMENT MAX SLOPE 2% IN ALL DIRECTIONS.

NOTES:

1. THE MAXIMUM ALLOWABLE SIDEWALK AND CURB RAMP CROSS SLOPES SHALL BE 1.5% (1% MIN.).
2. THE MAXIMUM ALLOWABLE SLOPE OF ACCESSIBLE ROUTE EXCLUDING CURB RAMPS SHALL BE 5%.
3. THE MAXIMUM ALLOWABLE SLOPE OF ACCESSIBLE ROUTE CURB RAMPS SHALL BE 7.5%.
4. A MINIMUM OF 3 FEET CLEAR SHALL BE MAINTAINED AT ANY PERMANENT OBSTACLE IN ACCESSIBLE ROUTE (I.E., HYDRANTS, UTILITY POLES, TREE WELLS, SIGNS, ETC.)
5. CURB TREATMENT VARIES, SEE PLANS FOR CURB TYPE.
6. BASE OF RAMP SHALL BE GRADED TO PREVENT PONDING.
7. SEE TYPICAL SIDEWALK SECTION FOR RAMP CONSTRUCTION.
8. WHERE ACCESSIBLE ROUTES ARE LESS THAN 5' IN WIDTH (EXCLUDING CURBING) A 5' x 5' PASSING AREA SHALL BE PROVIDED AT INTERVALS NOT TO EXCEED 200 FEET.
9. ELIMINATE ALL CURBING AT RAMP (OTHER THAN VERTICAL CURBING, WHICH SHALL BE SET FLUSH) WHERE IT ABUTS ROADWAY.

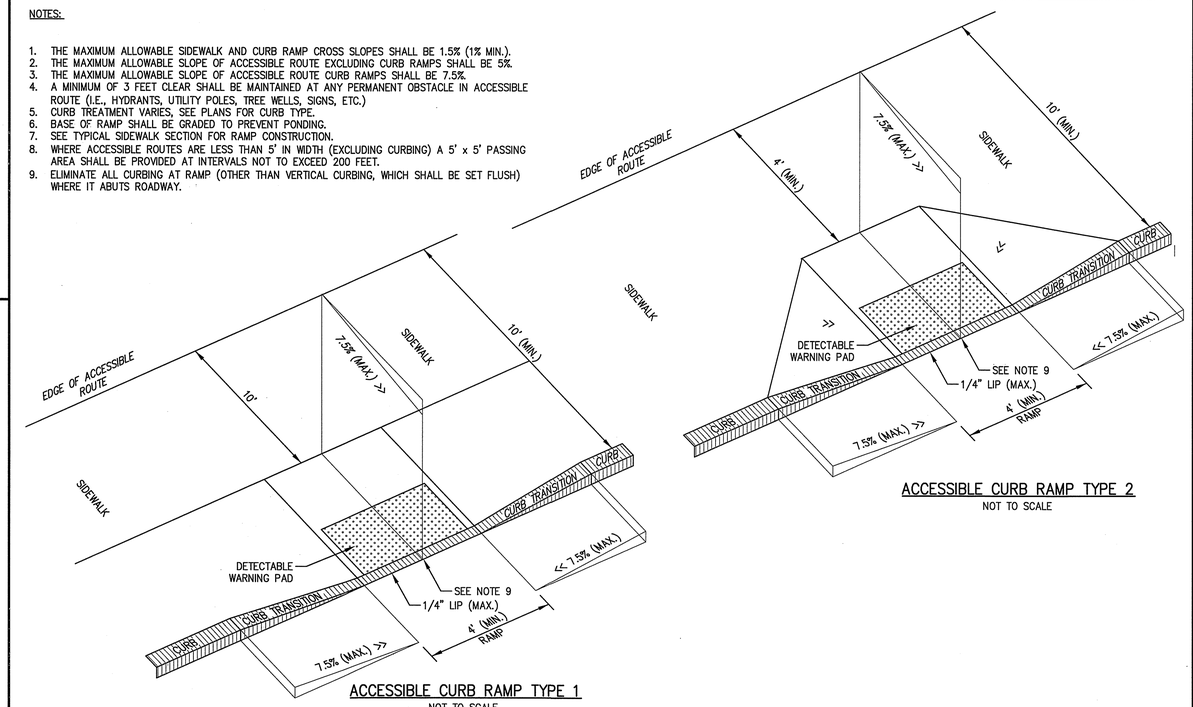

ACCESSIBLE CURB RAMP TYPE 1
NOT TO SCALE

ACCESSIBLE CURB RAMP TYPE 2
NOT TO SCALE

ISSUED FOR PERMITTING

The Morin-Cameron GROUP, INC.
CIVIL ENGINEERS | ENVIRONMENTAL CONSULTANTS
LAND SURVEYORS | LAND USE PLANNERS
66 ELM STREET, DANVERS, MASSACHUSETTS 01923
P: 978-777-8586, F: 978-774-3488, W: WWW.MORINCAMERON.COM

COMMONWEALTH OF MASSACHUSETTS SCOTT P. CAMERON CIVIL No. 47667 REGISTERED PROFESSIONAL ENGINEER 8-12-19

SURVEY BY: CSI SURVEY, INC
DRAFTED BY: ABR
CHECKED BY: SPC
APPROVED BY: SPC
SCALE: 1"=20'
DATE: AUGUST 12, 2019

REVISIONS		
NO.	DESCRIPTION	DATE

SITE REDEVELOPMENT PLANS
MISSION BOATHOUSE RESTAURANT
IN
BEVERLY, MASSACHUSETTS
1 WATER STREET
(ASSESSOR'S MAP 1, LOT 85)
PREPARED FOR:
BEVERLY RESTAURANT ASSOCIATES, LLC

CONSTRUCTION DETAILS I

DRAWING NO. C-8

© THE MORIN–CAMERON GROUP, INC. 2019

PROJ. #3743

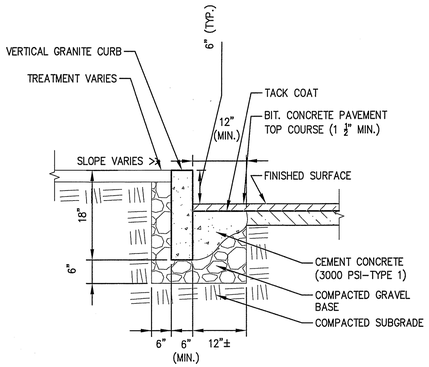

VERTICAL GRANITE CURB (VGC)

NOT TO SCALE

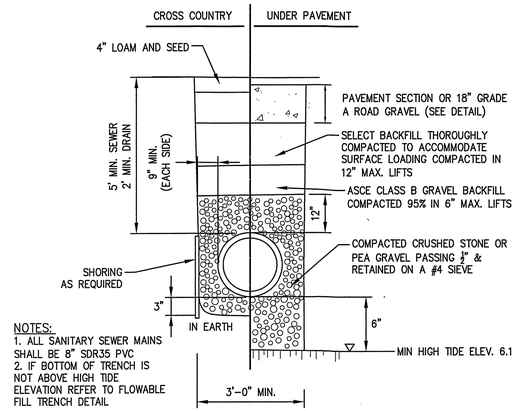

NOTES:
1. ALL SANITARY SEWER MAINS SHALL BE 8" SDR35 PVC
2. IF BOTTOM OF TRENCH IS NOT ABOVE HIGH TIDE ELEVATION REFER TO FLOWABLE FILL TRENCH DETAIL

TYPICAL SEWER/DRAIN TRENCH DETAIL

(NOT TO SCALE)

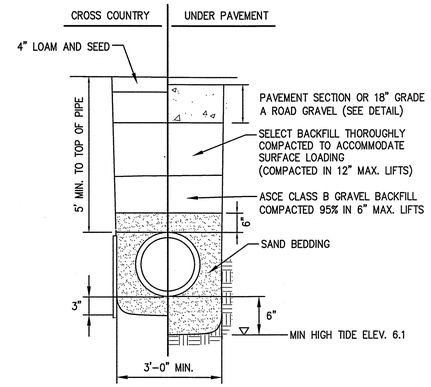

TYPICAL WATER TRENCH DETAIL

(NOT TO SCALE)

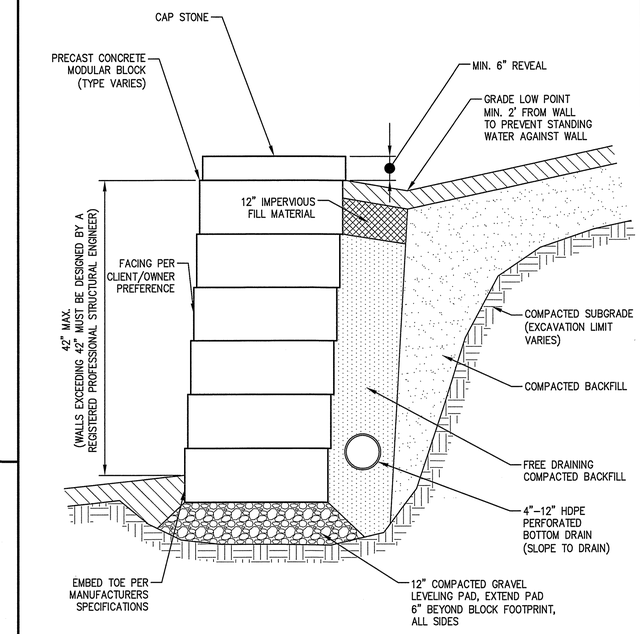

NOTES:
1. THIS MODULAR BLOCK RETAINING WALL DETAIL FOR DEMONSTRATIONAL PURPOSES ONLY. REFER TO MANUFACTURERS RECOMMENDED INSTALLATION PROCEDURES.
2. PRECAST CONCRETE MODULAR BLOCK UNIT DIMENSIONS, COLOR AND FACING CAN VARY PER CLIENT/OWNER PREFERENCE.
3. BOTTOM DRAIN SHALL DAYLIGHT AND/OR WEEP HOLES SHALL BE PROVIDED AT THE TOE OF FINISHED GRADE. THE INSTALLER SHALL TAKE CARE TO STABILIZE THE BOTTOM DRAIN DISCHARGE POINT TO PREVENT EROSION.
4. BOTTOM DRAIN SIZE SHALL BE DETERMINED IN THE FIELD BASED ON ANTICIPATED GROUNDWATER/SURFACE WATER CONDITIONS TO ENSURE ADEQUATE CAPACITY.

TYPICAL MODULAR BLOCK RETAINING WALL

NOT TO SCALE

NOTES:
1. PROVIDE EXPANSION JOINTS AT MIN. 30 FT. O.C. WITH PRE-MOULDED JOINT FILLER.
2. PROVIDE CONTROL JOINTS AR 6' O.C.
3. PROVIDE BROOM FINISH IN DIRECTION PERPENDICULAR TO CURB.
4. CEMENT CONCRETE SHALL BE 4,000 PSI-TYPE II.

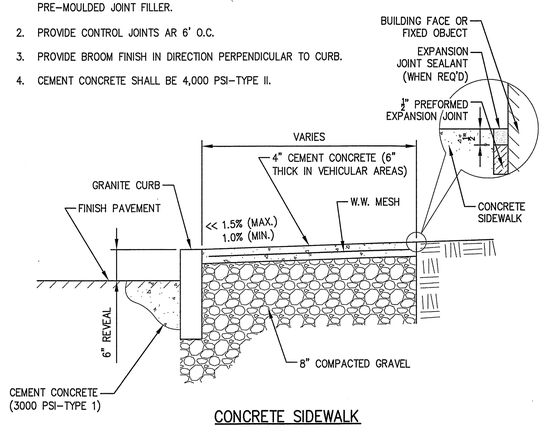

CONCRETE SIDEWALK

NOT TO SCALE

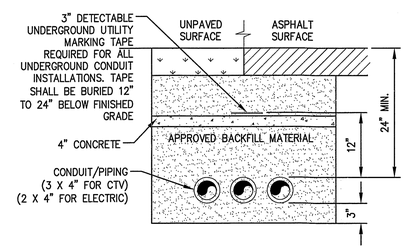

ELECTRICAL CONDUIT TRENCH DETAIL NOTES:
1. ADJUST FOR ANY LOCAL MODIFICATIONS TO NFPA 70/NEC
2. COORDINATE CONDUITS WITH APPLICABLE SERVICE PROVIDERS.

TELEPHONE, CABLE, FIBER AND ELECTRICAL CONDUIT TRENCH DETAIL

NOT TO SCALE

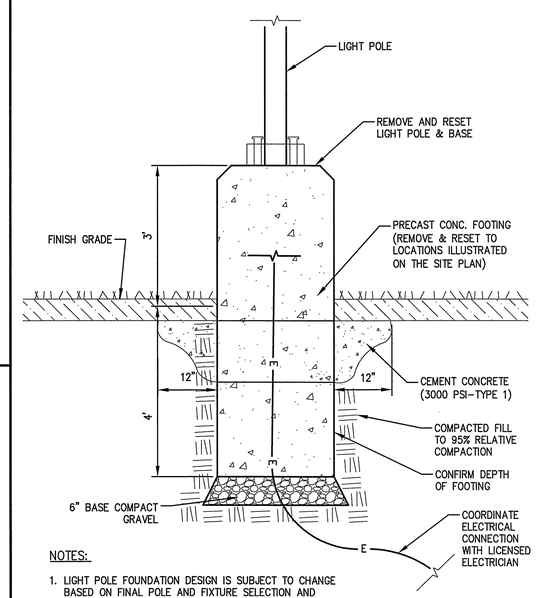

NOTES:
1. LIGHT POLE FOUNDATION DESIGN IS SUBJECT TO CHANGE BASED ON FINAL POLE AND FIXTURE SELECTION AND GEOTECHNICAL SITE INVESTIGATION.

LIGHT POLE DETAIL

NOT TO SCALE

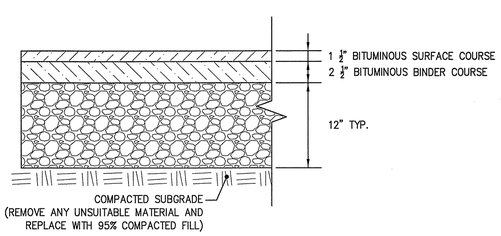

PAVING NOTE:
1. PAVEMENT SHALL BE TYPE 1, CLASS 1 BITUMINOUS CONCRETE.
2. PAVEMENT THICKNESS AFTER ROLLING.

PAVEMENT DETAIL

(NOT TO SCALE)

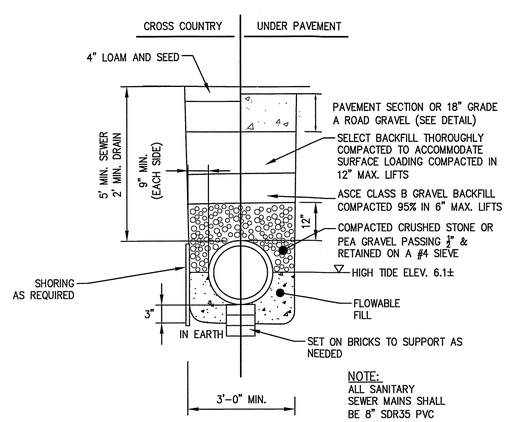

NOTE:
ALL SANITARY SEWER MAINS SHALL BE 8" SDR35 PVC

FLOWABLE FILL TRENCH DETAIL

(NOT TO SCALE)

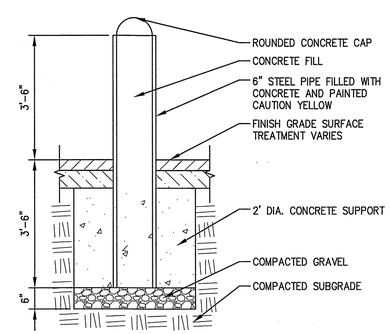

BOLLARD

NOT TO SCALE

ISSUED FOR PERMITTING

The Morin-Cameron GROUP, INC.
CIVIL ENGINEERS | ENVIRONMENTAL CONSULTANTS
LAND SURVEYORS | LAND USE PLANNERS
66 ELM STREET, DANVERS, MASSACHUSETTS 01923
P: 978-777-8586, F: 978-774-3485, W: WWW.MORINCAMERON.COM

COMMONWEALTH OF MASSACHUSETTS SCOTT A. CAMERON CIVIL No. 47884 REGISTERED PROFESSIONAL ENGINEER 9-12-19

SURVEY BY: CSI SURVEY, INC
DRAFTED BY: ABR
CHECKED BY: SPC
APPROVED BY: SPC
SCALE: 1"=20'
DATE: AUGUST 12, 2019

REVISIONS		
NO.	DESCRIPTION	DATE

SITE REDEVELOPMENT PLANS
MISSION BOATHOUSE RESTAURANT
IN
BEVERLY, MASSACHUSETTS
1 WATER STREET
(ASSESSOR'S MAP 1, LOT 85)
PREPARED FOR:
BEVERLY RESTAURANT ASSOCIATES, LLC

CONSTRUCTION DETAILS II

DRAWING NO. C-9

© THE MORIN-CAMERON GROUP, INC. 2019

PROJ. #3743

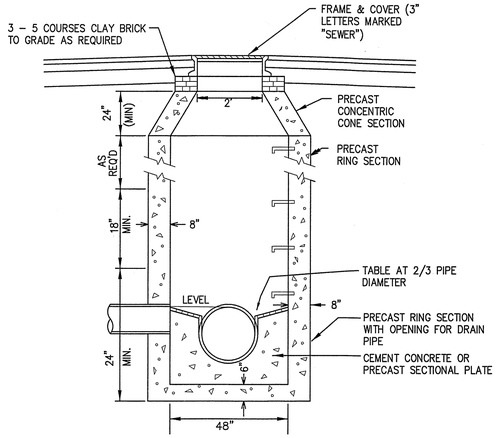

(NOTE: OUTLET INVERT IS A MINIMUM 0.10' LOWER THAN INLET INVERT)

TYPICAL SEWER MANHOLE

NOT TO SCALE

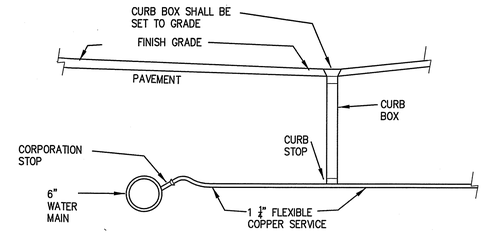

NOTES:

1. EXISTING WATER SERVICE SHALL BE SHUT OFF AT EXISTING CURB STOP AND SERVICE LINE CUT AND CAPPED JUST BEYOND CURB STOP.
2. TAP EXISTING WATER MAIN WITH NEW CORPORATION STOP AND INSTALL NEW CURB STOP AND CURB BOX WITHIN EXISTING SIDEWALK
3. SAW CUT EXISTING PAVEMENT AND SIDEWALK TO MINIMIZE REPAIRS. REPLACE ASPHALT PAVEMENT AND CONCRETE SIDEWALK TO MATCH EXISTING ELEVATIONS.

WATER SERVICE CORPORATION

NOT TO SCALE

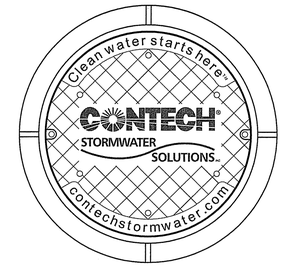

FRAME AND COVER
(DIAMETER VARIES)

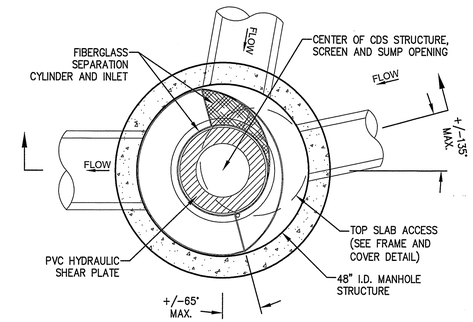

PLAN VIEW B–B
(NOT TO SCALE)

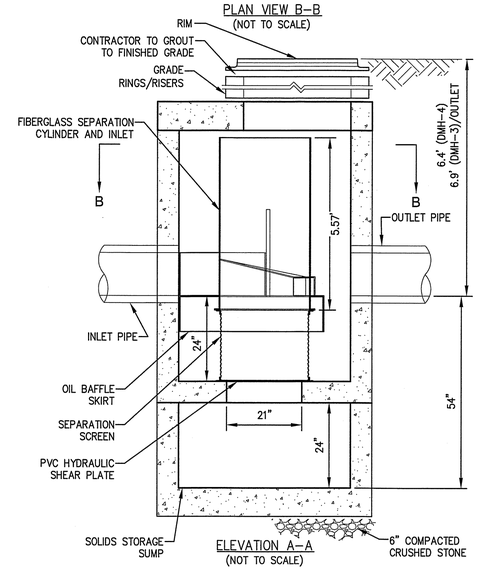

ELEVATION A–A
(NOT TO SCALE)

GENERAL NOTES

1. CONTECH TO PROVIDE ALL MATERIALS UNLESS NOTED OTHERWISE.
2. DIMENSIONS MARKED WITH ( ) ARE REFERENCE DIMENSIONS. ACTUAL DIMENSIONS MAY VARY.
3. CDS WATER QUALITY STRUCTURE SHALL BE IN ACCORDANCE WITH ALL DESIGN DATA AND INFORMATION CONTAINED IN THIS DRAWING.
4. STRUCTURE SHALL MEET AASHTO HS20 AND CASTINGS SHALL MEET AASHTO M306 LOAD RATING, ASSUMING GROUNDWATER ELEVATION AT, OR BELOW, THE OUTLET PIPE INVERT ELEVATION.
5. PVC HYDRAULIC SHEAR PLATE IS PLACED ON SHELF AT BOTTOM OF SCREEN CYLINDER. REMOVE AND REPLACE AS NECESSARY DURING MAINTENANCE CLEANING.

INSTALLATION NOTES

2. CONTRACTOR TO PROVIDE EQUIPMENT WITH SUFFICIENT LIFTING AND REACH CAPACITY TO LIFT AND SET THE CDS MANHOLE STRUCTURE (LIFTING CLUTCHES PROVIDED).
3. CONTRACTOR TO ADD JOINT SEALANT BETWEEN ALL STRUCTURE SECTIONS, AND ASSEMBLE STRUCTURE.
4. CONTRACTOR TO PROVIDE, INSTALL, AND GROUT PIPES. MATCH PIPE INVERTS WITH ELEVATIONS SHOWN.
5. CONTRACTOR TO TAKE APPROPRIATE MEASURES TO ASSURE UNIT IS WATER TIGHT, HOLDING WATER TO FLOWLINE INVERT MINIMUM. IT IS SUGGESTED THAT ALL JOINTS BELOW PIPE INVERTS ARE GROUTED.
6. SEE DRAINAGE PIPE SCHEDULE ON SHEET 13 OF 20 FOR PIPE INVERTS.

CONTECH CDS–2015–4 (WQS)

(NOT TO SCALE)

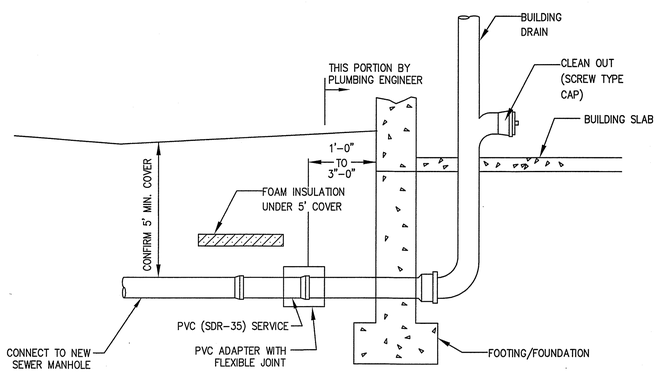

TYPICAL BUILDING SEWER SERVICE

(NOT TO SCALE)

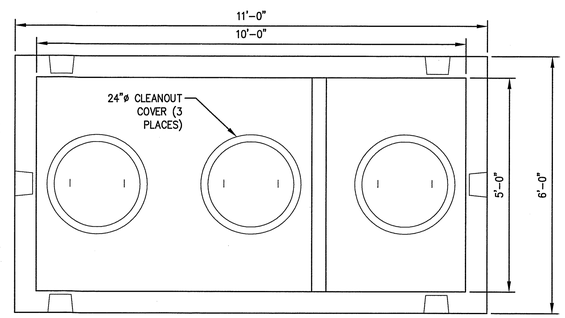

PLAN VIEW

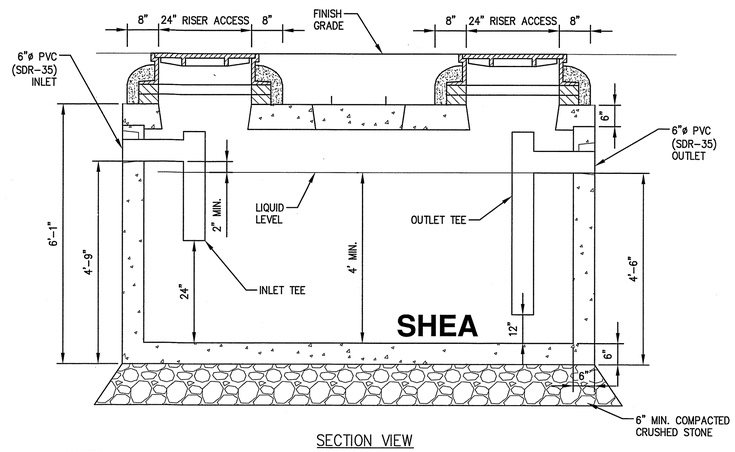

SECTION VIEW

NOTES:

1. CONCRETE: 5,000 PSI MIN. AFTER 28 DAYS.
2. DESIGN WILL CONFIRM WITH 248 CMR: BOARD OF STATE EXAMINERS OF PLUMBERS AND GAS FITTERS FUEL GAS AND PLUMBING CODE AND APPLICABLE TOWN OF DANVERS REGULATIONS.
3. ALL REINFORCEMENT PER ASTM C1227.
4. DESIGNED FOR H–20 LOADING.
5. SIZE TO BE CONFIRMED BY PLUMBING ENGINEER.

	WEIGHT
ITEM NO. TK–M1500C	22,840#
TK–M1500C2C	24,783#

COMMERCIAL LINE GREASE TRAP (1,500 GALLON MONOLITHIC)

NOT TO SCALE

ISSUED FOR PERMITTING

The Morin-Cameron GROUP, INC.
CIVIL ENGINEERS | ENVIRONMENTAL CONSULTANTS
LAND SURVEYORS | LAND USE PLANNERS
66 ELM STREET, DANVERS, MASSACHUSETTS 01923
P: 978-777-8586, F: 978-774-3488, W: WWW.MORINCAMERON.COM

COMMONWEALTH OF MASSACHUSETTS SCOTT P. CAMERON CIVIL No. 47661 Registered Professional Engineer 9-12-19

SURVEY BY: CSI SURVEY, INC
DRAFTED BY: ABR
CHECKED BY: SPC
APPROVED BY: SPC
SCALE: 1"=20'
DATE: AUGUST 12, 2019

NO.	DESCRIPTION	DATE

REVISIONS

SITE REDEVELOPMENT PLANS
MISSION BOATHOUSE RESTAURANT
IN
BEVERLY, MASSACHUSETTS
1 WATER STREET
(ASSESSOR'S MAP 1, LOT 85)
PREPARED FOR:
BEVERLY RESTAURANT ASSOCIATES, LLC

CONSTRUCTION DETAILS III

DRAWING NO. C–10

© THE MORIN–CAMERON GROUP, INC. 2019

PROJ. #3743

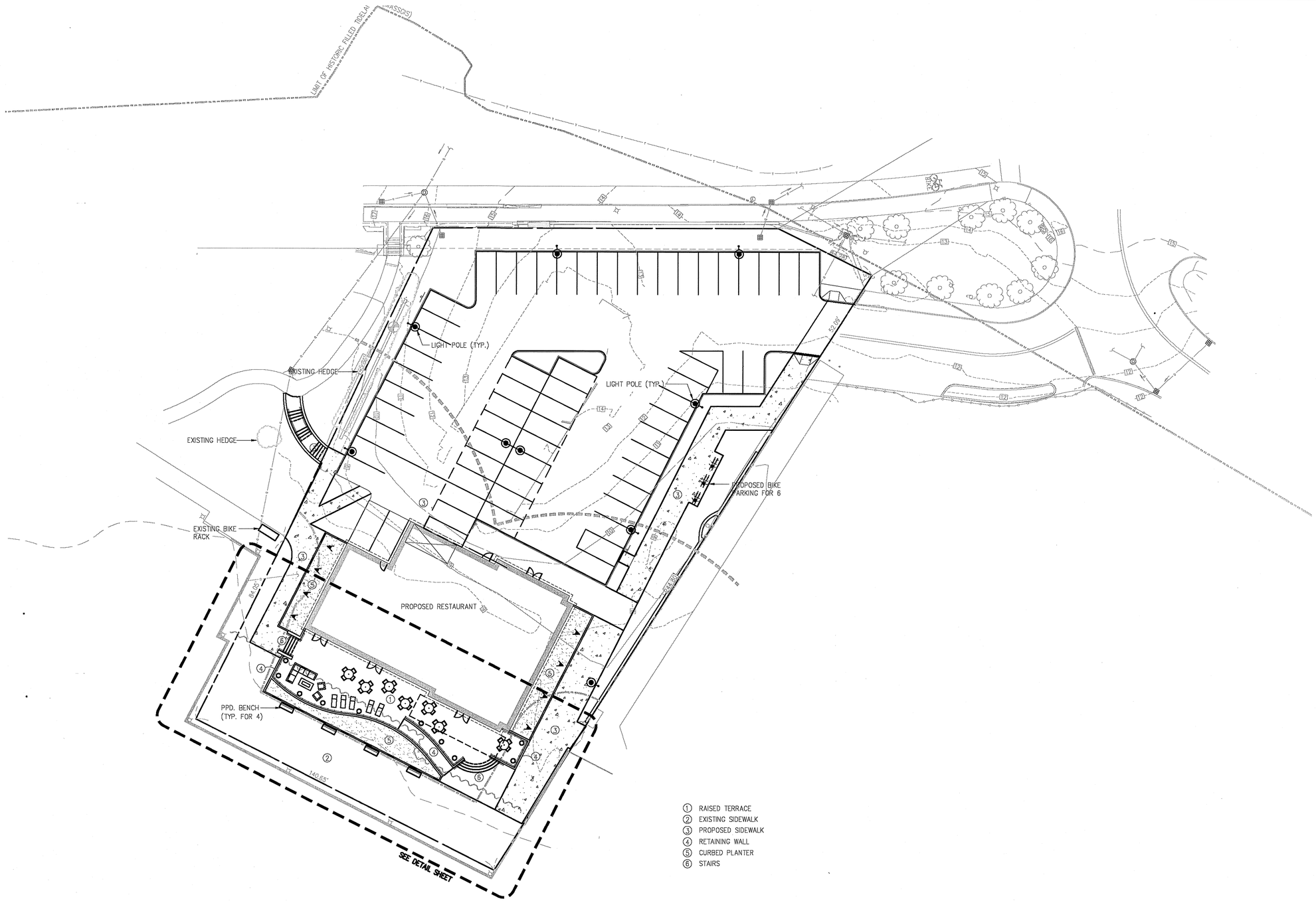

① RAISED TERRACE
② EXISTING SIDEWALK
③ PROPOSED SIDEWALK
④ RETAINING WALL
⑤ CURBED PLANTER
⑥ STAIRS

NORTH

0' 20' 40'

1 Water St.
Beverly, MA

Applicant

Beverly Restaurant Associates, LLC

Landscape Architect

Radner Design Associates, Inc.
945 Concord Street, Suite 100
Framingham, MA 01701
508.736.6144
www.RadnerDesign.com

Revision:

Drawn: mr

Scale: 1"=20'-0"

PLANNING BOARD

Sheet Name:
Site Improvements Plan

Project No.:
19-14

Issue Date:
08.12.2019

Sheet No.:
L1

Drawings and Designs © 2019 Radner Design Associates, Inc.

SEGMENTAL RETAINING WALL

CONCRETE UNIT PAVERS

STEPS

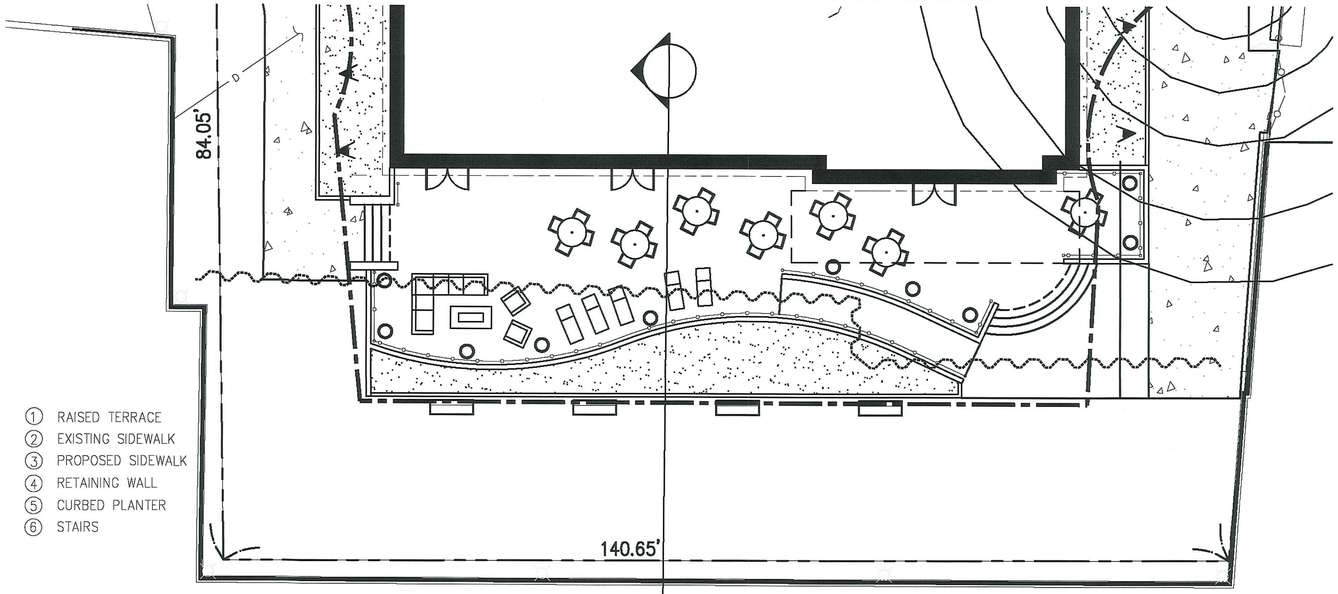

PLAN AT WATERFRONT
SCALE: 1"=10'-0"

SECTION

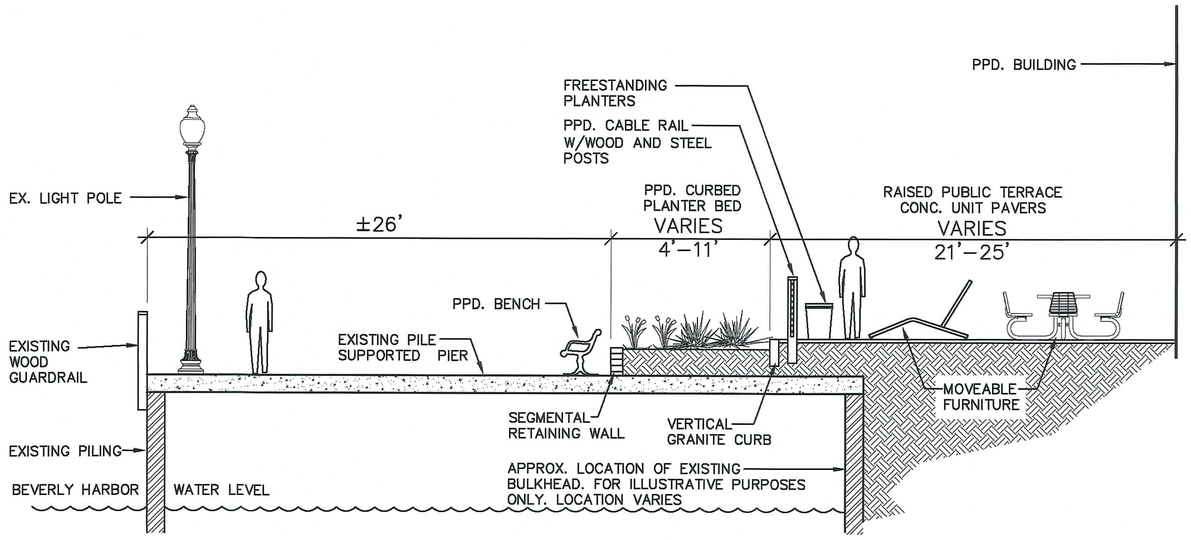

SECTION AT WATERFRONT
SCALE: 1/4"=1'-0"

CABLE RAIL W/WOOD AND STEEL POSTS

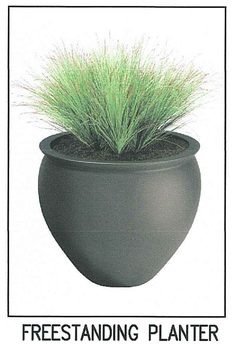

FREESTANDING PLANTER

BENCH

CHAISE LOUNGE

PICNIC TABLES

1 Water St.
Beverly, MA

Applicant

Beverly Restaurant Associates, LLC

Landscape Architect

Radner Design Associates, Inc.
945 Concord Street, Suite 100
Framingham, MA 01701
508.736.6144
www.RadnerDesign.com

Revision:

Drawn: mr

Scale: AS NOTED

PLANNING BOARD

Sheet Name:
Materials Palette

Project No.:
19-14

Issue Date:
08.12.2019

Sheet No.:
L2

Drawings and Designs © 2019 Radner Design Associates, Inc.

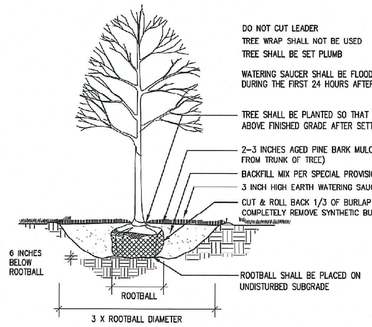

DECIDUOUS TREE PLANTING

NOT TO SCALE

RAISE AND REPLANT ANY SHRUBS WHICH SETTLE MORE THAN 2 INCHES AFTER PLANTING & WATERING IN

SHRUBS SHALL BE SET PLUMB

WATER BY FLOODING TWICE IN FIRST TWO HOURS AFTER PLANTING. WATER & MAINTAIN AS PER STANDARD SPECIFICATIONS

EXCAVATE TO REQUIRED DEPTH AND BACKFILL WITH PLANTING MIX

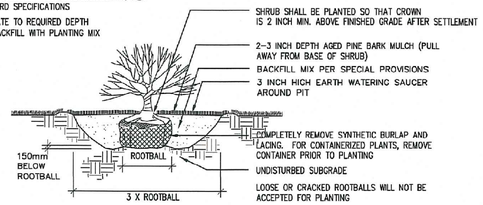

SHRUB PLANTING

NOT TO SCALE

EXCAVATE TO REQUIRED DEPTH AND BACKFILL WITH PLANTING MIX

RAISE AND REPLANT ANY SHRUBS WHICH SETTLE MORE THAN 3 INCHES AFTER PLANTING AND WATERING IN

WATER BY FLOODING TWICE IN FIRST TWO HOURS AFTER PLANTING. WATER & MAINTAIN AS PER STANDARD SPECIFICATIONS

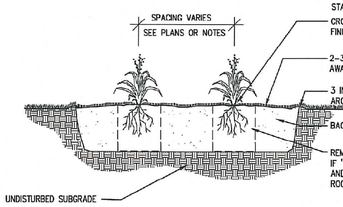

PERENNIAL PLANTING

NOT TO SCALE

PLANTING NOTES

1. FURNISH AND INSTALL PLANTS AS SHOWN. CONTRACTOR SHALL BE RESPONSIBLE FOR QUANTITY OF SHRUBS GRAPHICALLY SHOWN ON PLANS. IF THERE IS A DISCREPANCY BETWEEN PLANT LIST QUANTITIES AND GRAPHICS, THE GRAPHIC SHALL TAKE PRECEDENCE.
2. PRIOR TO THE START OF EXCAVATION FOR THE PROJECT BOTH ON AND OF THE SITE, THE CONTRACTOR SHALL NOTIFY DIGSAFE AND BE PROVIDED A DIGSAFE NUMBER INDICATING THAT EXISTING UTILITIES HAVE BEEN LOCATED AND MARKED.
3. CONTRACTOR SHALL BEGIN 90 DAY MAINTENANCE PERIOD IMMEDIATELY UPON PLANTING AND WILL CONTINUE UNTIL FINAL ACCEPTANCE.
4. CONTRACTOR SHALL VERIFY TREE REMOVALS WITH LANDSCAPE ARCHITECT PRIOR TO CONSTRUCTION START.
5. CONTRACTOR SHALL MAINTAIN POSITIVE DRAINAGE AWAY FROM BUILDING FOUNDATIONS, STRUCTURES, AND PLANTING BEDS.
6. MAXIMUM SLOPE WITHIN DISTURBED AREAS SHALL NOT EXCEED 3:1, UNLESS OTHERWISE NOTED.
7. PLANTS SHALL BEAR THE SAME RELATIONSHIP TO FINISH GRADE AS TO ORIGINAL GRADES BEFORE DIGGING.
8. PLANT MATERIALS SHALL CONFORM TO THE GUIDELINES ESTABLISHED BY "THE AMERICAN STANDARD FOR NURSERY STOCK", PUBLISHED BY THE AMERICAN ASSOCIATION OF NURSERYMEN.
9. PLANTS TO BE BALLED IN BURLAP OR CONTAINERIZED.
10. MULCH FOR PLANTED AREAS TO BE AGED PINE BARK: PARTIALLY DECOMPOSED, DARK BROWN IN COLOR AND FREE OF WOOD CHIPS THICKER THAN 1/4 INCH.
11. PLANTING SOIL MIX: LOAM THOROUGHLY INCORPORATED WITH ROTTED MANURE PROPORTIONED 5 C.Y. TO 1 C.Y. OR EQUIVALENT. USE OF PEAT MOSS IS PROHIBITED.
12. THE LANDSCAPE CONTRACTOR SHALL GUARANTEE PLANT MATERIALS FOR ONE (1) FULL YEAR FROM DATE OF ACCEPTANCE. REQUEST THE LANDSCAPE ARCHITECT PROVIDE A WRITTEN LETTER OF ACCEPTANCE UPON COMPLETION OF EACH PHASE.
13. PLANT MATERIALS ARE SUBJECT TO THE APPROVAL OF THE LANDSCAPE ARCHITECT, AT THE NURSERY, AND AT THE SITE.
14. LANDSCAPE ARCHITECT TO FLAG TREES TO BE TRANSPLANTED PRIOR TO CONSTRUCTION START.
15. AREAS OF THE SITE WHICH HAVE BEEN DISTURBED AND NOT OTHERWISE DEVELOPED SHALL BE LOAMED WITH TOPSOIL TO A MINIMUM DEPTH OF 6", AND SEEDED WITH A MIX CONSISTING OF 40% PERENNIAL RYE GRASS; 30% CHEWINGS FESCUE; 30% KENTUCKY BLUEGRASS.
16. SCREENED IMAGES SHOW EXISTING CONDITIONS. WHERE EXISTING CONDITIONS LIE UNDER OR ARE IMPINGED UPON BY PROPOSED BUILDINGS AND/OR SITE ELEMENTS, THE EXISTING CONDITION WILL BE REMOVED, ABANDONDED AND/OR CAPPED OR DEMOLISHED AS REQUIRED.
17. PROVIDE AUTOMATIC IRRIGATION SYSTEM FOR PLANTINGS AND LAWN AREAS UNLESS OTHERWISE NOTED. SUBMIT DESIGN PLANS AND PRODUCT LITERATURE PER THE SPECIFICATIONS.
18. THERE SHALL BE NO SUBSTITUTION OF PLANT SPECIES WITHOUT AUTHORIZATION BY THE LANDSCAPE ARCHITECT.
19. NO PLANTING SHALL BE INSTALLED BEFORE ACCEPTANCE OF ROUGH GRADING.
20. PLANTS TO BE THOROUGHLY WATERED AFTER INSTALLATION, AT LEAST TWICE WITHIN THE FIRST 24 HOURS.

Plant Schedule

Qty	Latin Name	Common Name	Size	Remarks
	Deciduous Shade Trees			
2	Gleditsia triacanthos inermis 'Skyline'	Skyline Honeylocust	3-3.5" Cal.	B&B, full, round, symmetrical, high branched
2	Platanus acerifolia 'Bloodgood'	Bloodgood Planetree	3-3.5" Cal.	B&B, full, round, symmetrical, high-branched
	Ornamental Flowering Treew			
7	Amelanchier canadensis	Shadblow Serviceberry	8-10' Ht.	B&B, full, round, multi-stem
	Shrubs			
11	Hibiscus syriacus.	Rose of Sharon	3-4' Ht.	
27	Hydrangea macrophylla 'All Summer Beauty'	All Summer Beauty Hydrangea	7 Gal.	Container
5	Hydrangea macrophylla 'Nikko Blue'	Nikko Hydrangea	7 Gal.	Container
6	Juniperus chinensis 'Hetzi Columnaris'	Upright Hetz Juniper	4-5' Ht.	
15	Juniperus horizontalis 'Bar Harbor'.	Bar Harbor Juniper	12-18" Spr.	Container
52	Juniperus horizontalis 'Blue Chip'	Blue Chip Juniper	12-18" Spr.	Container
16	Myrica pennsylvanica	Northern Bayberry	24-30" Ht.	Container
8	Physocarpus opulifolium 'Diabolo'	Ninebark	3-4' Ht.	Container
22	Potentilla fruticosa 'Abbotswood'	Abbotswood Potentilla	12-18" Ht.	Container
10	Rosa x 'Knock Out'	Knock Out Rose	5 Gal.	Container
7	Spiraea japonica 'Shrobana'	Shrobana Spirea	12-18" Ht.	Container
	Perennials, Grasses and Groundcovers			
44	Arctostaphyllos uva-ursi	Bearberry	1 Gal.	Container
27	Carex pennsylvanica	Oak Sedge	1 Gal.	Container
13	Coreopsis verticillata 'Moonbeam'	Moonbeam Coreopsis	1 Gal.	Container
11	Hemerocallis x 'Pardon Me'	Pardon Me Daylily	1 Gal.	Container
43	Hemerocallis x 'Stella de Oro'	Stella D'Oro Daylily	1 Gal.	Container
47	Liriope muscari 'Variegata'	Variegated Lilyturf	1 Gal.	Container
60	Nepeta x faassenii 'Walker's Low'	Walker's Low Catmint	1 Gal.	Container
21	Panicum virgatum 'Shenandoah'	Shenandoah Switch Grass	1 Gal.	Container
55	Pennisetum alopecuroides.	Fountain Grass	1 Gal.	Container
38	Sedum 'Autumn Joy'	Autumn Joy Stonecrop	1 Gal.	Container

LOONDON PLANETREE

HONEYLOCUST

SHADBLOW

KNOCKOUT ROSE

HYDRANGEA

POTENTILLA

NORTHERN BAYBERRY

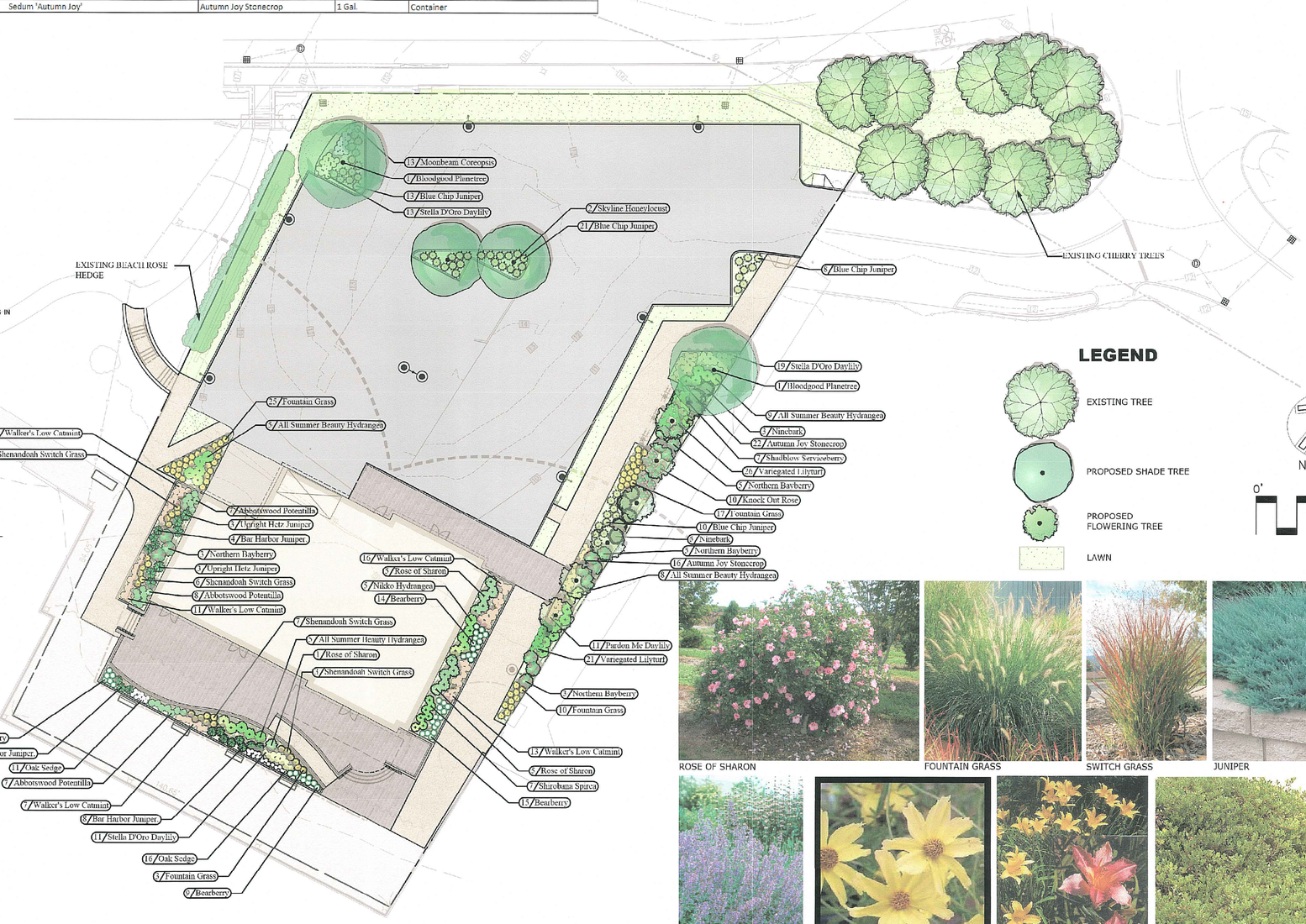

LEGEND

EXISTING TREE

PROPOSED SHADE TREE

PROPOSED FLOWERING TREE

LAWN

NORTH

0' 20' 40'

ROSE OF SHARON

FOUNTAIN GRASS

SWITCH GRASS

JUNIPER

CATMINT

COREOPSIS

DAYLILY

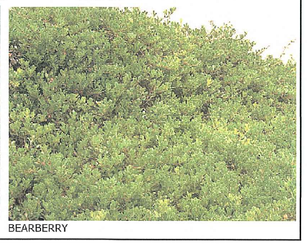
BEARBERRY

1 Water St.

Beverly, MA

Applicant

Beverly Restaurant Associates, LLC

Landscape Architect

Radner Design Associates, Inc.
945 Concord Street, Suite 100
Framingham, MA 01701
508.736.6144
www.RadnerDesign.com

Revision:

Drawn: mr

Scale: 1"=20'-0"

PLANNING BOARD

Sheet Name: Planting Plan

Project No.: 19-14

Issue Date: 08.12.2019

Sheet No.: L3

Drawings and Designs © 2019 Radner Design Associates, Inc.

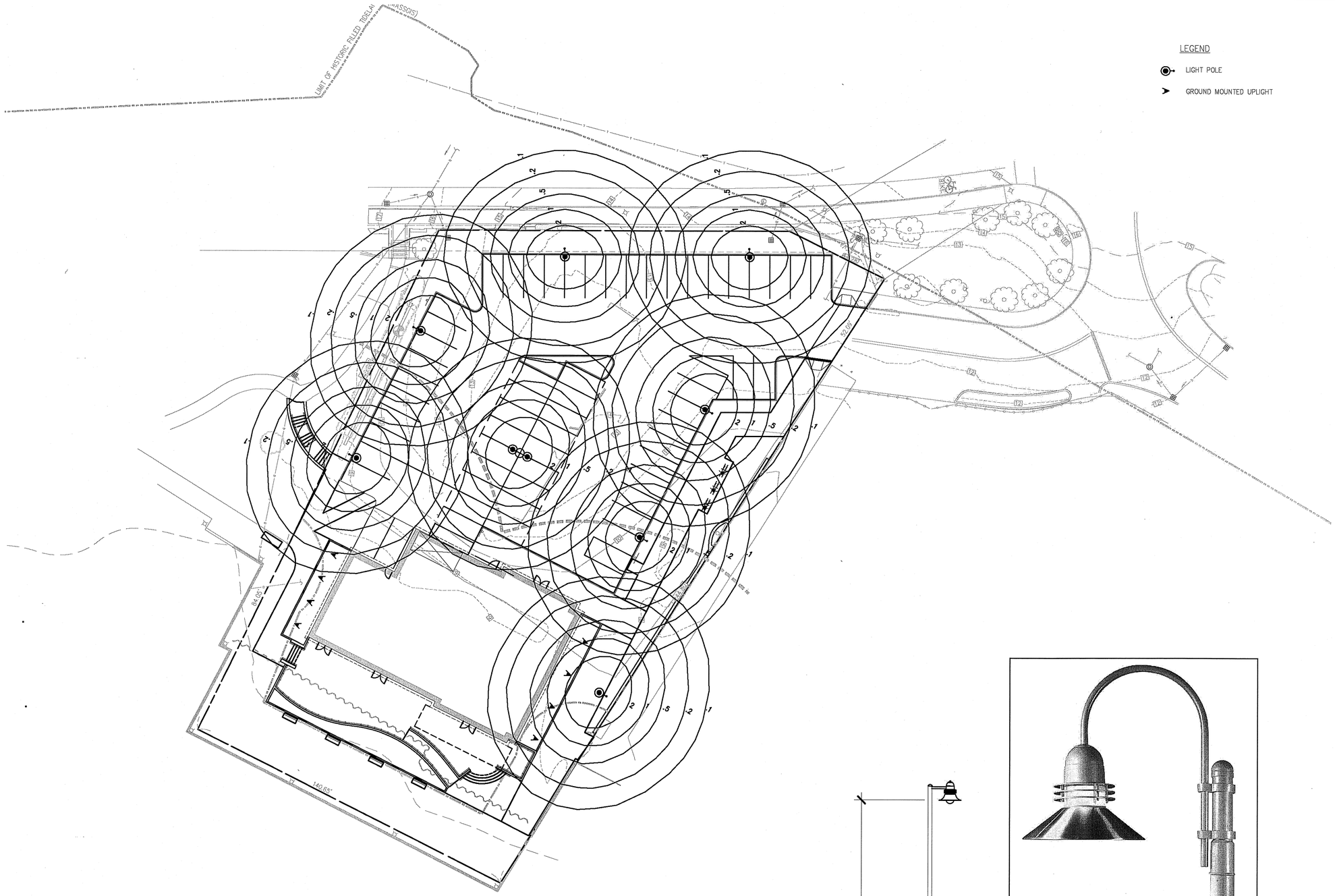

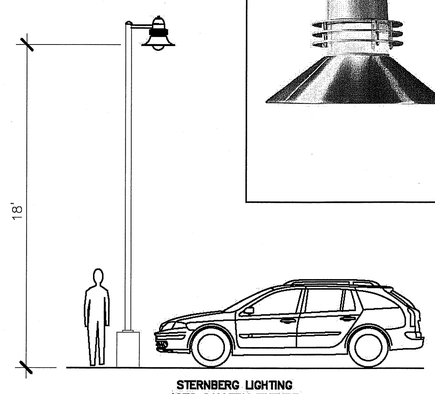

STERNBERG LIGHTING
1970 GALLERY FIXTURE
FROSTED ACRYLIC, TYPE 3 56 LED's

LIGHT POLE ELEVATION
1/4"=1'-0"

NORTH

0' 20' 40'

1 Water St.
Beverly, MA

Applicant

Beverly Restaurant Associates, LLC

Landscape Architect

Radner Design Associates, Inc.
945 Concord Street, Suite 100
Framingham, MA 01701
508.736.6144
www.RadnerDesign.com

Revision:

Drawn: mr

Scale: 1"=20'-0"

PLANNING BOARD

Sheet Name:
Lighting Plan

Project No.:
19-14

Issue Date:
08.12.2019

Sheet No.:
L4

Drawings and Designs © 2019 Radner Design Associates, Inc.