Stormwater Management Report

Thaxton Heights Road
OSRD Subdivision

Thaxton Road & Grover Street
Beverly, MA

March 6, 2019

Applicant:
Hickory Street Realty Trust

Submitted to:
City of Beverly Planning Board

Prepared by:
Griffin Engineering
Beverly, MA

TABLE OF CONTENTS

Stormwater Management Checklist

Attachment A Project Description

1.0 Introduction A-1
1.1 Existing Conditions A-1
1.2 Proposed Conditions A-1

2.0 Stormwater Management Standards A-2
2.1 Standard 1: No New Untreated Discharges A-2
2.2 Standard 2: Peak Rate Attenuation A-2
2.3 Standard 3: Recharge A-4
2.4 Standard 4: Water Quality A-5
2.5 Standard 5: Land Uses With Higher Potential Pollutant Loads A-6
2.6 Standard 6: Critical Areas A-6
2.7 Standard 7: Redevelopment Projects and Other Projects Subject to the Standards only to the Maximum Extent Practicable A-6
2.8 Standard 8: Construction Period Pollution Prevention and Erosion And Sediment Control A-6
2.9 Standard 9: Operation and Maintenance Plan A-7
2.10 Standard 10: Illicit Discharges A-7

3.0 Summary A-7

Attachment B Stormwater Computations
B.1 - Rip Rap Discharge Design Calculations
B.2 - Recharge Volume & BMP Design Calculations
B.3 - Drawdown Analysis
B.4 – Mounding Calculation
B.5 - Water Quality Volume Calculation
B.6 - Water Quality Flow Rate Calculation
B.7 - TSS Removal Calculation Worksheets

Attachment C Drainage Calculations (HydroCAD)

Attachment D Subcatchment Plans

Attachment E Long-Term Pollution Prevention Plan

Attachment F Operation and Maintenance Plan

Attachment G Illicit Discharge Statement

Attachment H First Defense NJCAT Technology Verification Report

STORMWATER MANAGEMENT CHECKLIST

Massachusetts Department of Environmental Protection
Bureau of Resource Protection - Wetlands Program

Checklist for Stormwater Report

A. Introduction

Important: When filling out forms on the computer, use only the tab key to move your cursor - do not use the return key.

A Stormwater Report must be submitted with the Notice of Intent permit application to document compliance with the Stormwater Management Standards. The following checklist is NOT a substitute for the Stormwater Report (which should provide more substantive and detailed information) but is offered here as a tool to help the applicant organize their Stormwater Management documentation for their Report and for the reviewer to assess this information in a consistent format. As noted in the Checklist, the Stormwater Report must contain the engineering computations and supporting information set forth in Volume 3 of the Massachusetts Stormwater Handbook. The Stormwater Report must be prepared and certified by a Registered Professional Engineer (RPE) licensed in the Commonwealth.

The Stormwater Report must include:

- The Stormwater Checklist completed and stamped by a Registered Professional Engineer (see page 2) that certifies that the Stormwater Report contains all required submittals.[1] This Checklist is to be used as the cover for the completed Stormwater Report.
- Applicant/Project Name
- Project Address
- Name of Firm and Registered Professional Engineer that prepared the Report
- Long-Term Pollution Prevention Plan required by Standards 4-6
- Construction Period Pollution Prevention and Erosion and Sedimentation Control Plan required by Standard 8[2]
- Operation and Maintenance Plan required by Standard 9

In addition to all plans and supporting information, the Stormwater Report must include a brief narrative describing stormwater management practices, including environmentally sensitive site design and LID techniques, along with a diagram depicting runoff through the proposed BMP treatment train. Plans are required to show existing and proposed conditions, identify all wetland resource areas, NRCS soil types, critical areas, Land Uses with Higher Potential Pollutant Loads (LUHPPL), and any areas on the site where infiltration rate is greater than 2.4 inches per hour. The Plans shall identify the drainage areas for both existing and proposed conditions at a scale that enables verification of supporting calculations.

As noted in the Checklist, the Stormwater Management Report shall document compliance with each of the Stormwater Management Standards as provided in the Massachusetts Stormwater Handbook. The soils evaluation and calculations shall be done using the methodologies set forth in Volume 3 of the Massachusetts Stormwater Handbook.

To ensure that the Stormwater Report is complete, applicants are required to fill in the Stormwater Report Checklist by checking the box to indicate that the specified information has been included in the Stormwater Report. If any of the information specified in the checklist has not been submitted, the applicant must provide an explanation. The completed Stormwater Report Checklist and Certification

[1] The Stormwater Report may also include the Illicit Discharge Compliance Statement required by Standard 10. If not included in the Stormwater Report, the Illicit Discharge Compliance Statement must be submitted prior to the discharge of stormwater runoff to the post-construction best management practices.

[2] For some complex projects, it may not be possible to include the Construction Period Erosion and Sedimentation Control Plan in the Stormwater Report. In that event, the issuing authority has the discretion to issue an Order of Conditions that approves the project and includes a condition requiring the proponent to submit the Construction Period Erosion and Sedimentation Control Plan before commencing any land disturbance activity on the site.

B. Stormwater Checklist and Certification

The following checklist is intended to serve as a guide for applicants as to the elements that ordinarily need to be addressed in a complete Stormwater Report. The checklist is also intended to provide

Checklist for Stormwater Report

conservation commissions and other reviewing authorities with a summary of the components necessary for a comprehensive Stormwater Report that addresses the ten Stormwater Standards.

Note: Because stormwater requirements vary from project to project, it is possible that a complete Stormwater Report may not include information on some of the subjects specified in the Checklist. If it is determined that a specific item does not apply to the project under review, please note that the item is not applicable (N.A.) and provide the reasons for that determination.

A complete checklist must include the Certification set forth below signed by the Registered Professional Engineer who prepared the Stormwater Report.

Registered Professional Engineer's Certification

I have reviewed the Stormwater Report, including the soil evaluation, computations, Long-term Pollution Prevention Plan, the Construction Period Erosion and Sedimentation Control Plan (if included), the Long-term Post-Construction Operation and Maintenance Plan, the Illicit Discharge Compliance Statement (if included) and the plans showing the stormwater management system, and have determined that they have been prepared in accordance with the requirements of the Stormwater Management Standards as further elaborated by the Massachusetts Stormwater Handbook. I have also determined that the information presented in the Stormwater Checklist is accurate and that the information presented in the Stormwater Report accurately reflects conditions at the site as of the date of this permit application.

Registered Professional Engineer Block and Signature

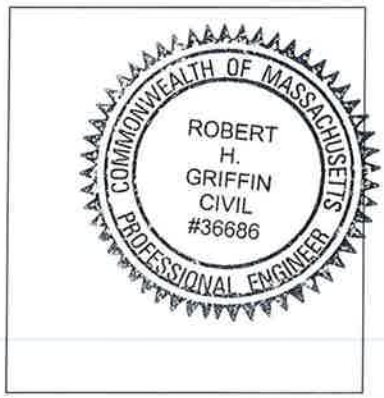

Signature and Date 3/6/19

Checklist

Project Type: Is the application for new development, redevelopment, or a mix of new and redevelopment?

☐ New development

☐ Redevelopment

☒ Mix of New Development and Redevelopment

Checklist (continued)

LID Measures: Stormwater Standards require LID measures to be considered. Document what environmentally sensitive design and LID Techniques were considered during the planning and design of

Checklist for Stormwater Report

the project:

- ☒ No disturbance to any Wetland Resource Areas
- ☒ Site Design Practices (e.g. clustered development, reduced frontage setbacks)
- ☐ Reduced Impervious Area (Redevelopment Only)
- ☒ Minimizing disturbance to existing trees and shrubs
- ☐ LID Site Design Credit Requested:
  - ☐ Credit 1
  - ☐ Credit 2
  - ☐ Credit 3
- ☐ Use of "country drainage" versus curb and gutter conveyance and pipe
- ☐ Bioretention Cells (includes Rain Gardens)
- ☐ Constructed Stormwater Wetlands (includes Gravel Wetlands designs)
- ☐ Treebox Filter
- ☐ Water Quality Swale
- ☐ Grass Channel
- ☐ Green Roof
- ☐ Other (describe): _____

Standard 1: No New Untreated Discharges

- ☒ No new untreated discharges
- ☒ Outlets have been designed so there is no erosion or scour to wetlands and waters of the Commonwealth
- ☒ Supporting calculations specified in Volume 3 of the Massachusetts Stormwater Handbook included.

Checklist (continued)

Standard 2: Peak Rate Attenuation

Checklist for Stormwater Report

☐ Standard 2 waiver requested because the project is located in land subject to coastal storm flowage and stormwater discharge is to a wetland subject to coastal flooding.

☒ Evaluation provided to determine whether off-site flooding increases during the 100-year 24-hour storm.

☒ Calculations provided to show that post-development peak discharge rates do not exceed pre-development rates for the 2-year and 10-year 24-hour storms. If evaluation shows that off-site flooding increases during the 100-year 24-hour storm, calculations are also provided to show that post-development peak discharge rates do not exceed pre-development rates for the 100-year 24-hour storm.

Standard 3: Recharge

☒ Soil Analysis provided.

☒ Required Recharge Volume calculation provided.

☐ Required Recharge volume reduced through use of the LID site Design Credits.

☒ Sizing the infiltration, BMPs is based on the following method: Check the method used.

☒ Static ☐ Simple Dynamic ☐ Dynamic Field[1]

☐ Runoff from all impervious areas at the site discharging to the infiltration BMP.

☒ Runoff from all impervious areas at the site is *not* discharging to the infiltration BMP and calculations are provided showing that the drainage area contributing runoff to the infiltration BMPs is sufficient to generate the required recharge volume.

☒ Recharge BMPs have been sized to infiltrate the Required Recharge Volume.

☐ Recharge BMPs have been sized to infiltrate the Required Recharge Volume *only* to the maximum extent practicable for the following reason:

- ☐ Site is comprised solely of C and D soils and/or bedrock at the land surface
- ☐ M.G.L. c. 21E sites pursuant to 310 CMR 40.0000
- ☐ Solid Waste Landfill pursuant to 310 CMR 19.000
- ☐ Project is otherwise subject to Stormwater Management Standards only to the maximum extent practicable.

☒ Calculations showing that the infiltration BMPs will drain in 72 hours are provided.

☐ Property includes a M.G.L. c. 21E site or a solid waste landfill and a mounding analysis is included.

[1] 80% TSS removal is required prior to discharge to infiltration BMP if Dynamic Field method is used.

Checklist (continued)

Standard 3: Recharge (continued)

☒ The infiltration BMP is used to attenuate peak flows during storms greater than or equal to the 10-year 24-hour storm and separation to seasonal high groundwater is less than 4 feet and a mounding analysis is provided.

☒ Documentation is provided showing that infiltration BMPs do not adversely impact nearby wetland resource areas.

Standard 4: Water Quality

The Long-Term Pollution Prevention Plan typically includes the following:

- Good housekeeping practices;
- Provisions for storing materials and waste products inside or under cover;
- Vehicle washing controls;
- Requirements for routine inspections and maintenance of stormwater BMPs;
- Spill prevention and response plans;
- Provisions for maintenance of lawns, gardens, and other landscaped areas;
- Requirements for storage and use of fertilizers, herbicides, and pesticides;
- Pet waste management provisions;
- Provisions for operation and management of septic systems;
- Provisions for solid waste management;
- Snow disposal and plowing plans relative to Wetland Resource Areas;
- Winter Road Salt and/or Sand Use and Storage restrictions;
- Street sweeping schedules;
- Provisions for prevention of illicit discharges to the stormwater management system;
- Documentation that Stormwater BMPs are designed to provide for shutdown and containment in the event of a spill or discharges to or near critical areas or from LUHPPL;
- Training for staff or personnel involved with implementing Long-Term Pollution Prevention Plan;
- List of Emergency contacts for implementing Long-Term Pollution Prevention Plan.

☒ A Long-Term Pollution Prevention Plan is attached to Stormwater Report and is included as an attachment to the Wetlands Notice of Intent.

☒ Treatment BMPs subject to the 44% TSS removal pretreatment requirement and the one inch rule for calculating the water quality volume are included, and discharge:

- ☐ is within the Zone II or Interim Wellhead Protection Area
- ☒ is near or to other critical areas
- ☐ is within soils with a rapid infiltration rate (greater than 2.4 inches per hour)
- ☐ involves runoff from land uses with higher potential pollutant loads.

☐ The Required Water Quality Volume is reduced through use of the LID site Design Credits.

☒ Calculations documenting that the treatment train meets the 80% TSS removal requirement and, if applicable, the 44% TSS removal pretreatment requirement, are provided.

Checklist (continued)

Standard 4: Water Quality (continued)

☒ The BMP is sized (and calculations provided) based on:

- ☒ The ½" or 1" Water Quality Volume or
- ☒ The equivalent flow rate associated with the Water Quality Volume and documentation is provided showing that the BMP treats the required water quality volume.

☒ The applicant proposes to use proprietary BMPs, and documentation supporting use of proprietary BMP and proposed TSS removal rate is provided. This documentation may be in the form of the propriety BMP checklist found in Volume 2, Chapter 4 of the Massachusetts Stormwater Handbook and submitting copies of the TARP Report, STEP Report, and/or other third party studies verifying performance of the proprietary BMPs.

☐ A TMDL exists that indicates a need to reduce pollutants other than TSS and documentation showing that the BMPs selected are consistent with the TMDL is provided.

Standard 5: Land Uses With Higher Potential Pollutant Loads (LUHPPLs)

☐ The NPDES Multi-Sector General Permit covers the land use and the Stormwater Pollution Prevention Plan (SWPPP) has been included with the Stormwater Report.

☐ The NPDES Multi-Sector General Permit covers the land use and the SWPPP will be submitted ***prior to*** the discharge of stormwater to the post-construction stormwater BMPs.

☐ The NPDES Multi-Sector General Permit does ***not*** cover the land use.

☐ LUHPPLs are located at the site and industry specific source control and pollution prevention measures have been proposed to reduce or eliminate the exposure of LUHPPLs to rain, snow, snow melt and runoff, and been included in the long term Pollution Prevention Plan.

☐ All exposure has been eliminated.

☐ All exposure has ***not*** been eliminated and all BMPs selected are on MassDEP LUHPPL list.

☐ The LUHPPL has the potential to generate runoff with moderate to higher concentrations of oil and grease (e.g. all parking lots with >1000 vehicle trips per day) and the treatment train includes an oil grit separator, a filtering bioretention area, a sand filter or equivalent.

Standard 6: Critical Areas

☒ The discharge is near or to a critical area and the treatment train includes only BMPs that MassDEP has approved for stormwater discharges to or near that particular class of critical area.

☒ Critical areas and BMPs are identified in the Stormwater Report.

Checklist (continued)

Standard 7: Redevelopments and Other Projects Subject to the Standards only to the maximum extent practicable

Checklist for Stormwater Report

☒ The project is subject to the Stormwater Management Standards only to the maximum Extent Practicable as a:

☐ Limited Project

☐ Small Residential Projects: 5-9 single family houses or 5-9 units in a multi-family development provided there is no discharge that may potentially affect a critical area.

☒ Small Residential Projects: 2-4 single family houses or 2-4 units in a multi-family development with a discharge to a critical area

☐ Marina and/or boatyard provided the hull painting, service and maintenance areas are protected from exposure to rain, snow, snow melt and runoff

☐ Bike Path and/or Foot Path

☐ Redevelopment Project

☒ Redevelopment portion of mix of new and redevelopment.

☒ Certain standards are not fully met (Standard No. 1, 8, 9, and 10 must always be fully met) and an explanation of why these standards are not met is contained in the Stormwater Report.

☒ The project involves redevelopment and a description of all measures that have been taken to improve existing conditions is provided in the Stormwater Report. The redevelopment checklist found in Volume 2 Chapter 3 of the Massachusetts Stormwater Handbook may be used to document that the proposed stormwater management system (a) complies with Standards 2, 3 and the pretreatment and structural BMP requirements of Standards 4-6 to the maximum extent practicable and (b) improves existing conditions.

Standard 8: Construction Period Pollution Prevention and Erosion and Sedimentation Control

A Construction Period Pollution Prevention and Erosion and Sedimentation Control Plan must include the following information:

- Narrative;
- Construction Period Operation and Maintenance Plan;
- Names of Persons or Entity Responsible for Plan Compliance;
- Construction Period Pollution Prevention Measures;
- Erosion and Sedimentation Control Plan Drawings;
- Detail drawings and specifications for erosion control BMPs, including sizing calculations;
- Vegetation Planning;
- Site Development Plan;
- Construction Sequencing Plan;
- Sequencing of Erosion and Sedimentation Controls;
- Operation and Maintenance of Erosion and Sedimentation Controls;
- Inspection Schedule;
- Maintenance Schedule;
- Inspection and Maintenance Log Form.

☐ A Construction Period Pollution Prevention and Erosion and Sedimentation Control Plan containing the information set forth above has been included in the Stormwater Report.

Checklist (continued)

Standard 8: Construction Period Pollution Prevention and Erosion and Sedimentation Control (continued)

Checklist for Stormwater Report

☐ The project is highly complex and information is included in the Stormwater Report that explains why it is not possible to submit the Construction Period Pollution Prevention and Erosion and Sedimentation Control Plan with the application. A Construction Period Pollution Prevention and Erosion and Sedimentation Control has ***not*** been included in the Stormwater Report but will be submitted ***before*** land disturbance begins.

☐ The project is ***not*** covered by a NPDES Construction General Permit.

☐ The project is covered by a NPDES Construction General Permit and a copy of the SWPPP is in the Stormwater Report.

☒ The project is covered by a NPDES Construction General Permit but no SWPPP been submitted. The SWPPP will be submitted BEFORE land disturbance begins.

Standard 9: Operation and Maintenance Plan

☒ The Post Construction Operation and Maintenance Plan is included in the Stormwater Report and includes the following information:

- ☒ Name of the stormwater management system owners;
- ☒ Party responsible for operation and maintenance;
- ☒ Schedule for implementation of routine and non-routine maintenance tasks;
- ☒ Plan showing the location of all stormwater BMPs maintenance access areas;
- ☒ Description and delineation of public safety features;
- ☒ Estimated operation and maintenance budget; and
- ☒ Operation and Maintenance Log Form.

☐ The responsible party is ***not*** the owner of the parcel where the BMP is located and the Stormwater Report includes the following submissions:

- ☐ A copy of the legal instrument (deed, homeowner's association, utility trust or other legal entity) that establishes the terms of and legal responsibility for the operation and maintenance of the project site stormwater BMPs;
- ☐ A plan and easement deed that allows site access for the legal entity to operate and maintain BMP functions.

Standard 10: Prohibition of Illicit Discharges

☒ The Long-Term Pollution Prevention Plan includes measures to prevent illicit discharges;

☐ An Illicit Discharge Compliance Statement is attached;

☒ NO Illicit Discharge Compliance Statement is attached but will be submitted ***prior to*** the discharge of any stormwater to post-construction BMPs.

ATTACHMENT A

PROJECT
DESCRIPTION

1.0 INTRODUCTION

This stormwater management report is prepared in support of the proposed residential development of a 5.9-acre parcel along Grover Street and Thaxton Road in Beverly, MA. The project consists of constructing a 250-foot long dead-end private roadway (Thaxton Heights Road) with three new single-family residences.

The proposed project is designed in accordance with the City of Beverly Stormwater Management Ordinance and Massachusetts Department of Environmental Protection (MassDEP) Stormwater Management regulations. No work is proposed within MassDEP jurisdiction however, their regulations establish a framework for evaluating stormwater management systems for development projects. The narrative below compares the proposed construction to the MassDEP Stormwater Management requirements. The proposed drainage system is in full compliance with the standards as they apply to this combination redevelopment / new development project.

1.1 Existing Conditions

The 5.9-acre project site is mostly undeveloped land that was previously part of a large parcel of land, mostly located in the Town of Wenham. The Wenham and Beverly Lands were separated in 2017. A residential development, Spring Hill Estates, was approved for the Wenham parcel and is currently under construction. The Beverly project site perimeter consists of the Grover Street right-or way, four single-family residential properties along Thaxton Road, and a stub roadway connection to Thaxton Road. The topography of the site consists of sloping terrain to a wetland and intermittent stream that flows north parallel to Grover Street. The stream is tributary to the public water supply, Longham Reservoir. A 200-foot wide “Zone A” exists along both sides of the stream. The Zone A is considered a Critical Area under the MassDEP Stormwater Management regulations.

1.2 Proposed Conditions

The proposed project involves constructing Thaxton Height Road, a private dead-end roadway with three single-family residences. The roadway is approximately 250-feet long with an NFPA compliant hammerhead turning area and an emergency roadway connection for the Spring Hill Estates subdivision. The development includes municipal utility services and a modern stormwater drainage system designed for discharges near a Critical Area. No work is proposed within the Zone A of the 100-foot Buffer Zone associated with its nearby Bordering Vegetated Wetland. A site plan showing the proposed development and stormwater management features have been separately provided.

The proposed project is a mixture of new development and redevelopment. The

redevelopment portion of the project site is the existing roadway stub to Thaxton Road. The stub is proposed to be reconstructed and will result in a decrease in impervious surfaces tributary to Thaxton Road. When complete there will be an overall increase of impervious surfaces at the project site. The stormwater management system serving the new impervious surfaces fully meets all stormwater management standards.

2.0 STORMWATER MANAGEMENT STANDARDS

2.1 Standard 1: No New Untreated Discharges

The proposed project consists of one new point source discharge (an outfall pipe). Stormwater conveyed to the new outfall will be treated by deep-sump catchbasin pretreatment devices and an infiltration BMP treatment device (subsurface infiltration fields). Due to the adjacent Zone A critical area, additional pretreatment is required and will be provided for the roadway by a First Defense proprietary separator treatment device and by an oil grit separator for the Lot 3 driveway. The annual average TSS removal for the system is estimated to be 80% per MassDEP guidelines.

The new drainage outfall contains a level spreader device to disperse stormwater to acceptable velocities to minimize erosion. The level spreader and rip-rap sizing calculations are provided in Attachment B.1.

2.2 Standard 2: Peak Rate Attenuation

Hydrologic modeling was conducted using the HydroCAD computer model. This model uses an approximation of Soil Conservation Service TR-20 methods to calculate runoff rates and volumes based on descriptions of land use, ground characteristics, and size.

The time of concentration (Tc) for each subcatchment was calculated in HydroCAD using a combination of sheet flow and shallow concentrated flow. Sheet flow uses roughness coefficients (Manning's *n*) and watercourse slope to calculate travel time of stormwater runoff for each subcatchment. The site was modeled using a maximum of 100-feet of sheet flow. The shallow concentrated flow method was used to determine the velocity factor along the flow path of the runoff and thereby derive a travel time. The time of concentration of each subcatchment is the combination of these travel times. A minimum time of concentration of 6 minutes was used for all subcatchments, for both existing and proposed conditions.

Stormwater from the proposed development discharges to two design points: 1) towards Thaxton Road; and 2) towards the wetland system located on-site.

The enclosed drainage calculations show no increase in post-development peak runoff rates for the 2-, 10-, 25-, and 100-year, 24-hour storm events (see Attachment C for calculations) for both discharge locations. Comparison of pre- and post-development

calculation results are summarized below in Tables 1 and 2 for the two discharge design points.

Table 1 : Comparison of Pre-Development and Post Development Peak Runoff Rates (cfs) Towards Thaxton Road

Subcatchment 1	Storm Frequency			
	2-Year	10-Year	25-Year	100-Year
Pre-Development	0.15	0.26	0.33	0.42
Post-Development	0.15	0.25	0.32	0.41

Table 2 : Comparison of Pre-Development and Post Development Peak Runoff Rates (cfs) Towards On-Site Wetland

Subcatchment 2	Storm Frequency			
	2-Year	10-Year	25-Year	100-Year
Pre-Development	1.08	2.51	3.54	4.88
Post-Development	0.87	1.98	3.30	4.84

Pre-development and post-development runoff volumes have also been compared. A slight decrease in post-development peak runoff volumes has been calculated for all storm events. Comparison of pre- and post-development stormwater runoff volume calculations are summarized below in Table 3 and 4 for the two discharge design points.

Table 3: Comparison of Pre-Development and Post Development Peak Runoff Volume (cf) Towards Thaxton Road

Subcatchment 1	Storm Frequency			
	2-Year	10-Year	25-Year	100-Year
Pre-Development	479	822	1,051	1,337
Post-Development	452	785	1,010	1,290

Table 4 : Comparison of Pre-Development and Post Development Peak Runoff Volume (cf) Towards On-Site Wetland

Subcatchment 2	Storm Frequency			
	2-Year	10-Year	25-Year	100-Year
Pre-Development	5,487	11,707	16,245	22,166
Post-Development	4,054	10,130	14,765	20,797

2.3 Standard 3: Recharge

Site soils in the vicinity of the proposed work area are mapped by the United States Department of Agriculture – Soil Conservation Service (Essex Co. Massachusetts Southern Part Soil Survey, 1984) as being Canton fine sandy loam and Chatfield-Hollis-Rock Outcrop. The Canton soils are classified in the 'B' hydrologic soil group. The Chatfield-Hollis Rock Outcrop soils are a mix of the 'B, C & D' hydrologic soil groups. A 'B' hydrologic soil group was conservatively assigned for this analysis since it results is the greatest recharge volume.

For B-type soils, the Stormwater Management Guidelines require that a recharge device be provided with a capacity equal to 0.35-inches times the impervious area. The post-development new impervious surfaces are approximately 18,352 sf, which yields a minimum design groundwater recharge volume of approximately 535 cf.

The infiltration devices selected for this project consist of drywells for roof runoff and subsurface infiltration fields (Stormtech chambers & precast concrete chambers) for roadway and driveway runoff. The total static recharge capacity of the infiltration devices is approximately 2,072 cubic feet measured below the relief outlets. The total storage volume provided substantially exceeds the minimum volume required for this project. Supporting calculations are provided in Attachment B.2.

Test pits were performed to analyze the subsurface soil conditions at the project site and assign an exfiltration rate. The native soil in the vicinity of the proposed infiltration devices is a mix of loamy-sand and sandy-loam. Therefore, the applicable Rawls Rate used for the drawdown calculations of the stormwater infiltration devices was 1.02 inches per hour (sandy loam soils). At this rate, the proposed infiltration field #1 will drawdown in approximately 12 hours, infiltration field #2 will drawdown in approximately 24 hours, and the proposed drywells will drawdown in approximately 30 hours. This drawdown rate is less than the maximum 72-hour time period allowed by MassDEP Stormwater Management Regulations. Drawdown calculations are provided in Attachment B.3. Test pit data logs are provided on Sheet C-8 of the subdivision plan

set.

Infiltration field #1 is designed to provide peak rate attenuation above the 10-year storm event as well as recharge. MassDEP stormwater guidance requires a groundwater mounding calculation for infiltration field #1 since there is less than 4 feet of soil between the bottom of the field and the seasonal high water table (TP4 was terminated 3.3 feet below the bottom of bed; no groundwater observed but assumed at bottom of hole). The calculation is provided in Attachment B.4. The calculated mound height is 0.19-feet which indicates that the mound will not impact the ability of the basin to dewater within the required 72 hour period.

2.4 Standard 4: Water Quality

The minimum required water quality treatment volume for the proposed residential development is one-inch of runoff times the impervious surface area because the project is located adjacent to a Critical Area (Zone A for surface water supply). The reader is referred to Water Quality Volume Calculations, Water Quality Flow Calculations, and TSS Removal Worksheets provided in Attachments B.5 thru B.7.

Stormwater runoff from the proposed building roof will be treated by drywell infiltration structures which have an 80% TSS removal rate per the MassDEP stormwater management guidelines. No pretreatment is required for clean roof runoff. The proposed roadway and driveway impervious surfaces will be pretreated by deep-sump catchbasins and then treated by subsurface infiltration fields. Additional pretreatment is provided by First Defense proprietary separator treatment devices prior to infiltration field #1 and by an oil grit separator prior to infiltration field #2. The treatment trains have an 80% overall TSS removal rate and minimum 63% pretreatment TSS removal rate prior to infiltration field #1 and 44% prior to infiltration field #2. A minimum 44% pretreatment is required per MassDEP regulations.

Capturing and treating stormwater runoff from the existing roadway stub is not required. The existing impervious surfaces are subject to the stormwater management standards to the maximum extent practicable (Standard 7: Redevelopment). A further discussion of Standard 7 is provided below.

As required by the Stormwater Management Standards, a Long-Term Pollution Prevention Plan is provided in Attachment E. In short, the plan identifies suitable practices for source control and pollution prevention measures.

2.5 Standard 5: Land Uses with Higher Potential Pollutant Loads

In accordance with the Stormwater Management Standards, the proposed residential use is not considered a Land Use with Higher Potential Pollutant Loads. Therefore, this standard does not apply to this project

2.6 Standard 6: Critical Areas

An unnamed intermittent stream exists in the wetland area on the westerly portion of the project site. The stream is tributary to the Longham Reservoir public water supply so a 200-foot wide buffer surrounding the stream is established and referred to as a Zone A. Zone A's are considered Critical Areas under the Stormwater Management Standards. Stormwater discharges near or to any critical areas require specific source control and pollution prevention management. The stormwater management system treatment train is designed for the more stringent 1-inch water quality volume as documented in Standard #4 above. The selected stormwater BMPs are consistent with Table CA2 in the Stormwater Management Handbook. A minimum 44% TSS removal pretreatment is also provided prior to the infiltration BMPs.

2.7 Standard 7: Redevelopment and Other Projects Subject to the Standards only to the Maximum Extent Practicable

The new and expanded areas of impervious surfaces meet all standards for new development. For the existing developed portions of the property (the existing roadway stub from Thaxton Road) the TSS removal standard is not met. It is not possible to capture and convey stormwater from this existing impervious area into the proposed drainage system for treatment due to the location and topography. Stormwater runoff will continue to drain into the Thaxton Road right-of-way and street drainage system where some TSS removal occurs.

2.8 Standard 8: Construction Period Pollution Prevention and Erosion and Sediment Control

Consistent with the NPDES Construction General Permit requirements, a Stormwater Pollution Prevention Plan (SWPPP) is to be prepared for any project resulting in over 1-acre of land disturbance. The proposed project will disturb approximately 1.75-acres of land. In accordance with the Massachusetts Stormwater Management Standards and the NPDES General Permit, a SWPPP will be prepared prior to land disturbance commencing. A copy will be provided to the City Engineering Department as part of the City Erosion Control permit.

2.9 Standard 9: Operation and Maintenance Plan

An Operations & Maintenance plan has been provided in Attachment F. A Homeowners Association will be responsible for the operation and maintenance of the roadway drainage system (catchbasin, First Defense treatment device, and infiltration field). Drywells and pretreatment devices installed on individual lots will be the maintained by the individual property owners.

2.10 Standard 10: Illicit Discharges

The submitted Long-Term Pollution Prevention Plan (Attachment D) specifies measures

to prevent illicit discharges from entering the stormwater management system. Source control and response plans are also specified to prevent illicit discharges from being conveyed through the stormwater management system.

Consistent with the Massachusetts Stormwater Handbook, a signed Illicit Discharge Compliance Statement prior to discharging stormwater to the post-construction stormwater BMP's. A draft copy of the Illicit Discharge Statement is provided in attachment G.

3.0 SUMMARY

The proposed drainage system and site development plans for the proposed development conforms to the City of Beverly Stormwater Management Ordinance and MassDEP Stormwater Management Regulations. The proposed drainage system will treat and remove TSS and other pollutants throughout the project area, recharge groundwater, and minimize erosion. Proper construction and operation and maintenance of the proposed drainage system are critical to its long-term performance. To that end, an Operations and Maintenance Plan and Long-Term Pollution Prevention Plan have been prepared and will be instituted.

ATTACHMENT B

STORMWATER
COMPUTATIONS

B.1) Rip Rap Discharge Design Calculations

B.2) Recharge Volume & BMP Design Calculations

B.3) Drawdown Analysis

B.4) Mounding Calculation

B.5) Water Quality Volume Calculation

B.6) Water Quality Flow Rate Calculation

B.7) TSS Removal Calculation Worksheet

Griffin Engineering Group, LLC
495 Cabot Street, 2nd Floor
Beverly, MA 01915

Phone: 978-927-5111; Fax: 978-927-5103

RIP RAP DISCHARGE DESIGN CALCULATIONS

Job Name: Thaxton Heights Road
Job No: 1729
Date 2/20/2019
Designer J. Blanchette, PE
Checked By: R. Griffin, PE

BROAD-CRESTED WEIR CALCULATION FOR LEVEL SPREADER

Equations H=(Q/CL)^2/3
H =Head Above Crest (ft)
Q = Discharge from 100-year storm (cfs)
C = Weir Coefficient (Use 3)
L = Weir Length (ft)
Area=L x H
Velocity = Q/Area =

	Q (cfs)	L (ft)	H (ft)	Area (sf)	Velocity (ft/sec)	Result
Outfall 1	2.61	18	0.13	2.39	1.09	OK

Note: Allowable Velocity for Mulch Ground Cover is 1 to 2 ft/sec.

STONE SIZE

Equation d50 = Do x 0.020 x (Do/ TW) x (Q/Do^2.5)^1.33
d50 = Diameter of average Stone Size (ft)
Do = Pipe diameter (ft)
TW = Tailwater depth (ft)
Q= Pipe discharge (cfs)

Do =	1	ft	
TW =	1.5	ft	Note: Level Spreader Depth is 18"
Q=	2.61	cfs	
d50=	0.05	ft	
	0.6	in	**Use Min. 6"**

Max. Stone Size = 1.5 x d50 = 9 in
Min. Thickness = 1.5 x Max = 13.5 in

Griffin Engineering Group, LLC
495 Cabot Street, 2nd Floor
Beverly, MA 01915

Phone: 978-927-5111; Fax: 978-927-5103

RECHARGE VOLUME & BMP DESIGN CALCULATIONS

Job Name: Thaxton Heights Road
Job No: 1729
Date 2/20/2019
Designer J. Blanchette, PE
Checked By: R. Griffin, PE

Hydraulic Soil Group "B"
Note: Site Soil Group is a mix of "B" & "C". For simplicity, calcs are done using "B" soil group which yields the greater recharge volume.
Target Depth Factor 0.35 inches x New Impervious Surfaces

	Impervious Surfaces (sf)	Min. Recharge Vol. Req'd (cf)	Recharge Vol. Provided (cf)	Proposed Recharge Device
P1	1,656	48	0	None. Redevelopment. Reduced in Imp.
P2a	7,535	220	645	Infil. Field #1 - Stormtech Chambers*
P2b	2,056	60	378	(2) 1,000 Gal. Drywells
P2c	2,453	72	293	Infil. Field #2 - (2) 1,000 Gal Drywells**
P2d	4,568	133	756	(2) 1,000 Gal. Drywells per Lot (4 total)
P2e	84	2	0	None***
	18,352	535	2,072	

BMP VOLUME SIZING CALCULATIONS:

DRYWELL (Two 1,000 gal. Precast Units)

Excavation Volume = 12.5' W x 14.5' L x 3.5' H =	634	cf
Drywell Outside Volume = 5.67' W x 10.5' L x 3' H =	179	cf
Stone Vol. = Excavation Vol. - 2x Drywell Outside Vol. =	276	cf
Storage Vol. in Stone (40% porosity) =	110	cf
Storage Vol. in Drywell = 1000 gal. / 7.48 gal. per cf =	134	cf
Total Static Storage Volume =	378	cf

*Infiltration Field #1 Static Volume Below Bottom Orifice (See HydrCAD Calc Provided)

**Infiltration Field #2 relief outlet invert is 2-feet above bottom of chamber. The reduced volume is calcuated.

***Not all impervious surfaces are directed to recharge BMPs (Subcatchment P2e). Ratio of total site impervious area to impervious area draining to recharge facilities is 18352/(18352-84)=1.005. Adjusted minimum recharge volume is 535 cf x 1.005 = 538 cf. Adequate recharge is provided.

Summary for Pond IF1: Infil. Field #1

Inflow Area = 28,535 sf, 33.61% Impervious, Inflow Depth = 0.27"
Inflow = 0.11 cfs @ 12.29 hrs, Volume= 645 cf
Outflow = 0.00 cfs @ 24.64 hrs, Volume= 1 cf, Atten= 100%, Lag= 741.4 min
Primary = 0.00 cfs @ 24.64 hrs, Volume= 1 cf

Routing by Dyn-Stor-Ind method, Time Span= 0.00-30.00 hrs, dt= 0.01 hrs / 3
Peak Elev= 104.55' @ 24.64 hrs Surf.Area= 1,018 sf Storage= 645 cf
Flood Elev= 107.00' Surf.Area= 1,018 sf Storage= 2,123 cf

Storage Volume Provided Below Bottom Orifice

Plug-Flow detention time= 895.8 min calculated for 1 cf (0% of inflow)
Center-of-Mass det. time= 700.5 min (1,612.5 - 912.0)

Volume	Invert	Avail.Storage	Storage Description
#1A	103.50'	959 cf	**30.00'W x 33.92'L x 3.50'H Field A** 3,562 cf Overall - 1,163 cf Embedded = 2,398 cf x 40.0% Voids
#2A	104.00'	1,120 cf	**ADS_StormTech SC-740** x 24 Inside #1 Effective Size= 44.6"W x 30.0"H => 6.45 sf x 7.12'L = 45.9 cf Overall Size= 51.0"W x 30.0"H x 7.56'L with 0.44' Overlap Row Length Adjustment= +0.44' x 6.45 sf x 6 rows
#3	105.50'	23 cf	**12.0" Round Pipe Storage** Inside #1 L= 29.5'
#4	104.00'	20 cf	**12.0" Round Pipe Storage** Inside #1 L= 26.0'
		2,123 cf	Total Available Storage

Storage Group A created with Chamber Wizard

Device	Routing	Invert	Outlet Devices
#1	Primary	104.55'	**4.0" Vert. Orifice/Grate** C= 0.600
#2	Primary	106.25'	**4.0' long Sharp-Crested Rectangular Weir** 2 End Contraction(s)

Primary OutFlow Max=0.00 cfs @ 24.64 hrs HW=104.55' TW=0.00' (Dynamic Tailwater)
└─**1=Orifice/Grate** (Orifice Controls 0.00 cfs @ 0.22 fps)
└─**2=Sharp-Crested Rectangular Weir** (Controls 0.00 cfs)

Griffin Engineering Group, LLC
495 Cabot Street, 2nd Floor
Beverly, MA 01915

Phone: 978-927-5111; Fax: 978-927-5103

DRAWDOWN ANALYSIS

Job Name: Thaxton Heights Road
Job No: 1729
Date 2/20/2019
Designer J. Blanchette, PE
Checked By: R. Griffin, PE

DRAWDOWN CALCULATION:
Equation: Drawdown = D / IR (hrs)
D = Depth of Water in Structure (in)
IR = Infiltration Rate* (in/hr)

	D	IR*	Drawdown
Infil. Field #1	12.6	1.02	**12**
Infil. Field #2	24	1.02	**24**
Roof Drywells	30	1.02	**29**

* Rawls Rates Used (See Note 1)

MassDEP requires drawdown to be less than 72 hours -> **OK**

Notes:
1) Soil conditions varied between Sandy Loam and Loamy Sand. Sandy Loam Rawls Rate was conservatively used for this analysis.
2) Infitration Field #1 bottom is Elev. 103.5, Orifice Elev. is 104.55 (required drawdown depth is 12.6")
3) Infiltation Field #2 chambers storage depth below relief outlet is 24" (see detail)
2) Dywell and Inf. Field #2 chambers storage depth is 30" (see detail)

view cart check out

GroundwaterSoftware.com

Home
Equipment
Software
Equipment Rentals
Newsletter
Calculator
Kids' Corner
Contact
Feedback

Search Products
Go

GroundwaterSoftware.com
520 Chicopee Row
Groton, MA, 01450
Tel: (978) 502-6001
Fax: (978) 477-0250
E-mail Us Here

February 20, 2019

You can also perform mounding calculations with graphical display using:

Hydrus Saturated/Unsaturated Flow & Transport Model

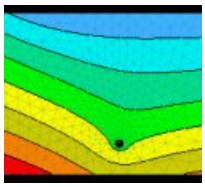

GroundwaterSoftware.com

Calculator 9 - Groundwater Mounding Calculator

GROUNDWATER MOUND UNDER A RECTANGULAR RECHARGE AREA

Using the Hantush (1967) Derivation

Back to Calculators

The equation representing the groundwater mound beneath a rectangular recharge area is given by:

$$h_m^2 - h_i^2 = (2w/K)vtS^*((0.5L/(\sqrt{4vt})),(0.5W/(\sqrt{4vt})))$$

where:

$$v = K\bar{b}/\varepsilon$$

$$\bar{b} = 0.5(h_i(0) + h(t))$$

where h_m is the maximum height of the mound; h_i is the initial height of the water table; w is the recharge or percolation rate; K is the hydraulic conductivity; t is the time of interest; L and W are the length and width of the rectangular recharge area, and ε is the specific yield of the aquifer. S* is an integral equation given by:

$$S^*(\alpha,\beta) = \int_0^1 \mathrm{erf}\left(\frac{\alpha}{\sqrt{\tau}}\right) \bullet \mathrm{erf}\left(\frac{\beta}{\sqrt{\tau}}\right) d\tau$$

This equation is estimated in the calculator by using a table of values given by Hantush (1967).

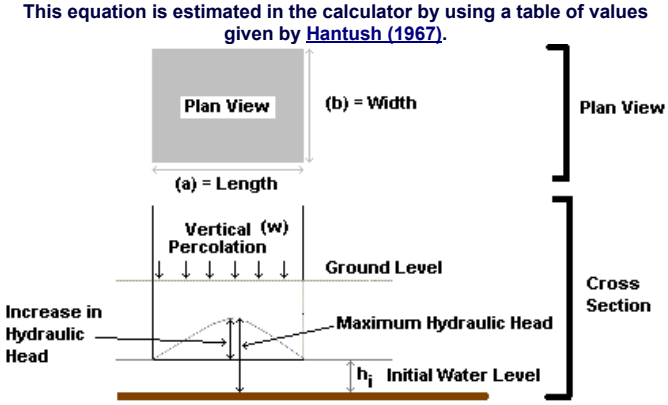

GROUNDWATER MOUND UNDER A RECTANGULAR RECHARGE AREA

Using the Hantush (1967) Derivation

Inputs

w (Percolation Rate): 2.04 **[L/T]**
K (Hydraulic Conductivity): 4 **[L/T]**
S (Specific Yield): 22 **[-]**
t (Time): 2 **[T]**
h_i (Initial Saturated Thickness): .1 **[L]**
a (Length of Recharge Area): 30 **[L]**
b (Width of Recharge Area): 34 **[L]**

****KEEP UNITS CONSISTENT****

Calculate

GRIFFIN ENGINEERING INPUT NOTES:
Sandy Loam Rawles Rate = 1.02 in/hr
Sandy Loam k = 14.11 um/sec
Time = 2 days
(Assumed Storm + Drawdown Time)
Initial Saturation = 0.1 ft
(No Groundwater Observed in Test Pits)

Results

****Note that because of estimations of an integral function, this is an estimate****

Maximum hydraulic head: 0.28545451 **[L]**
Increase in hydraulic head: 0.18545451 **[L]**

Hantush, M.S.(1967). *Growth and Decay of Groundwater-Mounds in Response to Uniform Percolation*, Water Resources Research vol. 3, no.1, pp 227-234.

Example:

What is the maximum mounding at the water table if 1000 liters/day of water is discharged on an area 3 x 4 m after 2 days (all water infiltrates). Given a hydraulic conductivity of 1 x10^{-6} m/s, and specific yield of 0.01 and an initial saturated thickness of 2 m.

Your results should yield a maximum hydraulic head of approximately 3.3 m and an increase in hydraulic head of 1.3 m.

What might have gone wrong?

- converting from 1000 liters/day to m/day. Convert to m3/day using 1000 liters/m3, then divide by area to get the m/day of water infiltrating. This value should be approximately 0.08 m/day

-converting the hydraulic conductivity to units of m/day. This value should be approximately 0.086

Summary

Inputs
w = 0.08 m/day, K = 0.086m/day, S=0.01, t = 2 days, hi = 2 m, a = 3m, b= 4 m

Results

Maximum hydraulic head = 3.3 m
Increase in hydraulic head = 1.3 m

Griffin Engineering Group, LLC
495 Cabot Street, 2nd Floor
Beverly, MA 01915

Phone: 978-927-5111; Fax: 978-927-5103

WATER QUALITY VOLUME CALCULATIONS

Job Name: Thaxton Heights Road
Job No: 1729
Date 2/20/2019
Designer J. Blanchette, PE
Checked By: R. Griffin, PE

WATER QUALITY VOLUME AND TSS REMOVAL CALCULATION

	Impervious Surfaces (sf)	Treatment Depth (in)	Min. WQV (cf)	Volume Provided (cf)	Treatment Device Provided	TSS Removal
P1	1,656	1.0	138	0	None. Redevelopment. Reduced Imp.	0%
P2a	7,535	1.0	628	645	Infil. Field #1 - Stormtech Chambers	80%
P2b	2,056	1.0	171	378	(2) 1,000 Gal. Drywells	80%
P2c	2,453	1.0	204	293	Infil. Field #2 - (2) 1,000 Gal Drywells	80%
P2d	4,568	1.0	381	756	(2) 1,000 Gal. Drywells per Lot (4 total)	80%
P2e	84	1.0	7	0	None. DeMinimis	0%

Notes
1) WQV = Water Quality Volume
2) 1" Treatment Depth Required for Critical Areas (Zone A)
3) Refer to attached TSS Removal Calculation Worksheets for %TSS removal for each treatment train.
4) See Recharge Calculations for Drywell & Infiltration Fields Provided Volumes.

Calculation

Min. WQV = Imp. Area x Treatment Depth x 1-foot/12-inches

Griffin Engineering Group, LLC
100 Cummings Center, Suite 224G
P.O. Box 7061
Beverly, MA 01915
Phone: 978-927-5111; Fax: 978-927-5103

WATER QULITY FLOW RATE CALCULATION

Job Name:	Thaxton Heights Road
Job No:	1729
Date	2/20/2019
Designer	J. Blanchette, PE
Checked By:	R. Griffin, PE

PROPRIETARY SEPARATORS

Water Quatily Structure (WQS)

Unit Type - FD-3HC First Defense By HydroInternational

Water Quatily Flow (WQF)Calculation $Q_{1.0}$ = (qu)(A)(WQV)

Water Quality Volume =	1.0	cf	(First 1 inch of Runoff)
Impervious Area =	7,535	sf	
Area (A) =	0.0002703	sq. miles	
Time of Concentraton =	0.27	hours	(from HydroCAD)
Unit Peak Discharge (qu) =	614	csm/in	
Equivalent WQF (Q1.0) =	0.17	cfs	
TSS Removal Efficiency =	>50%*		

*NJDEP Certified for TSS Treatment (50% Removal) for Flow Rates up to 0.84 cfs

INSTRUCTIONS:
1. In BMP Column, click on Blue Cell to Activate Drop Down Menu
2. Select BMP from Drop Down Menu
3. After BMP is selected, TSS Removal and other Columns are automatically completed.

Version 1, Automated: Mar. 4, 2008

Location: Sub. P2a - To Infiltration Field #1

TSS Removal Calculation Worksheet

B BMP[1]	C TSS Removal Rate[1]	D Starting TSS Load*	E Amount Removed (C*D)	F Remaining Load (D-E)
Deep Sump and Hooded Catch Basin	**0.25**	**1.00**	**0.25**	**0.75**
First Defense **Proprietary Treatment Practice**	**0.50**	**0.75**	**0.375**	**0.375**
	0.00	**0.375**	**0.00**	**0.375**
	0.00	**0.375**	**0.00**	**0.375**
	0.00	**0.375**	**0.00**	**0.375**

Total TSS Removal = 63%

Separate Form Needs to be Completed for Each Outlet or BMP Train

Project: **Thaxton Heights**
Prepared By: **J. Blanchette**
Date: **2/20/2019**

*Equals remaining load from previous BMP (E) which enters the BMP

Non-automated TSS Calculation Sheet must be used if Proprietary BMP Proposed
1. From MassDEP Stormwater Handbook Vol. 1

Mass. Dept. of Environmental Protection

INSTRUCTIONS:
1. In BMP Column, click on Blue Cell to Activate Drop Down Menu
2. Select BMP from Drop Down Menu
3. After BMP is selected, TSS Removal and other Columns are automatically completed.

Version 1, Automated: Mar. 4, 2008

Location: Sub. P2c - To Infiltration Field #2

TSS Removal Calculation Worksheet

B BMP[1]	C TSS Removal Rate[1]	D Starting TSS Load*	E Amount Removed (C*D)	F Remaining Load (D-E)
Deep Sump and Hooded Catch Basin	**0.25**	**1.00**	**0.25**	**0.75**
Oil Grit Separator	**0.25**	**0.75**	**0.19**	**0.56**
	0.00	**0.56**	**0.00**	**0.56**
	0.00	**0.56**	**0.00**	**0.56**
	0.00	**0.56**	**0.00**	**0.56**

Total TSS Removal = 44%

Separate Form Needs to be Completed for Each Outlet or BMP Train

Project: **Thaxton Heights**
Prepared By: **J. Blanchette**
Date: **2/20/2019**

*Equals remaining load from previous BMP (E) which enters the BMP

Non-automated TSS Calculation Sheet must be used if Proprietary BMP Proposed
1. From MassDEP Stormwater Handbook Vol. 1

Mass. Dept. of Environmental Protection

INSTRUCTIONS:
1. In BMP Column, click on Blue Cell to Activate Drop Down Menu
2. Select BMP from Drop Down Menu
3. After BMP is selected, TSS Removal and other Columns are automatically completed.

Version 1, Automated: Mar. 4, 2008

Location: Sub. P2a &P2c - Pavement To Infiltration Fields

TSS Removal Calculation Worksheet

B BMP[1]	C TSS Removal Rate[1]	D Starting TSS Load*	E Amount Removed (C*D)	F Remaining Load (D-E)
Subsurface Infiltration Structure	**0.80**	**1.00**	**0.80**	**0.20**
	0.00	**0.20**	**0.00**	**0.20**
	0.00	**0.20**	**0.00**	**0.20**
	0.00	**0.20**	**0.00**	**0.20**
	0.00	**0.20**	**0.00**	**0.20**

Total TSS Removal = 80%

Separate Form Needs to be Completed for Each Outlet or BMP Train

Project: **Thaxton Heights**
Prepared By: **J. Blanchette**
Date: **2/20/2019**

*Equals remaining load from previous BMP (E) which enters the BMP

Non-automated TSS Calculation Sheet must be used if Proprietary BMP Proposed
1. From MassDEP Stormwater Handbook Vol. 1

Mass. Dept. of Environmental Protection

INSTRUCTIONS:
1. In BMP Column, click on Blue Cell to Activate Drop Down Menu
2. Select BMP from Drop Down Menu
3. After BMP is selected, TSS Removal and other Columns are automatically completed.

Version 1, Automated: Mar. 4, 2008

Location: Sub. P2b & P2d - Building Roofs to Drywells

TSS Removal Calculation Worksheet

B BMP[1]	C TSS Removal Rate[1]	D Starting TSS Load*	E Amount Removed (C*D)	F Remaining Load (D-E)
Dry Well	**0.80**	**1.00**	**0.80**	**0.20**
	0.00	**0.20**	**0.00**	**0.20**
	0.00	**0.20**	**0.00**	**0.20**
	0.00	**0.20**	**0.00**	**0.20**
	0.00	**0.20**	**0.00**	**0.20**

Total TSS Removal = **80%**

Separate Form Needs to be Completed for Each Outlet or BMP Train

Project: **Thaxton Heights**
Prepared By: **J. Blanchette**
Date: **2/20/2019**

*Equals remaining load from previous BMP (E) which enters the BMP

Non-automated TSS Calculation Sheet must be used if Proprietary BMP Proposed
1. From MassDEP Stormwater Handbook Vol. 1

Mass. Dept. of Environmental Protection

ATTACHMENT C

DRAINAGE
CALCULATIONS

(2-, 10-, 25-, 100-YEAR
STORM EVENTS)

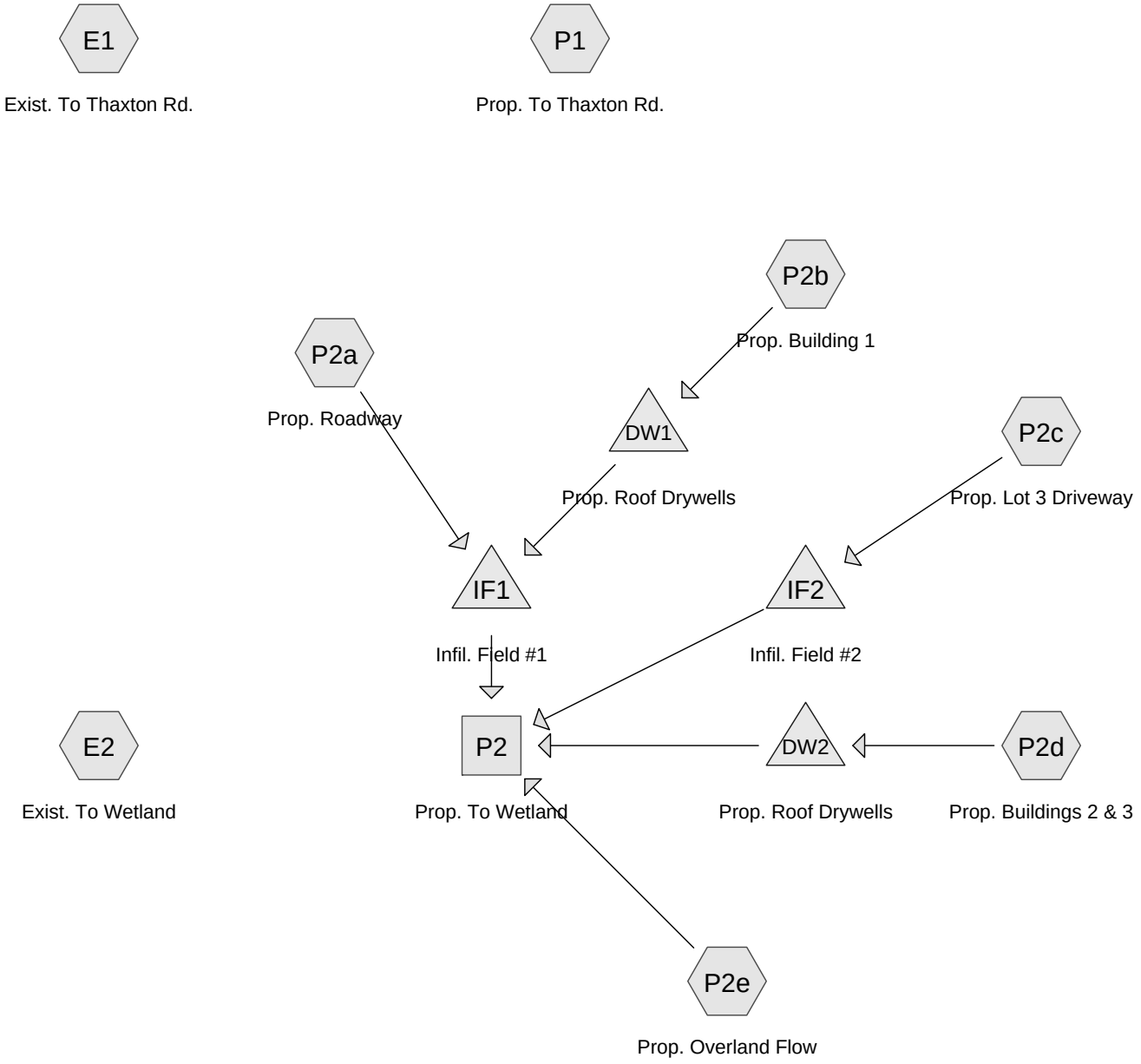

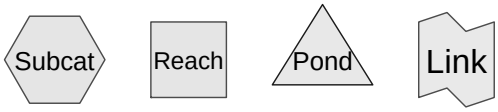

Routing Diagram for McNiff-Thaxton
Prepared by Griffin Engineering Group, LLC, Printed 3/5/2019
HydroCAD® 10.00 s/n 01316 © 2013 HydroCAD Software Solutions LLC

Time span=0.00-30.00 hrs, dt=0.01 hrs, 3001 points x 3
Runoff by SCS TR-20 method, UH=SCS, Weighted-CN
Reach routing by Dyn-Stor-Ind method - Pond routing by Dyn-Stor-Ind method

Subcatchment E1: Exist. To Thaxton Rd. Runoff Area=3,284 sf 55.45% Impervious Runoff Depth=1.75"
Tc=6.0 min CN=86 Runoff=0.15 cfs 479 cf

Subcatchment E2: Exist. To Wetland Runoff Area=80,441 sf 0.00% Impervious Runoff Depth=0.82"
Flow Length=415' Tc=19.3 min CN=71 Runoff=1.08 cfs 5,487 cf

Subcatchment P1: Prop. To Thaxton Rd. Runoff Area=3,240 sf 51.11% Impervious Runoff Depth=1.67"
Tc=6.0 min CN=85 Runoff=0.15 cfs 452 cf

Subcatchment P2a: Prop. Roadway Runoff Area=26,479 sf 28.46% Impervious Runoff Depth=1.08"
Flow Length=306' Tc=16.1 min CN=76 Runoff=0.54 cfs 2,390 cf

Subcatchment P2b: Prop. Building 1 Runoff Area=2,056 sf 100.00% Impervious Runoff Depth=2.87"
Tc=6.0 min CN=98 Runoff=0.14 cfs 491 cf

Subcatchment P2c: Prop. Lot 3 Driveway Runoff Area=5,967 sf 41.11% Impervious Runoff Depth=1.20"
Tc=6.0 min CN=78 Runoff=0.19 cfs 597 cf

Subcatchment P2d: Prop. Buildings 2 & 3 Runoff Area=4,568 sf 100.00% Impervious Runoff Depth=2.87"
Tc=6.0 min CN=98 Runoff=0.32 cfs 1,092 cf

Subcatchment P2e: Prop. Overland Flow Runoff Area=41,416 sf 0.20% Impervious Runoff Depth=0.92"
Flow Length=139' Tc=8.4 min CN=73 Runoff=0.87 cfs 3,173 cf

Reach P2: Prop. To Wetland Inflow=0.87 cfs 4,054 cf
Outflow=0.87 cfs 4,054 cf

Pond DW1: Prop. Roof Drywells Peak Elev=114.76' Storage=278 cf Inflow=0.14 cfs 491 cf
Discarded=0.00 cfs 368 cf Primary=0.00 cfs 0 cf Outflow=0.00 cfs 368 cf

Pond DW2: Prop. Roof Drywells Peak Elev=94.07' Storage=642 cf Inflow=0.32 cfs 1,092 cf
Discarded=0.01 cfs 745 cf Primary=0.00 cfs 0 cf Outflow=0.01 cfs 745 cf

Pond IF1: Infil. Field #1 Peak Elev=104.83' Storage=857 cf Inflow=0.54 cfs 2,390 cf
Discarded=0.02 cfs 1,602 cf Primary=0.14 cfs 787 cf Outflow=0.16 cfs 2,390 cf

Pond IF2: Infil. Field #2 Peak Elev=101.06' Storage=319 cf Inflow=0.19 cfs 597 cf
Discarded=0.00 cfs 298 cf Primary=0.01 cfs 93 cf Outflow=0.02 cfs 391 cf

Total Runoff Area = 167,451 sf Runoff Volume = 14,161 cf Average Runoff Depth = 1.01"
87.95% Pervious = 147,278 sf 12.05% Impervious = 20,173 sf

Summary for Subcatchment E1: Exist. To Thaxton Rd.

Runoff = 0.15 cfs @ 12.09 hrs, Volume= 479 cf, Depth= 1.75"

Runoff by SCS TR-20 method, UH=SCS, Weighted-CN, Time Span= 0.00-30.00 hrs, dt= 0.01 hrs
Type III 24-hr 2-yr Rainfall=3.10"

	Area (sf)	CN	Description
*	1,821	98	Pavement
	1,463	70	Woods, Good, HSG C
	3,284	86	Weighted Average
	1,463		44.55% Pervious Area
	1,821		55.45% Impervious Area

Tc (min)	Length (feet)	Slope (ft/ft)	Velocity (ft/sec)	Capacity (cfs)	Description
6.0					**Direct Entry, Min. 6 Minutes**

Summary for Subcatchment E2: Exist. To Wetland

Runoff = 1.08 cfs @ 12.29 hrs, Volume= 5,487 cf, Depth= 0.82"

Runoff by SCS TR-20 method, UH=SCS, Weighted-CN, Time Span= 0.00-30.00 hrs, dt= 0.01 hrs
Type III 24-hr 2-yr Rainfall=3.10"

Area (sf)	CN	Description
2,530	61	>75% Grass cover, Good, HSG B
18,461	74	>75% Grass cover, Good, HSG C
59,450	70	Woods, Good, HSG C
80,441	71	Weighted Average
80,441		100.00% Pervious Area

Tc (min)	Length (feet)	Slope (ft/ft)	Velocity (ft/sec)	Capacity (cfs)	Description
15.8	100	0.0450	0.11		**Sheet Flow, Woods - Sheet Flow** Woods: Light underbrush n= 0.400 P2= 3.10"
3.5	315	0.0888	1.49		**Shallow Concentrated Flow, Woods - Conc.Flow** Woodland Kv= 5.0 fps
19.3	415	Total			

Summary for Subcatchment P1: Prop. To Thaxton Rd.

Runoff = 0.15 cfs @ 12.09 hrs, Volume= 452 cf, Depth= 1.67"

Runoff by SCS TR-20 method, UH=SCS, Weighted-CN, Time Span= 0.00-30.00 hrs, dt= 0.01 hrs
Type III 24-hr 2-yr Rainfall=3.10"

	Area (sf)	CN	Description
*	1,656	98	Pavement
	400	74	>75% Grass cover, Good, HSG C
	1,184	70	Woods, Good, HSG C
	3,240	85	Weighted Average
	1,584		48.89% Pervious Area
	1,656		51.11% Impervious Area

Tc (min)	Length (feet)	Slope (ft/ft)	Velocity (ft/sec)	Capacity (cfs)	Description
6.0					**Direct Entry, Min. 6 Minutes**

Summary for Subcatchment P2a: Prop. Roadway

Runoff = 0.54 cfs @ 12.23 hrs, Volume= 2,390 cf, Depth= 1.08"

Runoff by SCS TR-20 method, UH=SCS, Weighted-CN, Time Span= 0.00-30.00 hrs, dt= 0.01 hrs
Type III 24-hr 2-yr Rainfall=3.10"

	Area (sf)	CN	Description
*	7,535	98	Pavement
	9,834	61	>75% Grass cover, Good, HSG B
	6,625	74	>75% Grass cover, Good, HSG C
	2,485	70	Woods, Good, HSG C
	26,479	76	Weighted Average
	18,944		71.54% Pervious Area
	7,535		28.46% Impervious Area

Tc (min)	Length (feet)	Slope (ft/ft)	Velocity (ft/sec)	Capacity (cfs)	Description
4.6	25	0.0600	0.09		**Sheet Flow, Woods - Sheet Flow** Woods: Light underbrush n= 0.400 P2= 3.10"
8.7	75	0.0400	0.14		**Sheet Flow, Grass-Sheet Flow** Grass: Dense n= 0.240 P2= 3.10"
2.8	206	0.0300	1.21		**Shallow Concentrated Flow, Grass - Conc. Flow** Short Grass Pasture Kv= 7.0 fps
16.1	306	Total			

Summary for Subcatchment P2b: Prop. Building 1

Runoff = 0.14 cfs @ 12.08 hrs, Volume= 491 cf, Depth= 2.87"

Runoff by SCS TR-20 method, UH=SCS, Weighted-CN, Time Span= 0.00-30.00 hrs, dt= 0.01 hrs
Type III 24-hr 2-yr Rainfall=3.10"

	Area (sf)	CN	Description
*	2,056	98	Building Roof
	2,056		100.00% Impervious Area

Tc (min)	Length (feet)	Slope (ft/ft)	Velocity (ft/sec)	Capacity (cfs)	Description
6.0					**Direct Entry, Min. 6 Minutes**

Summary for Subcatchment P2c: Prop. Lot 3 Driveway

Runoff = 0.19 cfs @ 12.09 hrs, Volume= 597 cf, Depth= 1.20"

Runoff by SCS TR-20 method, UH=SCS, Weighted-CN, Time Span= 0.00-30.00 hrs, dt= 0.01 hrs
Type III 24-hr 2-yr Rainfall=3.10"

	Area (sf)	CN	Description
*	2,453	98	Driveway
	2,468	61	>75% Grass cover, Good, HSG B
	1,046	74	>75% Grass cover, Good, HSG C
	5,967	78	Weighted Average
	3,514		58.89% Pervious Area
	2,453		41.11% Impervious Area

Tc (min)	Length (feet)	Slope (ft/ft)	Velocity (ft/sec)	Capacity (cfs)	Description
6.0					**Direct Entry, Min. 6 Minutes**

Summary for Subcatchment P2d: Prop. Buildings 2 & 3

Runoff = 0.32 cfs @ 12.08 hrs, Volume= 1,092 cf, Depth= 2.87"

Runoff by SCS TR-20 method, UH=SCS, Weighted-CN, Time Span= 0.00-30.00 hrs, dt= 0.01 hrs
Type III 24-hr 2-yr Rainfall=3.10"

	Area (sf)	CN	Description
*	4,568	98	Building Roof
	4,568		100.00% Impervious Area

Tc (min)	Length (feet)	Slope (ft/ft)	Velocity (ft/sec)	Capacity (cfs)	Description
6.0					**Direct Entry, Min. 6 Minutes**

Summary for Subcatchment P2e: Prop. Overland Flow

Runoff = 0.87 cfs @ 12.13 hrs, Volume= 3,173 cf, Depth= 0.92"

Runoff by SCS TR-20 method, UH=SCS, Weighted-CN, Time Span= 0.00-30.00 hrs, dt= 0.01 hrs
Type III 24-hr 2-yr Rainfall=3.10"

	Area (sf)	CN	Description
*	84	98	Walkway
	1,242	61	>75% Grass cover, Good, HSG B
	35,420	74	>75% Grass cover, Good, HSG C
	4,670	70	Woods, Good, HSG C
	41,416	73	Weighted Average
	41,332		99.80% Pervious Area
	84		0.20% Impervious Area

Tc (min)	Length (feet)	Slope (ft/ft)	Velocity (ft/sec)	Capacity (cfs)	Description
6.7	100	0.1400	0.25		**Sheet Flow, Grass-Sheet Flow** Grass: Dense n= 0.240 P2= 3.10"
1.7	39	0.2500	0.38		**Sheet Flow, Grass- Sheet Flow** Grass: Short n= 0.150 P2= 3.10"
8.4	139	Total			

Summary for Reach P2: Prop. To Wetland

Inflow Area = 80,486 sf, 20.74% Impervious, Inflow Depth = 0.60" for 2-yr event
Inflow = 0.87 cfs @ 12.13 hrs, Volume= 4,054 cf
Outflow = 0.87 cfs @ 12.13 hrs, Volume= 4,054 cf, Atten= 0%, Lag= 0.0 min

Routing by Dyn-Stor-Ind method, Time Span= 0.00-30.00 hrs, dt= 0.01 hrs / 3

Summary for Pond DW1: Prop. Roof Drywells

Inflow Area = 2,056 sf,100.00% Impervious, Inflow Depth = 2.87" for 2-yr event
Inflow = 0.14 cfs @ 12.08 hrs, Volume= 491 cf
Outflow = 0.00 cfs @ 9.66 hrs, Volume= 368 cf, Atten= 97%, Lag= 0.0 min
Discarded = 0.00 cfs @ 9.66 hrs, Volume= 368 cf
Primary = 0.00 cfs @ 0.00 hrs, Volume= 0 cf

Routing by Dyn-Stor-Ind method, Time Span= 0.00-30.00 hrs, dt= 0.01 hrs / 3
Peak Elev= 114.76' @ 15.82 hrs Surf.Area= 181 sf Storage= 278 cf

Plug-Flow detention time= 406.4 min calculated for 368 cf (75% of inflow)
Center-of-Mass det. time= 320.4 min (1,077.5 - 757.1)

Volume	Invert	Avail.Storage	Storage Description
#1	112.50'	118 cf	**12.50'W x 14.50'L x 3.50'H Excavation** 634 cf Overall - 339 cf Embedded = 295 cf x 40.0% Voids
#2	113.00'	298 cf	**5.67'W x 10.50'L x 2.50'H Two 1,000 Gal. Drywell** x 2 Inside #1 339 cf Overall - 3.0" Wall Thickness = 298 cf
#3	115.50'	5 cf	**2.00'D x 1.50'H Vertical Cone/Cylinder**
#4	117.00'	1,250 cf	**Custom Stage Data (Prismatic)** Listed below (Recalc)
		1,671 cf	Total Available Storage

Elevation (feet)	Surf.Area (sq-ft)	Inc.Store (cubic-feet)	Cum.Store (cubic-feet)
117.00	2	0	0
117.25	10,000	1,250	1,250

Device	Routing	Invert	Outlet Devices
#1	Primary	117.00'	**20.0" Horiz. Orifice/Grate** C= 0.600 in 20.0" Grate Limited to weir flow at low heads
#2	Discarded	112.50'	**1.020 in/hr Exfiltration over Surface area** Phase-In= 0.01'

Discarded OutFlow Max=0.00 cfs @ 9.66 hrs HW=112.55' (Free Discharge)
└**2=Exfiltration** (Exfiltration Controls 0.00 cfs)

Primary OutFlow Max=0.00 cfs @ 0.00 hrs HW=112.50' TW=103.50' (Dynamic Tailwater)
└**1=Orifice/Grate** (Controls 0.00 cfs)

Summary for Pond DW2: Prop. Roof Drywells

Inflow Area = 4,568 sf,100.00% Impervious, Inflow Depth = 2.87" for 2-yr event
Inflow = 0.32 cfs @ 12.08 hrs, Volume= 1,092 cf
Outflow = 0.01 cfs @ 9.36 hrs, Volume= 745 cf, Atten= 97%, Lag= 0.0 min
Discarded = 0.01 cfs @ 9.36 hrs, Volume= 745 cf
Primary = 0.00 cfs @ 0.00 hrs, Volume= 0 cf

Routing by Dyn-Stor-Ind method, Time Span= 0.00-30.00 hrs, dt= 0.01 hrs / 3
Peak Elev= 94.07' @ 16.08 hrs Surf.Area= 363 sf Storage= 642 cf

Plug-Flow detention time= 408.7 min calculated for 745 cf (68% of inflow)
Center-of-Mass det. time= 312.4 min (1,069.4 - 757.1)

Volume	Invert	Avail.Storage	Storage Description
#1	91.50'	236 cf	**12.50'W x 14.50'L x 3.50'H Excavation** x 2 1,269 cf Overall - 679 cf Embedded = 590 cf x 40.0% Voids
#2	92.00'	595 cf	**5.67'W x 10.50'L x 2.50'H Two 1,000 Gal. Drywells** x 4 Inside #1 679 cf Overall - 3.0" Wall Thickness = 595 cf
#3	94.50'	9 cf	**2.00'D x 1.50'H Vertical Cone/Cylinder** x 2
#4	96.00'	1,250 cf	**Custom Stage Data (Prismatic)** Listed below (Recalc)
		2,091 cf	Total Available Storage

Elevation (feet)	Surf.Area (sq-ft)	Inc.Store (cubic-feet)	Cum.Store (cubic-feet)
96.00	2	0	0
96.25	10,000	1,250	1,250

Device	Routing	Invert	Outlet Devices
#1	Primary	96.00'	**20.0" Horiz. Orifice/Grate X 2.00** C= 0.600 in 20.0" Grate Limited to weir flow at low heads
#2	Discarded	91.50'	**1.020 in/hr Exfiltration over Surface area** Phase-In= 0.01'

Discarded OutFlow Max=0.01 cfs @ 9.36 hrs HW=91.55' (Free Discharge)
└─**2=Exfiltration** (Exfiltration Controls 0.01 cfs)

Primary OutFlow Max=0.00 cfs @ 0.00 hrs HW=91.50' TW=0.00' (Dynamic Tailwater)
└─**1=Orifice/Grate** (Controls 0.00 cfs)

Summary for Pond IF1: Infil. Field #1

Inflow Area =	28,535 sf,	33.61% Impervious,	Inflow Depth =	1.00"	for 2-yr event
Inflow =	0.54 cfs @	12.23 hrs,	Volume=	2,390 cf	
Outflow =	0.16 cfs @	12.74 hrs,	Volume=	2,390 cf,	Atten= 70%, Lag= 30.3 min
Discarded =	0.02 cfs @	11.78 hrs,	Volume=	1,602 cf	
Primary =	0.14 cfs @	12.74 hrs,	Volume=	787 cf	

Routing by Dyn-Stor-Ind method, Time Span= 0.00-30.00 hrs, dt= 0.01 hrs / 3
Peak Elev= 104.83' @ 12.74 hrs Surf.Area= 1,018 sf Storage= 857 cf
Flood Elev= 107.00' Surf.Area= 1,018 sf Storage= 2,123 cf

Plug-Flow detention time= 231.7 min calculated for 2,390 cf (100% of inflow)
Center-of-Mass det. time= 231.7 min (1,098.5 - 866.8)

Volume	Invert	Avail.Storage	Storage Description
#1A	103.50'	959 cf	**30.00'W x 33.92'L x 3.50'H Field A** 3,562 cf Overall - 1,163 cf Embedded = 2,398 cf x 40.0% Voids
#2A	104.00'	1,120 cf	**ADS_StormTech SC-740** x 24 Inside #1 Effective Size= 44.6"W x 30.0"H => 6.45 sf x 7.12'L = 45.9 cf Overall Size= 51.0"W x 30.0"H x 7.56'L with 0.44' Overlap Row Length Adjustment= +0.44' x 6.45 sf x 6 rows
#3	105.50'	23 cf	**12.0" Round Pipe Storage** Inside #1 L= 29.5'
#4	104.00'	20 cf	**12.0" Round Pipe Storage** Inside #1 L= 26.0'
		2,123 cf	Total Available Storage

Storage Group A created with Chamber Wizard

Device	Routing	Invert	Outlet Devices
#1	Primary	104.55'	**4.0" Vert. Orifice/Grate** C= 0.600
#2	Primary	106.25'	**4.0' long Sharp-Crested Rectangular Weir** 2 End Contraction(s)
#3	Discarded	103.50'	**1.020 in/hr Exfiltration over Surface area** Phase-In= 0.01'

Discarded OutFlow Max=0.02 cfs @ 11.78 hrs HW=103.54' (Free Discharge)
└─**3=Exfiltration** (Exfiltration Controls 0.02 cfs)

Primary OutFlow Max=0.14 cfs @ 12.74 hrs HW=104.83' TW=0.00' (Dynamic Tailwater)
├─**1=Orifice/Grate** (Orifice Controls 0.14 cfs @ 1.79 fps)
└─**2=Sharp-Crested Rectangular Weir** (Controls 0.00 cfs)

Summary for Pond IF2: Infil. Field #2

Inflow Area =	5,967 sf, 41.11% Impervious, Inflow Depth = 1.20" for 2-yr event				
Inflow =	0.19 cfs @	12.09 hrs,	Volume=	597 cf	
Outflow =	0.02 cfs @	13.75 hrs,	Volume=	391 cf,	Atten= 92%, Lag= 99.2 min
Discarded =	0.00 cfs @	11.41 hrs,	Volume=	298 cf	
Primary =	0.01 cfs @	13.75 hrs,	Volume=	93 cf	

Routing by Dyn-Stor-Ind method, Time Span= 0.00-30.00 hrs, dt= 0.01 hrs / 3
Peak Elev= 101.06' @ 13.75 hrs Surf.Area= 181 sf Storage= 319 cf

Plug-Flow detention time= 403.0 min calculated for 391 cf (66% of inflow)
Center-of-Mass det. time= 293.9 min (1,144.9 - 850.9)

Volume	Invert	Avail.Storage	Storage Description
#1	98.50'	118 cf	**12.50'W x 14.50'L x 3.50'H Excavation** 634 cf Overall - 339 cf Embedded = 295 cf x 40.0% Voids
#2	99.00'	298 cf	**5.67'W x 10.50'L x 2.50'H Two 1,000 Gal. Drywells** x 2 Inside #1 339 cf Overall - 3.0" Wall Thickness = 298 cf
		416 cf	Total Available Storage

Device	Routing	Invert	Outlet Devices
#1	Primary	101.00'	**6.0" Round Culvert** L= 45.0' CPP, square edge headwall, Ke= 0.500 Inlet / Outlet Invert= 101.00' / 98.50' S= 0.0556 '/' Cc= 0.900 n= 0.010 PVC, smooth interior, Flow Area= 0.20 sf
#2	Discarded	98.50'	**1.020 in/hr Exfiltration over Surface area** Phase-In= 0.01'

Discarded OutFlow Max=0.00 cfs @ 11.41 hrs HW=98.54' (Free Discharge)
└**2=Exfiltration** (Exfiltration Controls 0.00 cfs)

Primary OutFlow Max=0.01 cfs @ 13.75 hrs HW=101.06' TW=0.00' (Dynamic Tailwater)
└**1=Culvert** (Inlet Controls 0.01 cfs @ 0.84 fps)

Time span=0.00-30.00 hrs, dt=0.01 hrs, 3001 points x 3
Runoff by SCS TR-20 method, UH=SCS, Weighted-CN
Reach routing by Dyn-Stor-Ind method - Pond routing by Dyn-Stor-Ind method

Subcatchment E1: Exist. To Thaxton Rd. Runoff Area=3,284 sf 55.45% Impervious Runoff Depth=3.00"
Tc=6.0 min CN=86 Runoff=0.26 cfs 822 cf

Subcatchment E2: Exist. To Wetland Runoff Area=80,441 sf 0.00% Impervious Runoff Depth=1.75"
Flow Length=415' Tc=19.3 min CN=71 Runoff=2.51 cfs 11,707 cf

Subcatchment P1: Prop. To Thaxton Rd. Runoff Area=3,240 sf 51.11% Impervious Runoff Depth=2.91"
Tc=6.0 min CN=85 Runoff=0.25 cfs 785 cf

Subcatchment P2a: Prop. Roadway Runoff Area=26,479 sf 28.46% Impervious Runoff Depth=2.13"
Flow Length=306' Tc=16.1 min CN=76 Runoff=1.11 cfs 4,700 cf

Subcatchment P2b: Prop. Building 1 Runoff Area=2,056 sf 100.00% Impervious Runoff Depth=4.26"
Tc=6.0 min CN=98 Runoff=0.21 cfs 731 cf

Subcatchment P2c: Prop. Lot 3 Driveway Runoff Area=5,967 sf 41.11% Impervious Runoff Depth=2.29"
Tc=6.0 min CN=78 Runoff=0.37 cfs 1,140 cf

Subcatchment P2d: Prop. Buildings 2 & 3 Runoff Area=4,568 sf 100.00% Impervious Runoff Depth=4.26"
Tc=6.0 min CN=98 Runoff=0.46 cfs 1,623 cf

Subcatchment P2e: Prop. Overland Flow Runoff Area=41,416 sf 0.20% Impervious Runoff Depth=1.90"
Flow Length=139' Tc=8.4 min CN=73 Runoff=1.91 cfs 6,543 cf

Reach P2: Prop. To Wetland Inflow=1.98 cfs 10,130 cf
Outflow=1.98 cfs 10,130 cf

Pond DW1: Prop. Roof Drywells Peak Elev=117.00' Storage=421 cf Inflow=0.21 cfs 731 cf
Discarded=0.01 cfs 420 cf Primary=0.00 cfs 22 cf Outflow=0.01 cfs 441 cf

Pond DW2: Prop. Roof Drywells Peak Elev=96.02' Storage=846 cf Inflow=0.46 cfs 1,623 cf
Discarded=0.02 cfs 890 cf Primary=0.04 cfs 140 cf Outflow=0.06 cfs 1,031 cf

Pond IF1: Infil. Field #1 Peak Elev=105.74' Storage=1,503 cf Inflow=1.11 cfs 4,721 cf
Discarded=0.02 cfs 1,733 cf Primary=0.43 cfs 2,847 cf Outflow=0.45 cfs 4,580 cf

Pond IF2: Infil. Field #2 Peak Elev=101.29' Storage=351 cf Inflow=0.37 cfs 1,140 cf
Discarded=0.00 cfs 319 cf Primary=0.22 cfs 600 cf Outflow=0.22 cfs 919 cf

Total Runoff Area = 167,451 sf Runoff Volume = 28,050 cf Average Runoff Depth = 2.01"
87.95% Pervious = 147,278 sf 12.05% Impervious = 20,173 sf

Summary for Subcatchment E1: Exist. To Thaxton Rd.

Runoff = 0.26 cfs @ 12.09 hrs, Volume= 822 cf, Depth= 3.00"

Runoff by SCS TR-20 method, UH=SCS, Weighted-CN, Time Span= 0.00-30.00 hrs, dt= 0.01 hrs
Type III 24-hr 10-yr Rainfall=4.50"

	Area (sf)	CN	Description
*	1,821	98	Pavement
	1,463	70	Woods, Good, HSG C
	3,284	86	Weighted Average
	1,463		44.55% Pervious Area
	1,821		55.45% Impervious Area

Tc (min)	Length (feet)	Slope (ft/ft)	Velocity (ft/sec)	Capacity (cfs)	Description
6.0					**Direct Entry, Min. 6 Minutes**

Summary for Subcatchment E2: Exist. To Wetland

Runoff = 2.51 cfs @ 12.28 hrs, Volume= 11,707 cf, Depth= 1.75"

Runoff by SCS TR-20 method, UH=SCS, Weighted-CN, Time Span= 0.00-30.00 hrs, dt= 0.01 hrs
Type III 24-hr 10-yr Rainfall=4.50"

Area (sf)	CN	Description
2,530	61	>75% Grass cover, Good, HSG B
18,461	74	>75% Grass cover, Good, HSG C
59,450	70	Woods, Good, HSG C
80,441	71	Weighted Average
80,441		100.00% Pervious Area

Tc (min)	Length (feet)	Slope (ft/ft)	Velocity (ft/sec)	Capacity (cfs)	Description
15.8	100	0.0450	0.11		**Sheet Flow, Woods - Sheet Flow** Woods: Light underbrush n= 0.400 P2= 3.10"
3.5	315	0.0888	1.49		**Shallow Concentrated Flow, Woods - Conc.Flow** Woodland Kv= 5.0 fps
19.3	415	Total			

Summary for Subcatchment P1: Prop. To Thaxton Rd.

Runoff = 0.25 cfs @ 12.09 hrs, Volume= 785 cf, Depth= 2.91"

Runoff by SCS TR-20 method, UH=SCS, Weighted-CN, Time Span= 0.00-30.00 hrs, dt= 0.01 hrs
Type III 24-hr 10-yr Rainfall=4.50"

	Area (sf)	CN	Description
*	1,656	98	Pavement
	400	74	>75% Grass cover, Good, HSG C
	1,184	70	Woods, Good, HSG C
	3,240	85	Weighted Average
	1,584		48.89% Pervious Area
	1,656		51.11% Impervious Area

Tc (min)	Length (feet)	Slope (ft/ft)	Velocity (ft/sec)	Capacity (cfs)	Description
6.0					**Direct Entry, Min. 6 Minutes**

Summary for Subcatchment P2a: Prop. Roadway

Runoff = 1.11 cfs @ 12.22 hrs, Volume= 4,700 cf, Depth= 2.13"

Runoff by SCS TR-20 method, UH=SCS, Weighted-CN, Time Span= 0.00-30.00 hrs, dt= 0.01 hrs
Type III 24-hr 10-yr Rainfall=4.50"

	Area (sf)	CN	Description
*	7,535	98	Pavement
	9,834	61	>75% Grass cover, Good, HSG B
	6,625	74	>75% Grass cover, Good, HSG C
	2,485	70	Woods, Good, HSG C
	26,479	76	Weighted Average
	18,944		71.54% Pervious Area
	7,535		28.46% Impervious Area

Tc (min)	Length (feet)	Slope (ft/ft)	Velocity (ft/sec)	Capacity (cfs)	Description
4.6	25	0.0600	0.09		**Sheet Flow, Woods - Sheet Flow** Woods: Light underbrush n= 0.400 P2= 3.10"
8.7	75	0.0400	0.14		**Sheet Flow, Grass-Sheet Flow** Grass: Dense n= 0.240 P2= 3.10"
2.8	206	0.0300	1.21		**Shallow Concentrated Flow, Grass - Conc. Flow** Short Grass Pasture Kv= 7.0 fps
16.1	306	Total			

Summary for Subcatchment P2b: Prop. Building 1

Runoff = 0.21 cfs @ 12.08 hrs, Volume= 731 cf, Depth= 4.26"

Runoff by SCS TR-20 method, UH=SCS, Weighted-CN, Time Span= 0.00-30.00 hrs, dt= 0.01 hrs
Type III 24-hr 10-yr Rainfall=4.50"

	Area (sf)	CN	Description
*	2,056	98	Building Roof
	2,056		100.00% Impervious Area

Tc (min)	Length (feet)	Slope (ft/ft)	Velocity (ft/sec)	Capacity (cfs)	Description
6.0					**Direct Entry, Min. 6 Minutes**

Summary for Subcatchment P2c: Prop. Lot 3 Driveway

Runoff = 0.37 cfs @ 12.09 hrs, Volume= 1,140 cf, Depth= 2.29"

Runoff by SCS TR-20 method, UH=SCS, Weighted-CN, Time Span= 0.00-30.00 hrs, dt= 0.01 hrs
Type III 24-hr 10-yr Rainfall=4.50"

	Area (sf)	CN	Description
*	2,453	98	Driveway
	2,468	61	>75% Grass cover, Good, HSG B
	1,046	74	>75% Grass cover, Good, HSG C
	5,967	78	Weighted Average
	3,514		58.89% Pervious Area
	2,453		41.11% Impervious Area

Tc (min)	Length (feet)	Slope (ft/ft)	Velocity (ft/sec)	Capacity (cfs)	Description
6.0					**Direct Entry, Min. 6 Minutes**

Summary for Subcatchment P2d: Prop. Buildings 2 & 3

Runoff = 0.46 cfs @ 12.08 hrs, Volume= 1,623 cf, Depth= 4.26"

Runoff by SCS TR-20 method, UH=SCS, Weighted-CN, Time Span= 0.00-30.00 hrs, dt= 0.01 hrs
Type III 24-hr 10-yr Rainfall=4.50"

	Area (sf)	CN	Description
*	4,568	98	Building Roof
	4,568		100.00% Impervious Area

Tc (min)	Length (feet)	Slope (ft/ft)	Velocity (ft/sec)	Capacity (cfs)	Description
6.0					**Direct Entry, Min. 6 Minutes**

Summary for Subcatchment P2e: Prop. Overland Flow

Runoff = 1.91 cfs @ 12.12 hrs, Volume= 6,543 cf, Depth= 1.90"

Runoff by SCS TR-20 method, UH=SCS, Weighted-CN, Time Span= 0.00-30.00 hrs, dt= 0.01 hrs
Type III 24-hr 10-yr Rainfall=4.50"

	Area (sf)	CN	Description
*	84	98	Walkway
	1,242	61	>75% Grass cover, Good, HSG B
	35,420	74	>75% Grass cover, Good, HSG C
	4,670	70	Woods, Good, HSG C
	41,416	73	Weighted Average
	41,332		99.80% Pervious Area
	84		0.20% Impervious Area

Tc (min)	Length (feet)	Slope (ft/ft)	Velocity (ft/sec)	Capacity (cfs)	Description
6.7	100	0.1400	0.25		**Sheet Flow, Grass-Sheet Flow** Grass: Dense n= 0.240 P2= 3.10"
1.7	39	0.2500	0.38		**Sheet Flow, Grass- Sheet Flow** Grass: Short n= 0.150 P2= 3.10"
8.4	139	Total			

Summary for Reach P2: Prop. To Wetland

Inflow Area = 80,486 sf, 20.74% Impervious, Inflow Depth = 1.51" for 10-yr event
Inflow = 1.98 cfs @ 12.16 hrs, Volume= 10,130 cf
Outflow = 1.98 cfs @ 12.16 hrs, Volume= 10,130 cf, Atten= 0%, Lag= 0.0 min

Routing by Dyn-Stor-Ind method, Time Span= 0.00-30.00 hrs, dt= 0.01 hrs / 3

Summary for Pond DW1: Prop. Roof Drywells

Inflow Area = 2,056 sf,100.00% Impervious, Inflow Depth = 4.26" for 10-yr event
Inflow = 0.21 cfs @ 12.08 hrs, Volume= 731 cf
Outflow = 0.01 cfs @ 13.55 hrs, Volume= 441 cf, Atten= 94%, Lag= 87.9 min
Discarded = 0.01 cfs @ 13.55 hrs, Volume= 420 cf
Primary = 0.00 cfs @ 13.55 hrs, Volume= 22 cf

Routing by Dyn-Stor-Ind method, Time Span= 0.00-30.00 hrs, dt= 0.01 hrs / 3
Peak Elev= 117.00' @ 13.55 hrs Surf.Area= 358 sf Storage= 421 cf

Plug-Flow detention time= 374.8 min calculated for 441 cf (60% of inflow)
Center-of-Mass det. time= 265.5 min (1,015.3 - 749.8)

Volume	Invert	Avail.Storage	Storage Description
#1	112.50'	118 cf	**12.50'W x 14.50'L x 3.50'H Excavation** 634 cf Overall - 339 cf Embedded = 295 cf x 40.0% Voids
#2	113.00'	298 cf	**5.67'W x 10.50'L x 2.50'H Two 1,000 Gal. Drywell** x 2 Inside #1 339 cf Overall - 3.0" Wall Thickness = 298 cf
#3	115.50'	5 cf	**2.00'D x 1.50'H Vertical Cone/Cylinder**
#4	117.00'	1,250 cf	**Custom Stage Data (Prismatic)** Listed below (Recalc)
		1,671 cf	Total Available Storage

Elevation (feet)	Surf.Area (sq-ft)	Inc.Store (cubic-feet)	Cum.Store (cubic-feet)
117.00	2	0	0
117.25	10,000	1,250	1,250

Device	Routing	Invert	Outlet Devices
#1	Primary	117.00'	**20.0" Horiz. Orifice/Grate** C= 0.600 in 20.0" Grate Limited to weir flow at low heads
#2	Discarded	112.50'	**1.020 in/hr Exfiltration over Surface area** Phase-In= 0.01'

Discarded OutFlow Max=0.01 cfs @ 13.55 hrs HW=117.00' (Free Discharge)
└─**2=Exfiltration** (Exfiltration Controls 0.01 cfs)

Primary OutFlow Max=0.00 cfs @ 13.55 hrs HW=117.00' TW=105.00' (Dynamic Tailwater)
└─**1=Orifice/Grate** (Weir Controls 0.00 cfs @ 0.21 fps)

Summary for Pond DW2: Prop. Roof Drywells

Inflow Area = 4,568 sf,100.00% Impervious, Inflow Depth = 4.26" for 10-yr event
Inflow = 0.46 cfs @ 12.08 hrs, Volume= 1,623 cf
Outflow = 0.06 cfs @ 12.61 hrs, Volume= 1,031 cf, Atten= 87%, Lag= 31.4 min
Discarded = 0.02 cfs @ 12.61 hrs, Volume= 890 cf
Primary = 0.04 cfs @ 12.61 hrs, Volume= 140 cf

Routing by Dyn-Stor-Ind method, Time Span= 0.00-30.00 hrs, dt= 0.01 hrs / 3
Peak Elev= 96.02' @ 12.61 hrs Surf.Area= 1,029 sf Storage= 846 cf

Plug-Flow detention time= 334.9 min calculated for 1,031 cf (64% of inflow)
Center-of-Mass det. time= 230.1 min (979.9 - 749.8)

Volume	Invert	Avail.Storage	Storage Description
#1	91.50'	236 cf	**12.50'W x 14.50'L x 3.50'H Excavation** x 2 1,269 cf Overall - 679 cf Embedded = 590 cf x 40.0% Voids
#2	92.00'	595 cf	**5.67'W x 10.50'L x 2.50'H Two 1,000 Gal. Drywells** x 4 Inside #1 679 cf Overall - 3.0" Wall Thickness = 595 cf
#3	94.50'	9 cf	**2.00'D x 1.50'H Vertical Cone/Cylinder** x 2
#4	96.00'	1,250 cf	**Custom Stage Data (Prismatic)** Listed below (Recalc)
		2,091 cf	Total Available Storage

Elevation (feet)	Surf.Area (sq-ft)	Inc.Store (cubic-feet)	Cum.Store (cubic-feet)
96.00	2	0	0
96.25	10,000	1,250	1,250

Device	Routing	Invert	Outlet Devices
#1	Primary	96.00'	**20.0" Horiz. Orifice/Grate X 2.00** C= 0.600 in 20.0" Grate Limited to weir flow at low heads
#2	Discarded	91.50'	**1.020 in/hr Exfiltration over Surface area** Phase-In= 0.01'

Discarded OutFlow Max=0.02 cfs @ 12.61 hrs HW=96.02' (Free Discharge)
└─**2=Exfiltration** (Exfiltration Controls 0.02 cfs)

Primary OutFlow Max=0.04 cfs @ 12.61 hrs HW=96.02' TW=0.00' (Dynamic Tailwater)
└─**1=Orifice/Grate** (Weir Controls 0.04 cfs @ 0.42 fps)

Summary for Pond IF1: Infil. Field #1

Inflow Area =	28,535 sf,	33.61% Impervious,	Inflow Depth =	1.99"	for 10-yr event
Inflow =	1.11 cfs @	12.22 hrs,	Volume=	4,721 cf	
Outflow =	0.45 cfs @	12.62 hrs,	Volume=	4,580 cf,	Atten= 60%, Lag= 23.5 min
Discarded =	0.02 cfs @	10.94 hrs,	Volume=	1,733 cf	
Primary =	0.43 cfs @	12.62 hrs,	Volume=	2,847 cf	

Routing by Dyn-Stor-Ind method, Time Span= 0.00-30.00 hrs, dt= 0.01 hrs / 3
Peak Elev= 105.74' @ 12.62 hrs Surf.Area= 1,018 sf Storage= 1,503 cf
Flood Elev= 107.00' Surf.Area= 1,018 sf Storage= 2,123 cf

Plug-Flow detention time= 142.7 min calculated for 4,579 cf (97% of inflow)
Center-of-Mass det. time= 125.9 min (972.7 - 846.8)

Volume	Invert	Avail.Storage	Storage Description
#1A	103.50'	959 cf	**30.00'W x 33.92'L x 3.50'H Field A** 3,562 cf Overall - 1,163 cf Embedded = 2,398 cf x 40.0% Voids
#2A	104.00'	1,120 cf	**ADS_StormTech SC-740** x 24 Inside #1 Effective Size= 44.6"W x 30.0"H => 6.45 sf x 7.12'L = 45.9 cf Overall Size= 51.0"W x 30.0"H x 7.56'L with 0.44' Overlap Row Length Adjustment= +0.44' x 6.45 sf x 6 rows
#3	105.50'	23 cf	**12.0" Round Pipe Storage** Inside #1 L= 29.5'
#4	104.00'	20 cf	**12.0" Round Pipe Storage** Inside #1 L= 26.0'
		2,123 cf	Total Available Storage

Storage Group A created with Chamber Wizard

Device	Routing	Invert	Outlet Devices
#1	Primary	104.55'	**4.0" Vert. Orifice/Grate** C= 0.600
#2	Primary	106.25'	**4.0' long Sharp-Crested Rectangular Weir** 2 End Contraction(s)
#3	Discarded	103.50'	**1.020 in/hr Exfiltration over Surface area** Phase-In= 0.01'

Discarded OutFlow Max=0.02 cfs @ 10.94 hrs HW=103.54' (Free Discharge)
└─**3=Exfiltration** (Exfiltration Controls 0.02 cfs)

Primary OutFlow Max=0.43 cfs @ 12.62 hrs HW=105.74' TW=0.00' (Dynamic Tailwater)
├─**1=Orifice/Grate** (Orifice Controls 0.43 cfs @ 4.87 fps)
└─**2=Sharp-Crested Rectangular Weir** (Controls 0.00 cfs)

Summary for Pond IF2: Infil. Field #2

Inflow Area =	5,967 sf, 41.11% Impervious, Inflow Depth = 2.29" for 10-yr event				
Inflow =	0.37 cfs @	12.09 hrs,	Volume=	1,140 cf	
Outflow =	0.22 cfs @	12.20 hrs,	Volume=	919 cf,	Atten= 40%, Lag= 6.8 min
Discarded =	0.00 cfs @	10.31 hrs,	Volume=	319 cf	
Primary =	0.22 cfs @	12.20 hrs,	Volume=	600 cf	

Routing by Dyn-Stor-Ind method, Time Span= 0.00-30.00 hrs, dt= 0.01 hrs / 3
Peak Elev= 101.29' @ 12.20 hrs Surf.Area= 181 sf Storage= 351 cf

Plug-Flow detention time= 201.4 min calculated for 919 cf (81% of inflow)
Center-of-Mass det. time= 124.4 min (956.4 - 831.9)

Volume	Invert	Avail.Storage	Storage Description
#1	98.50'	118 cf	**12.50'W x 14.50'L x 3.50'H Excavation** 634 cf Overall - 339 cf Embedded = 295 cf x 40.0% Voids
#2	99.00'	298 cf	**5.67'W x 10.50'L x 2.50'H Two 1,000 Gal. Drywells** x 2 Inside #1 339 cf Overall - 3.0" Wall Thickness = 298 cf
		416 cf	Total Available Storage

Device	Routing	Invert	Outlet Devices
#1	Primary	101.00'	**6.0" Round Culvert** L= 45.0' CPP, square edge headwall, Ke= 0.500 Inlet / Outlet Invert= 101.00' / 98.50' S= 0.0556 '/' Cc= 0.900 n= 0.010 PVC, smooth interior, Flow Area= 0.20 sf
#2	Discarded	98.50'	**1.020 in/hr Exfiltration over Surface area** Phase-In= 0.01'

Discarded OutFlow Max=0.00 cfs @ 10.31 hrs HW=98.54' (Free Discharge)
└─**2=Exfiltration** (Exfiltration Controls 0.00 cfs)

Primary OutFlow Max=0.22 cfs @ 12.20 hrs HW=101.29' TW=0.00' (Dynamic Tailwater)
└─**1=Culvert** (Inlet Controls 0.22 cfs @ 1.83 fps)

Time span=0.00-30.00 hrs, dt=0.01 hrs, 3001 points x 3
Runoff by SCS TR-20 method, UH=SCS, Weighted-CN
Reach routing by Dyn-Stor-Ind method - Pond routing by Dyn-Stor-Ind method

Subcatchment E1: Exist. To Thaxton Rd. Runoff Area=3,284 sf 55.45% Impervious Runoff Depth=3.84"
Tc=6.0 min CN=86 Runoff=0.33 cfs 1,051 cf

Subcatchment E2: Exist. To Wetland Runoff Area=80,441 sf 0.00% Impervious Runoff Depth=2.42"
Flow Length=415' Tc=19.3 min CN=71 Runoff=3.54 cfs 16,245 cf

Subcatchment P1: Prop. To Thaxton Rd. Runoff Area=3,240 sf 51.11% Impervious Runoff Depth=3.74"
Tc=6.0 min CN=85 Runoff=0.32 cfs 1,010 cf

Subcatchment P2a: Prop. Roadway Runoff Area=26,479 sf 28.46% Impervious Runoff Depth=2.87"
Flow Length=306' Tc=16.1 min CN=76 Runoff=1.51 cfs 6,330 cf

Subcatchment P2b: Prop. Building 1 Runoff Area=2,056 sf 100.00% Impervious Runoff Depth=5.16"
Tc=6.0 min CN=98 Runoff=0.25 cfs 885 cf

Subcatchment P2c: Prop. Lot 3 Driveway Runoff Area=5,967 sf 41.11% Impervious Runoff Depth=3.05"
Tc=6.0 min CN=78 Runoff=0.49 cfs 1,519 cf

Subcatchment P2d: Prop. Buildings 2 & 3 Runoff Area=4,568 sf 100.00% Impervious Runoff Depth=5.16"
Tc=6.0 min CN=98 Runoff=0.55 cfs 1,965 cf

Subcatchment P2e: Prop. Overland Flow Runoff Area=41,416 sf 0.20% Impervious Runoff Depth=2.60"
Flow Length=139' Tc=8.4 min CN=73 Runoff=2.65 cfs 8,967 cf

Reach P2: Prop. To Wetland Inflow=3.30 cfs 14,765 cf
Outflow=3.30 cfs 14,765 cf

Pond DW1: Prop. Roof Drywells Peak Elev=117.02' Storage=428 cf Inflow=0.25 cfs 885 cf
Discarded=0.02 cfs 479 cf Primary=0.05 cfs 104 cf Outflow=0.07 cfs 583 cf

Pond DW2: Prop. Roof Drywells Peak Elev=96.04' Storage=878 cf Inflow=0.55 cfs 1,965 cf
Discarded=0.05 cfs 988 cf Primary=0.15 cfs 360 cf Outflow=0.20 cfs 1,348 cf

Pond IF1: Infil. Field #1 Peak Elev=106.36' Storage=1,859 cf Inflow=1.51 cfs 6,434 cf
Discarded=0.02 cfs 1,793 cf Primary=1.02 cfs 4,471 cf Outflow=1.05 cfs 6,264 cf

Pond IF2: Infil. Field #2 Peak Elev=101.46' Storage=374 cf Inflow=0.49 cfs 1,519 cf
Discarded=0.00 cfs 330 cf Primary=0.44 cfs 967 cf Outflow=0.44 cfs 1,296 cf

Total Runoff Area = 167,451 sf Runoff Volume = 37,972 cf Average Runoff Depth = 2.72"
87.95% Pervious = 147,278 sf 12.05% Impervious = 20,173 sf

Summary for Subcatchment E1: Exist. To Thaxton Rd.

Runoff = 0.33 cfs @ 12.09 hrs, Volume= 1,051 cf, Depth= 3.84"

Runoff by SCS TR-20 method, UH=SCS, Weighted-CN, Time Span= 0.00-30.00 hrs, dt= 0.01 hrs
Type III 24-hr 25-yr Rainfall=5.40"

	Area (sf)	CN	Description
*	1,821	98	Pavement
	1,463	70	Woods, Good, HSG C
	3,284	86	Weighted Average
	1,463		44.55% Pervious Area
	1,821		55.45% Impervious Area

Tc (min)	Length (feet)	Slope (ft/ft)	Velocity (ft/sec)	Capacity (cfs)	Description
6.0					**Direct Entry, Min. 6 Minutes**

Summary for Subcatchment E2: Exist. To Wetland

Runoff = 3.54 cfs @ 12.28 hrs, Volume= 16,245 cf, Depth= 2.42"

Runoff by SCS TR-20 method, UH=SCS, Weighted-CN, Time Span= 0.00-30.00 hrs, dt= 0.01 hrs
Type III 24-hr 25-yr Rainfall=5.40"

Area (sf)	CN	Description
2,530	61	>75% Grass cover, Good, HSG B
18,461	74	>75% Grass cover, Good, HSG C
59,450	70	Woods, Good, HSG C
80,441	71	Weighted Average
80,441		100.00% Pervious Area

Tc (min)	Length (feet)	Slope (ft/ft)	Velocity (ft/sec)	Capacity (cfs)	Description
15.8	100	0.0450	0.11		**Sheet Flow, Woods - Sheet Flow** Woods: Light underbrush n= 0.400 P2= 3.10"
3.5	315	0.0888	1.49		**Shallow Concentrated Flow, Woods - Conc.Flow** Woodland Kv= 5.0 fps
19.3	415	Total			

Summary for Subcatchment P1: Prop. To Thaxton Rd.

Runoff = 0.32 cfs @ 12.09 hrs, Volume= 1,010 cf, Depth= 3.74"

Runoff by SCS TR-20 method, UH=SCS, Weighted-CN, Time Span= 0.00-30.00 hrs, dt= 0.01 hrs
Type III 24-hr 25-yr Rainfall=5.40"

	Area (sf)	CN	Description
*	1,656	98	Pavement
	400	74	>75% Grass cover, Good, HSG C
	1,184	70	Woods, Good, HSG C
	3,240	85	Weighted Average
	1,584		48.89% Pervious Area
	1,656		51.11% Impervious Area

Tc (min)	Length (feet)	Slope (ft/ft)	Velocity (ft/sec)	Capacity (cfs)	Description
6.0					**Direct Entry, Min. 6 Minutes**

Summary for Subcatchment P2a: Prop. Roadway

Runoff = 1.51 cfs @ 12.22 hrs, Volume= 6,330 cf, Depth= 2.87"

Runoff by SCS TR-20 method, UH=SCS, Weighted-CN, Time Span= 0.00-30.00 hrs, dt= 0.01 hrs
Type III 24-hr 25-yr Rainfall=5.40"

	Area (sf)	CN	Description
*	7,535	98	Pavement
	9,834	61	>75% Grass cover, Good, HSG B
	6,625	74	>75% Grass cover, Good, HSG C
	2,485	70	Woods, Good, HSG C
	26,479	76	Weighted Average
	18,944		71.54% Pervious Area
	7,535		28.46% Impervious Area

Tc (min)	Length (feet)	Slope (ft/ft)	Velocity (ft/sec)	Capacity (cfs)	Description
4.6	25	0.0600	0.09		**Sheet Flow, Woods - Sheet Flow** Woods: Light underbrush n= 0.400 P2= 3.10"
8.7	75	0.0400	0.14		**Sheet Flow, Grass-Sheet Flow** Grass: Dense n= 0.240 P2= 3.10"
2.8	206	0.0300	1.21		**Shallow Concentrated Flow, Grass - Conc. Flow** Short Grass Pasture Kv= 7.0 fps
16.1	306	Total			

Summary for Subcatchment P2b: Prop. Building 1

Runoff = 0.25 cfs @ 12.08 hrs, Volume= 885 cf, Depth= 5.16"

Runoff by SCS TR-20 method, UH=SCS, Weighted-CN, Time Span= 0.00-30.00 hrs, dt= 0.01 hrs
Type III 24-hr 25-yr Rainfall=5.40"

	Area (sf)	CN	Description
*	2,056	98	Building Roof
	2,056		100.00% Impervious Area

Tc (min)	Length (feet)	Slope (ft/ft)	Velocity (ft/sec)	Capacity (cfs)	Description
6.0					**Direct Entry, Min. 6 Minutes**

Summary for Subcatchment P2c: Prop. Lot 3 Driveway

Runoff = 0.49 cfs @ 12.09 hrs, Volume= 1,519 cf, Depth= 3.05"

Runoff by SCS TR-20 method, UH=SCS, Weighted-CN, Time Span= 0.00-30.00 hrs, dt= 0.01 hrs
Type III 24-hr 25-yr Rainfall=5.40"

	Area (sf)	CN	Description
*	2,453	98	Driveway
	2,468	61	>75% Grass cover, Good, HSG B
	1,046	74	>75% Grass cover, Good, HSG C
	5,967	78	Weighted Average
	3,514		58.89% Pervious Area
	2,453		41.11% Impervious Area

Tc (min)	Length (feet)	Slope (ft/ft)	Velocity (ft/sec)	Capacity (cfs)	Description
6.0					**Direct Entry, Min. 6 Minutes**

Summary for Subcatchment P2d: Prop. Buildings 2 & 3

Runoff = 0.55 cfs @ 12.08 hrs, Volume= 1,965 cf, Depth= 5.16"

Runoff by SCS TR-20 method, UH=SCS, Weighted-CN, Time Span= 0.00-30.00 hrs, dt= 0.01 hrs
Type III 24-hr 25-yr Rainfall=5.40"

	Area (sf)	CN	Description
*	4,568	98	Building Roof
	4,568		100.00% Impervious Area

Tc (min)	Length (feet)	Slope (ft/ft)	Velocity (ft/sec)	Capacity (cfs)	Description
6.0					**Direct Entry, Min. 6 Minutes**

Summary for Subcatchment P2e: Prop. Overland Flow

Runoff = 2.65 cfs @ 12.12 hrs, Volume= 8,967 cf, Depth= 2.60"

Runoff by SCS TR-20 method, UH=SCS, Weighted-CN, Time Span= 0.00-30.00 hrs, dt= 0.01 hrs
Type III 24-hr 25-yr Rainfall=5.40"

	Area (sf)	CN	Description
*	84	98	Walkway
	1,242	61	>75% Grass cover, Good, HSG B
	35,420	74	>75% Grass cover, Good, HSG C
	4,670	70	Woods, Good, HSG C
	41,416	73	Weighted Average
	41,332		99.80% Pervious Area
	84		0.20% Impervious Area

Tc (min)	Length (feet)	Slope (ft/ft)	Velocity (ft/sec)	Capacity (cfs)	Description
6.7	100	0.1400	0.25		**Sheet Flow, Grass-Sheet Flow** Grass: Dense n= 0.240 P2= 3.10"
1.7	39	0.2500	0.38		**Sheet Flow, Grass- Sheet Flow** Grass: Short n= 0.150 P2= 3.10"
8.4	139	Total			

Summary for Reach P2: Prop. To Wetland

Inflow Area = 80,486 sf, 20.74% Impervious, Inflow Depth = 2.20" for 25-yr event
Inflow = 3.30 cfs @ 12.13 hrs, Volume= 14,765 cf
Outflow = 3.30 cfs @ 12.13 hrs, Volume= 14,765 cf, Atten= 0%, Lag= 0.0 min

Routing by Dyn-Stor-Ind method, Time Span= 0.00-30.00 hrs, dt= 0.01 hrs / 3

Summary for Pond DW1: Prop. Roof Drywells

Inflow Area = 2,056 sf,100.00% Impervious, Inflow Depth = 5.16" for 25-yr event
Inflow = 0.25 cfs @ 12.08 hrs, Volume= 885 cf
Outflow = 0.07 cfs @ 12.42 hrs, Volume= 583 cf, Atten= 72%, Lag= 20.4 min
Discarded = 0.02 cfs @ 12.42 hrs, Volume= 479 cf
Primary = 0.05 cfs @ 12.42 hrs, Volume= 104 cf

Routing by Dyn-Stor-Ind method, Time Span= 0.00-30.00 hrs, dt= 0.01 hrs / 3
Peak Elev= 117.02' @ 12.42 hrs Surf.Area= 961 sf Storage= 428 cf

Plug-Flow detention time= 304.9 min calculated for 583 cf (66% of inflow)
Center-of-Mass det. time= 203.0 min (949.8 - 746.8)

Volume	Invert	Avail.Storage	Storage Description
#1	112.50'	118 cf	**12.50'W x 14.50'L x 3.50'H Excavation** 634 cf Overall - 339 cf Embedded = 295 cf x 40.0% Voids
#2	113.00'	298 cf	**5.67'W x 10.50'L x 2.50'H Two 1,000 Gal. Drywell** x 2 Inside #1 339 cf Overall - 3.0" Wall Thickness = 298 cf
#3	115.50'	5 cf	**2.00'D x 1.50'H Vertical Cone/Cylinder**
#4	117.00'	1,250 cf	**Custom Stage Data (Prismatic)** Listed below (Recalc)
		1,671 cf	Total Available Storage

Elevation (feet)	Surf.Area (sq-ft)	Inc.Store (cubic-feet)	Cum.Store (cubic-feet)
117.00	2	0	0
117.25	10,000	1,250	1,250

Device	Routing	Invert	Outlet Devices
#1	Primary	117.00'	**20.0" Horiz. Orifice/Grate** C= 0.600 in 20.0" Grate Limited to weir flow at low heads
#2	Discarded	112.50'	**1.020 in/hr Exfiltration over Surface area** Phase-In= 0.01'

Discarded OutFlow Max=0.02 cfs @ 12.42 hrs HW=117.02' (Free Discharge)
└**2=Exfiltration** (Exfiltration Controls 0.02 cfs)

Primary OutFlow Max=0.05 cfs @ 12.42 hrs HW=117.02' TW=106.36' (Dynamic Tailwater)
└**1=Orifice/Grate** (Weir Controls 0.05 cfs @ 0.45 fps)

Summary for Pond DW2: Prop. Roof Drywells

Inflow Area = 4,568 sf,100.00% Impervious, Inflow Depth = 5.16" for 25-yr event
Inflow = 0.55 cfs @ 12.08 hrs, Volume= 1,965 cf
Outflow = 0.20 cfs @ 12.33 hrs, Volume= 1,348 cf, Atten= 63%, Lag= 14.5 min
Discarded = 0.05 cfs @ 12.33 hrs, Volume= 988 cf
Primary = 0.15 cfs @ 12.33 hrs, Volume= 360 cf

Routing by Dyn-Stor-Ind method, Time Span= 0.00-30.00 hrs, dt= 0.01 hrs / 3
Peak Elev= 96.04' @ 12.33 hrs Surf.Area= 2,101 sf Storage= 878 cf

Plug-Flow detention time= 273.8 min calculated for 1,348 cf (69% of inflow)
Center-of-Mass det. time= 176.3 min (923.1 - 746.8)

Volume	Invert	Avail.Storage	Storage Description
#1	91.50'	236 cf	**12.50'W x 14.50'L x 3.50'H Excavation** x 2 1,269 cf Overall - 679 cf Embedded = 590 cf x 40.0% Voids
#2	92.00'	595 cf	**5.67'W x 10.50'L x 2.50'H Two 1,000 Gal. Drywells** x 4 Inside #1 679 cf Overall - 3.0" Wall Thickness = 595 cf
#3	94.50'	9 cf	**2.00'D x 1.50'H Vertical Cone/Cylinder** x 2
#4	96.00'	1,250 cf	**Custom Stage Data (Prismatic)** Listed below (Recalc)
		2,091 cf	Total Available Storage

Elevation (feet)	Surf.Area (sq-ft)	Inc.Store (cubic-feet)	Cum.Store (cubic-feet)
96.00	2	0	0
96.25	10,000	1,250	1,250

Device	Routing	Invert	Outlet Devices
#1	Primary	96.00'	**20.0" Horiz. Orifice/Grate X 2.00** C= 0.600 in 20.0" Grate Limited to weir flow at low heads
#2	Discarded	91.50'	**1.020 in/hr Exfiltration over Surface area** Phase-In= 0.01'

Discarded OutFlow Max=0.05 cfs @ 12.33 hrs HW=96.04' (Free Discharge)
└─**2=Exfiltration** (Exfiltration Controls 0.05 cfs)

Primary OutFlow Max=0.15 cfs @ 12.33 hrs HW=96.04' TW=0.00' (Dynamic Tailwater)
└─**1=Orifice/Grate** (Weir Controls 0.15 cfs @ 0.68 fps)

Summary for Pond IF1: Infil. Field #1

Inflow Area =	28,535 sf,	33.61% Impervious,	Inflow Depth =	2.71"	for 25-yr event
Inflow =	1.51 cfs @	12.22 hrs,	Volume=	6,434 cf	
Outflow =	1.05 cfs @	12.43 hrs,	Volume=	6,264 cf,	Atten= 30%, Lag= 12.4 min
Discarded =	0.02 cfs @	10.34 hrs,	Volume=	1,793 cf	
Primary =	1.02 cfs @	12.43 hrs,	Volume=	4,471 cf	

Routing by Dyn-Stor-Ind method, Time Span= 0.00-30.00 hrs, dt= 0.01 hrs / 3
Peak Elev= 106.36' @ 12.43 hrs Surf.Area= 1,018 sf Storage= 1,859 cf
Flood Elev= 107.00' Surf.Area= 1,018 sf Storage= 2,123 cf

Plug-Flow detention time= 113.8 min calculated for 6,262 cf (97% of inflow)
Center-of-Mass det. time= 98.6 min (936.1 - 837.5)

Volume	Invert	Avail.Storage	Storage Description
#1A	103.50'	959 cf	**30.00'W x 33.92'L x 3.50'H Field A** 3,562 cf Overall - 1,163 cf Embedded = 2,398 cf x 40.0% Voids
#2A	104.00'	1,120 cf	**ADS_StormTech SC-740** x 24 Inside #1 Effective Size= 44.6"W x 30.0"H => 6.45 sf x 7.12'L = 45.9 cf Overall Size= 51.0"W x 30.0"H x 7.56'L with 0.44' Overlap Row Length Adjustment= +0.44' x 6.45 sf x 6 rows
#3	105.50'	23 cf	**12.0" Round Pipe Storage** Inside #1 L= 29.5'
#4	104.00'	20 cf	**12.0" Round Pipe Storage** Inside #1 L= 26.0'
		2,123 cf	Total Available Storage

Storage Group A created with Chamber Wizard

Device	Routing	Invert	Outlet Devices
#1	Primary	104.55'	**4.0" Vert. Orifice/Grate** C= 0.600
#2	Primary	106.25'	**4.0' long Sharp-Crested Rectangular Weir** 2 End Contraction(s)
#3	Discarded	103.50'	**1.020 in/hr Exfiltration over Surface area** Phase-In= 0.01'

Discarded OutFlow Max=0.02 cfs @ 10.34 hrs HW=103.54' (Free Discharge)
└─**3=Exfiltration** (Exfiltration Controls 0.02 cfs)

Primary OutFlow Max=1.02 cfs @ 12.43 hrs HW=106.36' TW=0.00' (Dynamic Tailwater)
├─**1=Orifice/Grate** (Orifice Controls 0.54 cfs @ 6.18 fps)
└─**2=Sharp-Crested Rectangular Weir** (Weir Controls 0.48 cfs @ 1.09 fps)

Summary for Pond IF2: Infil. Field #2

Inflow Area =	5,967 sf, 41.11% Impervious, Inflow Depth = 3.05" for 25-yr event				
Inflow =	0.49 cfs @	12.09 hrs, Volume=	1,519 cf		
Outflow =	0.44 cfs @	12.13 hrs, Volume=	1,296 cf, Atten= 10%, Lag= 2.4 min		
Discarded =	0.00 cfs @	9.63 hrs, Volume=	330 cf		
Primary =	0.44 cfs @	12.13 hrs, Volume=	967 cf		

Routing by Dyn-Stor-Ind method, Time Span= 0.00-30.00 hrs, dt= 0.01 hrs / 3
Peak Elev= 101.46' @ 12.13 hrs Surf.Area= 181 sf Storage= 374 cf

Plug-Flow detention time= 154.6 min calculated for 1,296 cf (85% of inflow)
Center-of-Mass det. time= 90.7 min (914.4 - 823.7)

Volume	Invert	Avail.Storage	Storage Description
#1	98.50'	118 cf	**12.50'W x 14.50'L x 3.50'H Excavation** 634 cf Overall - 339 cf Embedded = 295 cf x 40.0% Voids
#2	99.00'	298 cf	**5.67'W x 10.50'L x 2.50'H Two 1,000 Gal. Drywells** x 2 Inside #1 339 cf Overall - 3.0" Wall Thickness = 298 cf
		416 cf	Total Available Storage

Device	Routing	Invert	Outlet Devices
#1	Primary	101.00'	**6.0" Round Culvert** L= 45.0' CPP, square edge headwall, Ke= 0.500 Inlet / Outlet Invert= 101.00' / 98.50' S= 0.0556 '/' Cc= 0.900 n= 0.010 PVC, smooth interior, Flow Area= 0.20 sf
#2	Discarded	98.50'	**1.020 in/hr Exfiltration over Surface area** Phase-In= 0.01'

Discarded OutFlow Max=0.00 cfs @ 9.63 hrs HW=98.54' (Free Discharge)
└─**2=Exfiltration** (Exfiltration Controls 0.00 cfs)

Primary OutFlow Max=0.44 cfs @ 12.13 hrs HW=101.46' TW=0.00' (Dynamic Tailwater)
└─**1=Culvert** (Inlet Controls 0.44 cfs @ 2.31 fps)

Time span=0.00-30.00 hrs, dt=0.01 hrs, 3001 points x 3
Runoff by SCS TR-20 method, UH=SCS, Weighted-CN
Reach routing by Dyn-Stor-Ind method - Pond routing by Dyn-Stor-Ind method

Subcatchment E1: Exist. To Thaxton Rd. Runoff Area=3,284 sf 55.45% Impervious Runoff Depth=4.89"
Tc=6.0 min CN=86 Runoff=0.42 cfs 1,337 cf

Subcatchment E2: Exist. To Wetland Runoff Area=80,441 sf 0.00% Impervious Runoff Depth=3.31"
Flow Length=415' Tc=19.3 min CN=71 Runoff=4.88 cfs 22,166 cf

Subcatchment P1: Prop. To Thaxton Rd. Runoff Area=3,240 sf 51.11% Impervious Runoff Depth=4.78"
Tc=6.0 min CN=85 Runoff=0.41 cfs 1,290 cf

Subcatchment P2a: Prop. Roadway Runoff Area=26,479 sf 28.46% Impervious Runoff Depth=3.82"
Flow Length=306' Tc=16.1 min CN=76 Runoff=2.01 cfs 8,419 cf

Subcatchment P2b: Prop. Building 1 Runoff Area=2,056 sf 100.00% Impervious Runoff Depth=6.26"
Tc=6.0 min CN=98 Runoff=0.30 cfs 1,073 cf

Subcatchment P2c: Prop. Lot 3 Driveway Runoff Area=5,967 sf 41.11% Impervious Runoff Depth=4.02"
Tc=6.0 min CN=78 Runoff=0.64 cfs 2,001 cf

Subcatchment P2d: Prop. Buildings 2 & 3 Runoff Area=4,568 sf 100.00% Impervious Runoff Depth=6.26"
Tc=6.0 min CN=98 Runoff=0.67 cfs 2,383 cf

Subcatchment P2e: Prop. Overland Flow Runoff Area=41,416 sf 0.20% Impervious Runoff Depth=3.51"
Flow Length=139' Tc=8.4 min CN=73 Runoff=3.60 cfs 12,107 cf

Reach P2: Prop. To Wetland Inflow=4.84 cfs 20,797 cf
Outflow=4.84 cfs 20,797 cf

Pond DW1: Prop. Roof Drywells Peak Elev=117.03' Storage=444 cf Inflow=0.30 cfs 1,073 cf
Discarded=0.04 cfs 537 cf Primary=0.11 cfs 222 cf Outflow=0.15 cfs 759 cf

Pond DW2: Prop. Roof Drywells Peak Elev=96.07' Storage=937 cf Inflow=0.67 cfs 2,383 cf
Discarded=0.07 cfs 1,092 cf Primary=0.31 cfs 654 cf Outflow=0.39 cfs 1,745 cf

Pond IF1: Infil. Field #1 Peak Elev=106.48' Storage=1,912 cf Inflow=2.11 cfs 8,641 cf
Discarded=0.02 cfs 1,855 cf Primary=2.00 cfs 6,600 cf Outflow=2.03 cfs 8,455 cf

Pond IF2: Infil. Field #2 Peak Elev=101.67' Storage=392 cf Inflow=0.64 cfs 2,001 cf
Discarded=0.00 cfs 341 cf Primary=0.61 cfs 1,437 cf Outflow=0.62 cfs 1,778 cf

Total Runoff Area = 167,451 sf Runoff Volume = 50,775 cf Average Runoff Depth = 3.64"
87.95% Pervious = 147,278 sf 12.05% Impervious = 20,173 sf

Summary for Subcatchment E1: Exist. To Thaxton Rd.

Runoff = 0.42 cfs @ 12.09 hrs, Volume= 1,337 cf, Depth= 4.89"

Runoff by SCS TR-20 method, UH=SCS, Weighted-CN, Time Span= 0.00-30.00 hrs, dt= 0.01 hrs
Type III 24-hr 100-yr Rainfall=6.50"

	Area (sf)	CN	Description
*	1,821	98	Pavement
	1,463	70	Woods, Good, HSG C
	3,284	86	Weighted Average
	1,463		44.55% Pervious Area
	1,821		55.45% Impervious Area

Tc (min)	Length (feet)	Slope (ft/ft)	Velocity (ft/sec)	Capacity (cfs)	Description
6.0					**Direct Entry, Min. 6 Minutes**

Summary for Subcatchment E2: Exist. To Wetland

Runoff = 4.88 cfs @ 12.27 hrs, Volume= 22,166 cf, Depth= 3.31"

Runoff by SCS TR-20 method, UH=SCS, Weighted-CN, Time Span= 0.00-30.00 hrs, dt= 0.01 hrs
Type III 24-hr 100-yr Rainfall=6.50"

Area (sf)	CN	Description
2,530	61	>75% Grass cover, Good, HSG B
18,461	74	>75% Grass cover, Good, HSG C
59,450	70	Woods, Good, HSG C
80,441	71	Weighted Average
80,441		100.00% Pervious Area

Tc (min)	Length (feet)	Slope (ft/ft)	Velocity (ft/sec)	Capacity (cfs)	Description
15.8	100	0.0450	0.11		**Sheet Flow, Woods - Sheet Flow** Woods: Light underbrush n= 0.400 P2= 3.10"
3.5	315	0.0888	1.49		**Shallow Concentrated Flow, Woods - Conc.Flow** Woodland Kv= 5.0 fps
19.3	415	Total			

Summary for Subcatchment P1: Prop. To Thaxton Rd.

Runoff = 0.41 cfs @ 12.09 hrs, Volume= 1,290 cf, Depth= 4.78"

Runoff by SCS TR-20 method, UH=SCS, Weighted-CN, Time Span= 0.00-30.00 hrs, dt= 0.01 hrs
Type III 24-hr 100-yr Rainfall=6.50"

	Area (sf)	CN	Description
*	1,656	98	Pavement
	400	74	>75% Grass cover, Good, HSG C
	1,184	70	Woods, Good, HSG C
	3,240	85	Weighted Average
	1,584		48.89% Pervious Area
	1,656		51.11% Impervious Area

Tc (min)	Length (feet)	Slope (ft/ft)	Velocity (ft/sec)	Capacity (cfs)	Description
6.0					**Direct Entry, Min. 6 Minutes**

Summary for Subcatchment P2a: Prop. Roadway

Runoff = 2.01 cfs @ 12.22 hrs, Volume= 8,419 cf, Depth= 3.82"

Runoff by SCS TR-20 method, UH=SCS, Weighted-CN, Time Span= 0.00-30.00 hrs, dt= 0.01 hrs
Type III 24-hr 100-yr Rainfall=6.50"

	Area (sf)	CN	Description
*	7,535	98	Pavement
	9,834	61	>75% Grass cover, Good, HSG B
	6,625	74	>75% Grass cover, Good, HSG C
	2,485	70	Woods, Good, HSG C
	26,479	76	Weighted Average
	18,944		71.54% Pervious Area
	7,535		28.46% Impervious Area

Tc (min)	Length (feet)	Slope (ft/ft)	Velocity (ft/sec)	Capacity (cfs)	Description
4.6	25	0.0600	0.09		**Sheet Flow, Woods - Sheet Flow** Woods: Light underbrush n= 0.400 P2= 3.10"
8.7	75	0.0400	0.14		**Sheet Flow, Grass-Sheet Flow** Grass: Dense n= 0.240 P2= 3.10"
2.8	206	0.0300	1.21		**Shallow Concentrated Flow, Grass - Conc. Flow** Short Grass Pasture Kv= 7.0 fps
16.1	306	Total			

Summary for Subcatchment P2b: Prop. Building 1

Runoff = 0.30 cfs @ 12.08 hrs, Volume= 1,073 cf, Depth= 6.26"

Runoff by SCS TR-20 method, UH=SCS, Weighted-CN, Time Span= 0.00-30.00 hrs, dt= 0.01 hrs
Type III 24-hr 100-yr Rainfall=6.50"

	Area (sf)	CN	Description
*	2,056	98	Building Roof
	2,056		100.00% Impervious Area

Tc (min)	Length (feet)	Slope (ft/ft)	Velocity (ft/sec)	Capacity (cfs)	Description
6.0					**Direct Entry, Min. 6 Minutes**

Summary for Subcatchment P2c: Prop. Lot 3 Driveway

Runoff = 0.64 cfs @ 12.09 hrs, Volume= 2,001 cf, Depth= 4.02"

Runoff by SCS TR-20 method, UH=SCS, Weighted-CN, Time Span= 0.00-30.00 hrs, dt= 0.01 hrs
Type III 24-hr 100-yr Rainfall=6.50"

	Area (sf)	CN	Description
*	2,453	98	Driveway
	2,468	61	>75% Grass cover, Good, HSG B
	1,046	74	>75% Grass cover, Good, HSG C
	5,967	78	Weighted Average
	3,514		58.89% Pervious Area
	2,453		41.11% Impervious Area

Tc (min)	Length (feet)	Slope (ft/ft)	Velocity (ft/sec)	Capacity (cfs)	Description
6.0					**Direct Entry, Min. 6 Minutes**

Summary for Subcatchment P2d: Prop. Buildings 2 & 3

Runoff = 0.67 cfs @ 12.08 hrs, Volume= 2,383 cf, Depth= 6.26"

Runoff by SCS TR-20 method, UH=SCS, Weighted-CN, Time Span= 0.00-30.00 hrs, dt= 0.01 hrs
Type III 24-hr 100-yr Rainfall=6.50"

	Area (sf)	CN	Description
*	4,568	98	Building Roof
	4,568		100.00% Impervious Area

Tc (min)	Length (feet)	Slope (ft/ft)	Velocity (ft/sec)	Capacity (cfs)	Description
6.0					**Direct Entry, Min. 6 Minutes**

Summary for Subcatchment P2e: Prop. Overland Flow

Runoff = 3.60 cfs @ 12.12 hrs, Volume= 12,107 cf, Depth= 3.51"

Runoff by SCS TR-20 method, UH=SCS, Weighted-CN, Time Span= 0.00-30.00 hrs, dt= 0.01 hrs
Type III 24-hr 100-yr Rainfall=6.50"

	Area (sf)	CN	Description
*	84	98	Walkway
	1,242	61	>75% Grass cover, Good, HSG B
	35,420	74	>75% Grass cover, Good, HSG C
	4,670	70	Woods, Good, HSG C
	41,416	73	Weighted Average
	41,332		99.80% Pervious Area
	84		0.20% Impervious Area

Tc (min)	Length (feet)	Slope (ft/ft)	Velocity (ft/sec)	Capacity (cfs)	Description
6.7	100	0.1400	0.25		**Sheet Flow, Grass-Sheet Flow** Grass: Dense n= 0.240 P2= 3.10"
1.7	39	0.2500	0.38		**Sheet Flow, Grass- Sheet Flow** Grass: Short n= 0.150 P2= 3.10"
8.4	139	Total			

Summary for Reach P2: Prop. To Wetland

Inflow Area = 80,486 sf, 20.74% Impervious, Inflow Depth = 3.10" for 100-yr event
Inflow = 4.84 cfs @ 12.25 hrs, Volume= 20,797 cf
Outflow = 4.84 cfs @ 12.25 hrs, Volume= 20,797 cf, Atten= 0%, Lag= 0.0 min

Routing by Dyn-Stor-Ind method, Time Span= 0.00-30.00 hrs, dt= 0.01 hrs / 3

Summary for Pond DW1: Prop. Roof Drywells

Inflow Area = 2,056 sf,100.00% Impervious, Inflow Depth = 6.26" for 100-yr event
Inflow = 0.30 cfs @ 12.08 hrs, Volume= 1,073 cf
Outflow = 0.15 cfs @ 12.23 hrs, Volume= 759 cf, Atten= 51%, Lag= 8.8 min
Discarded = 0.04 cfs @ 12.23 hrs, Volume= 537 cf
Primary = 0.11 cfs @ 12.23 hrs, Volume= 222 cf

Routing by Dyn-Stor-Ind method, Time Span= 0.00-30.00 hrs, dt= 0.01 hrs / 3
Peak Elev= 117.03' @ 12.23 hrs Surf.Area= 1,569 sf Storage= 444 cf

Plug-Flow detention time= 251.3 min calculated for 759 cf (71% of inflow)
Center-of-Mass det. time= 156.7 min (900.7 - 744.0)

Volume	Invert	Avail.Storage	Storage Description
#1	112.50'	118 cf	**12.50'W x 14.50'L x 3.50'H Excavation** 634 cf Overall - 339 cf Embedded = 295 cf x 40.0% Voids
#2	113.00'	298 cf	**5.67'W x 10.50'L x 2.50'H Two 1,000 Gal. Drywell** x 2 Inside #1 339 cf Overall - 3.0" Wall Thickness = 298 cf
#3	115.50'	5 cf	**2.00'D x 1.50'H Vertical Cone/Cylinder**
#4	117.00'	1,250 cf	**Custom Stage Data (Prismatic)** Listed below (Recalc)
		1,671 cf	Total Available Storage

Elevation (feet)	Surf.Area (sq-ft)	Inc.Store (cubic-feet)	Cum.Store (cubic-feet)
117.00	2	0	0
117.25	10,000	1,250	1,250

Device	Routing	Invert	Outlet Devices
#1	Primary	117.00'	**20.0" Horiz. Orifice/Grate** C= 0.600 in 20.0" Grate Limited to weir flow at low heads
#2	Discarded	112.50'	**1.020 in/hr Exfiltration over Surface area** Phase-In= 0.01'

Discarded OutFlow Max=0.04 cfs @ 12.23 hrs HW=117.03' (Free Discharge)
└─**2=Exfiltration** (Exfiltration Controls 0.04 cfs)

Primary OutFlow Max=0.11 cfs @ 12.23 hrs HW=117.03' TW=106.42' (Dynamic Tailwater)
└─**1=Orifice/Grate** (Weir Controls 0.11 cfs @ 0.61 fps)

Summary for Pond DW2: Prop. Roof Drywells

Inflow Area = 4,568 sf,100.00% Impervious, Inflow Depth = 6.26" for 100-yr event
Inflow = 0.67 cfs @ 12.08 hrs, Volume= 2,383 cf
Outflow = 0.39 cfs @ 12.19 hrs, Volume= 1,745 cf, Atten= 42%, Lag= 6.6 min
Discarded = 0.07 cfs @ 12.19 hrs, Volume= 1,092 cf
Primary = 0.31 cfs @ 12.19 hrs, Volume= 654 cf

Routing by Dyn-Stor-Ind method, Time Span= 0.00-30.00 hrs, dt= 0.01 hrs / 3
Peak Elev= 96.07' @ 12.19 hrs Surf.Area= 3,137 sf Storage= 937 cf

Plug-Flow detention time= 229.3 min calculated for 1,745 cf (73% of inflow)
Center-of-Mass det. time= 138.8 min (882.7 - 744.0)

Volume	Invert	Avail.Storage	Storage Description
#1	91.50'	236 cf	**12.50'W x 14.50'L x 3.50'H Excavation** x 2 1,269 cf Overall - 679 cf Embedded = 590 cf x 40.0% Voids
#2	92.00'	595 cf	**5.67'W x 10.50'L x 2.50'H Two 1,000 Gal. Drywells** x 4 Inside #1 679 cf Overall - 3.0" Wall Thickness = 595 cf
#3	94.50'	9 cf	**2.00'D x 1.50'H Vertical Cone/Cylinder** x 2
#4	96.00'	1,250 cf	**Custom Stage Data (Prismatic)** Listed below (Recalc)
		2,091 cf	Total Available Storage

Elevation (feet)	Surf.Area (sq-ft)	Inc.Store (cubic-feet)	Cum.Store (cubic-feet)
96.00	2	0	0
96.25	10,000	1,250	1,250

Device	Routing	Invert	Outlet Devices
#1	Primary	96.00'	**20.0" Horiz. Orifice/Grate X 2.00** C= 0.600 in 20.0" Grate Limited to weir flow at low heads
#2	Discarded	91.50'	**1.020 in/hr Exfiltration over Surface area** Phase-In= 0.01'

Discarded OutFlow Max=0.07 cfs @ 12.19 hrs HW=96.07' (Free Discharge)
└─**2=Exfiltration** (Exfiltration Controls 0.07 cfs)

Primary OutFlow Max=0.31 cfs @ 12.19 hrs HW=96.07' TW=0.00' (Dynamic Tailwater)
└─**1=Orifice/Grate** (Weir Controls 0.31 cfs @ 0.86 fps)

Summary for Pond IF1: Infil. Field #1

Inflow Area =	28,535 sf,	33.61% Impervious,	Inflow Depth =	3.63"	for 100-yr event
Inflow =	2.11 cfs @	12.22 hrs,	Volume=	8,641 cf	
Outflow =	2.03 cfs @	12.27 hrs,	Volume=	8,455 cf,	Atten= 4%, Lag= 2.9 min
Discarded =	0.02 cfs @	9.64 hrs,	Volume=	1,855 cf	
Primary =	2.00 cfs @	12.27 hrs,	Volume=	6,600 cf	

Routing by Dyn-Stor-Ind method, Time Span= 0.00-30.00 hrs, dt= 0.01 hrs / 3
Peak Elev= 106.48' @ 12.27 hrs Surf.Area= 1,018 sf Storage= 1,912 cf
Flood Elev= 107.00' Surf.Area= 1,018 sf Storage= 2,123 cf

Plug-Flow detention time= 90.6 min calculated for 8,455 cf (98% of inflow)
Center-of-Mass det. time= 77.9 min (906.5 - 828.7)

Volume	Invert	Avail.Storage	Storage Description
#1A	103.50'	959 cf	**30.00'W x 33.92'L x 3.50'H Field A** 3,562 cf Overall - 1,163 cf Embedded = 2,398 cf x 40.0% Voids
#2A	104.00'	1,120 cf	**ADS_StormTech SC-740** x 24 Inside #1 Effective Size= 44.6"W x 30.0"H => 6.45 sf x 7.12'L = 45.9 cf Overall Size= 51.0"W x 30.0"H x 7.56'L with 0.44' Overlap Row Length Adjustment= +0.44' x 6.45 sf x 6 rows
#3	105.50'	23 cf	**12.0" Round Pipe Storage** Inside #1 L= 29.5'
#4	104.00'	20 cf	**12.0" Round Pipe Storage** Inside #1 L= 26.0'
		2,123 cf	Total Available Storage

Storage Group A created with Chamber Wizard

Device	Routing	Invert	Outlet Devices
#1	Primary	104.55'	**4.0" Vert. Orifice/Grate** C= 0.600
#2	Primary	106.25'	**4.0' long Sharp-Crested Rectangular Weir** 2 End Contraction(s)
#3	Discarded	103.50'	**1.020 in/hr Exfiltration over Surface area** Phase-In= 0.01'

Discarded OutFlow Max=0.02 cfs @ 9.64 hrs HW=103.54' (Free Discharge)
└─**3=Exfiltration** (Exfiltration Controls 0.02 cfs)

Primary OutFlow Max=2.00 cfs @ 12.27 hrs HW=106.48' TW=0.00' (Dynamic Tailwater)
├─**1=Orifice/Grate** (Orifice Controls 0.56 cfs @ 6.40 fps)
└─**2=Sharp-Crested Rectangular Weir** (Weir Controls 1.44 cfs @ 1.57 fps)

Summary for Pond IF2: Infil. Field #2

Inflow Area =	5,967 sf, 41.11% Impervious, Inflow Depth = 4.02" for 100-yr event				
Inflow =	0.64 cfs @	12.09 hrs,	Volume=	2,001 cf	
Outflow =	0.62 cfs @	12.11 hrs,	Volume=	1,778 cf,	Atten= 5%, Lag= 1.5 min
Discarded =	0.00 cfs @	8.94 hrs,	Volume=	341 cf	
Primary =	0.61 cfs @	12.11 hrs,	Volume=	1,437 cf	

Routing by Dyn-Stor-Ind method, Time Span= 0.00-30.00 hrs, dt= 0.01 hrs / 3
Peak Elev= 101.67' @ 12.11 hrs Surf.Area= 181 sf Storage= 392 cf

Plug-Flow detention time= 122.0 min calculated for 1,777 cf (89% of inflow)
Center-of-Mass det. time= 69.5 min (885.3 - 815.8)

Volume	Invert	Avail.Storage	Storage Description
#1	98.50'	118 cf	**12.50'W x 14.50'L x 3.50'H Excavation** 634 cf Overall - 339 cf Embedded = 295 cf x 40.0% Voids
#2	99.00'	298 cf	**5.67'W x 10.50'L x 2.50'H Two 1,000 Gal. Drywells** x 2 Inside #1 339 cf Overall - 3.0" Wall Thickness = 298 cf
		416 cf	Total Available Storage

Device	Routing	Invert	Outlet Devices
#1	Primary	101.00'	**6.0" Round Culvert** L= 45.0' CPP, square edge headwall, Ke= 0.500 Inlet / Outlet Invert= 101.00' / 98.50' S= 0.0556 '/' Cc= 0.900 n= 0.010 PVC, smooth interior, Flow Area= 0.20 sf
#2	Discarded	98.50'	**1.020 in/hr Exfiltration over Surface area** Phase-In= 0.01'

Discarded OutFlow Max=0.00 cfs @ 8.94 hrs HW=98.54' (Free Discharge)
└─**2=Exfiltration** (Exfiltration Controls 0.00 cfs)

Primary OutFlow Max=0.61 cfs @ 12.11 hrs HW=101.67' TW=0.00' (Dynamic Tailwater)
└─**1=Culvert** (Inlet Controls 0.61 cfs @ 3.11 fps)

ATTACHMENT D

SUBCATCHMENT PLAN

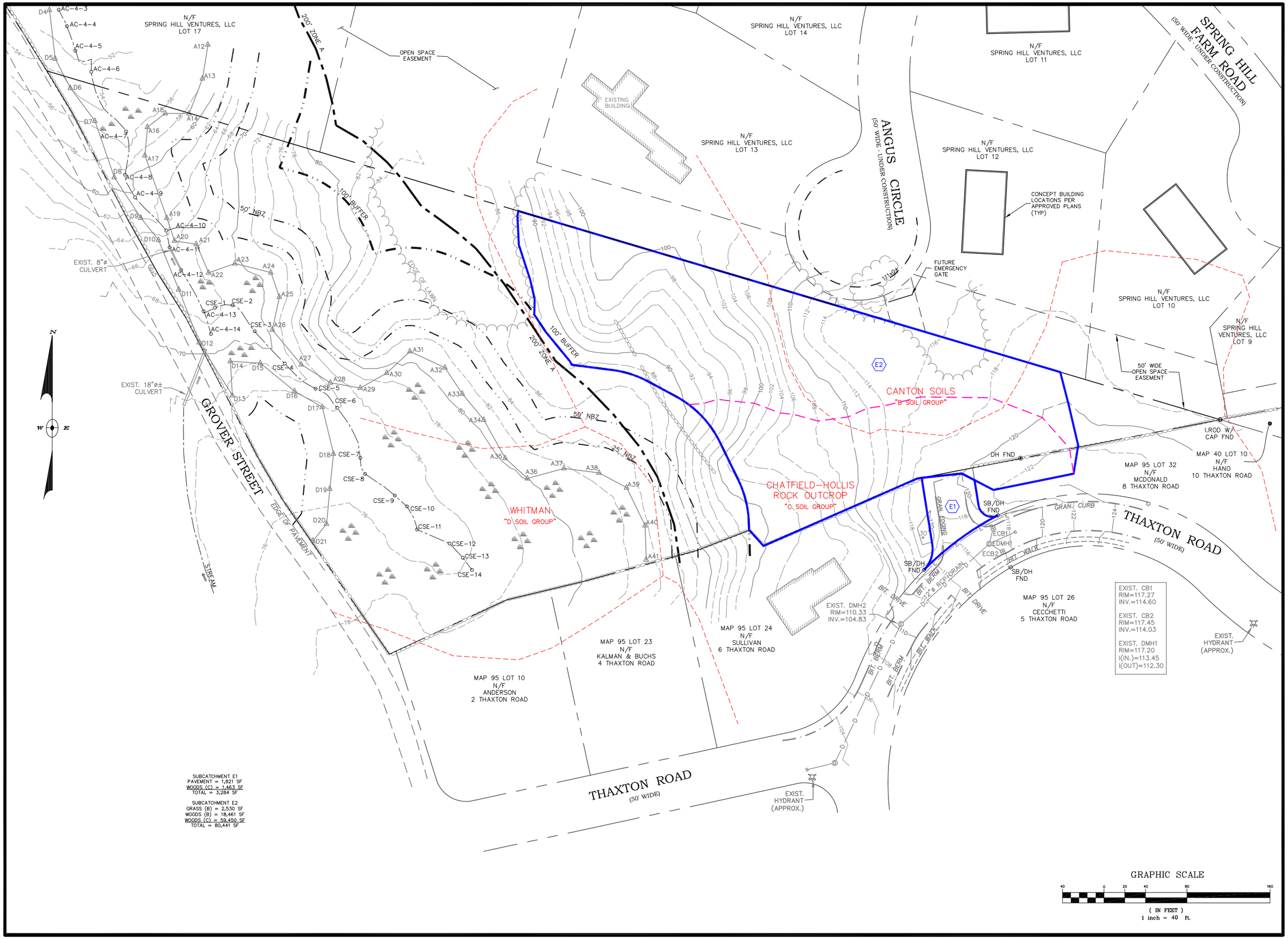

No.	Date	Description

Revisions

Griffin Engineering Group, LLC

495 Cabot Street, 2nd Floor
Beverly, MA 01915

Tel: 978-927-5111
Fax: 978-927-5103

HICKORY STREET
REALTY TRUST
THAXTON ROAD
BEVERLY, MA

THAXTON HEIGHTS RD.

EXISTING
SUBCATCHMENT PLAN

Scale: 1"=40'

Job No.: 1729

File Name: p/p/mc/th

Date: 8/10/18

D-1

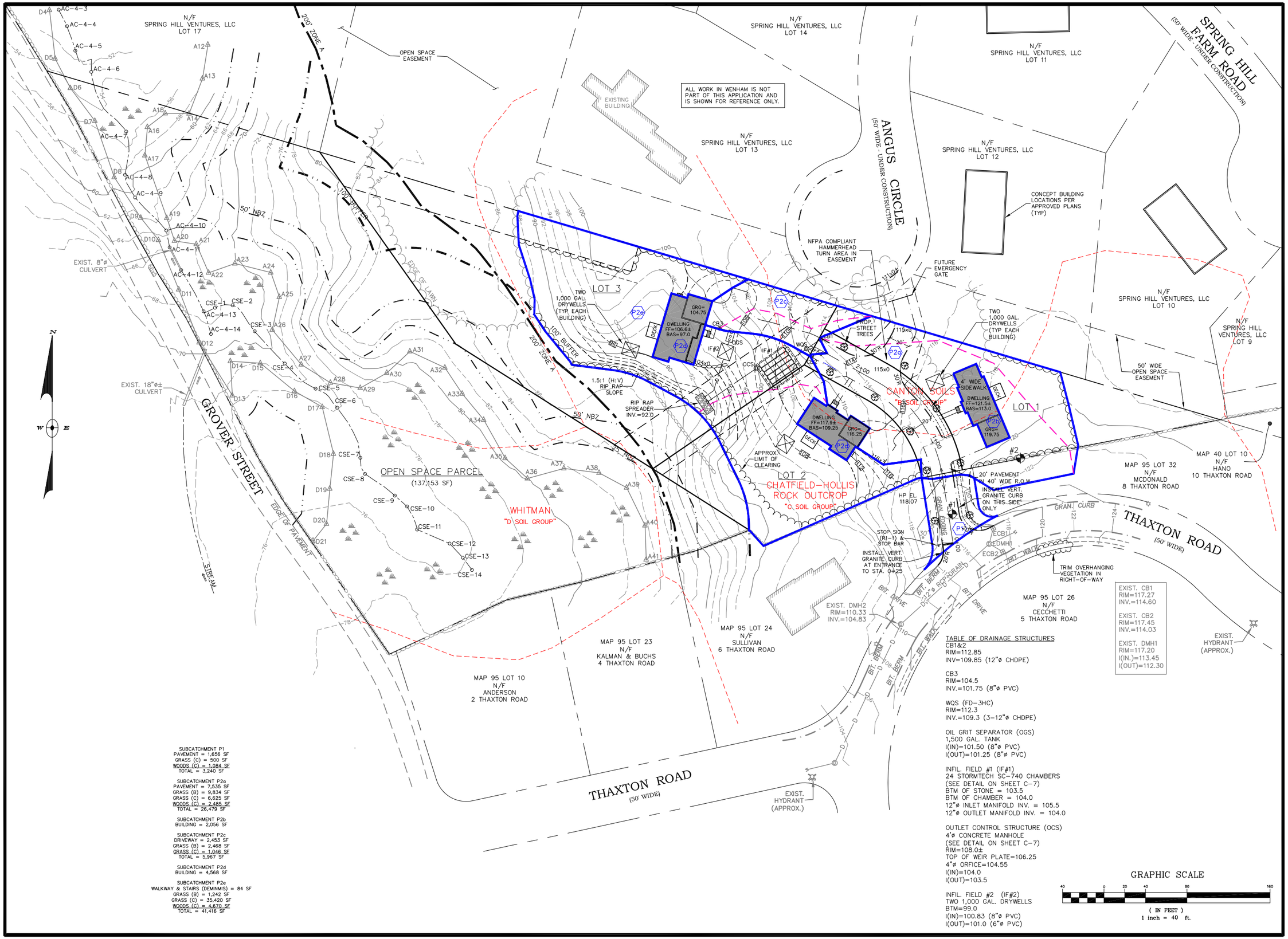

SUBCATCHMENT P1
PAVEMENT = 1,656 SF
GRASS (C) = 500 SF
WOODS (C) = 1,084 SF
TOTAL = 3,240 SF

SUBCATCHMENT P2a
PAVEMENT = 7,535 SF
GRASS (B) = 9,834 SF
GRASS (C) = 6,625 SF
WOODS (C) = 2,485 SF
TOTAL = 26,479 SF

SUBCATCHMENT P2b
BUILDING = 2,056 SF

SUBCATCHMENT P2c
DRIVEWAY = 2,453 SF
GRASS (B) = 2,468 SF
GRASS (C) = 1,046 SF
TOTAL = 5,967 SF

SUBCATCHMENT P2d
BUILDING = 4,568 SF

SUBCATCHMENT P2e
WALKWAY & STAIRS (DEMINMIS) = 84 SF
GRASS (B) = 1,242 SF
GRASS (C) = 35,420 SF
WOODS (C) = 4,670 SF
TOTAL = 41,416 SF

TABLE OF DRAINAGE STRUCTURES

CB1&2
RIM=112.85
INV=109.85 (12"ø CHDPE)

CB3
RIM=104.5
INV.=101.75 (8"ø PVC)

WQS (FD-3HC)
RIM=112.3
INV.=109.3 (3-12"ø CHDPE)

OIL GRIT SEPARATOR (OGS)
1,500 GAL. TANK
I(IN)=101.50 (8"ø PVC)
I(OUT)=101.25 (8"ø PVC)

INFIL. FIELD #1 (IF#1)
24 STORMTECH SC-740 CHAMBERS
(SEE DETAIL ON SHEET C-7)
BTM OF STONE = 103.5
BTM OF CHAMBER = 104.0
12"ø INLET MANIFOLD INV. = 105.5
12"ø OUTLET MANIFOLD INV. = 104.0

OUTLET CONTROL STRUCTURE (OCS)
4'ø CONCRETE MANHOLE
(SEE DETAIL ON SHEET C-7)
RIM=108.0±
TOP OF WEIR PLATE=106.25
4"ø ORFICE=104.55
I(IN)=104.0
I(OUT)=103.5

INFIL. FIELD #2 (IF#2)
TWO 1,000 GAL. DRYWELLS
BTM=99.0
I(IN)=100.83 (8"ø PVC)
I(OUT)=101.0 (6"ø PVC)

GRAPHIC SCALE
40 0 20 40 80 160
(IN FEET)
1 inch = 40 ft.

No.	Date	Description

Revisions

Griffin Engineering Group, LLC
495 Cabot Street, 2nd Floor
Beverly, MA 01915
Tel: 978-927-5111
Fax: 978-927-5103

HICKORY STREET REALTY TRUST
THAXTON ROAD
BEVERLY, MA

THAXTON HEIGHTS RD.

PROPOSED SUBCATCHMENT PLAN

Scale: 1"=40'
Job No.: 1729
File Name: p/p/mc/th
Date: 2/20/19

D-2

ATTACHMENT E

LONG TERM POLLUTION PREVENTION PLAN

Long Term Pollution Prevention Plan

Standard #4 of the MassDEP Stormwater Management Handbook requires that a Long Term Pollution Prevention Plan (LTPPP) be prepared and incorporated into the long term operation and maintenance plan of the projects stormwater management system. The purpose of the LTPPP is to identify potential sources of pollution that may affect the quality of stormwater discharges and to describe suggested practices to reduce pollutants in stormwater discharges.

Good housekeeping practices - The property owners are to keep the site in a neat and orderly condition so that pollutants are not conveyed to the storm drainage system. Materials swept, blown or washed into the storm drains can decrease the system's effectiveness and could eventually be conveyed into the adjacent wetland resource area. Some examples of good housekeeping practices are pavement sweeping, litter control, contained outdoor waste and proper cigarette disposal, and protected material storage areas. The property owners should assign responsibilities to personnel to keep the site in a neat and orderly condition.

Provisions for storing materials and waste products inside or under cover – There are no exterior (un-covered) storage areas associated with the project site. The trash and waste program include a weekly curbside trash pickup. A trash disposal company hired by the city will pick up waste materials and properly dispose at a state approved disposal facility.

The stormwater drainage system has catchbasins with hooded outlets and deep sumps designed to capture and retain trash, debris, oils, and sediments. Downstream of the catchbasins but before the stormwater outfall, a proprietary separator is installed to further intercept and trash, debris, oils, and sediments from the roadway that might have entered the stormwater drainage system.

Requirements for routine inspections and maintenance of stormwater BMP's - Consistent with Standard 9 of the Massachusetts Stormwater Management Regulations, an Operation and Maintenance Plan has been provided in the Stormwater Management Report. The plan details routine inspection and maintenance of the stormwater BMP's along with associated record keeping forms.

Spill prevention and response plans – Sources of potential spill hazards include vehicle fluids and fuels, pesticides, paints, solvents, and liquid cleaning products. The majority of the spill hazards would likely occur within the building and would not enter the stormwater drainage system. However, there are spill hazards from vehicle fluids and fuels located outside of the buildings. These exterior spill hazards have the potential to enter the stormwater drainage system and are to be addressed as follows:

1) Spill hazards of pesticides, paints, and solvents shall be remediated using the Manufacturers' recommended spill cleanup protocol.
2) Vehicle fluid and fuel spills shall be remediated according to local and state regulations governing fuel spills.
3) The property owners shall have the following equipment and materials on hand to address a spill clean-up: brooms, dust-pans, mops, rags, gloves, trash bags, trash containers, and absorptive materials such as sand, sawdust, or kitty litter.
4) Spills of toxic or hazardous materials shall be reported to the Massachusetts Department of Environmental Protection at 1-888-304-1133.

Provisions for maintenance of lawns, garden, and other landscaped areas - It should be a general goal of the subject property owners to achieve a high quality of well-groomed and stable landscape that evolves throughout the changing seasons and overall condition of the property. All landscaped areas are to be maintained with dense vegetative growth or a layer of mulch so as to minimize sediment transport associated with erosion. Litter and waste is to be removed weekly from the landscaped areas and adjoining parking lots and disposed of properly.

Requirements for storage and use of fertilizer, herbicides, and pesticides - Fertilizers, herbicides, and pesticides are not to be stored on site or within the buildings. Should use of same become necessary, application should be performed by a state licensed contractor in accordance with the manufacturer's label instruction and when environmental conditions are conducive to product application. Chemical controls should be used as a last resort to organic and biological control methods.

Pet waste management provisions - All pet waste is to be scooped up, sealed in a plastic bag, and disposed of properly in the garbage. Never deposit pet waste in the stormwater management system for it contains high level of fecal coliform bacteria.

Provisions for operation and management of septic systems – There are no septic systems associated with the project site. The sanitary sewer is proposed to be connected to the City sewer main in Thaxton Road.

Snow disposal and deicing chemicals – The roadway is designed with 20 feet of pavement and minimum 6-foot wide shoulder throughout. This should provide ample width to maintain reasonable travel lanes with snow cast along the edge of the roadway and reserve strip. Snow removal has generally not been necessary in newly-constructed residential subdivisions in Beverly in recent years, with the exception of limited clearing of snow banks at intersections to provide a path for adjoining sidewalks and to increase visibility. In these instances snow is usually moved less than 100 feet to a more convenient location. No snow is to be moved to within 100 feet of a wetland resource

area.

A Homeowners Association will be formed to share the cost associated with snow removal from the roadway. Individual property owners will be responsible for the clearing of their individual driveways and building entrances. The use of de-icing agent such as salt or potassium chloride may be required to maintain a safe walking surface. The de-icing agent for the walkways and building entrances may be kept on site within the building (i.e. garage). De-icing agents are not to be stored outside.

ATTACHMENT F

OPERATION &
MAINTENANCE
PLAN

Operation & Maintenance Plan

System Owner: Hickory Street Realty Trust (or Successors)

Party Responsible for O&M: Following construction, the roadway drainage system will be maintained by a Homeowners Association. This includes the catchbasins, drainage pipes, First Defense stormwater treatment devices, and infiltration field. The drywells on the individual residential building lots and the stormwater features (catchbasin, oil grit separator, and infiltration field) on Lot 3 will be maintained by the individual property owners.

Note: The inspector should note that drainage pipes, manholes and catchbasins often are considered "confined spaces" subject to strict OSHA standards regarding safe entry. Confined spaces present inherent hazards to workers. Only appropriately trained staff with appropriate safety equipment and monitors may enter confined spaces, and then only with a specific entry permit. Also, this work may pose hazards to workers, such as soft ground, flowing or standing water, snakes and rodents. Again, only appropriately trained staff with the necessary safety equipment should undertake such work.

The drainage system is to be operated and maintained in accordance with the following:

Part I: Construction Phase Controls

Roadway Construction Phasing: Construction shall proceed in the following sequence:

1. Install Erosion Controls downhill of work areas and site Construction Entrance. Inspection and maintenance of these Erosion Controls and Construction Entrance is required throughout the project as detailed below.

2. Clear trees from roadway area.

3. Install construction entrance (rip rap) at the end of the roadway stub for construction vehicles entering and exiting

4. Grub stumps and strip topsoil.

5. Install all underground utilities (water, sewer, electrical, telephone, and cable) and bring roadway alignment to rough subgrade. Start construction from the end of the roadway and work towards Thaxton Road.

6. Install roadway drainage system including infiltration field #1 and outfall. Protect all drainage system inlets when installed. Grade the embankment

and protect the side slope with erosion control blankets. Install haybales and silt fence uphill of the rip rap spreader to prevent sediment transport into the spreader. Haybales are to be maintained until the uphill area is stabilized.

7. Install road base, fine grade and install binder course of bituminous pavement. Install drainage grates and protect with silt sacks.

8. Install curbing, sidewalk, tree belts, and grass strip.

9. Adjust manholes frame and covers/grates and the install final paving.

Throughout construction, siltation controls are to be placed at drain inlets to prevent silt from entering the drainage system. These controls are to be inspected daily and maintained throughout the duration of the construction phase, and removed only when needed to pave the surfaces. The siltation controls shall be maintained and sediment removed as needed throughout construction.

Home Construction Phasing: Construction shall proceed in the following sequence.

1. Install Erosion Controls downhill of work areas. Inspection and maintenance of these Erosion Controls is required throughout the project as detailed below.

2. Clear & Grub lot.

3. Install construction entrance (rip rap apron) along street line for construction vehicles entering and exiting.

4. Excavate foundation hole. Install foundation and first floor deck.

5. Backfill around the foundation, install building utilities including lot specific drainage systems, and rough grade site. Construct structure.

6. Install driveway and finish landscaping

Part II: Post-Development Operation & Maintenance

1). Inspections. Inspection of the drainage system components are to be performed by the System Owner during the first year of operation on a quarterly basis. The inspection frequency can be reduced after the first year to annual inspections provided that the quarterly inspections do not indicate the need for more frequent inspections. If more frequent inspections become appropriate at any time, they should be implemented. Inspections should be documented by taking necessary notes, measurements, photographs, and retaining service receipts. The following inspections are required of the system owner.

Roadway - Remove debris from the roadway as part of normal site clean-up. Weekly patrolling for litter is recommended. Sand from ice control should be removed via a street sweeper (if necessary) at the conclusion of the winter season. Significant oil leaks should be swept up and disposed of using oil-absorbent material as they are discovered. Any oil spills or leaks that reach the catchbasins must be reported to the MassDEP oil spill hotline.

Piping System - During each inspection, all visible piping is to be inspected for structural integrity, settlement and sedimentation. Standing water in the manhole above the bottom of the pipe indicates a possible blockage or settlement which warrants further video inspection. Observed sediment in the piping indicates the need for cleaning.

Catchbasins - Remove the grate and visually inspect for corrosion and structural damage. Inspect pipe inlets and bottoms for signs of exfiltration or inflow. The grate and hoods on the catchbasins should be inspected on a quarterly basis during the first and year and annual thereafter. Cleaning of the catchbasins should be done on a yearly basis and by a vacuum truck or clamshell. The contractor is to take care to avoid damaging the catchbasin hood. While cleaning, if a layer of oil is observed floating on the water surface, place an oil-absorbent pillow on the surface, allow to soak and remove. Repeat this process until the oil layer is removed. Alternatively, have the oil layer pumped out by a licensed disposal contractor and appropriately disposed of. The oil absorbent pillows must be drummed for disposal by a licensed disposal contractor.

First Defense Stormwater Treatment Device - A copy of the manufacturer's Operation & Maintenance Manual is provided at the end of this section which contains the required operation and maintenance procedures for the treatment device. The device should be inspected for corrosion and structural damage on a quarterly basis during the first year and annually thereafter. The device also should be cleaned on a yearly basis and in accordance with the manufacturer's procedural recommendations. An example inspection report for the Treatment Device is included in the manufacture's Operation & Maintenance Manual.

Oil Grit Separator - Remove the covers from the oil grit separator and visually inspect for corrosion and structural damage. Using a wooden pole, probe the structure to determine the depth of sediment in the three chambers. Accumulation greater than 16" indicates clean-out is necessary. Cleaning should be by a vacuum truck. If an oil layer is floating on the water surface, place an addition oil-absorbant pillow on surface, allow to soak and remove and replace. Repeat this process until the oil layer is removed. Alternatively, have the oil layer pumped out by a licensed disposal contractor and appropriately disposed of. The oil absorbent pillows must be drummed for disposal by a

licensed disposal contractor.

Infiltration Field #1 – The infiltration field has been provided with multiple inspection ports. Initially inspect the stormwater infiltration field after each major storm events (greater than 1-inch) to ensure proper function and stabilization. Record the water level over several hours to check field dewatering and infiltration performance. After the first year, inspect the infiltration field on a semi-annual basis. Inspect for apparent signs of silt buildup or clogging.

Infiltration Fields #2 and Drywell Structures. Initially, inspect the infiltration field and drywell recharge structures after major storms to ensure proper function and stabilization. Record water levels over several days to check for the infiltration performance. After the first year, inspect the recharge structures annually for silt buildup or clogging.

TABLE 1: Construction Phase Inspection and Maintenance Procedures

Control	Inspection Frequency (1)	Maintenance Procedure
Construction Entrance	Weekly	a
Silt Fence	Weekly	a
Dust Control	Daily	b
Permanent Stabilization	Weekly	c

1. Inspection frequencies are a minimum. Site conditions may warrant more frequent review. All control shall be inspected after each storm event which exceeds 0.5 inches in 24-hours.

2. Maintenance Procedures shall be reviewed and revised as necessary to protect the environment.

   a. Remove accumulated debris and replace as necessary.
   b. Water or calcium chloride shall be utilized to prevent the generation of dust.
   c. Disturbed areas shall either be paved or stabilized by permanent seeding.

Inspection forms are to be completed weekly and retained with project files.

INSPECTION AND MAINTENANCE REPORT FORM

TO BE COMPLETED EVERY 7 DAYS AND WITHIN 24 HOURS OF
A RAINFALL EVENT OF 0.5 INCHES OR MORE

INSPECTOR:_____
DATE:_____
INSPECTOR'S QUALIFICATIONS:
_____
_____
DAYS SINCE LAST RAINFALL:_____

AMOUNT OF LAST RAINFALL:_____ INCHES

STABILIZATION MEASURES

Project Area	Date Since Last Disturbed	Date of Next Disturbance	Stabilized? (Yes/No)	Stabilized With	Condition
North East South West					

STABILIZATION REQUIRED:
_____
_____

TO BE PERFORMED BY:_____ ON OR BEFORE_

INSPECTION AND MAINTENANCE REPORT FORM

STABILIZED CONSTRUCTION ENTRANCE

Does Sediment Get Tracked onto the Road?	Is the Gravel Clean or is it Filled with Sediment?	Does All Traffic Use the Stabilized Exit to Leave the Site?

MAINTENANCE REQUIRED FOR ENTRANCE:

_____
_____
_____
_____
_____

TO BE PERFORMED BY:_____ ON OR BEFORE__

INSPECTION AND MAINTENANCE REPORT FORM

SILT FENCE or HAYBALES

Location	Depth of Sediment Build-Up	Sediment Need Removal?	Need Replacement?
Eastern Side			
Southern Side			
Western Side			
Northern Side			

MAINTENANCE REQUIRED FOR SWALE:

_____

_____

TO BE PERFORMED BY:_____ ON OR BEFORE_

INSPECTION AND MAINTENANCE REPORT FORM

INFILTRATION FIELDS

Location	Depth of Sediment Build-Up	Sediment Need Removal?	Need Replacement?

MAINTENANCE REQUIRED FOR FIELDS:

_____
_____
_____
_____

TO BE PERFORMED BY:_____ON OR BEFORE_____

INSPECTION AND MAINTENANCE REPORT FORM

DEEP SUMP CATCHBASINS / STORMWATER TREATMENT DEVICES

Location	Depth of Sediment Build-Up	Sediment Need Removal?	Need Replacement?

MAINTENANCE REQUIRED:

_____
_____
_____
_____

TO BE PERFORMED BY:_____ ON OR BEFORE_____

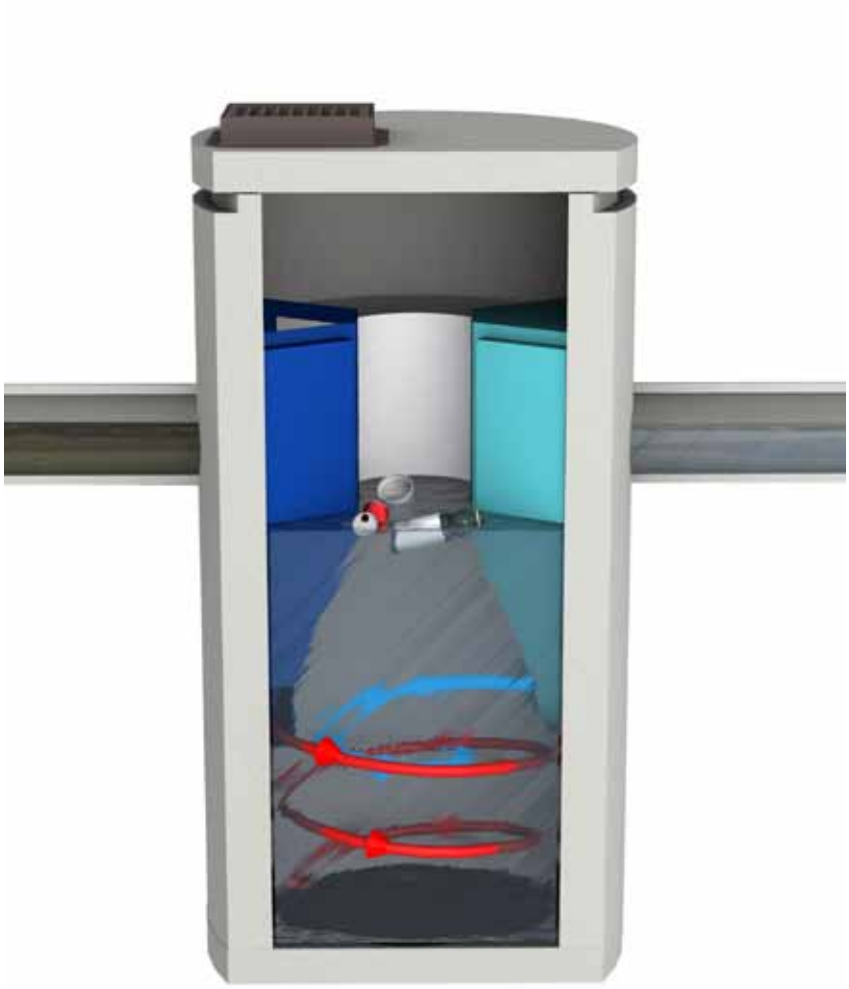

Operation and Maintenance Manual

First® Defense

Vortex Separator for Stormwater Treatment

Stormwater Solutions

Turning Water Around ...®

Table of Contents

3 First Defense® by Hydro International
- Benefits of the First Defense®
- Applications
- First Defense® Components

4 Operation
- Introduction
- Pollutant Capture and Retention
- Wet Sump
- Blockage Protection

4 Maintenance
- Overview
- Determining Your Maintenance Schedule

5 Maintenance Procedures
- Inspection
- Floatables and Sediment Cleanout

8 First Defense® Installation Log

9 First Defense® Inspection and Maintenance Log

COPYRIGHT STATEMENT: The contents of this manual, including the graphics contained herein, are intended for the use of the recipient to whom the document and all associated information are directed. Hydro International plc owns the copyright of this document, which is supplied in confidence. It must not be used for any purpose other than that for which it is supplied and must not be reproduced, in whole or in part stored in a retrieval system or transmitted in any form or by any means without prior permission in writing from Hydro International plc. First Defense® is a trademarked hydrodynamic vortex separation device of Hydro International plc. A patent covering the First Defense® has been granted.

DISCLAIMER: Information and data contained in this manual is exclusively for the purpose of assisting in the operation and maintenance of Hydro International plc's First Defense®. No warranty is given nor can liability be accepted for use of this information for any other purpose. Hydro International plc has a policy of continuous product development and reserves the right to amend specifications without notice.

Hydro International (Stormwater), 94 Hutchins Drive, Portland ME 04102
Tel: (207) 756-6200 Fax: (207) 756-6212 Web: www.hydro-int.com

First Defense® by Hydro International

Capturing more than 25 years of separation design experience, the First Defense® is Hydro International's latest addition to its family of hydrodynamic vortex separators intended for stormwater applications. It has been developed with ease of installation and maintenance at the forefront without sacrificing performance or design flexibility.

All internal components are housed in either a 4-ft or 6-ft diameter precast manhole that is designed to withstand traffic loads. Each model can be used as a catch basin inlet or standard manhole with solid cover so that runoff can enter from an overhead grate, inlet pipe or both without diminishing performance.

The First Defense® has internal components that are designed to generate rotational flow within the device without requiring a tangential inlet. Flow within the precast chamber is controlled to prevent turbulence and its unique reverse-flow outlet intake ensures a longer retention time by preventing short-circuiting. An internal bypass prevents high flow re-suspension and washout and eliminates the need for additional bypass structures. The internals can easily be adjusted to change the angle between the inlet and outlet for storm drain directional changes and dual inlets can be accomodated in most cases. This simplifies grading and site design so that flow can be conveyed from isolated locations within the same site without increasing the number of structures.

For removal of fine sediment and associated pollutants, oil spills, trash and debris, the first choice in stormwater treatment systems is the First Defense®.

First Defense® Components

1. **Built-In Bypass**
2. **Inlet Pipe**
3. **Inlet Chute**
4. **Floatables Draw-off Port (not pictured)**
5. **Outlet Pipe**
6. **Floatables Storage**
7. **Outlet Chute**
8. **Sediment Storage**

Benefits of the First Defense®

- Compact and flexible design
  - Can be used as a catch basin inlet and directional change manhole
  - Optional one or two inlets
  - Does not require a bypass structure
- Hydrodynamic Vortex Separation
  - Extended and structured flow path
  - Minimal headloss
  - Reduces turbulence and re-suspension
  - Reverse-flow outlet intake prevents short-circuiting
  - Improved efficiency for all flows
- Delivered Pre-assembled for easy and fast installation
- Simple to inspect and maintain
- Independently verified

Applications

- New developments and retrofits
- Utility yards
- Streets and roadways
- Parking lots
- Pre-treatment for filters, infiltration and storage
- Industrial and commercial facilities
- Wetlands protection

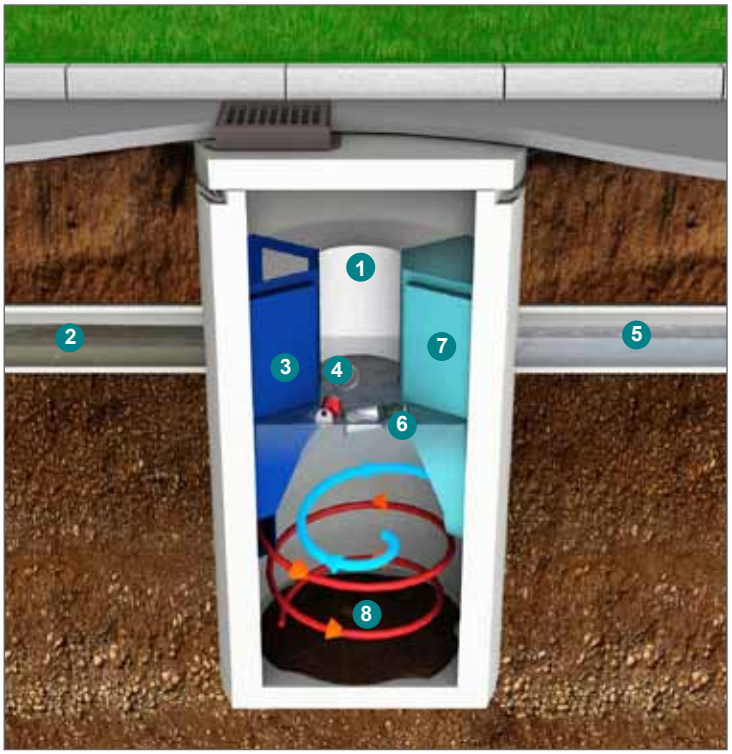

Operation

Introduction

The First Defense® operates on simple fluid hydraulics. It is self-activating, has no moving parts, no external power requirement and is fabricated with durable non-corrosive components. No manual procedures are required to operate the unit and maintenance is limited to monitoring accumulations of stored pollutants and periodic clean-outs. The First Defense® has been designed to allow for easy and safe access for inspection, monitoring and clean-out procedures. Neither entry into the unit nor removal of the internal components is necessary for maintenance, thus safety concerns related to confined-space-entry are avoided.

Pollutant Capture and Retention

The internal components of the First Defense® have been designed to optimize pollutant capture. Sediment is captured and retained in the base of the unit, while oil and floatables are stored on the water surface in the inner volume. The pollutant storage volumes are isolated from the built-in bypass chamber to prevent washout during high-flow internally-bypassed storm events. Accessories such as oil absorbant pads are available for enhanced oil removal and storage. Due to the separation of the oil and floatable storage volume from the outlet, the potential for washout of stored pollutants between clean-outs is minimized.

Wet Sump

The sump of the First Defense® retains a standing water level between storm events. The water in the sump prevents stored sediment from solidifying in the base of the unit. The clean-out procedure becomes more difficult and labor intensive if the system allows fine sediment to dry-out and consolidate. Dried sediment must be manually removed by maintenance crews. This is a labor intensive operation in a hazardous environment.

Maintenance

Overview

The First Defense® protects the environment by removing a wide range of pollutants from stormwater runoff. Periodic removal of these captured pollutants is essential to the continuous, long-term functioning of the First Defense®. The First Defense® will capture and retain sediment and oil until the sediment and oil storage volumes are full to capacity. When sediment and oil storage capacities are reached, the First Defense® will no longer be able to store removed sediment and oil. Maximum pollutant storage capacities are provided in Table 1.

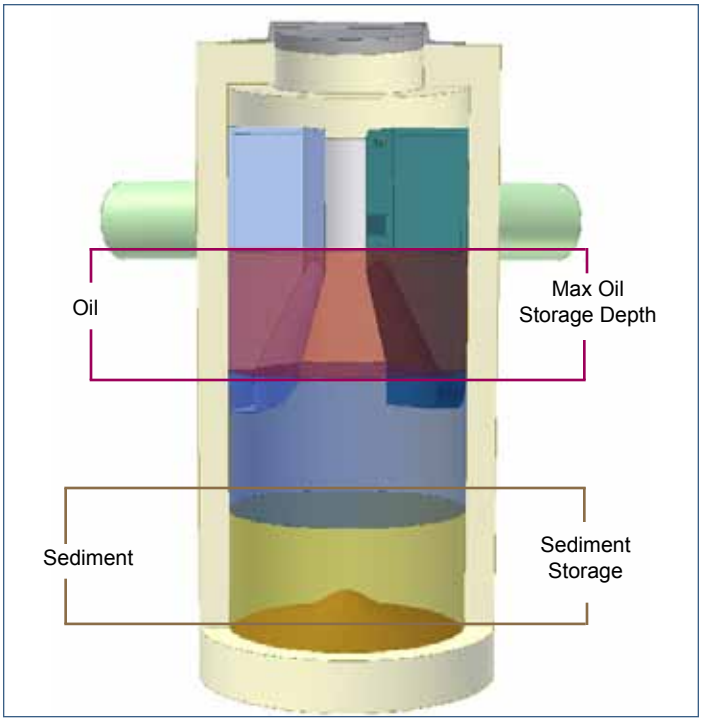

Fig.1 Pollutant storage volumes in the First Defense®.

The First Defense® allows for easy and safe inspection, monitoring and clean-out procedures. A commercially or municipally owned sump-vac is used to remove captured sediment and floatables. Access ports are located in the top of the manhole.

Maintenance events may include Inspection, Oil & Floatables Removal, and Sediment Removal. Maintenance events do not require entry into the First Defense®, nor do they require the internal components of the First Defense® to be removed. In the case of inspection and floatables removal, a vactor truck is not required. However, a vactor truck is required if the maintenance event is to include oil removal and/or sediment removal.

Determining Your Maintenance Schedule

The frequency of cleanout is determined in the field after installation. During the first year of operation, the unit should be inspected every six months to determine the rate of sediment and floatables accumulation. A simple probe such as a Sludge Judge® can be used to determine the level of accumulated solids stored in the sump. This information can be recorded in the maintenance log (see page 9) to establish a routine maintenance schedule.

The vactor procedure, including both sediment and oil/flotables removal, for a 6-ft First Defense® typically takes less than 30 minutes and removes a combined water/oil volume of about 800 gallons.

Inspection

Inspection is a simple process that does not involve entry into the First Defense®. Maintenance crews should be familiar with the First Defense® and its components prior to inspection.

Scheduling

- It is important to inspect your First Defense® every six months during the first year of operation to determine your site-specific rate of pollutant accumulation.
- Typically, inspection may be conducted during any season of the year.

Recommended Equipment

- Safety Equipment and Personal Protective Equipment (traffic cones, work gloves, etc.)
- Crow bar or other tool to remove grate or lid
- Pole with skimmer or net
- Sediment probe (such as a Sludge Judge®)
- Trash bag for removed floatables
- First Defense® Maintenance Log

Table 1. First Defense® Pollutant Storage Capacities and Maximum Cleanout Depths

Unit Diameter	Total Oil Storage	Oil Clean-out Depth	Total Sediment Storage	Sediment Clean-out Depth	Max. Liquid Volume Removed
(ft)	(gal)	(in)	(gal)	(in)	(gal)
4	180	<23.5	202	26	202-342
6	420	<23.5	626	36	626-1,046

NOTE

The total volume removed will depend on the oil accumulation level. Oil accumulation is typically much less than sediment, however removal of oil and sediment during the same service is recommended.

Inspection Procedures

1. Set up any necessary safety equipment around the access port or grate of the First Defense® as stipulated by local ordinances. Safety equipment should notify passing pedestrian and road traffic that work is being done.

2. Remove the grate or lid to the manhole.

3. Without entering the vessel, look down into the chamber to inspect the inside. Make note of any irregularities. Fig.2 shows the standing water level that should be observed.

4. Without entering the vessel, use the pole with the skimmer net to remove floatables and loose debris from the outer annulus of the chamber.

5. Using a sediment probe such as a Sludge Judge®, measure the depth of sediment that has collected in the sump of the vessel.

6. On the Maintenance Log (see page 9), record the date, unit location, estimated volume of floatables and gross debris removed, and the depth of sediment measured. Also note any apparent irregularities such as damaged components or blockages.

7. Securely replace the grate or lid.

8. Take down safety equipment.

9. Notify Hydro International of any irregularities noted during inspection.

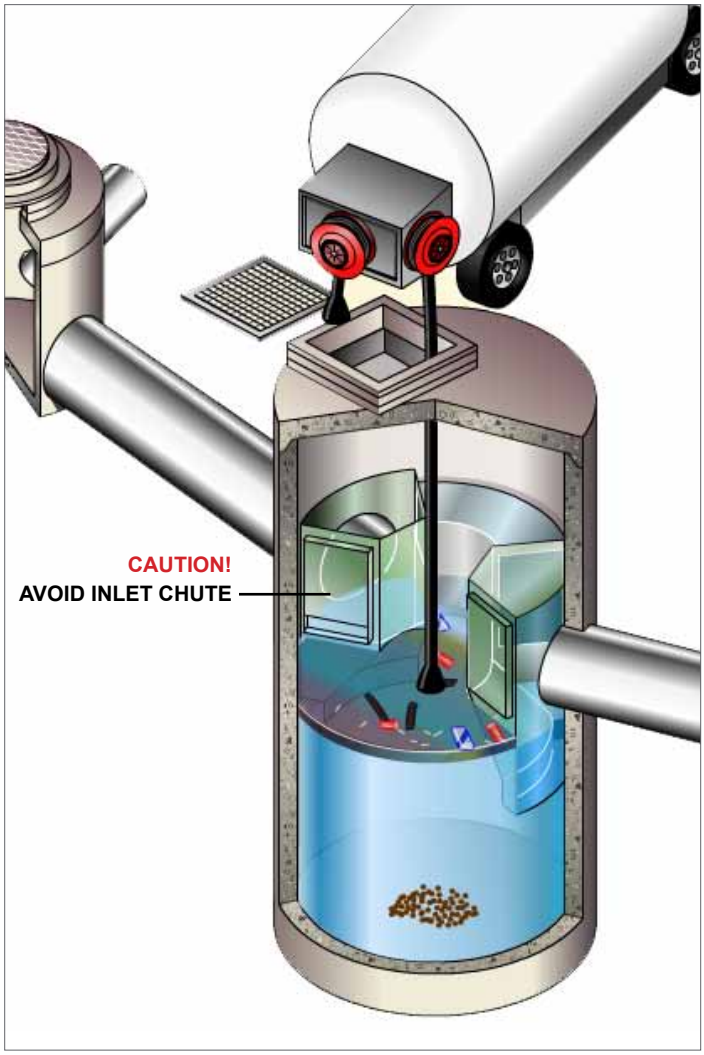

Fig.2 Floatables are removed with a vactor hose.

Floatables and Sediment Cleanout

Floatables cleanout is typically done in conjunction with sediment removal. A commercially or municipally owned sump-vac is used to remove captured sediment and floatables (Fig.2).

Floatables and loose debris can also be netted with a skimmer and pole. The access port located at the top of the manhole provides unobstructed access for a vactor hose and skimmer pole to be lowered to the base of the sump.

Scheduling

- Floatables and sump cleanout are typically conducted once a year during any season.

- Floatables and sump cleanout should occur as soon as possible following a spill in the contributing drainage area.

Recommended Equipment

- Safety Equipment (traffic cones, etc)

- Crow bar or other tool to remove grate or lid

- Pole with skimmer or net (if only floatables are being removed)

- Sediment probe (such as a Sludge Judge®)

- Vactor truck (flexible hose recommended)

- First Defense® Maintenance Log

Floatables and sediment Clean Out Procedures

1. Set up any necessary safety equipment around the access port or grate of the First Defense® as stipulated by local ordinances. Safety equipment should notify passing pedestrian and road traffic that work is being done.

2. Remove the grate or lid to the manhole.

3. Without entering the vessel, look down into the chamber to inspect the inside. Make note of any irregularities.

4. Remove oil and floatables stored on the surface of the water with the vactor hose (Fig.2) or with the skimmer or net (not pictured).

5. Using a sediment probe such as a Sludge Judge®, measure the depth of sediment that has collected in the sump of the vessel and record it in the Maintenance Log (page 9).

6. Once all floatables have been removed, drop the vactor hose to the base of the sump. Vactor out the sediment and gross debris off the sump floor (Fig.3).

7. Retract the vactor hose from the vessel.

8. On the Maintenance Log provided by Hydro International, record the date, unit location, estimated volume of floatables and gross debris removed, and the depth of sediment measured. Also note any apparent irregularities such as damaged components, blockages, or irregularly high or low water levels.

9. Securely replace the grate or lid.

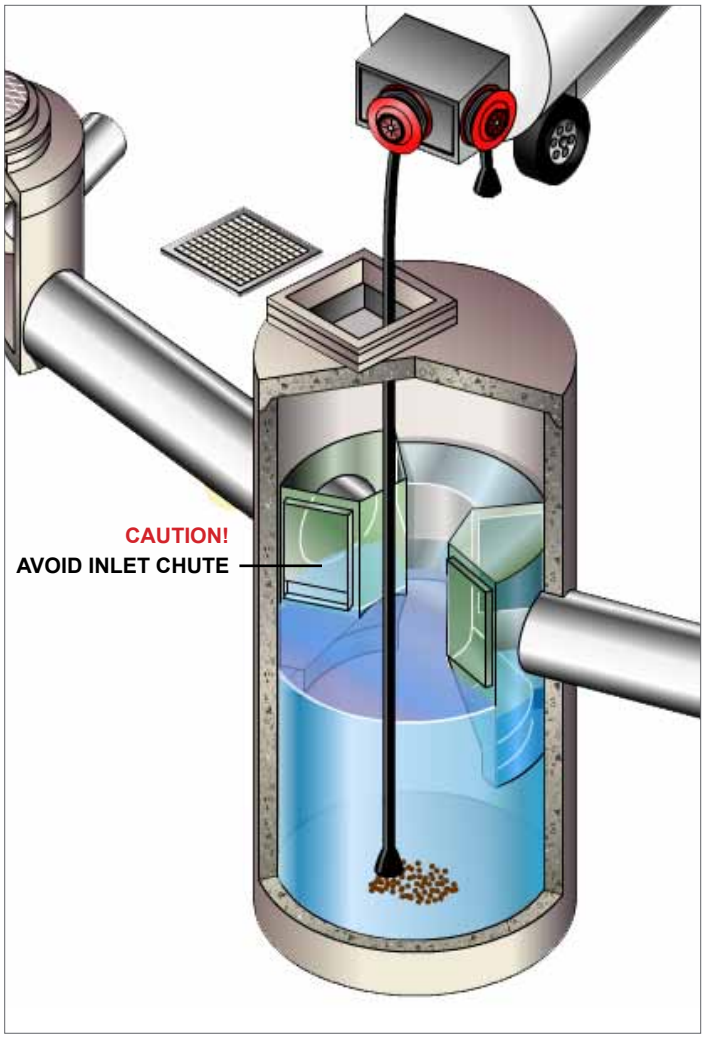

Fig.3 Sediment is removed with a vactor hose

Maintenance at a Glance

Activity	Frequency
Inspection	- Regularly during first year of installation - Every 6 months after the first year of installation
Oil and Floatables Removal	- Once per year, with sediment removal - Following a spill in the drainage area
Sediment Removal	- Once per year or as needed - Following a spill in the drainage area
NOTE: For most cleanouts it is not necessary to remove the entire volume of liquid in the vessel. Only removing the first few inches of oils/floatables and the sediment storage volume is required.	

First Defense® Installation Log

HYDRO INTERNATIONAL REFERENCE NUMBER:	
SITE NAME:	
SITE LOCATION:	
OWNER:	CONTRACTOR:
CONTACT NAME:	CONTACT NAME:
COMPANY NAME:	COMPANY NAME:
ADDRESS:	ADDRESS:
TELEPHONE:	TELEPHONE:
FAX:	FAX:

INSTALLATION DATE: / /

MODEL SIZE (CIRCLE ONE): **4-FT** **6-FT**

INLET (CIRCLE ALL THAT APPLY): **GRATE INLET (CATCH BASIN)** **INLET PIPE (FLOW THROUGH)**

Hydro International (Stormwater), 94 Hutchins Drive, Portland ME 04102
Tel: (207) 756-6200 Fax: (207) 756-6212 Web: www.hydro-int.com

First Defense® Inspection and Maintenance Log

Date	Initials	Depth of Floatables and Oils	Sediment Depth Measured	Volume of Sediment Removed	Site Activity and Comments

Hydro International (Stormwater), 94 Hutchins Drive, Portland ME 04102
Tel: (207) 756-6200 Fax: (207) 756-6212 Web: www.hydro-int.com

Hydro International (Stormwater), 94 Hutchins Drive, Portland ME 04102
Tel: (207) 756-6200 Fax: (207) 756-6212 Web: www.hydro-int.com

What is HX?

HX is Hydro Experience, it is the essence of Hydro. It's interwoven into every strand of Hydro's story, from our products to our people, our engineering pedigree to our approach to business and problem-solving.

HX is a stamp of quality and a mark of our commitment to optimum process performance. A Hydro solution is tried, tested and proven.

There is no equivalent to Hydro HX.

Stormwater Solutions

94 Hutchins Drive
Portland, ME 04102

Tel: (207) 756-6200
Fax: (207) 756-6212
stormwaterinquiry@hydro-int.com

www.hydro-int.com

Turning Water Around...®

FD_O+M_B1209

ATTACHMENT G

ILLICIT DISCHARGE
STATEMENT

ILLICIT DISCHARGE COMPLIANCE STATEMENT

I verify that no illicit discharges exist from the Thaxton Heights Road residential subdivision. Through the implementation of Long Term Pollution Prevention Plan and Operation and Maintenance Plan, measures are set forth to prevent illicit discharges from entering the stormwater management drainage system.

Signature	**Print Name**	**Date**
Title	**Company**	
Signature	**Print Name**	**Date**
Title	**Company**	

Note: This certification must be signed before stormwater is conveyed to the proposed stormwater drainage system in accordance with Standard 10 of the Massachusetts Stormwater Management Standards.

ATTACHMENT H

FIRST DEFENSE
NJCAT TECHNOLOGY
VERIFICATION
REPORT

NJCAT TECHNOLOGY VERIFICATION

First Defense® HC Stormwater Treatment Device

Hydro International

February, 2016

(Revised Table A-2 January 2017)

TABLE OF CONTENTS

List of Figures ii

List of Tables iii

1. Description of Technology 1

2. Laboratory Testing 2
   - 2.1 Test Unit 2
   - 2.2 Test Setup 4
   - 2.3 Test Sediment 7
   - 2.4 Removal Efficiency Testing Procedure 8
   - 2.5 Scour Testing Procedure 9

3. Performance Claims 10

4. Supporting Documentation 11
   - 4.1 Test Sediment PSD Analysis - Removal Efficiency Testing 11
   - 4.2 Removal Efficiency Testing 13
   - 4.3 Test Sediment PSD Analysis - Scour Testing 29
   - 4.4 Scour Testing for Online Installation 31

5. Design Limitations 32

6. Maintenance Plans 36

7. Statements 37

8. References 43

Verification Appendix 44

List of Figures

Page

Figure 1 First Defense HC…….....1

Figure 2 4-ft FDHC 3

Figure 3 Schematic Drawing and Photo of Sump Access Port 4

Figure 4 Sump Access Port sits Flush with Interior Manhole Wall.....4

Figure 5 Laboratory Testing Arrangement.....5

Figure 6 Effluent Sampling Location Situated above the Filter Box 6

Figure 7 Influent Feed Port for TSS Removal Efficiency Testing.....6

Figure 8 False Bottom Positions used during FDHC Testing 7

Figure 9 Average Test Sediment PSD vs Protocol Specification 12

Figure 10 Scour Test Sediment PSD vs Protocol Specification.....30

Figure 11 a) FDHC Online Application; b) FDHC Offline Application 34

Figure 12 FDHC Design Accommodates Various Inlet Pipe Configurations.....35

List of Tables

Page

Table 1 Particle Size Distribution Results of Test Sediment Samples 12

Table 2 Summary of 4-ft FDHC 25% MTFR Test 14

Table 3 4-ft FDHC 25% MTFR Test Calibration Results 14

Table 4 4-ft FDHC 25% MTFR Background and Effluent Measurements 15

Table 5 4-ft FDHC 25% MTFR Trial QA/QC Results 16

Table 6 Summary of 4-ft FDHC 50% MTFR Test 17

Table 7 4-ft FDHC 50% MTFR Test Calibration Results 17

Table 8 4-ft FDHC 50% MTFR Background and Effluent Measurements 18

Table 9 4-ft FDHC 50% MTFR Trial QA/QC Results 19

Table 10 Summary of 4-ft FDHC 75% MTFR Test 20

Table 11 4-ft FDHC 75% MTFR Test Calibration Results 20

Table 12 4-ft FDHC 75% MTFR Background and Effluent Measurements 21

Table 13 4-ft FDHC 75% MTFR Trial QA/QC Results 22

Table 14 Summary of 4-ft FDHC 100% MTFR Test 23

Table 15 4-ft FDHC 100% MTFR Test Calibration Results 23

Table 16 4-ft FDHC 100% MTFR Background and Effluent Measurements 24

Table 17 4-ft FDHC 100% MTFR Trial QA/QC Results 25

Table 18 Summary of 4-ft FDHC 125% MTFR Test 26

Table 19 4-ft FDHC 125% MTFR Test Calibration Results 26

Table 20 4-ft FDHC 125% MTFR Background and Effluent Measurements 27

Table 21 4-ft FDHC 125% MTFR Trial QA/QC Results 28

Table 22 Annualized Weighted TSS Removal of the 4-ft FDHC..... 29

Table 23 Scour Test Sediment Particle Size Distribution Comparison 30

Table 24 Flow and Background Concentrations for 4-ft FDHC Scour Testing 31

Table 25 Effluent Concentration Results for 4-ft FDHC Scour Test at 216% MTFR ...32

Table 26 Pollutant Storage Capacities of the FDHC 36

Table A-1 MTFRs and Required Sediment Removal Intervals for FDHC Models..... 46

Table A-2 Standard Dimensions for FDHC Models..... 47

1. Description of Technology

The First Defense® HC (FDHC) is a vortex separator designed and supplied by Hydro International. The FDHC is installed as part of typical drainage network systems to capture particulate pollutants that have entered the system from surface runoff. The FDHC has patented flow-modifying internal components that create a swirling flow path within the treatment chamber, which serves to supplement gravitational settling forces with additional vortex forces for enhanced settling performance. The FDHC chamber is a precast concrete manhole. The internal components are rotationally molded high density polyethylene. The internal components include an internal bypass weir to divert peak flows over the treatment chamber to prevent captured particles from being resuspended and washed out (**Figure 1**).

1. Inlet pipe
2. Vortex treatment chamber
3. Sediment storage sump
4. Internal bypass chamber
5. Internal bypass weir
6. Outlet pipe
7. Concrete Manhole

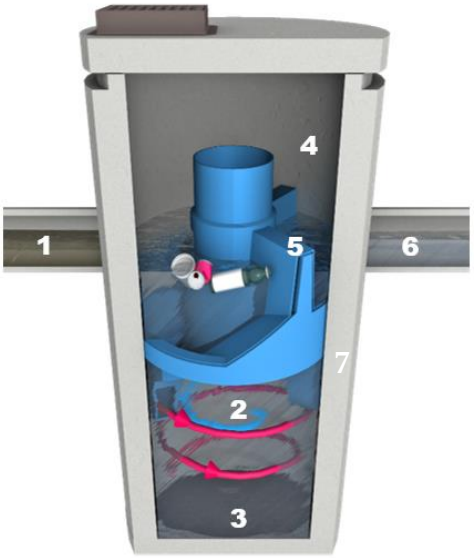

Figure 1 First Defense HC

Stormwater enters the FDHC through an inlet pipe and/or a surface grate. Hydrocarbons and other floatable solids rise to the surface where they are captured on the inlet side of the internal bypass weir. Stormwater is conveyed through a submerged inlet chute designed to initiate a spiraling flow path within the vortex treatment chamber. Suspended solids are captured in the sediment storage sump. Treated water exits the vortex treatment chamber via an outlet chute and exits the FDHC via an outlet pipe.

As many development sites in New Jersey require more than 50% TSS removal, the FDHC can be used as a pretreatment component in a treatment train when higher TSS removals are required and polishing BMPs such as infiltration or bio-infiltration are designed downstream.

2. Laboratory Testing

This testing was conducted to independently verify the FDHC such that it could be certified by the New Jersey Department of Environmental Protection (NJDEP) as a 50% Total Suspended Solids removal device.

The FDHC was tested to the "New Jersey Department of Environmental Protection Laboratory Protocol to Assess Total Suspended Solids Removal by a Hydrodynamic Sedimentation Manufactured Treatment Device" (NJDEP 2013). The testing was conducted in Portland, Maine at Hydro International's hydraulics laboratory under the supervision of FB Environmental Associates, Inc., who served as the independent observer. FB Environmental is a Portland, Maine based environmental engineering consultancy with prior experience serving as the independent observer for several hydrodynamic separators previously tested to this protocol.

The particle size distribution of the removal efficiency test sediment samples were analyzed by the independent analytical laboratory GeoTesting Express in Acton, Massachusetts. The particle size distribution samples for the scour testing test sediment were analyzed at the Hydro International laboratory under the supervision of the independent observer. All water quality samples for both the removal efficiency testing and the washout testing were collected, labeled and sealed under the direct supervision of the independent observer from FB Environmental and analyzed by Maine Environmental Laboratory in Yarmouth, Maine.

2.1 Test Unit

The test unit was a 4-ft FDHC comprised of full scale, commercially available 4-ft FDHC internal components installed in a 4-ft round plastic manhole chamber consistent in all key dimensions with the precast chambers used for commercial sales (**Figure 2**). Both the inlet and outlet pipe diameters of the test model were 24 inches, which is the standard pipe size for a 4-ft FDHC.

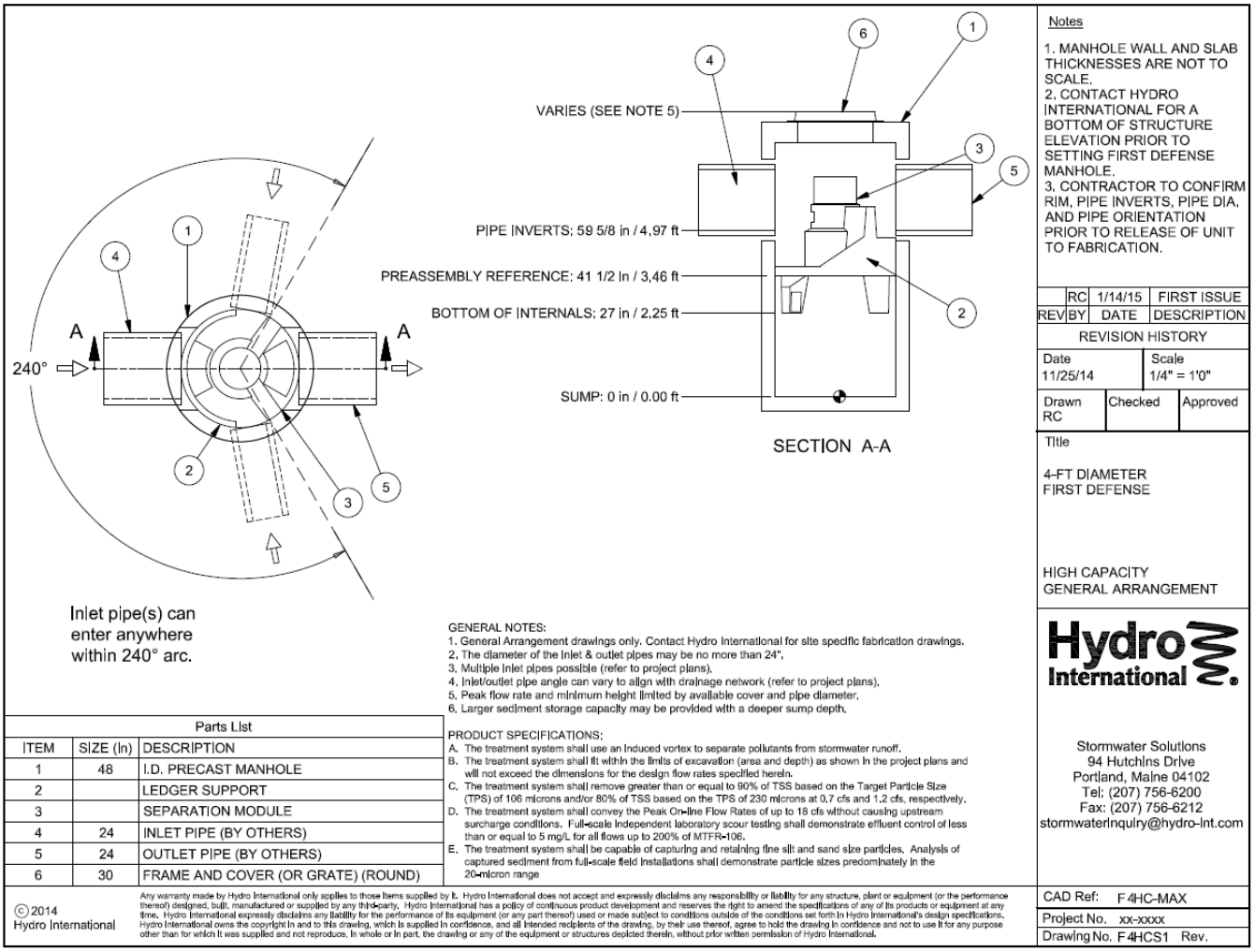

Figure 2 4-ft FDHC

The test vessel, unlike a commercial FDHC, had a rectangular access port located on the sump wall (**Figure 3a-b**). The access port eliminated the need for complete removal of the internal components and confined space entry into the FDHC to clean the unit between test events.

To ensure dimensional consistency with a commercial unit, the inside of the sump access port was fitted with an insert fabricated to be flush with the interior of the cylindrical manhole wall (**Figure 4**). Therefore the access port did not provide any additional sump storage capacity, did not alter the flow path within the vortex treatment chamber and ensured that the test vessel was dimensionally consistent to a standard commercial FDHC.

Prior to the beginning of the testing program, Hydro International laboratory technicians measured and recorded the key dimensions of the test vessel in the presence of the independent observer to ensure that the test unit assembly and test vessel dimensions were consistent with a commercial 4-ft FDHC.

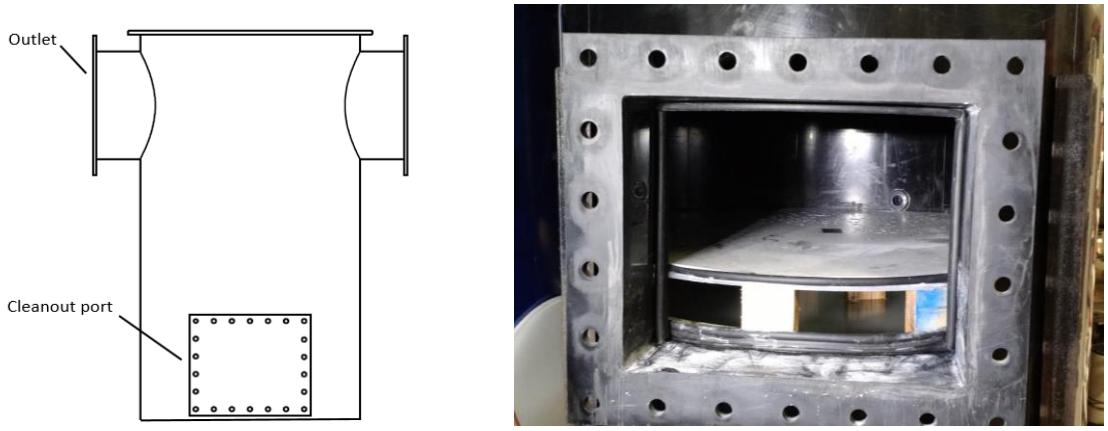

Figure 3 Schematic Drawing and Photo of Sump Access Port

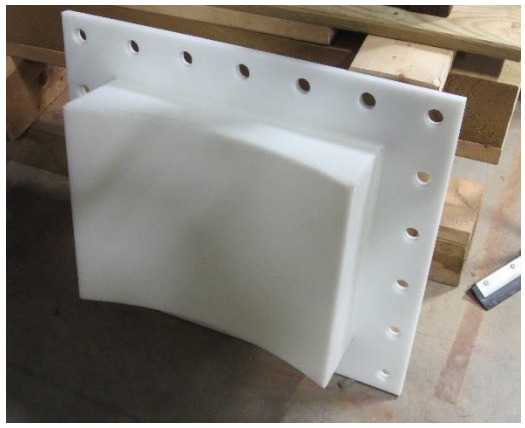

Figure 4 Sump Access Port sits Flush with Interior Manhole Wall

2.2 Test Setup

The laboratory setup consisted of a recirculating closed loop system with an 8-inch submersible Flygt pump that conveyed water from a 23,000 gallon reservoir through a PVC pipe network to the 4-ft FDHC (**Figure 5**). The flow rate of the pump was controlled by a GE Fuji Electric AF-300 P11 Adjustable Frequency Drive and measured by an EMCO Flow Systems 4411e Electromagnetic Flow Transmitter.

The water temperature within the reservoir was regulated by a Hayward 350FD pool heater, which was used to reduce the possibility of volatility in the test data that could potentially be caused by variability in water temperatures between test runs. The night before a test run, the heater was set to 80°F. In the morning, the heater was turned off at least one hour before testing began. The heater then remained off throughout the entire duration of each test run. The Hayward 350FD assembly includes a small recirculation pump that causes a gentle current in the reservoir, which could potentially cause high background concentration readings during testing by carrying sediment discharged during a test run back to the main reservoir feed pump more

quickly. Turning the heater off allowed any water movement in the reservoir to stop before the beginning of testing. The test reservoir temperature was recorded at 30 second intervals by a Lascar thermometer and temperature logger over the duration of each test.

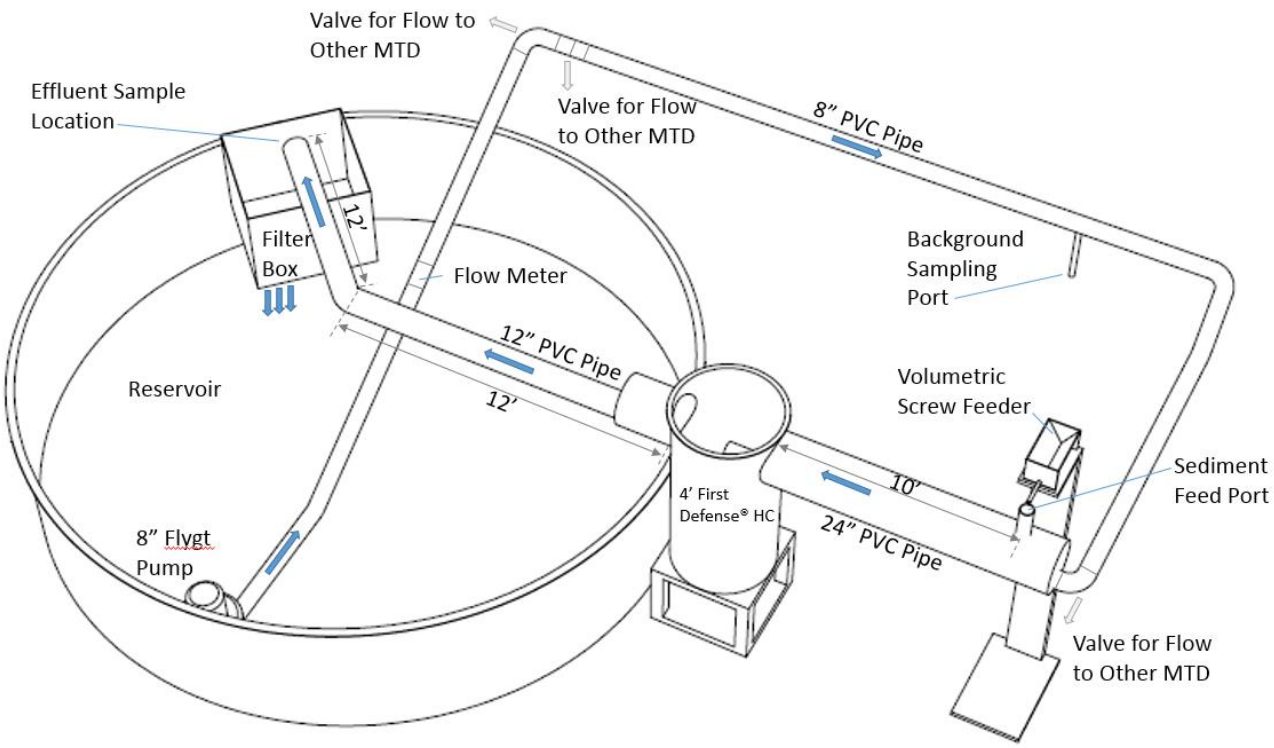

Figure 5 Laboratory Testing Arrangement

Three flow isolation valves were located between the Flygt pump and the FDHC, which would allow flow to bypass the FDHC if fully opened. These valves were installed as part of the piping network to direct flow to three other manufactured stormwater and wastewater treatment systems installed at the test facility along the same piping network, and were fully closed throughout the entire period when the FDHC testing was conducted.

A background sampling port was installed about 27 feet upstream of the FDHC. The FDHC effluent discharged freely from the effluent pipework, where grab samples were taken. The free discharge flowed through a filter box fitted with 1 micron filter socks in order to remove the majority of fine sediment that remained in the flow stream (**Figure 6**). The filter box was located on the opposite side of the reservoir as the submersible pump in order to keep the background concentration from surpassing the maximum allowable limit over the duration of the removal efficiency tests.

Figure 6 Effluent Sampling Location Situated above the Filter Box

Total Suspended Solids Removal Efficiency Laboratory Test Setup

For the removal efficiency test runs, test sediment was introduced into the flow at a consistent, calibrated rate by an Auger Feeder Model VF-2 volumetric screw feeder situated atop a 4-inch port in the 2 foot diameter inlet pipe located 10 feet upstream of the FDHC test unit. The location of the port is shown in **Figure 7**.

Figure 7 Influent Feed Port for TSS Removal Efficiency Testing

The FDHC sump measures 18 inches in height from the bottom of the sump. In line with the

protocol requirements, it was fitted with a false bottom positioned 9 inches from the true sump bottom to simulate a 50% full condition (**Figure 8**). It was secured to the chamber and sealed around the edges to prevent any material from collecting below.

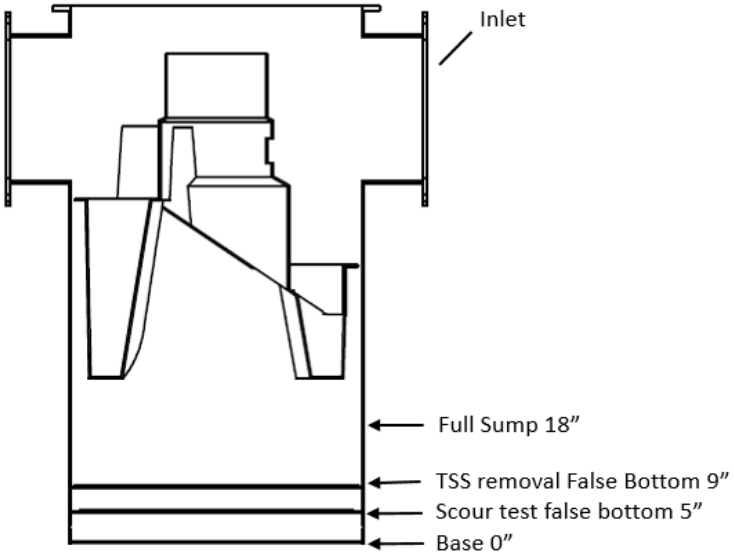

Figure 8 False Bottom Positions used during FDHC Testing

Scour Test Laboratory Setup

To simulate the 50% full condition for the scour test, the false bottom was set 5 inches above the sump floor (**Figure 8**) and 4 inches of the scour test sediment blend was pre-loaded on top of the false bottom, bringing the level of sump contents to 9 inches from the sump bottom.

2.3 Test Sediment

Test Sediment Feed for Suspended Solids Removal Efficiency Testing

The test sediment used for the Suspended Solids Removal Efficiency Testing was an in-house blend of high purity silica (SiO_2 99.8%) supplied by AGSCO Corporation and U.S. Silica, Inc., both commercial silica suppliers. Prior to the start of the removal efficiency testing, a total of five batches of test sediment were blended by Hydro International. Three sediment samples and one spare sample approximately 400 mL in volume were composited from 80 mL subsamples collected from each of the 5 batches under the supervision of the independent observer. The 4 samples were sealed, signed and packaged for independent transport to the outside laboratory under the supervision of the independent observer. After the samples were taken, the 5 batches were sealed and set aside until use. The independent laboratory, GeoTesting Express, analyzed the particle size distribution of each of the 3 samples and the spare sample using ASTM D 422-63. The particle size distributions of each of the 3 samples were averaged and reported as the overall particle size distribution. The particle size distribution of the spare sample was found to meet the protocol specification, however it was not included in the reported average particle size

distribution (PSD) because the protocol specifically states that three samples shall be analyzed and averaged.

Scour Test Sediment

The test sediment used for the Scour Testing was high purity (99.8% SiO_2) silica blended by AGSCO Corporation, an independent commercial silica supplier, to meet the specified particle size distribution of the protocol. The scour test sediment was delivered to Hydro International prepackaged, in sealed 50-lb bags. Under observation of the independent observer, three 250 mL subsamples were taken from randomly selected areas of the sump. The subsamples were then sealed and signed under observation of the independent observer and analyzed at the Hydro International laboratory for PSD analysis under the observation of the independent observer at a later date. The reported PSD is the average of the three subsample particle size distributions.

2.4 Removal Efficiency Testing Procedure

Removal efficiency testing was conducted in accordance with Section 5 of the NJDEP Laboratory Protocol for HDS MTDs. A total of five flow rates were tested: the 25%, 50%, 75%, 100% and 125% Maximum Treatment Flow Rate (MTFR). FB Environmental acted as the independent observer for the duration of all testing and water quality sample collection, sealing and packaging for transportation to the independent laboratory. Captured sediment was removed from the sump between each flow rate trial.

The test sediment mass was fed into the flow stream at a known rate using a screw auger with a calibrated funnel. Sediment was introduced at a rate within 10% of the targeted value of 200 mg/L influent concentration throughout the duration of the testing.

Six calibration samples were taken from the injection point. The calibration samples were timed at evenly spaced intervals over the total duration of the test for each tested flow rate and timed such that no collection interval would exceed 1 minute in duration. Each calibration sample was a minimum of 100 mL collected in a clean 1-liter container over an interval timed to the nearest second. These samples were weighed to the nearest milligram. The average influent TSS concentration was calculated using the total mass of the test sediment added during dosing divided by the volume of water that flowed through the MTD during dosing (**Equation 1**). The mass extracted for calibration samples was subtracted from the total mass introduced to the system when removal efficiency was subsequently calculated. The volume of water that flows through the MTD was calculated by multiplying the average flow rate by the time of sediment injection only.

$$\textbf{Average Influent Concentration} = \frac{\text{Total mass added}}{\text{Total volume of water flowing through the MTD during addition of test sediment}}$$

Equation 1 Calculation for Average Influent Concentration

During each flow rate test, the flow meter data logger recorded flow rate at a minimum of once per minute. The Effluent Grab Sampling Method was used as per Section 5D of the protocol. Once a constant rate of flow and test sediment feed were established, a minimum of three MTD detention times passed before the first effluent sample was collected. All effluent samples were collected in clean half-liter bottles using a sweeping grab sampling motion through the effluent discharge as described in Section 5D of the protocol. Samples were then time stamped and placed into a box for transportation to the analytical laboratory.

The time interval between sequential samples was evenly spaced during the test sediment feed period to obtain 15 samples for each flow rate. The water temperature was recorded at 30 second intervals to ensure that it did not exceed 80 degrees Fahrenheit at any time.

Background samples were taken at the background sample port located upstream of the FDHC test setup. Influent background samples were taken at the same time as odd numbered effluent grab samples (first, third, fifth, etc.). The collection time for each background and effluent sample was recorded. Each collected sample was time stamped, sealed and signed by the independent observer.

At the conclusion of the test all of the collected effluent and background water quality samples were placed into a delivery box, the box was sealed and the seal was signed by the independent observer. All samples were analyzed by Maine Environmental Laboratory in accordance with ASTM D3977-97 (re-approval 2007) "Standard Test Methods for Determining Sediment Concentrations in Water Samples".

The background data were plotted on a curve for use in adjusting the effluent samples for background concentration. The FDHC removal efficiency for each tested flow rate was calculated as per **Equation 2**.

$$\textbf{Removal Efficiency (\%)} = \frac{\left(\text{Average Influent Concentration} - \text{Adjusted Average Effluent* Concentration}\right)}{\text{Average Influent Concentration}} \times 100$$

* Adjusted for background concentration

Equation 2 Equation for Calculating Removal Efficiency

2.5 Scour Testing Procedure

To simulate a 50% full sump condition, the FDHC sump false bottom was set to a height of 5 inches and then topped with 4 inches of scour test sediment. The sediment was leveled, then the FDHC was filled with clear water at a slow rate as to not disturb the sediment prior to the beginning of testing. In line with the protocol, scour testing was begun less than 96 hours after the sump was pre-loaded with test sediment. All setup measurements, testing and sample collection procedures were observed by the independent observer.

Scour testing began by slowly introducing flow and, in less than 5 minutes, ramping up the flow rate until it reached >200% of the MTFR. The flow rate was recorded at a minimum of once per minute so that the effluent samples could be compared to corresponding flow rates. The flow rate remained constant at the target maximum flow rate for the remainder of the test duration.

Effluent samples were collected and time stamped every 2 minutes after the target flow rate was reached. A minimum of 15 effluent samples were taken over the duration of the test. The effluent samples were collected in half liter bottles using the grab sampling method as described in Section 5D of the protocol. Temperature readings of the test water were recorded every 30 seconds to ensure it did not exceed 80 degrees Fahrenheit at any point during the test.

Eight background samples were collected at evenly spaced intervals throughout the duration of the target maximum flow rate testing. The background samples were drawn from the background sample port located upstream of the FDHC.

At the conclusion of the test all of the collected effluent and background water quality samples were placed into a delivery box, the box was sealed and the seal was signed by the independent observer. All samples were analyzed by Maine Environmental Laboratory in accordance with ASTM D3977-97 (re-approval 2007) "Standard Test Methods for Determining Sediment Concentrations in Water Samples".

3. Performance Claims

In line with the NJDEP verification procedure, FDHC performance claims are outlined below.

Total Suspended Solids Removal Rate

The TSS removal rate of the FDHC is dependent upon flow rate, particle density and particle size. For the particle size distribution and weighted calculation method required by the NJDEP HDS MTD protocol, the 4-ft FDHC at a MTFR of 1.50 cfs will demonstrate at least 50% TSS removal efficiency.

Maximum Treatment Flow Rate

The MTFR for the 4-ft FDHC was demonstrated to be 673 gpm (1.50 cfs), which corresponds to a surface loading rate of 53.6 gpm/sf.

Sediment Storage Depth and Volume

The maximum sediment storage depth of the FDHC is 18 inches. Available sediment storage volume varies with each FDHC model, as FDHC model dimensions increase in diameter. The available sump volume for a 4-ft FDHC model is 0.70 cubic yards. The maximum sediment storage depth is 9 inches, which corresponds to a 50% full sump capacity (or 0.35 cubic yards) for the standard model. Refer to **Table A-2** in the Verification Appendix for the 50% sump full capacities for other FDHC model sizes.

Effective Treatment Area and Effective Sedimentation Area

The effective treatment and sedimentation area of the FDHC model varies with model size, as it corresponds to the surface area of the FDHC model diameter. The tested 4-ft FDHC model has a treatment surface area of 12.56 square feet.

Detention Time and Volume

The detention time of the FDHC depends on flow rate and model size. The detention time is calculated by dividing the treatment volume by the flow rate. The treatment volume is defined as the volume between the pipe invert and the top of the sediment storage zone. For the tested 4-ft FDHC model at the MTFR of 1.50 cfs, the detention time is 29 seconds.

Online or Offline Installation

Based on the results of the Scour Testing shown in Section 4.4, the FDHC qualifies for online installation.

4. Supporting Documentation

The NJDEP Procedure (NJDEP, 2013a) for obtaining verification of a stormwater manufactured treatment device (MTD) from the New Jersey Corporation for Advanced Technology (NJCAT) requires that "copies of the laboratory test reports, including all collected and measured data; all data from performance evaluation test runs; spreadsheets containing original data from all performance test runs; all pertinent calculations; etc." be included in this section. This was discussed with NJDEP and it was agreed that as long as such documentation could be made available by NJCAT upon request that it would not be prudent or necessary to include all this information in this verification report.

4.1 Test Sediment PSD Analysis – Removal Efficiency Testing

Hydro International purchased two different grades of high purity silica (SiO_2 99.8%) supplied by two different commercial silica suppliers. These silica blends were mixed together at the proportions required to generate a test sediment that complied with the particle size distribution requirements specified in the NJDEP HDS MTD protocol.

Prior to the start of removal efficiency testing trials conducted in November 2015, 5 batches of test sediment were blended by Hydro International. Three composite sediment samples and one spare sample approximately 400 mL in volume were blended using 80 mL of sediment collected from 6 subsamples drawn from each of the 5 batches under the supervision of the independent observer. The samples were also sealed and packaged for independent transport to the outside laboratory under the supervision of the independent observer. The independent laboratory GeoTesting Express analyzed the particle size distribution of each sample using ASTM D 422-63. The test sediment was found to be slightly finer than the protocol specified sediment blend. The results and the comparison to the protocol specification are shown in **Table 1** and **Figure 9.**

Table 1 - Particle Size Distribution Results of Test Sediment Samples

Particle Size	% Finer					Difference from Protocol %
µm	Protocol	Sample 1	Sample 2	Sample 3	Test Sediment Average	
1000	100	100.0	100.0	100.0	100.0	0.0
500	95	96.0	96.0	96.0	96.0	-1.0
250	90	90.0	90.0	90.0	90.0	0.0
150	75	80.0	80.0	80.0	80.0	-5.0
100	60	61.1	61.9	60.4	61.1	-1.1
75	50	54.0	54.0	54.0	54.0	-4.0
50	45	49.5	49.1	49.4	49.3	-4.3
20	35	39.1	37.8	37.9	38.3	-3.3
8	20	23.2	22.8	22.2	22.7	-2.7
5	10	15.3	15.9	15.1	15.4	-5.4
2	5	5.5	6.5	5.5	5.8	-0.8

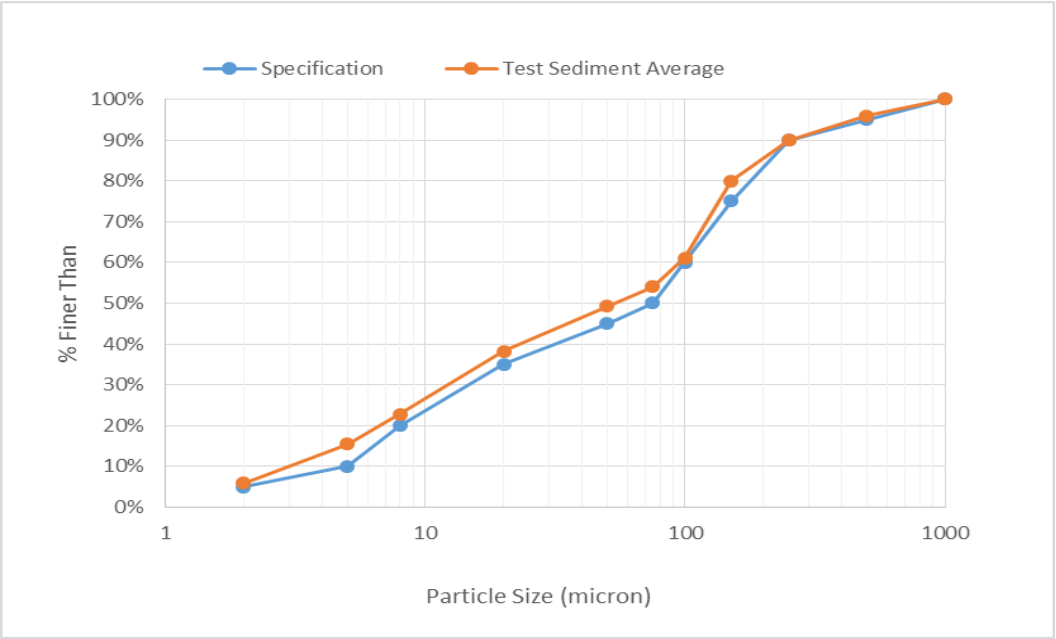

Figure 9 Average Test Sediment PSD vs Protocol Specification

4.2 Removal Efficiency Testing

In accordance with the NJDEP HDS Protocol, removal efficiency testing was executed on the First Defense® HC 4-ft. unit in order to establish the ability of the FDHC to remove the specified test sediment at 25%, 50%, 75%, 100% and 125% of the target MTFR. The target MTFR was 673 gpm (1.50 cfs). This target was chosen based on the ultimate goal of demonstrating greater than 50% annualized weighted solids removal as defined in the Protocol.

All results reported in this section were derived from test runs that fully complied with the terms of the protocol. None of the collection intervals of the calibration samples exceeded one minute in duration for any of the reported tests. The inlet feed concentration coefficient of variance (COV) did not exceed 0.10 for any flow rate trials.

The mean influent concentration was calculated using Equation 1 from *Section 2.4 Removal Efficiency Test Procedure*. The mean effluent concentration was adjusted by subtracting the measured background concentrations. No background TSS concentrations exceeded the 20 mg/L maximum allowed by the protocol. At no point did the water temperature exceed 80 ^{o}F.

25% MTFR Results

The 25% MTFR test was conducted in accordance with the NJDEP HDS Protocol at a target flow rate of 0.38 cfs. A summary of test readings, measurements and calculations are shown in **Table 2**. Feed calibration results are shown in **Table 3**. Background and effluent sampling measurements are shown in **Table 4**.

The 4-ft FDHC removed 61.1% of the test sediment at a flow rate of 0.38 cfs. **Table 5** shows that the QA/QC results for flow rate, feed rate and influent and effluent background concentrations were within the allowable parameters specified by the protocol.

Table 2 - Summary of 4-ft FDHC 25% MTFR Test

Trial Date	Target Flow (cfs)/(gpm)	Detention Time (sec)	Target Sediment Concentration (mg/L)	Target Feed Rate (mg/min)	Test Duration (Min)
11/02/2015	0.38 /168.4	116	200	130,995	44:36
Measured Values					
Mean Flow Rate (cfs)/(gpm)	**Mean Influent Concentration[1] (mg/L)**	**Max. Water Temperature °C / °F**	**Mean Adjusted Effluent Concentration (mg/L)**	**Average Removal Efficiency**	**QA/QC Compliance**
0.38 /169.0	205.0	25.5 / 77.9	79.7	61.1%	YES

[1] The mean influent concentration reported is calculated by dividing the entire mass of test sediment injected into the flow stream over the duration of the test divided by the total flow during the injection of test sediment.

Table 3 - 4-ft FDHC 25% MTFR Test Calibration Results

Target Concentration	200 mg/L	Target Feed Rate		130,995 mg/min	
Sample ID	**Sample Time (min)**	**Sample Mass (g)**	**Sample Duration (sec)**	**Feed Rate (mg/min)**	**Calculated Influent Concentration (mg/L)**
Feed Rate 1	0:00	136.255	60	136,255	213
Feed Rate 2	8:42	128.774	60	128,774	201
Feed Rate 3	17:24	129.323	60	129,323	202
Feed Rate 4	26:06	130.640	60	130,640	204
Feed Rate 5	34:48	129.336	60	129,336	202
Feed Rate 6	43:29	135.498	60	135,498	212
			Mean	131,638	**206**

Table 4 – 4-ft FDHC 25% MTFR Background and Effluent Measurements

Sample ID	Time (min)	Concentration (mg/L)		
Background 1	7:42	2		
Background 2	8:42	2		
Background 3	16:54	2		
Background 4	25:06	6		
Background 5	26:06	7		
Background 6	34:18	8		
Background 7	42:29	12		
Background 8	43:29	12		
Sample ID	**Time (min)**	**Concentration (mg/L)**	**Associated Background Concentration (mg/L)**	**Adjusted Concentration (mg/L)**
Effluent 1	7:42	81	2	79
Effluent 2	8:12	81	2	79
Effluent 3	8:42	79	2	77
Effluent 4	16:24	80	2	78
Effluent 5	16:54	77	2	75
Effluent 6	17:24	80	4	76
Effluent 7	25:06	83	6	77
Effluent 8	25:36	83	6.5	77
Effluent 9	26:06	86	7	79
Effluent 10	33:48	90	7.5	83
Effluent 11	34:18	90	8	82
Effluent 12	34:48	89	10	79
Effluent 13	42:29	92	12	80
Effluent 14	42:59	98	12	86
Effluent 15	43:29	102	12	90
	Mean	**86.1**	**6.3**	**79.7**

Table 5 – 4-ft FDHC 25% MTFR Trial QA/QC Results

Flow Rate			
Target (cfs / gpm)	Mean (cfs / gpm)	Coef. Of Variance	Acceptable Parameters Coef. Of Variance
0.38 / 168.4	0.38 / 169.0	0.019	<0.03
Feed Rate			
Target (mg/min)	Mean (mg/min)	Coef. Of Variance	Acceptable Parameters Coef. Of Variance
130,995	131,638	0.025	<0.1
Influent Concentration			
Target (mg/L)	Mean (mg/L)	Coef. Of Variance	Acceptable Parameters Coef. Of Variance
200	205	0.025	<0.1
Background Concentration			
Low (mg/L)	High (mg/L)	Mean (mg/L)	Acceptable Threshold (mg/L)
2	12	6.3	<20

50% MTFR Results

The 4-ft FDHC 50% MTFR test was conducted in accordance with the NJDEP HDS protocol at a target flow rate of 0.75 cfs. The 50% MTFR test results are shown in **Table 6**. Calibration results are shown in **Table 7**. Background and effluent results are shown in **Table 8**.

The 4-ft FDHC removed 53.8% of the test sediment at a flow rate of 0.75 cfs. **Table 9** shows that the QA/QC results for flow rate, feed rate and influent and effluent background concentrations were within the allowable parameters specified by the protocol.

Table 6 – Summary of 4-ft FDHC 50% MTFR Test

Trial Date	Target Flow (cfs) / (gpm)	Detention Time (sec)	Target Sediment Concentration (mg/L)	Target Feed Rate (mg/min)	Test Duration (Min)
11/04/2015	0.75 / 336.8	58	200	261,990	24:56
Measured Values					
Mean Flow Rate (cfs) / (gpm)	**Mean Influent Concentration[1] (mg/L)**	**Max. Water Temperature °C / °F**	**Mean Adjusted Effluent Concentration (mg/L)**	**Average Removal Efficiency**	**QA/QC Compliance**
0.75 / 337.5	204.7	25.1 / 77.2	94.6	53.8%	YES

[1] The mean influent concentration reported is calculated by dividing the entire mass of test sediment injected into the flow stream over the duration of the test divided by the total flow during the injection of test sediment.

Table 7 – 4-ft FDHC 50% MTFR Test Calibration Results

Target Concentration	200 mg/L	Target Feed Rate		261,990 mg/min	
Sample ID	**Sample Time (min)**	**Sample Mass (g)**	**Sample Duration (sec)**	**Feed Rate (mg/min)**	**Calculated Influent Concentration (mg/L)**
Feed Rate 1	0:00	132.832	30	265,664	208
Feed Rate 2	4:51	135.837	30	271,674	213
Feed Rate 3	9:42	129.512	30	259,024	203
Feed Rate 4	14:33	134.162	30	268,324	210
Feed Rate 5	19:24	129.638	30	259,276	203
Feed Rate 6	24:15	129.169	30	258,338	202
			Mean	**263,717**	**206**

Table 8 – 4-ft FDHC 50% MTFR Background and Effluent Measurements

Sample ID	Time (min)	Concentration (mg/L)		
Background 1	3:51	2		
Background 2	4:51	2		
Background 3	9:12	2		
Background 4	13:33	2		
Background 5	14:33	2		
Background 6	18:54	5		
Background 7	23:15	12		
Background 8	24:15	16		
Sample ID	**Time (min)**	**Concentration (mg/L)**	**Associated Background Concentration (mg/L)**	**Adjusted Concentration (mg/L)**
Effluent 1	3:51	90	2	88
Effluent 2	4:21	94	2	92
Effluent 3	4:51	99	2	97
Effluent 4	8:42	98	2	96
Effluent 5	9:12	100	2	98
Effluent 6	9:42	98	2	96
Effluent 7	13:33	95	2	93
Effluent 8	14:03	96	2	94
Effluent 9	14:33	95	2	93
Effluent 10	18:24	98	3.5	95
Effluent 11	18:54	103	5	98
Effluent 12	19:24	102	8.5	94
Effluent 13	23:15	106	12	94
Effluent 14	23:45	113	14	99
Effluent 15	24:15	108	16	92
	Mean	**99.7**	**5.1**	**94.6**

Table 9 – 4-ft FDHC 50% MTFR Trial QA/QC Results

Flow Rate			
Target (cfs / gpm)	Mean (cfs / gpm)	Coef. Of Variance	Acceptable Parameters Coef. Of Variance
0.75 / 336.8	0.75 / 337.5	0.008	<0.03
Feed Rate			
Target (mg/min)	Mean (mg/min)	Coef. Of Variance	Acceptable Parameters Coef. Of Variance
261,990	263,717	0.021	<0.1
Influent Concentration			
Target (mg/L)	Mean (mg/L)	Coef. Of Variance	Acceptable Parameters Coef. Of Variance
200	204.7	0.021	<0.1
Background Concentration			
Low (mg/L)	High (mg/L)	Mean (mg/L)	Acceptable Threshold (mg/L)
2	16	5.4	<20

75% MTFR Results

The 4-ft FDHC 75% MTFR test was conducted in accordance with the NJDEP HDS protocol at a target flow rate of 1.13 cfs (507 gpm). The 75% MTFR test results are shown in **Table 10**. Calibration results are shown in **Table 11**. Background and effluent results are shown in **Table 12.**

The 4-ft FDHC removed 51.3% of the test sediment at a flow rate of 1.13 cfs. **Table 13** shows that the QA/QC results for flow rate, feed rate and influent and effluent background concentrations were within the allowable parameters specified by the protocol.

Table 10 – Summary of 4-ft FDHC 75% MTFR Test

Trial Date	Target Flow (cfs) / (gpm)	Detention Time (sec)	Target Sediment Concentration (mg/L)	Target Feed Rate (mg/min)	Test Duration (Min)
11/06/2015	1.13 / 507.2	39	200	393,600	18:34
Measured Values					
Mean Flow Rate (cfs / gpm)	**Mean Influent Concentration[1] (mg/L)**	**Max. Water Temperature °C / °F**	**Mean Adjusted Effluent Concentration (mg/L)**	**Average Removal Efficiency**	**QA/QC Compliance**
1.13 / 507.5	191.7	24.9 / 76.8	93.3	51.3%	YES

[1] The mean influent concentration reported is calculated by dividing the entire mass of test sediment injected into the flow stream over the duration of the test divided by the total flow during the injection of test sediment.

Table 11 – 4-ft FDHC 75% MTFR Test Calibration Results

Target Concentration	200 mg/L	Target Feed Rate		393,600 mg/min	
Sample ID	**Sample Time (min)**	**Sample Mass (g)**	**Sample Duration (sec)**	**Feed Rate (mg/min)**	**Calculated Influent Concentration (mg/L)**
Feed Rate 1	0:00	132.141	20	396,423	206
Feed Rate 2	3:34	129.181	20	387,543	202
Feed Rate 3	7:08	127.602	20	382,806	199
Feed Rate 4	10:42	121.658	20	364,974	190
Feed Rate 5	14:16	122.327	20	366,981	191
Feed Rate 6	17:50	122.845	20	368,535	192
			Mean	**377,877**	**197**

Table 12 – 4-ft FDHC 75% MTFR Background and Effluent Measurements

Sample ID	Time (min)	Concentration (mg/L)		
Background 1	2:34	2		
Background 2	3:34	2		
Background 3	6:38	2		
Background 4	9:42	2		
Background 5	10:42	2		
Background 6	13:46	14		
Background 7	16:50	14		
Background 8	17:50	15		
Sample ID	**Time (min)**	**Concentration (mg/L)**	**Associated Background Concentration (mg/L)**	**Adjusted Concentration (mg/L)**
Effluent 1	2:34	87	2	85
Effluent 2	3:04	95	2	93
Effluent 3	3:34	96	2	94
Effluent 4	6:08	96	2	94
Effluent 5	6:38	98	2	96
Effluent 6	7:08	104	2	102
Effluent 7	9:42	99	2	97
Effluent 8	10:12	93	2	91
Effluent 9	10:42	100	2	98
Effluent 10	13:16	103	8	95
Effluent 11	13:46	98	14	84
Effluent 12	14:16	100	14	86
Effluent 13	16:50	102	14	88
Effluent 14	17:20	111	14.5	97
Effluent 15	17:50	115	15	100
	Mean	**99.8**	**6.5**	**93.3**

Table 13 – 4-ft FDHC 75% MTFR Trial QA/QC Results

Flow Rate			
Target (cfs / gpm)	Mean (cfs / gpm)	Coef. Of Variance	Acceptable Parameters Coef. Of Variance
1.13 / 507.2	1.13 / 507.5	0.006	<0.03
Feed Rate			
Target (mg/min)	Mean (mg/min)	Coef. Of Variance	Acceptable Parameters Coef. Of Variance
393,600	377,877	0.034	<0.1
Influent Concentration			
Target (mg/L)	Mean (mg/L)	Coef. Of Variance	Acceptable Parameters Coef. Of Variance
200	191.7	0.034	<0.1
Background Concentration			
Low (mg/L)	High (mg/L)	Mean (mg/L)	Acceptable Threshold (mg/L)
2	15	6.6	<20

100% MTFR Results

The 4-ft FDHC 100% MTFR test was conducted in accordance with the NJDEP HDS protocol at a target flow rate of 1.50 cfs (675 gpm). The 100% MTFR test results are shown in **Table 14**. Calibration results are shown in **Table 15**. Background and effluent results are shown in **Table 16.**

The 4-ft FDHC removed 46.0% of the test sediment at a flow rate of 1.50 cfs. **Table 17** shows that the QA/QC results for flow rate, feed rate and influent and effluent background concentrations were within the allowable parameters specified by the protocol.

Table 14 – Summary of 4-ft FDHC 100% MTFR Test

Trial Date	Target Flow (cfs) / (gpm)	Detention Time (sec)	Target Sediment Concentration (mg/L)	Target Feed Rate (mg/min)	Test Duration (Min)
11/10/2015	1.50 / 675.2	29	200	523,980	15:50
Measured Values					
Mean Flow Rate (cfs / gpm)	**Mean Influent Concentration (mg/L)[1]**	**Max. Water Temperature °C / °F**	**Mean Adjusted Effluent Concentration (mg/L)**	**Average Removal Efficiency**	**QA/QC Compliance**
1.50 / 674.1	204.3	24.8 / 76.6	110.3	46.0%	YES

[1] The mean influent concentration reported is calculated by dividing the entire mass of test sediment injected into the flow stream over the duration of the test divided by the total flow during the injection of test sediment.

Table 15 – 4-ft FDHC 100% MTFR Test Calibration Results

Target Concentration	200 mg/L	Target Feed Rate		523,980 mg/min	
Sample ID	**Sample Time (min)**	**Sample Mass (g)**	**Sample Duration (sec)**	**Feed Rate (mg/min)**	**Calculated Influent Concentration (mg/L)**
Feed Rate 1	0:00	180.656	20	541,968	212
Feed Rate 2	3:00	180.055	20	540,165	212
Feed Rate 3	6:01	178.465	20	535,395	210
Feed Rate 4	9:01	175.592	20	526,776	206
Feed Rate 5	12:02	171.389	20	514,167	201
Feed Rate 6	15:02	167.750	20	503,250	197
			Mean	526,954	**206**

Table 16 – 4-ft FDHC 100% MTFR Background and Effluent Measurements

Sample ID	Time (min)	Concentration (mg/L)		
Background 1	2:00	4		
Background 2	3:00	2		
Background 3	5:31	2		
Background 4	8:01	2		
Background 5	9:01	2		
Background 6	11:32	6		
Background 7	14:02	12		
Background 8	15:02	15		
Sample ID	**Time (min)**	**Concentration (mg/L)**	**Associated Background Concentration (mg/L)**	**Adjusted Concentration (mg/L)**
Effluent 1	2:00	99	4	95
Effluent 2	2:30	107	3	104
Effluent 3	3:00	112	2	110
Effluent 4	5:01	111	2	109
Effluent 5	5:31	119	2	117
Effluent 6	6:01	116	2	114
Effluent 7	8:01	109	2	107
Effluent 8	8:31	114	2	112
Effluent 9	9:01	115	2	113
Effluent 10	11:02	119	4	115
Effluent 11	11:32	114	6	108
Effluent 12	12:02	123	9	114
Effluent 13	14:02	122	12	110
Effluent 14	14:32	132	13.5	119
Effluent 15	15:02	123	15	108
	Mean	**115.7**	**5.4**	**110.3**

Table 17 – 4-ft FDHC 100% MTFR Trial QA/QC Results

Flow Rate			
Target (cfs / gpm)	Mean (cfs / gpm)	Coef. Of Variance	Acceptable Parameters Coef. Of Variance
1.50 / 675.2	1.50 / 674.1	0.007	<0.03
Feed Rate			
Target (mg/min)	Mean (mg/min)	Coef. Of Variance	Acceptable Parameters Coef. Of Variance
523,980	526,954	0.03	<0.1
Influent Concentration			
Target (mg/L)	Mean (mg/L)	Coef. Of Variance	Acceptable Parameters Coef. Of Variance
200	204.3	0.03	<0.1
Background Concentration			
Low (mg/L)	High (mg/L)	Mean (mg/L)	Acceptable Threshold (mg/L)
2	15	5.6	<20

125% MTFR Results

The 4-ft FDHC 125% MTFR test was conducted in accordance with the NJDEP HDS protocol at a target flow rate of 1.88 cfs (842 gpm). The 125% MTFR test results are shown in **Table 18**. Calibration results are shown in **Table 19**. Background and effluent results are shown in **Table 20.**

The 4-ft FDHC removed 43.5% of the test sediment at a flow rate of 1.88 cfs. **Table 21** shows that the QA/QC results for flow rate, feed rate and influent and effluent background concentrations were within the allowable parameters specified by the protocol.

Table 18 – Summary of 4-ft FDHC 125% MTFR Test

Trial Date	Target Flow (cfs / gpm)	Detention Time (sec)	Target Sediment Concentration (mg/L)	Target Feed Rate (mg/min)	Test Duration (Min)
11/16/2015	1.88 / 842.0	23	200	634,499	13:59
Measured Values					
Mean Flow Rate (cfs / gpm)	**Mean Influent Concentration[1] (mg/L)**	**Max. Water Temperature °C / °F**	**Mean Adjusted Effluent Concentration (mg/L)**	**Average Removal Efficiency**	**QA/QC Compliance**
1.88 / 842.3	201.8	24.8 / 76.7	114.0	43.5%	YES

[1] The mean influent concentration reported is calculated by dividing the entire mass of test sediment injected into the flow stream over the duration of the test divided by the total flow during the injection of test sediment.

Table 19 – 4-ft FDHC 125% MTFR Test Calibration Results

Target Concentration	200 mg/L	Target Feed Rate		634,499 mg/min	
Sample ID	**Sample Time (min)**	**Sample Mass (g)**	**Sample Duration (sec)**	**Feed Rate (mg/min)**	**Calculated Influent Concentration (mg/L)**
Feed Rate 1	0:00	230.390	20	691,170	217
Feed Rate 2	2:40	221.852	20	665,556	209
Feed Rate 3	5:21	224.366	20	673,098	211
Feed Rate 4	8:01	218.425	20	655,275	206
Feed Rate 5	10:42	210.833	20	632,499	198
Feed Rate 6	13:22	204.864	20	614,592	193
			Mean	655,365	**206**

Table 20 – 4-ft FDHC 125% MTFR Background and Effluent Measurements

Sample ID	Time (min)	Concentration (mg/L)		
Background 1	1:40	2		
Background 2	2:40	2		
Background 3	4:51	2		
Background 4	7:01	2		
Background 5	8:01	2		
Background 6	10:12	5		
Background 7	12:22	11		
Background 8	13:22	11		
Sample ID	**Time (min)**	**Concentration (mg/L)**	**Associated Background Concentration (mg/L)**	**Adjusted Concentration (mg/L)**
Effluent 1	1:40	110	2	108
Effluent 2	2:10	121	2	119
Effluent 3	2:40	108	2	106
Effluent 4	4:21	128	2	126
Effluent 5	4:51	119	2	117
Effluent 6	5:21	119	2	117
Effluent 7	7:01	114	2	112
Effluent 8	7:31	115	2	113
Effluent 9	8:01	115	2	113
Effluent 10	9:42	119	3.5	116
Effluent 11	10:12	119	5	114
Effluent 12	10:42	114	8	106
Effluent 13	12:22	122	11	111
Effluent 14	12:52	124	11	113
Effluent 15	13:22	130	11	119
	Mean	**118.5**	**4.5**	**114.0**

Table 21 – 4-ft FDHC 125% MTFR Trial QA/QC Results

Flow Rate			
Target (cfs / gpm)	Mean (cfs / gpm)	Coef. Of Variance	Acceptable Parameters Coef. Of Variance
1.88 / 842.0	1.88 / 842.3	0.005	<0.03
Feed Rate			
Target (mg/min)	Mean (mg/min)	Coef. Of Variance	Acceptable Parameters Coef. Of Variance
634,499	655,365	0.04	<0.1
Influent Concentration			
Target (mg/L)	Mean (mg/L)	Coef. Of Variance	Acceptable Parameters Coef. Of Variance
200	201.8	0.04	<0.1
Background Concentration			
Low (mg/L)	High (mg/L)	Mean (mg/L)	Acceptable Threshold (mg/L)
2	11	4.6	<20

Excluded Data/Results

Section 5.D, *Verification Report Requirements: Supporting Documentation* of the NJDEP Process document requires that all data from performance evaluation test runs excluded from the computation of the removal rate or verification analysis be disclosed. No test runs were aborted during the testing process, and no data from tests that did not meet protocol requirements have been excluded from the results presented in the previous section of this report.

One duplicate sample was collected for each effluent water quality sample. These samples were sent to an independent analytical laboratory for particle size distribution analysis. As effluent particle size analysis is not required by the NJDEP protocol, the data are not presented in this report.

The protocol requires that three samples of removal efficiency test sediment be collected and analyzed for particle size distribution, and that the average particle size of the three samples be reported. During the collection of the three sediment samples, a fourth sample was taken in case of spoilage or loss of one of the samples. This fourth sample was analyzed for particle size distribution and met the PSD specified by the protocol. The fourth sample was not included in the reported average particle size distribution, as the protocol specifically states that three samples shall be analyzed for particle size distribution.

Annualized Weighted TSS Removal Efficiency

The NJDEP-specified annual weighted TSS removal efficiency calculation is shown in **Table 22** using the results from the removal efficiency testing.

Testing in accordance with the provisions detailed in the NJDEP HDS Protocol demonstrate that the 4-ft FDHC achieved a 52.93% annualized weighted TSS removal at an MTFR of 1.50 cfs (53.6 gpm/sf). This testing demonstrates that the 4-ft FDHC exceeds the NJDEP requirement that HDS devices demonstrate at least 50% weighted annualized TSS removal efficiency at the MTFR.

Table 22 – Annualized Weighted TSS Removal of the 4-ft FDHC

% MTFR	Mean Flow Rate Tested (cfs)	Actual % MTFR	Measured Removal Efficiency	Annual Weighting Factor	Weighted Removal Efficiency
25	0.38	25.3	61.1%	0.25	15.28%
50	0.75	50.0	53.8%	0.3	16.14%
75	1.13	75.3	51.3%	0.2	10.26%
100	1.50	100.0	46.0%	0.15	6.90%
125	1.88	125.3	43.5%	0.1	4.35%
Weighted Annualized TSS Removal Efficiency					**52.93%**

4.3 Test Sediment PSD Analysis - Scour Testing

The scour test sediment, as described in Section 2.3 *Test Sediment*, was high purity (99.8% SiO_2) silica blended by an independent commercial silica supplier to meet the particle size distribution specified by the NJDEP HDS protocol. Three 250 mL subsamples were taken from the sump and analyzed for particle size analysis at the Hydro International lab under the supervision of the independent observer.

The results showed that the average test sediment was found to meet the particle size distribution specified by the protocol (**Table 23**), with no measured value being greater than two percentage points greater than the target percent finer value. A comparison of the PSD specified by the protocol and average PSD of the test sediment is shown in **Figure 10**.

Table 23 – Scour Test Sediment Particle Size Distribution Comparison

Particle Size (µm)	% Finer					% Difference from Spec
	NJDEP Spec	Sample 1	Sample 2	Sample 3	Average	
1000	100	100.0	100.0	100.0	100.0	0.0
500	90	95.1	95.0	95.2	95.1	-5.1
250	55	64.0	64.6	62.8	63.8	-8.8
150	40	49.8	50.0	47.8	49.2	-9.2
100	25	23.4	23.6	22.0	23.0	2.0
75	10	10.6	11.0	10.0	10.5	-0.5
50	0	1.3	1.6	1.3	1.4	-1.4

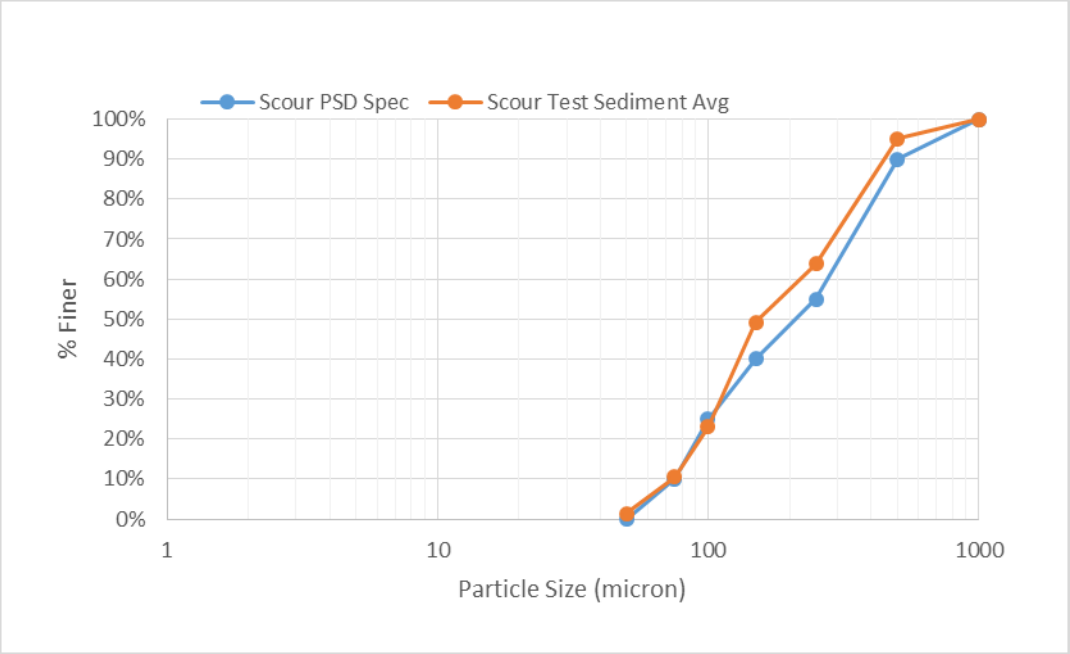

Figure 10 Scour Test Sediment PSD vs Protocol Specification

4.4 Scour Testing for Online Installation

The FDHC underwent scour testing in line with Section 4 of the NJDEP HDS protocol at a flow rate greater than 200% of its MTFR in order to verify its suitability for online use. For the 4-ft FDHC with an MTFR of 1.50 cfs (673 gpm) the average scour test flow rate had to be at least 3.0 cfs (1,344 gpm). The average flow rate for the scour test was 3.24 cfs, which represents 216% of the MTFR. The maximum water temperature during testing was 76.8°F. The flow rate COV was 0.007. Background concentrations measured 2 mg/L for all samples, which complies with the 20 mg/L maximum background concentration specified by the test protocol. Flow and background concentration measurements are shown in **Table 24**.

Table 24 – Flow and Background Concentration Results for 4-ft FDHC Scour Testing

Trial Date		11/18/2015	Average Flow Rate =	3.24cfs
Mean Temperature		24.5°C / 76.1°F	Flow Rate COV	0.007
Sample ID	Time (min)	Concentration (mg/L)		
Background 1	2:00	2		
Background 2	6:00	2		
Background 3	10:00	2		
Background 4	14:00	2		
Background 5	18:00	2		
Background 6	22:00	2		
Background 7	26:00	2		
Background 8	30:00	2		

Unadjusted effluent concentrations ranged from 2 mg/L to 4 mg/L with a mean of 2.1 mg/L. When adjusted for background concentrations, the effluent concentrations range from 0 to 2 mg/L. The mean adjusted effluent concentration was 0.1 mg/L (**Table 25**).

Table 25 – Effluent Concentration Results for 4-ft FDHC Scour Test at 216% MTFR

Sample ID	Time (min)	Effluent Concentration with Background Concentrations (mg/L)	Background Concentration (mg/L)	Adjusted Effluent Concentration (mg/L)
Effluent 1	2:00	2	2	0
Effluent 2	4:00	2	2	0
Effluent 3	6:00	2	2	0
Effluent 4	8:00	2	2	0
Effluent 5	10:00	2	2	0
Effluent 6	12:00	2	2	0
Effluent 7	14:00	2	2	0
Effluent 8	16:00	2	2	0
Effluent 9	18:00	2	2	0
Effluent 10	20:00	2	2	0
Effluent 11	22:00	2	2	0
Effluent 12	24:00	2	2	0
Effluent 13	26:00	2	2	0
Effluent 14	28:00	4	2	2
Effluent 15	30:00	2	2	0
	Mean	**2.1**	**2**	**0.1**

Excluded Data/Results

The protocol requires the disclosure and discussion of any data collected as a part of the testing process that is excluded from the reported results. No test runs were aborted during the scour testing process, and no data from tests that did not meet protocol requirements have been excluded from the results presented in the scour testing section of this report.

5. Design Limitations

The FDHC is an engineered system for which Hydro International's engineers work with site designers to generate a detailed engineering submittal package for each installation. As such, design limitations are typically identified and managed during the design process. Design parameters and limitations are discussed in general terms below.

Required Soil Characteristics

The FDHC is a flow-through system contained within a water tight manhole. Therefore the FDHC can be installed and function as intended in all soil types.

Slope of Drainage Pipe

Hydro International recommends contacting our design engineers when the FDHC is going to be installed on a drainage line with a slope greater than 10%. With steeply sloping pipe, site specific parameters such as pipe size, online vs. offline arrangement of the FDHC and the frequency of peak flow are taken into consideration by the Hydro International design team.

Maximum Flow Rate

The maximum treatment flow rate (MTFR) of the FDHC is dependent upon model size. The recommended maximum peak flow rate is dependent on FDHC model size and other design and performance specifications. Hydro International recommends contacting their engineering staff with questions about managing high peak flow rates.

Maintenance Requirements

The FDHC should be inspected and maintained in line with the recommendations and guidelines set forth in the Operation and Maintenance Manual at: (http://www.hydro-int.com/UserFiles/downloads/FD_O%2BM_F1512.pdf). The sediment accumulation rate in the FDHC is dependent on site-specific characteristics such as site usage and topography. A more detailed discussion of inspection and maintenance requirements is discussed later in Section 6.

Driving head

Testing conducted according to ASTM Standard Test Methods C1745 / C1745M – 11: Standard Test Method for Measurement of Hydraulic Characteristics of Hydrodynamic Stormwater Separators and Underground Settling Devices showed that the headloss across the FDHC is a function of flow rate and pipe velocities. Generally, the FDHC headloss is estimated using Equation 3.

Equation 3 – Flow dependent headloss of the FDHC

Given H_L = FDHC headloss
H_u = measured pressure head or water elevation in the inlet or upstream pipe
H_d = measured pressure head or water elevation in the outlet or downstream pipe
G = gravitational constant, 32.2 ft/sec^2
V_u, V_d = calculated average flow velocities in the upstream and downstream pipes, respectively

$$H_L = (h_u + \frac{V_u^2}{2g}) - (h_d + \frac{V_d^2}{2g})$$

Installation limitations

Pick weights and installation procedures vary slightly with model size. Hydro International provides contractors with project-specific unit pick weights and installation instructions prior to delivery.

Configurations

The FDHC was designed for online applications in which the inlet and outlet are tied directly into the main drainage line, however the device can also be installed offline using external junction manholes (**Figure 11a-b**).

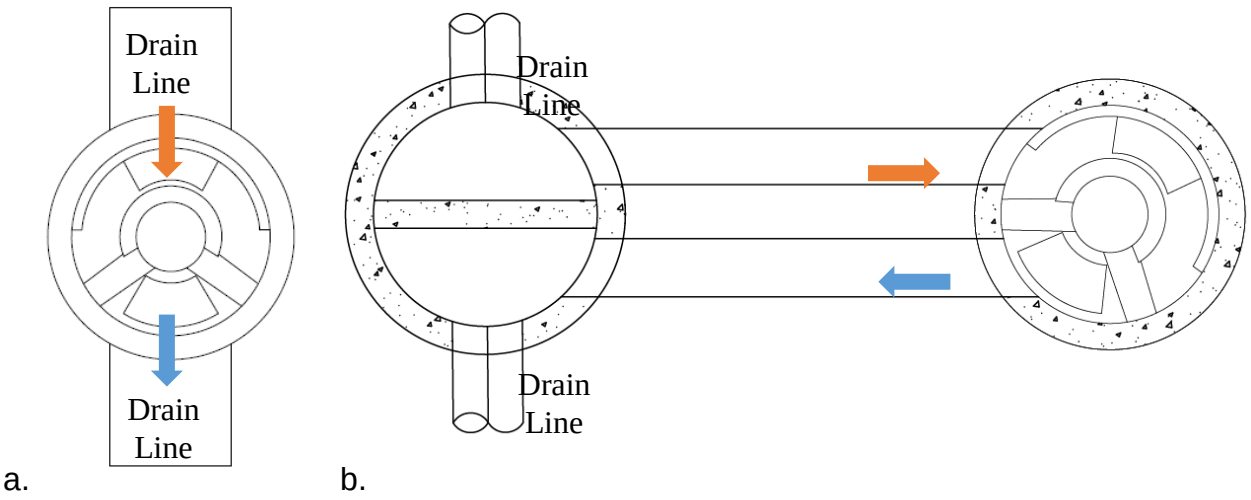

Figure 11 a) FDHC Online Application; b) FDHC Offline Application

In some cases, multiple inlet pipes can be accommodated depending on pipe size and pipe angles as long as at least six inches of concrete remains between inlet pipe knockouts and pipe angles are within 240° of the outlet centerline (**Figure 12**). Contact Hydro International for design assistance with multiple inlet pipes.

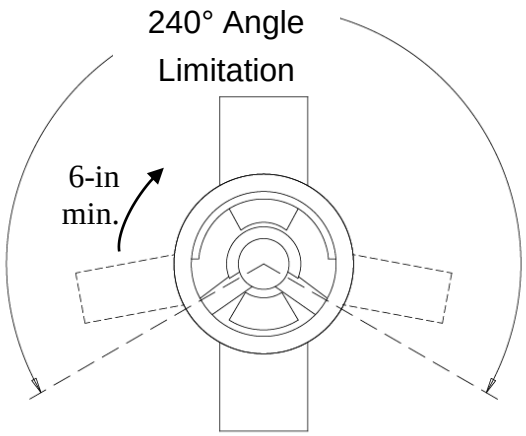

Figure 12 FDHC Design Accommodates Various Inlet Pipe Configurations

Load Limitations

Standard FDHC units are designed for HS-20 loading. Contact Hydro International engineering staff when heavier load ratings are required.

Pretreatment Requirements

The FDHC has no pre-treatment requirements.

Limitations on Tail water

As the FDHC includes an internal bypass, Hydro International recommends working with their engineering team if tail water is present to increase the available driving head to ensure that the full water quality treatment flow rate is treated prior to internal bypass.

Depth to seasonal high water table

Although the functionality of the FDHC is not impacted by high groundwater, Hydro International recommends consulting their engineering staff to determine whether the addition of anti-flotation collars to the base of the FDHC chamber are necessary to counterbalance buoyant forces.

Pipe Size

Each FDHC model has a maximum recommended inlet and outlet pipe size. When the diameter of the main storm drain line exceeds the maximum FDHC pipe size, Hydro International recommends contacting their engineering team. In some circumstances larger pipe sizes can be safely accommodated; otherwise Hydro International recommends the FDHC be designed in an offline configuration. The maximum recommended inlet and outlet pipe diameter for each FDHC model are shown in **Table A-2** of the Verification Appendix.

6. Maintenance Plans

The FDHC treats stormwater by removing pollutants from stormwater runoff and capturing them in the pollutant storage sump. Periodic removal of these captured pollutants is essential to the continuous, long-term functioning of the FDHC. When sediment and oil storage capacities are reached, the FDHC's ability to capture and store removed sediment and oil will be compromised.

Inspection and maintenance of the FDHC are simple procedures conducted from the surface. Neither inspection nor maintenance require purchasing spare parts or tools from Hydro International. The FDHC has one centrally located 30-in manhole lid to provide inspection and maintenance access to both the internal bypass chamber and treatment chamber.

Inspection

The required frequency of cleanout depends on site use and other site specific characteristics and should therefore be determined by inspecting the unit after installation. During the first year of operation, the unit should be inspected at least every six months to determine the rate of sediment and floatables accumulation. More frequent inspections are recommended at sites that would generate heavy solids loads, like parking lots with winter sanding or unpaved maintenance lots. A dipstick can be used to measured accumulated oil; a sediment probe can be used to determine the level of accumulated solids stored in the sump.

Hydro International recommends that the units are cleaned when sediment volumes reach 50% sump capacity. The standard sediment storage depth in the FDHC is 18 inches. Because FDHC model sizes vary in diameter, pollutant storage volumes vary with model size as shown in **Table 26**. When sediment and oil depths are measured during inspection, they should be recorded on the Operation & Maintenance manual log and compared to the as-built drawings of the FDHC to assess whether accumulated sediment has reach 9 inches in depth.

Table 26 – Pollutant Storage Capacities of the FDHC

Model	Oil Storage Volume (gal)	Sediment Volume at 50% Sump Capacity (yd^3)	Sediment Depth at 50% Sump Capacity (in)	Sump Volume (yd^3)	Sump Depth (in)
3-ft FDHC	125	0.20	9	0.4	18
4-ft FDHC	191	0.35	9	0.7	18
5-ft FDHC	300	0.55	9	1.1	18
6-ft FDHC	496	0.8	9	1.6	18
7-ft FDHC	720	1.05	9	2.1	18
8-ft FDHC	1,002	1.4	9	2.8	18

Maintenance

The interval of required clean-out should be determined by post-installation inspection of pollutant accumulation rates. If post-installation inspection cannot be conducted for some reason, Hydro International recommends the FDHC be cleaned out at least once per year. There is no need for man entry into the FDHC during maintenance. However, if man entry does occur then proper confined space entry procedures must be followed.

Floatable trash and debris can be removed by lifting the floatable access lid and using a netted skimming pole or a vactor truck to skim trash from the surface of the standing water. Accumulated oil must be vactored from the surface using a vactor truck or sump vac. Accumulated sediment can be removed by lifting the central access lid and dropping a vactor hose down the center shaft to the sump. The entire sump liquid volume does not necessarily need to be removed from the FDHC during maintenance.

When all pollutants have been removed from the FDHC, the manhole lids should be put securely back in place. Removed pollutants should be disposed of in accordance with local regulations and ordinances.

7. Statements

The following signed statements from the manufacturer, third-party observer and NJCAT are required to complete the NJCAT verification process.

In addition, it should be noted that this report has been subjected to public review (e.g. stormwater industry) and all comments and concerns have been satisfactorily addressed.

Stormwater Solutions

Hydro International

Turning Water Around...®

December 21, 2015

Dr. Richard Magee, Sc.D., P.E., BCEE
Technical Director
New Jersey Corporation for Advanced Technology
c/o Center for Environmental Systems
Stevens Institute of Technology
One Castle Point on Hudson
Hoboken, NJ 07030

Re: Verification of First Defense® HC to NJDEP HDS Laboratory Testing Protocol

Dear Dr. Magee:

Hydro International's First Defense® HC (FDHC) vortex separator for stormwater treatment recently underwent verification testing according to the NJDEP HDS Laboratory Testing Protocol. As required by the "Procedure for Obtaining Verification of a Stormwater Manufactured Treatment Device from New Jersey Corporation for Advanced Technology", this letter serves as Hydro International's statement that all procedures and requirements identified in the aforementioned protocol and process document were met or exceeded. The 4-ft FDHC removal efficiency and scour tests conducted at Hydro International's laboratory facility in Portland, Maine were done so under the direct supervision of FB Environmental Associates. All water quality samples were analyzed by the independent analytical lab, Maine Environmental Laboratory. The removal efficiency particle size distribution was analyzed by the independent analytical laboratory, GeoTesting Express. The scour test particle size distribution was analyzed at Hydro International's facility under the supervision of FB Environmental Associates. Additionally, the preparation of the verification report and the documentation contained therein fulfill the submission requirements of the process document and protocol.

If you have any questions or comments regarding the verification of the FDHC, please do not hesitate to contact us.

Sincerely,

Lisa Lemont, CPSWQ
Business Development Manager

Hydro International (Stormwater), 94 Hutchins Drive, Portland ME 04102
Tel: (207) 756-6200 Fax: (207) 756-6212 Web: www.hydro-int.com

Statement of Third Party Observer

STATEMENT OF THIRD PARTY OBSERVER

To: **Lisa Lemont, Hydro International, Portland, Maine**

From: Forrest Bell, FB Environmental Associates

Subject: **Third Party Review under *Procedure for Obtaining Verification of a Stormwater Manufactured Treatment Device from New Jersey Corporation for Advanced Technology* (NJDEP, January 25 2013)[1]**

Date: December 31, 2015

cc: Andrew Anastasio, Hydro International; Jeremy Fink, Hydro International
Margaret Burns, FB Environmental Associates

Statement of Third Party Observer

FB Environmental has served as the third-party observer for tests performed by Hydro International in October through December 2015. The tests assessed the First Defense HC Stormwater Treatment Device as a 50% Total Suspended Solids (TSS) removal device under the New Jersey Department of Environmental Protection certification. Tests were performed by Hydro International staff at their laboratory located at 94 Hutchinson Drive in Portland, Maine, to meet the standards described in *Procedure for Obtaining Verification of a Stormwater Manufactured Treatment Device from New Jersey Corporation for Advanced Technology* (NJDEP, January 25 2013)[1]. On May 10, 2014, we also submitted a statement of qualifications, as required by NJCAT MTD process.

A member of our staff verified compliance with the laboratory test protocol above, and our staff member was physically present to observe the full duration of all laboratory testing. We have also reviewed the data, calculations, and conclusions associated with the removal efficiency testing in the *Verification Testing Report for the First Defense® HC Stormwater Treatment Device* by Hydro International, dated December 29, 2015, and state that they conform to what we saw during our supervision as third-party observer.

Forrest Bell

Signed: Date: December 31, 2015

[1] Available at http://www.nj.gov/dep/stormwater/treatment.html

1 of 1

Statement of Disclosure

STATEMENT OF DISCLOSURE – THIRD PARTY OBSERVER

To: **Lisa Lemont, Hydro International, Portland, Maine**

From: Forrest Bell, FB Environmental Associates

Subject: **Third Party Observer Statement of Disclosure under *Procedure for Obtaining Verification of a Stormwater Manufactured Treatment Device from New Jersey Corporation for Advanced Technology* (NJDEP, January 25 2013)**[1]

Date: December 31, 2015

cc: Andrew Anastasio, Hydro International
Margaret Burns, FB Environmental Associates

Statement of Disclosure – Third Party Observer

FB Environmental has no financial conflict of interest regarding the test results of the stormwater device testing outlined in the *Verification Testing Report for the First Defense ® HC Stormwater Treatment Device* by Hydro International, dated December 29, 2015.

Disclosure Record

FB Environmental has provided the service of third party observer for tests performed by Hydro International in October through December of 2015. The tests assessed the First Defense HC Stormwater Treatment Device as a 50% Total Suspended Solids (TSS) removal device under the New Jersey Department of Environmental Protection certification as outlined in the *Verification Testing Report for the First Defense ® HC Stormwater Treatment Device* by Hydro International, dated December 29, 2015. Beyond this, FB Environmental and Hydro International have no relationships that would constitute a conflict of interest, as outlined in *Procedure for Obtaining Verification of a Stormwater Manufactured Treatment Device from New Jersey Corporation for Advanced Technology* (NJDEP 2013). For example, we have no ownership stake, do not receive commissions, do not have licensing agreements, and do not receive funds or grants beyond those associated with the testing program.

Forrest Bell — December 31, 2015

Signed: Date:

[1] Available at http://www.nj.gov/dep/stormwater/treatment.html

1 of 1

Center for Environmental Systems
Stevens Institute of Technology
One Castle Point
Hoboken, NJ 07030-0000

January 9, 2016

Titus Magnanao
NJDEP
Division of Water Quality
Bureau of Non-Point Pollution Control
401-02B
PO Box 420
Trenton, NJ 08625-0420

Dear Mr. Magnanao,

Based on my review, evaluation and assessment of the testing conducted on the First Defense® HC (FDHC) Stormwater Treatment Device by Hydro International and observed by FB Environmental Associates, the test protocol requirements contained in the "New Jersey Laboratory Testing Protocol to Assess Total Suspended Solids Removal by a Hydrodynamic Sedimentation Manufactured Treatment Device" (NJDEP HDS Protocol) were met or exceeded. Specifically:

Test Sediment Feed

The mean PSD of Hydro Internationals test sediments comply with the PSD criteria established by the NJDEP HDS protocol. The Hydro International removal efficiency test sediment PSD analysis was plotted against the NJDEP removal efficiency test PSD specification. The test sediment was shown to be slightly finer than the sediment blend specified by the protocol. The Hydro International scour test sediment PSD analysis was plotted against the NJDEP removal efficiency test PSD specification and shown to be much finer than specified by the protocol.

Removal Efficiency Testing

In accordance with the NJDEP HDS Protocol, removal efficiency testing was executed on the 4-ft. laboratory unit in order to establish the ability of the FDHC to remove the specified test sediment at 25%, 50%, 75%, 100% and 125% of the target MTFR. Prior to the start of testing Hydro International reviewed existing data and decided to utilize a target MTFR of 675 gpm (1.50 cfs). This target was chosen based on the ultimate goal of demonstrating greater than 50% annualized weighted solids removal as defined in the NJDEP HDS Protocol. The flow rates, feed rates and influent concentration all met the NJDEP HDS test protocol's coefficient of variance requirements and the background concentration for all five test runs never exceeded 20 mg/L.

Scour Testing

In order to demonstrate the ability of the FDHC to be used as an online treatment device scour testing was conducted at greater than 200% of MTFR in accordance with the NJDEP HDS Protocol. The average flow rate during the online scour test was 3.24 cfs, which represents 216% of the MTFR (MTFR = 1.50 cfs). Background concentrations were 2 mg/L throughout the scour testing, which complies with the 20 mg/L maximum background concentration specified by the test protocol. Unadjusted effluent concentrations ranged from 2 mg/L to 4 mg/L with a mean of 2.1 mg/L. When adjusted for background concentrations, the effluent concentrations range from 0 to 2 mg/L with a mean of 0.1 mg/L. These results confirm that the 4-ft. FDHC did not scour at 216% MTFR and meets the criteria for online use.

Maintenance Frequency

The predicted maintenance frequency for all models is 44 months.

Sincerely,

Richard S. Magee, Sc.D., P.E., BCEE

8. References

ASTM D422-63. *Standard Test Method for Particle-size Analysis of Soils.*

ASTM D3977-97. *Standard Test Methods for Determining Concentrations in Water Samples*.

Hydro International 2014. *Quality Assurance Project Plan for FDHC® NJDEP Testing.* Prepared by H.I.L. Technology, Inc. dba Hydro International. October, 2015.

NJDEP 2013a. *New Jersey Department of Environmental Protection Procedure for Obtaining Verification of a Stormwater Manufactured Treatment Device from New Jersey Corporation for Advanced Technology*. Trenton, NJ. January 25, 2013.

NJDEP 2013b. *New Jersey Department of Environmental Protection Laboratory Protocol to Assess Total Suspended Solids Removal by a Hydrodynamic Sedimentation Manufactured Treatment Device.* Trenton, NJ. January 25, 2013.

VERIFICATION APPENDIX

Introduction

- Manufacturer – Hydro International, 94 Hutchins Drive, Portland, ME 04102. *General Phone: (207)756-6200. Website:* www.hydro-int.com/us.

- MTD – First Defense® HC Stormwater Treatment Device. Verified First Defense® HC Models are shown in **Table A-1.**

.

- TSS Removal Rate – 50%

- On-line installation

Detailed Specification

- NJDEP sizing tables attached as **Table A-1** and **Table A-2**.

- New Jersey requires that the peak flow rate of the NJWQ Design Storm event of 1.25 inch in 2 hours shall be used to determine the appropriate size for the MTD.

- Pick weights and installation procedures vary slightly with model size. Hydro International provides contractors with project-specific unit pick weights and installation instructions prior to delivery.

- Maximum recommended sediment depth prior to cleanout is 9 inches for all model sizes.

- For a reference maintenance plan, download the First Defense® HC Operation and Maintenance Manual at: http://www.hydro-int.com/UserFiles/downloads/FD_O%2BM_F1512.pdf

- Under N.J.A.C. 7:8-5.5, NJDEP stormwater design requirements do not allow a hydrodynamic separator such as the First Defense® HC to be used in series with another hydrodynamic separator to achieve an enhanced total suspended solids (TSS) removal rate.

Table A-1 MTFRs and Required Sediment Removal Intervals for FDHC Models

First Defense® HC Model	Manhole Diameter (ft)	NJDEP 50% TSS Maximum Treatment Flow Rate (cfs)	Treatment Area (ft^2)	Hydraulic Loading Rate (gpm/ft^2)	50% Max Sediment Storage Volume (ft^3)	Required Sediment Removal Interval[1] (Months)
3-ft	3	0.85	7.1	53.58	5.30	44
4-ft	4	1.50	12.6	53.58	9.42	44
5-ft	5	2.35	19.6	53.58	14.7	44
6-ft	6	3.38	28.3	53.58	21.2	44
7-ft	7	4.60	38.5	53.58	28.9	44
8-ft	8	6.00	50.2	53.58	37.7	44

[1] Required sediment removal interval was calculated using the equation specified in Appendix B Part B of the NJDEP Laboratory Protocol for HDS MTDs:

$$\textbf{Sediment Removal Interval (months)} = \frac{\textbf{(50\% HDS MTD Max Sediment Storage Volume * 3.57)}}{\textbf{(MTFR * TSS Removal Efficiency)}}$$

Table A-2 Standard Dimensions for FDHC Models
(Revised January 2017)

FDHC Model and Manhole Diameter (ft)	Maximum Treatment Flow Rate (cfs)	50% Max Sediment Storage Volume (ft^3)	Chamber Depth (ft)	Treatment Chamber Depth [1] (ft)	Sediment Sump Depth (ft)	Aspect Ratio Treatment Depth: Diameter	Maximum Pipe Diameter (in)
3-ft	0.85	5.30	3.75	3.00	1.5	1.00	18
4-ft	1.50	9.42	5.00	4.25	1.5	1.06	24
5-ft	2.35	14.7	5.25	4.50	1.5	0.90	24
6-ft	3.38	21.2	6.25	5.50	1.5	0.92	32
7-ft	4.60	28.9	7.25	6.50	1.5	0.93	42
8-ft	6.00	37.7	8.00	7.25	1.5	0.91	48

[1] Treatment Chamber Depth is the chamber depth minus ½ the sediment sump depth. Larger models (>250% MTFR of the tested unit) must be geometrically proportionate to the tested unit (4' model). A variance of 15% is allowable. For units <250% MTFR (5 and 6-ft models) the depth must be equal or greater than the depth of the unit treated.