REVISIONS		
NO.	DATE	DESCRIPTION

OSRD SITE PLAN & DEFINITIVE SUBDIVISION PLAN for THAXTON HEIGHTS ROAD

THAXTON ROAD & GROVER STREET

MAP 95 LOT 8

Beverly, MA

MARCH 2019

APPLICANT: HICKORY STREET REALTY TRUST
JEFFREY KRUGMAN, TRUSTEE
900 CUMMINGS CENTER, SUITE 412S
BEVERLY, MA 01915

OWNER: SPRING HILL VENTURES, LLC
410 BOSTON POST ROAD, SUITE 28
SUDBURY, MA 01776

ENGINEER: GRIFFIN ENGINEERING GROUP, LLC
ROBERT H. GRIFFIN, PE
495 CABOT STREET, 2ND FLOOR
BEVERLY, MA 01915

SURVEYOR: LEBLANC SURVEY ASSOCIATES
VERNON LEBLANC, PLS
161 HOLTEN STREET
DANVERS, MA 01923

LANDSCAPE ARCHITECT: LAURA RUTLEDGE
38 WOODBURY STREET
BEVERLY, MA 01923

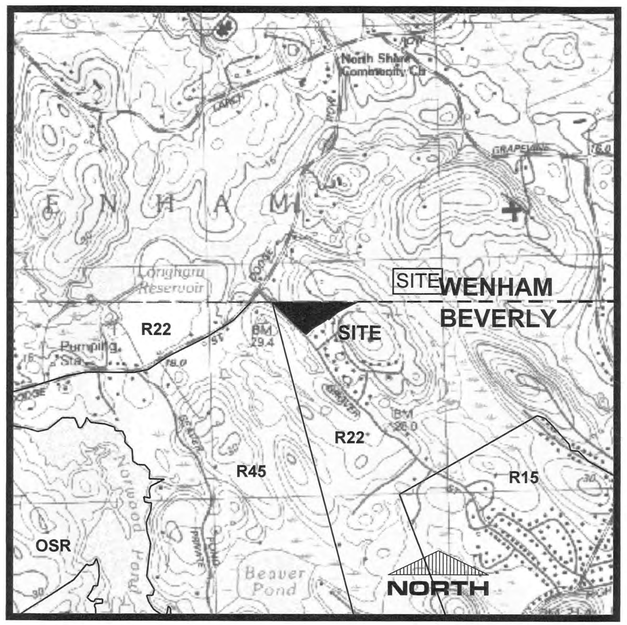

LOCUS PLAN SCALE: 1" = 1,000'

List of Drawings:

C-1: EXISTING CONDITIONS
C-2: PLAN OF LAND
C-3: OSRD SITE PLAN
C-4: UTILITIES PLAN
C-5: PROFILE & SECTION
C-6: DETAILS I
C-7: DETAILS II
C-8: DETAILS III

I, _____, CLERK OF THE CITY OF BEVERLY, MA, CERTIFY THAT THE NOTICE OF APPROVAL OF THIS PLAN BY THE BEVERLY PLANNING BOARD HAS BEEN RECEIVED AND RECORDED IN THIS OFFICE AND THAT NO APPEAL WAS RECEIVED DURING THE TWENTY (20) DAYS NEXT AFTER SUCH RECEIPT AND RECORDING OF SUCH NOTICE.

_____ BEVERLY CITY CLERK

_____ DATE

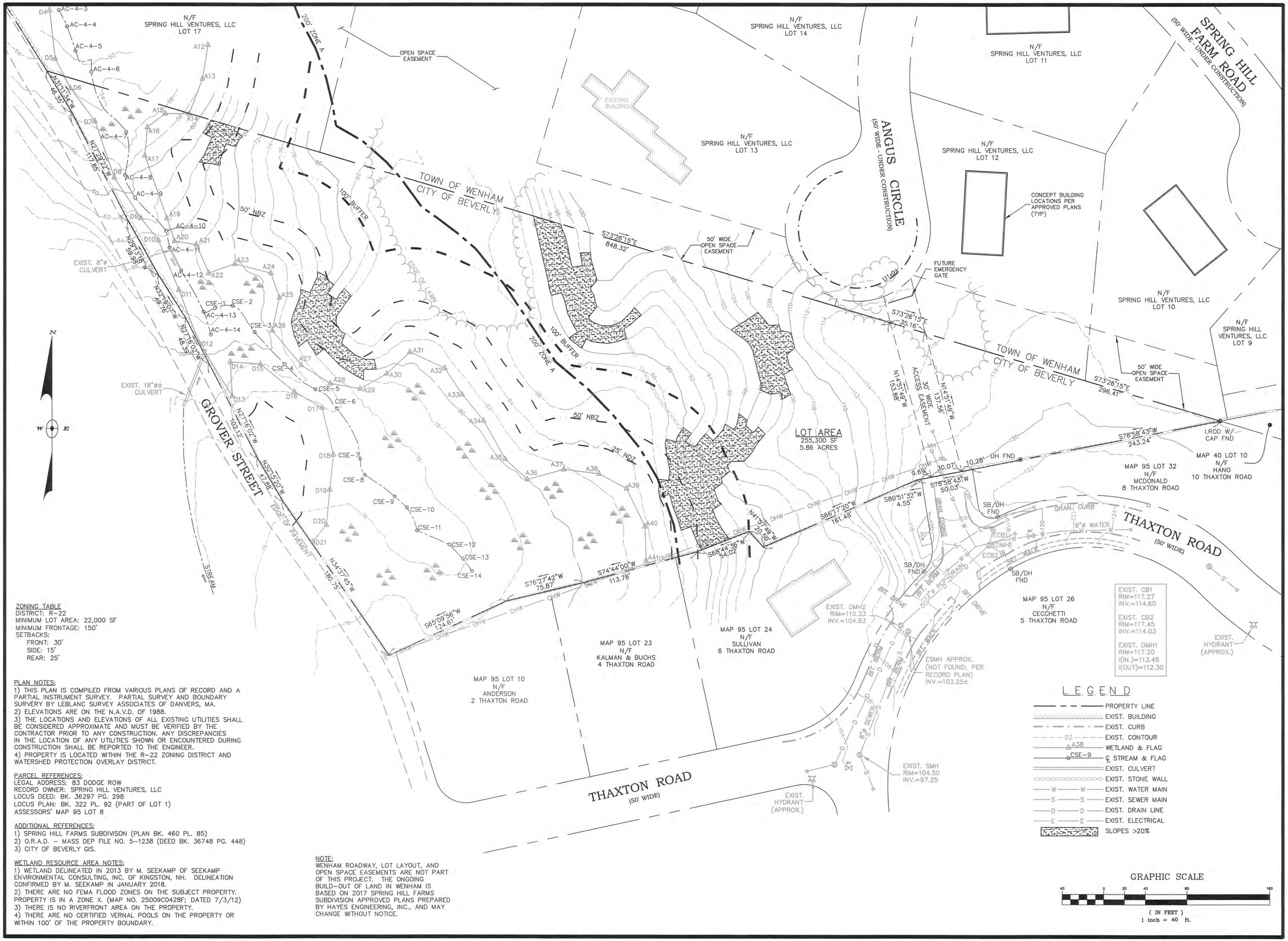

ZONING TABLE
DISTRICT: R-22
MINIMUM LOT AREA: 22,000 SF
MINIMUM FRONTAGE: 150'
SETBACKS:
FRONT: 30'
SIDE: 15'
REAR: 25'

PLAN NOTES:
1) THIS PLAN IS COMPILED FROM VARIOUS PLANS OF RECORD AND A PARTIAL INSTRUMENT SURVEY. PARTIAL SURVEY AND BOUNDARY SURVEY BY LEBLANC SURVEY ASSOCIATES OF DANVERS, MA.
2) ELEVATIONS ARE ON THE N.A.V.D. OF 1988.
3) THE LOCATIONS AND ELEVATIONS OF ALL EXISTING UTILITIES SHALL BE CONSIDERED APPROXIMATE AND MUST BE VERIFIED BY THE CONTRACTOR PRIOR TO ANY CONSTRUCTION. ANY DISCREPANCIES IN THE LOCATION OF ANY UTILITIES SHOWN OR ENCOUNTERED DURING CONSTRUCTION SHALL BE REPORTED TO THE ENGINEER.
4) PROPERTY IS LOCATED WITHIN THE R-22 ZONING DISTRICT AND WATERSHED PROTECTION OVERLAY DISTRICT.

PARCEL REFERENCES:
LEGAL ADDRESS: 83 DODGE ROW
RECORD OWNER: SPRING HILL VENTURES, LLC
LOCUS DEED: BK. 36297 PG. 298
LOCUS PLAN: BK. 322 PL. 92 (PART OF LOT 1)
ASSESSORS' MAP 95 LOT 8

ADDITIONAL REFERENCES:
1) SPRING HILL FARMS SUBDIVISON (PLAN BK. 460 PL. 85)
2) O.R.A.D. – MASS DEP FILE NO. 5-1238 (DEED BK. 36748 PG. 448)
3) CITY OF BEVERLY GIS.

WETLAND RESOURCE AREA NOTES:
1) WETLAND DELINEATED IN 2013 BY M. SEEKAMP OF SEEKAMP ENVIRONMENTAL CONSULTING, INC. OF KINGSTON, NH. DELINEATION CONFIRMED BY M. SEEKAMP IN JANUARY 2018.
2) THERE ARE NO FEMA FLOOD ZONES ON THE SUBJECT PROPERTY. PROPERTY IS IN A ZONE X. (MAP NO. 25009C0428F; DATED 7/3/12)
3) THERE IS NO RIVERFRONT AREA ON THE PROPERTY.
4) THERE ARE NO CERTIFIED VERNAL POOLS ON THE PROPERTY OR WITHIN 100' OF THE PROPERTY BOUNDARY.

NOTE:
WENHAM ROADWAY, LOT LAYOUT, AND OPEN SPACE EASEMENTS ARE NOT PART OF THIS PROJECT. THE ONGOING BUILD-OUT OF LAND IN WENHAM IS BASED ON 2017 SPRING HILL FARMS SUBDIVISION APPROVED PLANS PREPARED BY HAYES ENGINEERING, INC., AND MAY CHANGE WITHOUT NOTICE.

No.	Date	Description

Revisions

COMMONWEALTH OF MASSACHUSETTS
ROBERT H. GRIFFIN
CIVIL
#36686
PROFESSIONAL ENGINEER
3-6-19

Griffin Engineering Group, LLC
495 Cabot Street, 2nd Floor
Beverly, MA 01915
Tel: 978-927-5111
Fax: 978-927-5103

HICKORY STREET
REALTY TRUST
THAXTON ROAD
BEVERLY, MA

THAXTON HEIGHTS RD.

EXISTING
CONDITIONS

Scale: 1"=40'
Job No.: 1729
File Name: p/p/mc/th
Date: 3/6/19

C-1

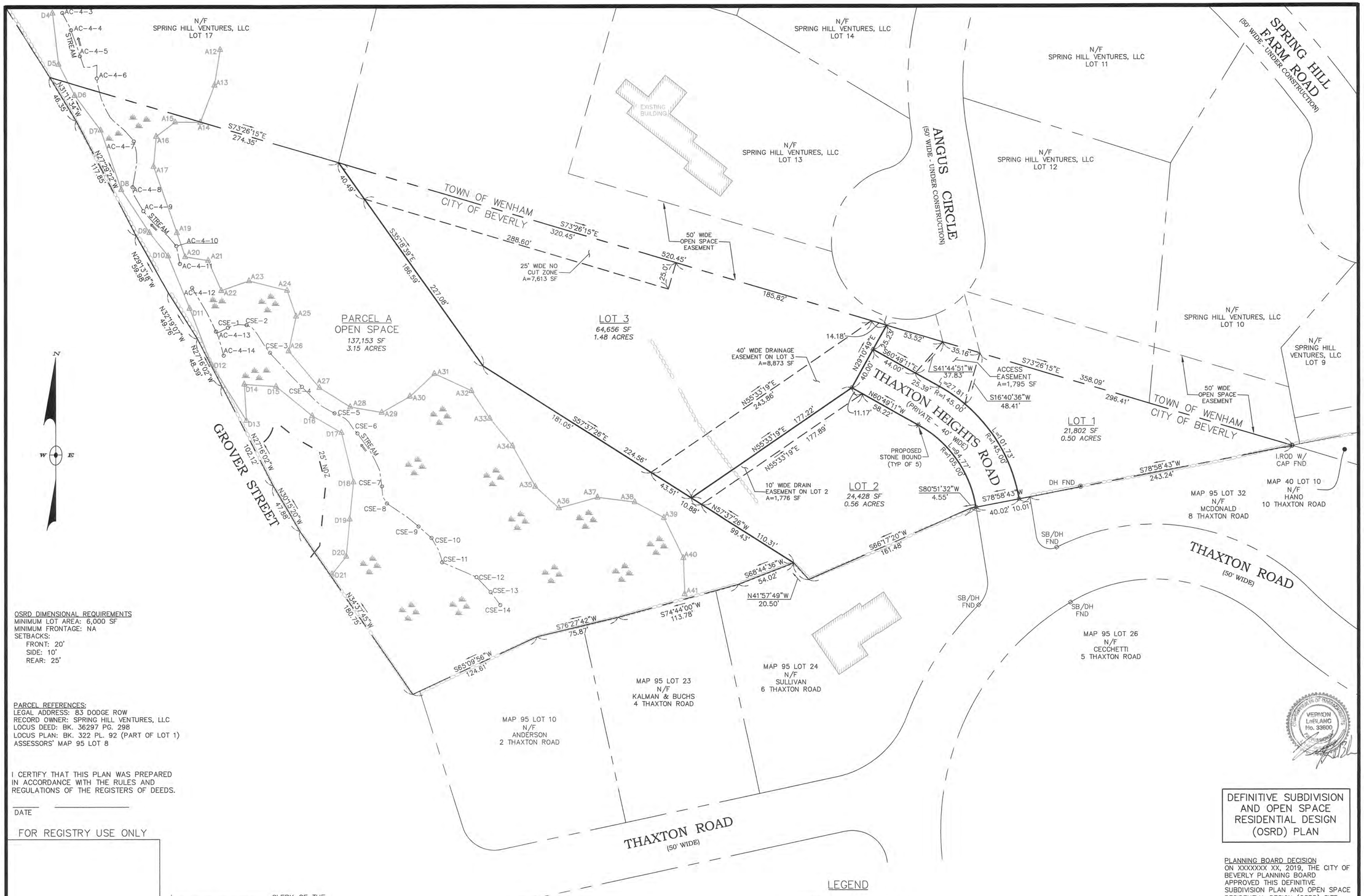

OSRD DIMENSIONAL REQUIREMENTS
MINIMUM LOT AREA: 6,000 SF
MINIMUM FRONTAGE: NA
SETBACKS:
FRONT: 20'
SIDE: 10'
REAR: 25'

PARCEL REFERENCES:
LEGAL ADDRESS: 83 DODGE ROW
RECORD OWNER: SPRING HILL VENTURES, LLC
LOCUS DEED: BK. 36297 PG. 298
LOCUS PLAN: BK. 322 PL. 92 (PART OF LOT 1)
ASSESSORS' MAP 95 LOT 8

I CERTIFY THAT THIS PLAN WAS PREPARED IN ACCORDANCE WITH THE RULES AND REGULATIONS OF THE REGISTERS OF DEEDS.

_____ DATE

FOR REGISTRY USE ONLY

I, _____, CLERK OF THE CITY OF BEVERLY, MA, CERTIFY THAT THE NOTICE OF APPROVAL OF THIS PLAN BY THE BEVERLY PLANNING BOARD HAS BEEN RECEIVED AND RECORDED IN THIS OFFICE AND THAT NO APPEAL WAS RECEIVED DURING THE TWENTY (20) DAYS NEXT AFTER SUCH RECEIPT AND RECORDING OF SUCH NOTICE.

_____ BEVERLY CITY CLERK _____ DATE

LEGEND

N72°32'14"E / 177.24' — EXIST. PROPERTY LINE

N23°43'25"W / 127.48' — PROP. PROPERTY LINE

PROP. STONE BOUND TO BE SET

DEFINITIVE SUBDIVISION AND OPEN SPACE RESIDENTIAL DESIGN (OSRD) PLAN

PLANNING BOARD DECISION
ON XXXXXXX XX, 2019, THE CITY OF BEVERLY PLANNING BOARD APPROVED THIS DEFINITIVE SUBDIVISION PLAN AND OPEN SPACE RESIDENTIAL DESIGN (OSRD) SITE PLAN #XX-XX.

GRAPHIC SCALE
40 0 20 40 80 160
(IN FEET)
1 inch = 40 ft.

CITY OF BEVERLY
PLANNING BOARD

DATE:

No.	Date	Description

Revisions

LEBLANC SURVEY ASSOCIATES
161 HOLTEN STREET
DANVERS, MA 01923
978-774-6012

Griffin Engineering Group, LLC
495 Cabot Street, 2nd Floor
Beverly, MA 01915
Tel: 978-927-5111
Fax: 978-927-5103

HICKORY STREET REALTY TRUST
THAXTON ROAD
BEVERLY, MA

THAXTON HEIGHTS RD.

PLAN OF LAND

Scale: 1"=40'
Job No.: 1729
File Name: p/p/mc/th
Date: 3/6/19

C-2

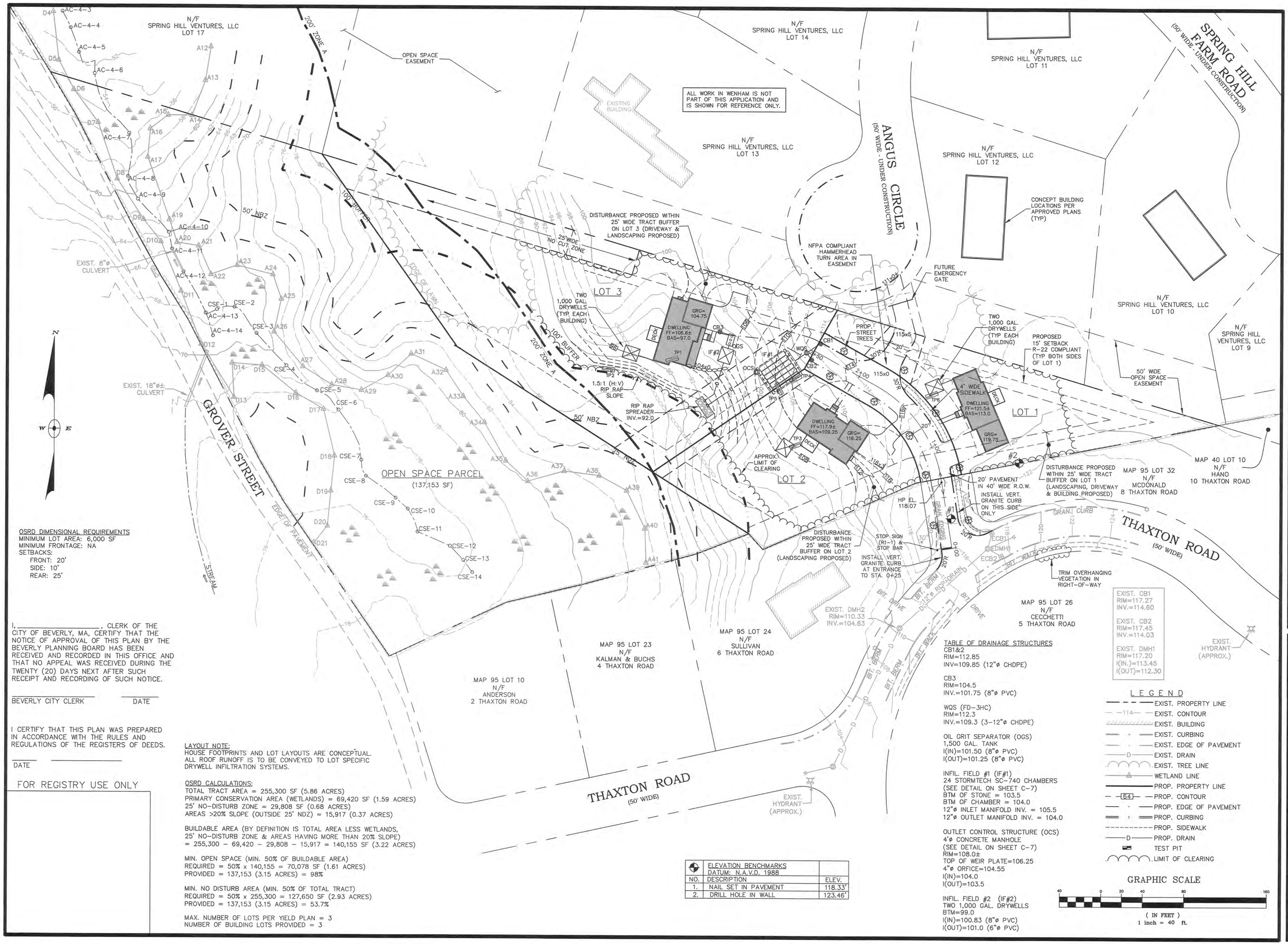

OSRD DIMENSIONAL REQUIREMENTS
MINIMUM LOT AREA: 6,000 SF
MINIMUM FRONTAGE: NA
SETBACKS:
FRONT: 20'
SIDE: 10'
REAR: 25'

I, _____, CLERK OF THE CITY OF BEVERLY, MA, CERTIFY THAT THE NOTICE OF APPROVAL OF THIS PLAN BY THE BEVERLY PLANNING BOARD HAS BEEN RECEIVED AND RECORDED IN THIS OFFICE AND THAT NO APPEAL WAS RECEIVED DURING THE TWENTY (20) DAYS NEXT AFTER SUCH RECEIPT AND RECORDING OF SUCH NOTICE.

_____ BEVERLY CITY CLERK _____ DATE

I CERTIFY THAT THIS PLAN WAS PREPARED IN ACCORDANCE WITH THE RULES AND REGULATIONS OF THE REGISTERS OF DEEDS.

_____ DATE _____

FOR REGISTRY USE ONLY

LAYOUT NOTE:
HOUSE FOOTPRINTS AND LOT LAYOUTS ARE CONCEPTUAL. ALL ROOF RUNOFF IS TO BE CONVEYED TO LOT SPECIFIC DRYWELL INFILTRATION SYSTEMS.

OSRD CALCULATIONS:
TOTAL TRACT AREA = 255,300 SF (5.86 ACRES)
PRIMARY CONSERVATION AREA (WETLANDS) = 69,420 SF (1.59 ACRES)
25' NO-DISTURB ZONE = 29,808 SF (0.68 ACRES)
AREAS >20% SLOPE (OUTSIDE 25' NDZ) = 15,917 (0.37 ACRES)

BUILDABLE AREA (BY DEFINITION IS TOTAL AREA LESS WETLANDS, 25' NO-DISTURB ZONE & AREAS HAVING MORE THAN 20% SLOPE)
= 255,300 – 69,420 – 29,808 – 15,917 = 140,155 SF (3.22 ACRES)

MIN. OPEN SPACE (MIN. 50% OF BUILDABLE AREA)
REQUIRED = 50% x 140,155 = 70,078 SF (1.61 ACRES)
PROVIDED = 137,153 (3.15 ACRES) = 98%

MIN. NO DISTURB AREA (MIN. 50% OF TOTAL TRACT)
REQUIRED = 50% x 255,300 = 127,650 SF (2.93 ACRES)
PROVIDED = 137,153 (3.15 ACRES) = 53.7%

MAX. NUMBER OF LOTS PER YIELD PLAN = 3
NUMBER OF BUILDING LOTS PROVIDED = 3

ELEVATION BENCHMARKS
DATUM: N.A.V.D. 1988

NO.	DESCRIPTION	ELEV.
1.	NAIL SET IN PAVEMENT	118.33'
2.	DRILL HOLE IN WALL	123.46'

TABLE OF DRAINAGE STRUCTURES

CB1&2
RIM=112.85
INV=109.85 (12"ø CHDPE)

CB3
RIM=104.5
INV.=101.75 (8"ø PVC)

WQS (FD-3HC)
RIM=112.3
INV.=109.3 (3-12"ø CHDPE)

OIL GRIT SEPARATOR (OGS)
1,500 GAL. TANK
I(IN)=101.50 (8"ø PVC)
I(OUT)=101.25 (8"ø PVC)

INFIL. FIELD #1 (IF#1)
24 STORMTECH SC-740 CHAMBERS
(SEE DETAIL ON SHEET C-7)
BTM OF STONE = 103.5
BTM OF CHAMBER = 104.0
12"ø INLET MANIFOLD INV. = 105.5
12"ø OUTLET MANIFOLD INV. = 104.0

OUTLET CONTROL STRUCTURE (OCS)
4'ø CONCRETE MANHOLE
(SEE DETAIL ON SHEET C-7)
RIM=108.0±
TOP OF WEIR PLATE=106.25
4"ø ORFICE=104.55
I(IN)=104.0
I(OUT)=103.5

INFIL. FIELD #2 (IF#2)
TWO 1,000 GAL. DRYWELLS
BTM=99.0
I(IN)=100.83 (8"ø PVC)
I(OUT)=101.0 (6"ø PVC)

LEGEND

- EXIST. PROPERTY LINE
- 114 EXIST. CONTOUR
- EXIST. BUILDING
- EXIST. CURBING
- EXIST. EDGE OF PAVEMENT
- D EXIST. DRAIN
- EXIST. TREE LINE
- WETLAND LINE
- PROP. PROPERTY LINE
- 64 PROP. CONTOUR
- PROP. EDGE OF PAVEMENT
- PROP. CURBING
- PROP. SIDEWALK
- D PROP. DRAIN
- TEST PIT
- LIMIT OF CLEARING

GRAPHIC SCALE
40 0 20 40 80 160
(IN FEET)
1 inch = 40 ft.

CITY OF BEVERLY
PLANNING BOARD

DATE:

No.	Date	Description

Revisions

COMMONWEALTH OF MASSACHUSETTS
ROBERT H. GRIFFIN
CIVIL
#36686
PROFESSIONAL ENGINEER

3-6-19

Griffin Engineering Group, LLC
495 Cabot Street, 2nd Floor
Beverly, MA 01915
Tel: 978-927-5111
Fax: 978-927-5103

HICKORY STREET
REALTY TRUST
THAXTON ROAD
BEVERLY, MA

THAXTON HEIGHTS RD.

OSRD SITE PLAN

Scale: 1"=40'
Job No.: 1729
File Name: p/p/mc/th
Date: 3/6/19

C-3

N/F
SPRING HILL VENTURES, LLC
LOT 17

N/F
SPRING HILL VENTURES, LLC
LOT 14

N/F
SPRING HILL VENTURES, LLC
LOT 11

N/F
SPRING HILL VENTURES, LLC
LOT 13

N/F
SPRING HILL VENTURES, LLC
LOT 12

N/F
SPRING HILL VENTURES, LLC
LOT 10

N/F
SPRING HILL VENTURES, LLC
LOT 9

SPRING HILL FARM ROAD
(50' WIDE - UNDER CONSTRUCTION)

ANGUS CIRCLE
(50' WIDE - UNDER CONSTRUCTION)

OPEN SPACE EASEMENT

ALL WORK IN WENHAM IS NOT PART OF THIS APPLICATION AND IS SHOWN FOR REFERENCE ONLY.

EXISTING BUILDING

200' ZONE A

100' BUFFER

50' NBZ

EDGE OF LAWN

EXIST. 8"ø CULVERT

EXIST. 18"ø± CULVERT

GROVER STREET

EDGE OF PAVEMENT

STREAM

OPEN SPACE PARCEL
(137,153 SF)

LOT 3

LOT 2

LOT 1

E-ONE SEWER PUMP STATION (TYP EACH RESIDENCE)

1¼"ø SCH40 PVC FORCE MAIN SEWER SERVICE (4' COVER; TYP EA. RESIDENCE)

CONCEPT BUILDING LOCATIONS PER APPROVED PLANS (TYP)

FUTURE EMERGENCY GATE

UNDERGROUND ELEC., TELE., & CABLE PER UTILITY SUPPLIER

1¼"x2"ø REDUCER COUPLING

50' WIDE OPEN SPACE EASEMENT

SLEEVE FORCE MAIN AT CROSSINGS (TYP)

HYDRANT

1"ø COPPER WATER SERVICE MIN. 5' COVER (TYP EACH BUILDING)

2"ø SCH40 PVC FORCE MAIN

ABADON EXIST. WATER SERVICE AT MAIN

8"ø C.L.D.I. (CLASS 52) WATER MAIN

TRIPLE GATE VALVE

SLEEVE FORCE MAIN AT WATER MAIN CROSSING

CORE DRILL PIPE INLET. RAISE RIM TO FINISH GRADE & REBUILD INVERT IF REQ'D

ESMH APPROX. (NOT FOUND; PER RECORD PLAN) INV.=103.25±

ALL WORK IN THAXTON ROAD TO MEET CITY OF BEVERLY REQUIREMENTS

EXIST. DMH2
RIM=110.33
INV.=104.83

EXIST. CB1
RIM=117.27
INV.=114.60

EXIST. CB2
RIM=117.45
INV.=114.03

EXIST. DMH1
RIM=117.20
I(IN.)=113.45
I(OUT)=112.30

EXIST. SMH
RIM=104.50
INV.=97.25

EXIST. HYDRANT (APPROX.)

THAXTON ROAD
(50' WIDE)

GRAN. CURB

8"ø WATER

BIT. DRIVE

BIT. BERM

BIT. WALK

12"ø RCP DRAIN

8"ø SEWER

MAP 95 LOT 10
N/F
ANDERSON
2 THAXTON ROAD

MAP 95 LOT 23
N/F
KALMAN & BUCHS
4 THAXTON ROAD

MAP 95 LOT 24
N/F
SULLIVAN
6 THAXTON ROAD

MAP 95 LOT 26
N/F
CECCHETTI
5 THAXTON ROAD

MAP 95 LOT 32
N/F
MCDONALD
8 THAXTON ROAD

MAP 40 LOT 10
N/F
HANO
10 THAXTON ROAD

N

W E

GRAPHIC SCALE

40 0 20 40 80 160

(IN FEET)
1 inch = 40 ft.

LEGEND

- EXIST. PROPERTY LINE
- EXIST. BUILDING
- EXIST. CURBING
- EXIST. EDGE OF PAVEMENT
- EXIST. DRAIN
- EXIST. WATER
- EXIST. SEWER
- EXIST. GAS
- EXIST. TREE
- WETLAND LINE
- PROP. PROPERTY LINE
- PROP. EDGE OF PAVEMENT
- PROP. GRANITE CURB
- PROP. WATER
- PROP. SEWER
- PROP. FORE MAIN
- PROP. ELECTRICAL
- PROP. DRAIN

No.	Date	Description

Revisions

COMMONWEALTH OF MASSACHUSETTS
ROBERT H. GRIFFIN
CIVIL
#36686
PROFESSIONAL ENGINEER

3-6-19

Griffin Engineering Group, LLC

495 Cabot Street, 2nd Floor
Beverly, MA 01915

Tel: 978-927-5111
Fax: 978-927-5103

HICKORY STREET
REALTY TRUST
THAXTON ROAD
BEVERLY, MA

THAXTON HEIGHTS RD.

UTILITIES PLAN

Scale: 1"=40'

Job No.: 1729

File Name: p/p/mc/th

Date: 3/6/19

C-4

GENERAL NOTES

1. THE LOCATIONS AND ELEVATIONS OF ALL EXISTING UTILITIES SHALL BE CONSIDERED APPROXIMATE AND MUST BE VERIFIED BY THE CONTRACTOR PRIOR TO ANY CONSTRUCTION. ANY DISCREPANCIES IN THE LOCATION OF ANY UTILITIES SHOWN OR ENCOUNTERED DURING CONSTRUCTION SHALL BE REPORTED TO THE ENGINEER.

2. THE CONTRACTOR SHALL CALL DIG-SAFE 72 HOURS PRIOR TO CONSTRUCTION TO INFORM UTILITY COMPANIES OF ANY EXCAVATION ADJACENT TO EXISTING UTILITIES.

3. THE CONTRACTOR SHALL NOTIFY THE OWNER, UTILITY COMPANIES, POLICE, FIRE AND DPW PRIOR TO ANY BLASTING.

4. WHENEVER EXISTING STRUCTURES ARE ENCOUNTERED, THE CONTRACTOR SHALL REPAIR ANY DAMAGED STRUCTURES OR REPLACE ANY REMOVED STRUCTURES, AND MAKE ANY IMPROVEMENTS ABOVE OR BELOW GRADE TO A CONDITION BETTER THAN OR EQUAL TO EXISTING CONDITIONS.

5. THE CONTRACTOR SHALL BE RESPONSIBLE FOR DISPOSAL OF ALL WASTE MATERIAL AT AN APPROVED SITE. BURIAL OF WASTE MATERIAL ON-SITE IS NOT PERMITTED.

6. THE CONTRACTOR SHALL PROTECT ADJACENT PROPERTIES FROM ON-SITE CONSTRUCTION ACTIVITIES AND REMOVE ANY SEDIMENT OR DEBRIS DEPOSITED THEREON IMMEDIATELY.

7. DRAINAGE GENERATED AS A RESULT OF DEWATERING SHALL BE DISCHARGED TO EXISTING DRAINAGE COURSES WITH PROPER FILTRATION AND EROSION CONTROL MEASURES. DISCHARGE ONTO PAVEMENT OR PRIVATE PROPERTY SHALL NOT BE ALLOWED.

8. IF ANY PART OF THIS DESIGN IS TO BE ALTERED IN ANY WAY, THE ENGINEER AS WELL AS THE APPROVING AUTHORITIES SHALL BE NOTIFIED IN WRITING BEFORE CONSTRUCTION.

9. ONLY THOSE PLANS APPROVED BY THE CITY OF BEVERLY ARE TO BE USED FOR CONSTRUCTION.

10. GRANULAR FILL SHALL BE NON-PLASTIC, WITH LESS THAN 10% PASSING #200 SIEVE.

11. UNLESS OTHERWISE NOTED, COMPACT ALL LAYERS TO 95% MODIFIED PROCTOR.

12. ALL WATER, SEWER, AND DRAINAGE WORK SHALL COMPLY WITH THE CITY OF BEVERLY REQUIREMENTS. ALL WORK WITHIN 10' OF THE PROPOSED RESIDENCE TO CONFORM TO MASSACHUSETTS BUILDING CODE, AND ANY LOCAL BOARD OF HEALTH SUPPLEMENTARY REGULATIONS.

13. THE CONTRACTOR SHALL BE RESPONSIBLE FOR HORIZONTAL AND VERTICAL CONTROL OF ALL SYSTEM COMPONENTS.

14. SAFETY MEASURES, DAY-TO-DAY CONTROL OF WORK AND CONSTRUCTION METHODS SHALL BE THE SOLE RESPONSIBILITY OF THE CONTRACTOR.

15. PLACE 4" LOAM AND SUNNY LAWN SEED MIXTURE (200 LB/ACRE), STARTER FERTILIZER, LIME AS REQUIRED OVER ALL DISTURBED AREAS. PROVIDE EROSION CONTROL SEED MIX AND BLANKETS ON 2:1 (H:V) INFILTRATION BASIN EMBANKMENTS SLOPES. SEED MIX TO BE NEW ENGLAND EROSION CONTROL/RESTORATION FOR DETENTION BASINS AND MOIST SITES BY NEW ENGLAND WETLANDS PLANT, INC. OR APPROVED EQUAL.

16. IN CASES WHERE LEDGE OR BOULDERS ARE PRESENT, THE ENGINEER WILL NOT BE RESPONSIBLE FOR ASSURING THE AMOUNT OF ROCK TO BE ENCOUNTERED.

17. CONTRACTOR TO PROVIDE INDIVIDUAL WATER, SEWER, GAS, ELECTRICAL, TELEPHONE, AND CABLE BUILDING SERVICES TO LOT LINE DURING THE CONSTRUCTION OF THE ROADWAY.

18. PROPOSED RESIDENCE FOOTPRINT, ON-LOT UTILITIES AND GRADING ARE SHOWN FOR CONCEPTUAL PURPOSES ONLY.

19. SHOULD THE RODENT POPULATION BE DISPLACED (LEAVE ITS NATURAL HABITAT) BECAUSE OF LAND DEVELOPMENT, THEN THE DEVELOPER MUST BEAR THE RESPONSIBILITY OF RETAINING THE SERVICES OF A PROFESSIONAL EXTERMINATING COMPANY TO ABATE THE RODENT MIGRATION PROBLEM. THIS SERVICE MUST ADEQUATELY SOLVE THE PROBLEM AND MUST BE COMPLETED AT THE EXPENSE OF THE DEVELOPER.

LIST OF WAIVERS

SUBDIVISION RULES & REGULATIONS:
- §375-13.B.(4): MAPPING TREES >6" DBH
- §375-14.B.(2): MINIMUM CENTERLINE RADIUS
- §375-14.C: RIGHT-OF-WAY & PAVEMENT WIDTH
- §375-14.D.(3): LEVELING AREA
- §375-14.E.(2): TURN-AROUND
- §375-27.B: SIDEWALKS
- §375-28.A: CURBS AND BERMS
- §375-33: STREET LIGHTS
- §375-34: FIRE ALARM PULL BOX

OSRD SITE PLAN ORDINANCE:
- §300.54.F(3)(b)[2]: 25' TRACT BUFFER
- §300.54.F(3)(b)[8]: MAPPING TREES >10" DBH
- §300.54.G(5): MINIMUM ROADWAY WIDTH

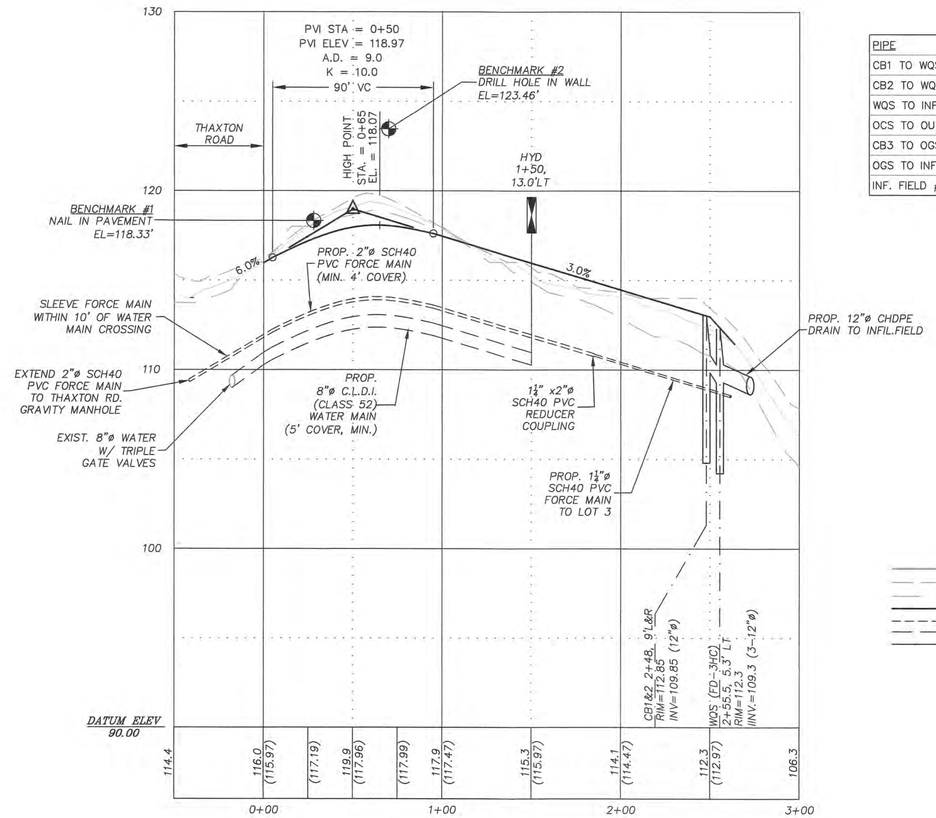

ROADWAY PROFILE

VERTICAL SCALE : 1"=4'

HORIZONTAL SCALE : 1"=40"

DRAIN PIPE SCHEDULE

PIPE	LENGTH	PIPE	SLOPE
CB1 TO WQS	12.0'	12"ø CHDPE	6.6%
CB2 TO WQS	4.5'	12"ø CHDPE	12.2%
WQS TO INF. FIELD #1	12'±	12"ø CHDPE	32%
OCS TO OUTFALL	54'±	12"ø CHDPE	23%
CB3 TO OGS	8'	8"ø PVC	3.1%
OGS TO INF. FIELD #2	4'	8"ø PVC	6.3%
INF. FIELD #2 TO OUTFALL	40'	6"ø PVC	22.5%

LEGEND

- EXISTING CENTERLINE GRADE
- EXISTING GRADE 12' RIGHT
- EXISTING GRADE 12' LEFT
- PROPOSED CENTERLINE GRADE
- SEWER LINE
- WATER LINE
- DRAINAGE LINE

KEY:
1. 1½" CLASS 1 BIT. CONCRETE TOP COURSE TYPE I-1 (M3.11.0 -TABLE A).
2. 3" CLASS 1 BIT. CONCRETE BINDER COURSE (M3.11.0 - TABLE A).
3. 12" DENSE GRADED CRUSHED STONE FOR SUB-BASE (M2.01.7)
4. PREPARED SUBGRADE.

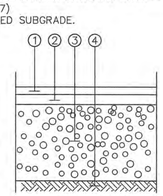

FULL DEPTH PAVEMENT

N.T.S.

NOTES:
1. REMOVE ALL LOAM, ROOTS, SUBSOIL AND DELETERIOUS MATERIALS.
2. COMPACT ALL LAYERS, AND SUBGRADE, TO 95% MOD. PROCTOR.
3. MATERIAL REFERENCES ARE TO 1995 EDITION OF MASS. HIGHWAY STANDARD SPECIFICATIONS FOR HIGHWAYS AND BRIDGES.
4. 4" LOAM, SEED AND MULCH ALL DISTURBED AREAS.
   LOAM = M 1.05.0
   SEED = M 6.03.0 SLOPE MIX
   MULCH = M 6.04.0 ANY TYPE
5. IN LEDGE, REMOVE LEDGE TO MIN. DEPTH OF 24" BELOW FINISH GRADE; BACKFILL WITH COMPACTED GRAVEL.

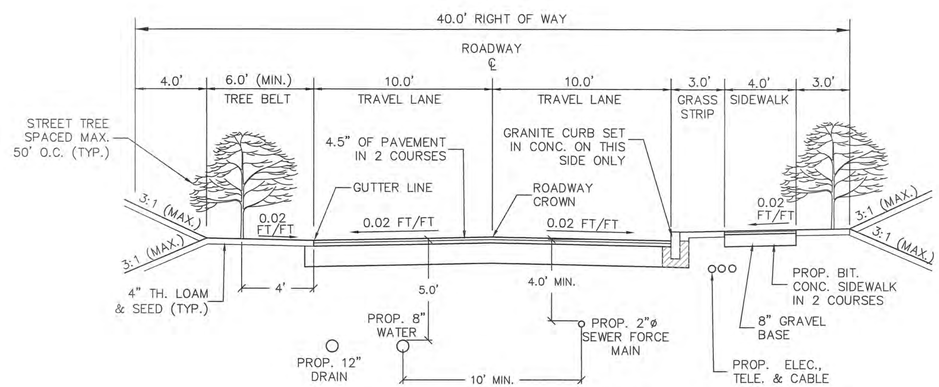

TYPICAL ROADWAY SECTION

SCALE: 1"=4'

(LOOKING UPSTATION)

ROADWAY SECTION NOTES:
1. REMOVE ALL LOAM, ROOTS, SUBSOIL AND DELETERIOUS MATERIALS.
2. COMPACT ALL LAYERS, AND SUBGRADE, TO 95% MOD. PROCTOR.
3. MATERIAL REFERENCES ARE TO 1995 EDITION OF MASS. HIGHWAY STANDARD SPECIFICATIONS FOR HIGHWAYS AND BRIDGES.
4. 4" LOAM, SEED AND MULCH ALL DISTURBED AREAS.
   LOAM = M 1.05.0
   SEED = M 6.03.0 SLOPE MIX
   MULCH = M 6.04.0 ANY TYPE
5. IN LEDGE, REMOVE LEDGE TO MIN. DEPTH OF 24" BELOW FINISH GRADE; BACKFILL WITH COMPACTED GRAVEL.

GRAPHIC SCALE

40 0 20 40 80 160

(IN FEET)
1 inch = 40 ft.

No.	Date	Description

Revisions

ROBERT H. GRIFFIN CIVIL #36886 COMMONWEALTH OF MASSACHUSETTS PROFESSIONAL ENGINEER

3-6-19

Griffin Engineering Group, LLC

495 Cabot Street, 2nd Floor
Beverly, MA 01915

Tel: 978-927-5111
Fax: 978-927-5103

HICKORY STREET
REALTY TRUST
THAXTON ROAD
BEVERLY, MA

THAXTON HEIGHTS RD.

PROFILE & SECTION

Scale: 1"=40'
Job No.: 1729
File Name: p/p/mc/th
Date: 3/6/19

C-5

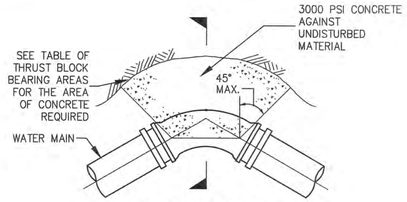

PLAN OF THRUST BLOCK AT BEND

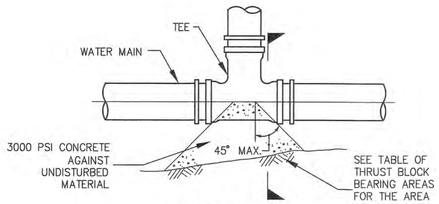

PLAN OF THRUST BLOCK AT TEE

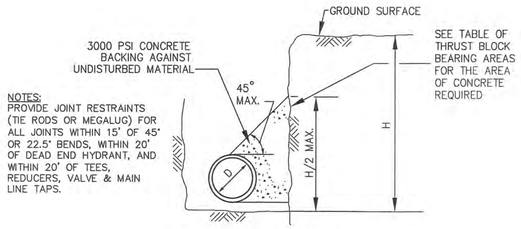

NOTES:
PROVIDE JOINT RESTRAINTS (TIE RODS OR MEGALUG) FOR ALL JOINTS WITHIN 15' OF 45° OR 22.5° BENDS, WITHIN 20' OF DEAD END HYDRANT, AND WITHIN 20' OF TEES, REDUCERS, VALVE & MAIN LINE TAPS.

THRUST BLOCK SECTION

CONCRETE THRUST BLOCK

N.T.S.

TABLE OF MINIMUM BEARING AREAS IN SQ. FT. AGAINST UNDISTURBED MATERIAL								
PIPE SIZE	BEND	PRESSURE 150 PSI						
		TYPE OF SOIL CONDITION						
		A	B	C	D	E	F	G
6" and smaller	TEES & PLUGS	8.5	4.5	3	2.5	1.5	1.5	1
	90	12	6	4	3	2	1.5	1.5
	45	6.5	3.5	2.5	2	1.5	1	1
	22 1/2	3.5	2	1.5	1	1	0.5	0.5
8"	TEES & PLUGS	15.5	8	5.5	4	3	2	1.5
	90	21.5	11	7.5	5.5	4	3	2.5
	45	12	6	4	3	2	1.5	1.5
	22 1/2	6	3	2	1.5	1	1	1

TYPE OF SOIL CONDITION

- A – SOFT CLAY; FINE LOOSE SAND
- B – SAND & CLAY; MIXED OR IN LAYERS; FINE CONFINED SAND
- C – HARD DRY CLAY
- D – COARSE SAND
- E – GRAVEL
- F – SOFT ROCK
- G – HARD PAN

NOTES:

1. FOR FITTINGS WITH LESS THAN 22 1/2° DEFLECTION USE BEARING AREAS FOR 22 1/2° BEND.
2. JOINTS SHALL NOT BE ENCASED IN CONCRETE. BEARING AREAS MAY BE DISREGARDED FOR TRENCHES IN ROCK WHERE THE TOP OF THE ROCK FACE IS AT OR ABOVE THE CROWN OF THE PIPE. HOWEVER, CONCRETE BACKING SHALL BE PLACED BETWEEN THE PIPE AND ROCK FACE.

CONCRETE THRUST BLOCK BEARING AREA

N.T.S.

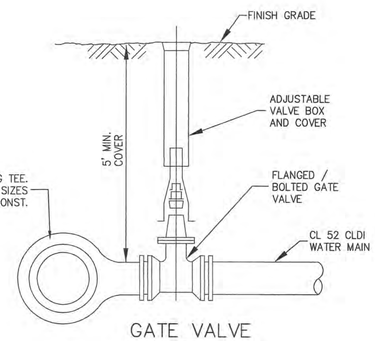

GATE VALVE

N.T.S.

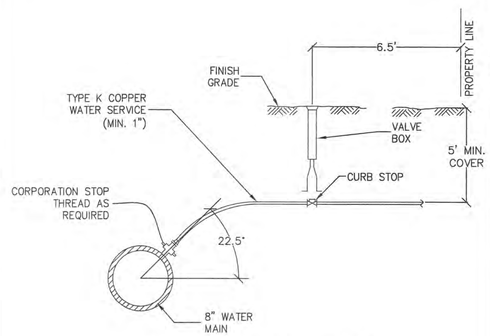

WATER SERVICE CONNECTION

N.T.S.

NOTES:
ALL CONNECTIONS PER CITY OF BEVERLY REQUIREMENTS.

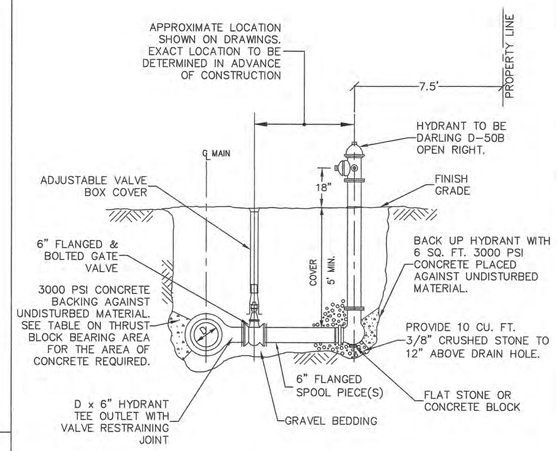

TYPICAL HYDRANT ASSEMBLY

N.T.S.

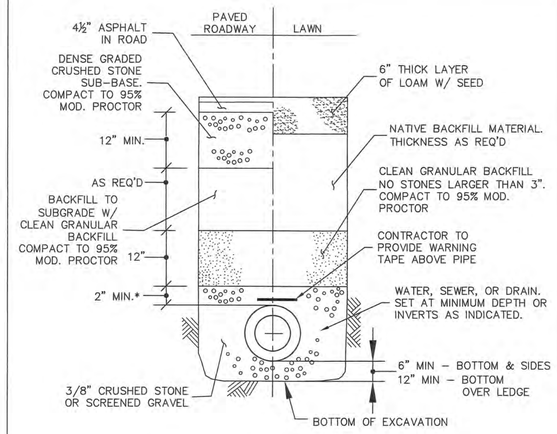

* FOR DUCTILE IRON OR RCP PIPE: TOP OF STONE IS MID-DEPTH (SPRING LINE) OF CONDUIT.

TYPICAL PIPE BEDDING SECTION

N.T.S.

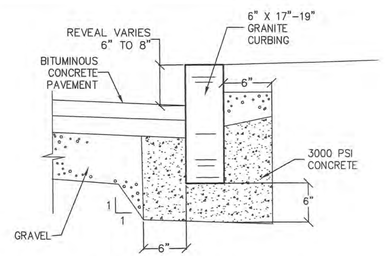

TYPICAL SECTION GRANITE CURBING

N.T.S.

NOTES:
1. ALL WORK TO MEET REQUIREMENTS OF CITY OF BEVERLY.

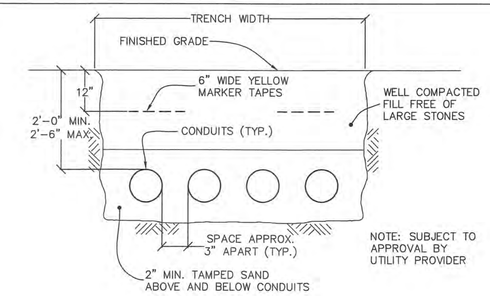

UNDERGROUND CONDUIT TRENCH FOR MULTIPLE CONDUITS

N.T.S.

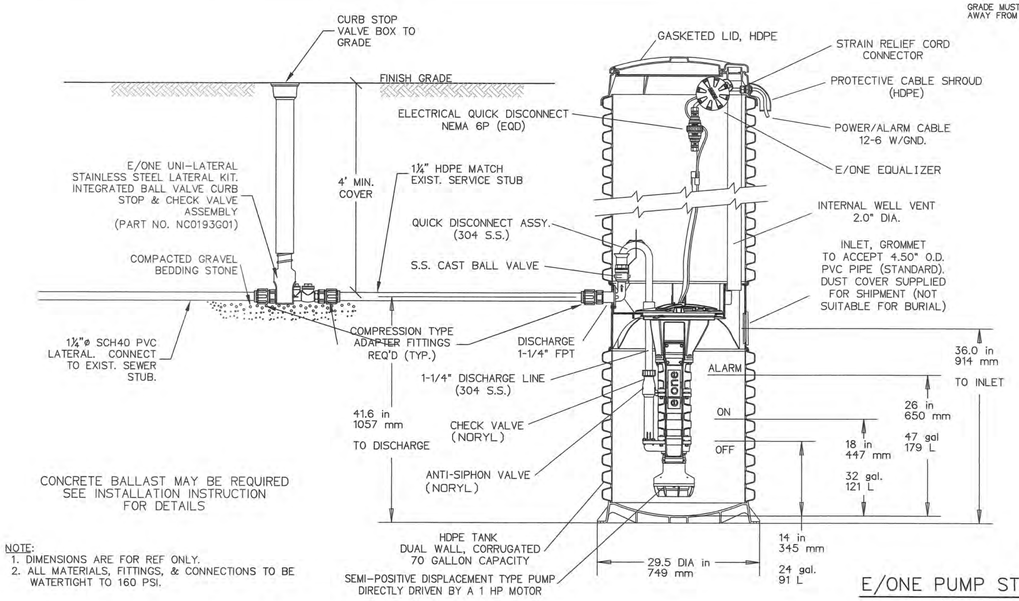

NOTE:
1. DIMENSIONS ARE FOR REF ONLY.
2. ALL MATERIALS, FITTINGS, & CONNECTIONS TO BE WATERTIGHT TO 160 PSI.

E/ONE PUMP STATION

N.T.S.

No.	Date	Description

Revisions

Griffin Engineering Group, LLC
495 Cabot Street, 2nd Floor
Beverly, MA 01915
Tel: 978-927-5111
Fax: 978-927-5103

HICKORY STREET REALTY TRUST
THAXTON ROAD
BEVERLY, MA

THAXTON HEIGHTS RD.

DETAILS I

Scale: 1"=40'
Job No.: 1729
File Name: p/p/mc/th
Date: 3/6/19

C-6

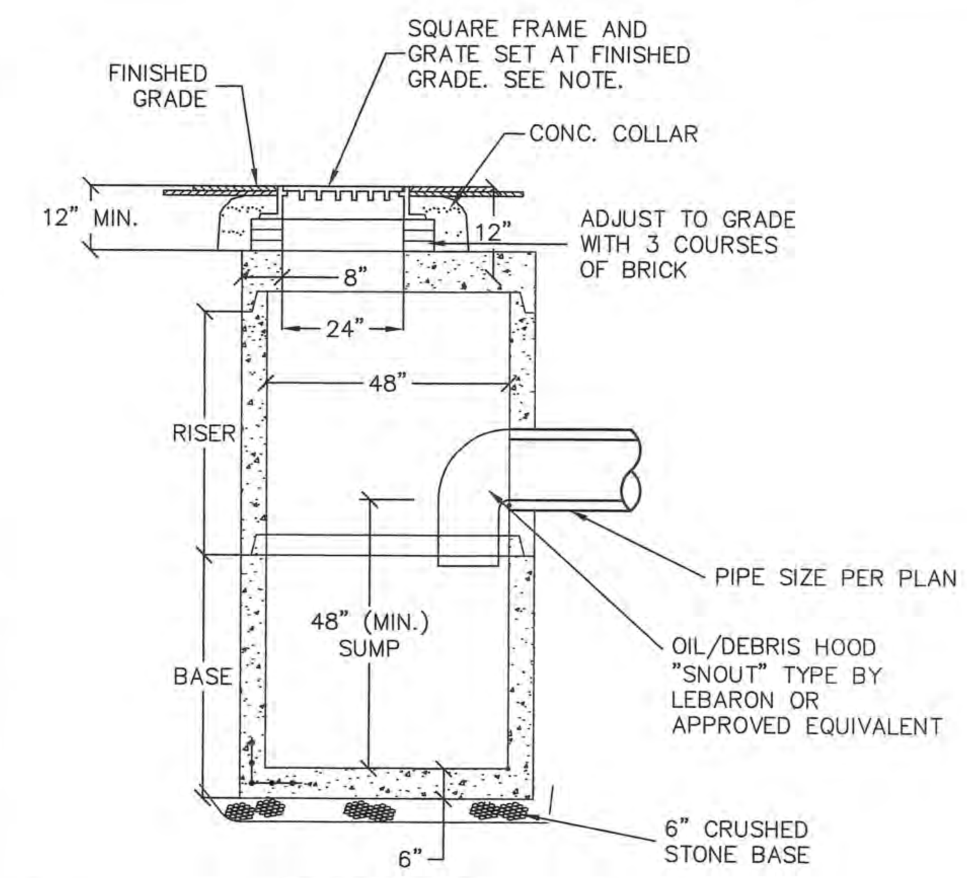

SECTION VIEW

NOTES:
1. CONCRETE 4,000 PSI MINIMUM AFTER 28 DAYS.
2. REINFORCED STEEL SHALL CONFORM TO LATEST ASTM A185 SPEC. 0.12 SQ. IN./LINEAL FT. AND 0.12 SQ. IN. (BOTH WAYS) BASE BOTTOM.
3. H-20 DESIGN LOADING.
4. LEBARON LF-248-2 THREE FLANGE OR APPROVED EQUIVALENT.
5. SHEA PRECAST OR APPROVED EQUIVALENT.
7. TONGUE & GROOVE JOINTS SEALED WITH BUTYL RESIN. BUTYL RESIN.
8. GRANITE CURB INLET REQ'D ALONG BACK OF BASIN GRATE.

4'ø PRECAST CATCH BASIN

N.T.S.

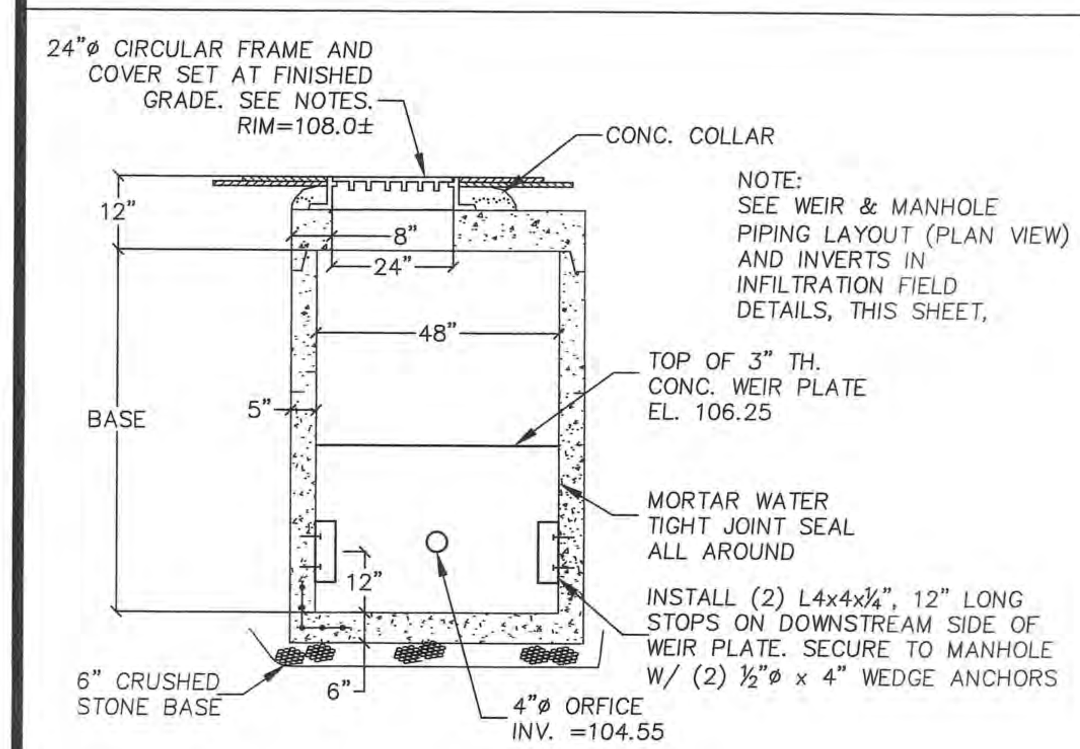

SECTION VIEW

NOTES:
1. CONCRETE 4,000 PSI MINIMUM AFTER 28 DAYS.
2. REINFORCED STEEL SHALL CONFORM TO LATEST ASTM A185 SPEC. 0.12 SQ. IN./LINEAL FT. AND 0.12 SQ. IN. (BOTH WAYS) BASE BOTTOM.
3. H-20 DESIGN LOADING.
4. SOLID COVER (MARKED DRAIN) OR APPROVED EQUIVALENT.
5. SHEA PRECAST OR APPROVED EQUIVALENT.
6. TONGUE & GROOVE JOINTS SEALED WITH BUTYL RESIN. BUTYL RESIN.

OUTLET CONTROL STRUCTURE (OCS)

N.T.S.

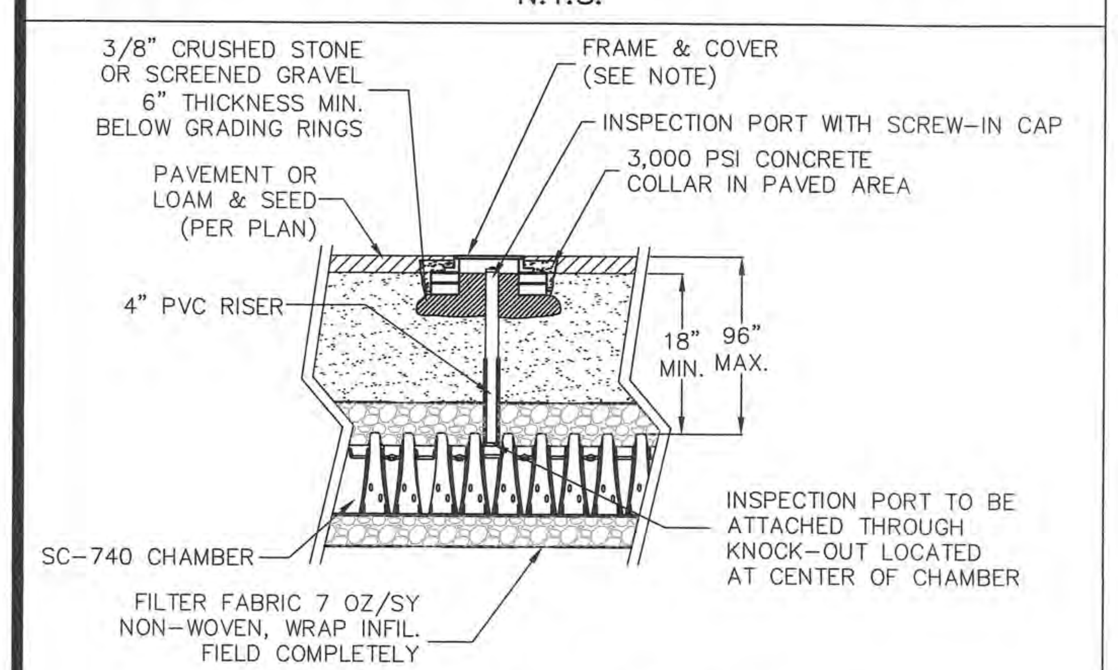

INSPECTION PORT DETAIL

N.T.S.

FRAME & COVER NOTE
IN LAWN AREA, PROVIDE 8"ø LANDSCAPE IRRIGATION BOX AT GRADE ON COMPACTED GRAVEL BED. IN PAVED AREA PROVIDE 8"ø CAST IRON FRAME & COVER (H20 RATED). SET ON 2 GRADING RINGS & MORTAR BED OR 2 COURSES BRICK AND MORTAR. PLACE CONCRETE COLLAR AROUND STRUCTURE.

*DOUBLE 1,000 GAL. DRYWELL BED DIMENSIONS TO BE 12.5'x14.5'. SPACE UNITS 1' APART AND PIPE TOGETHER WITH 6"ø PVC PIPE

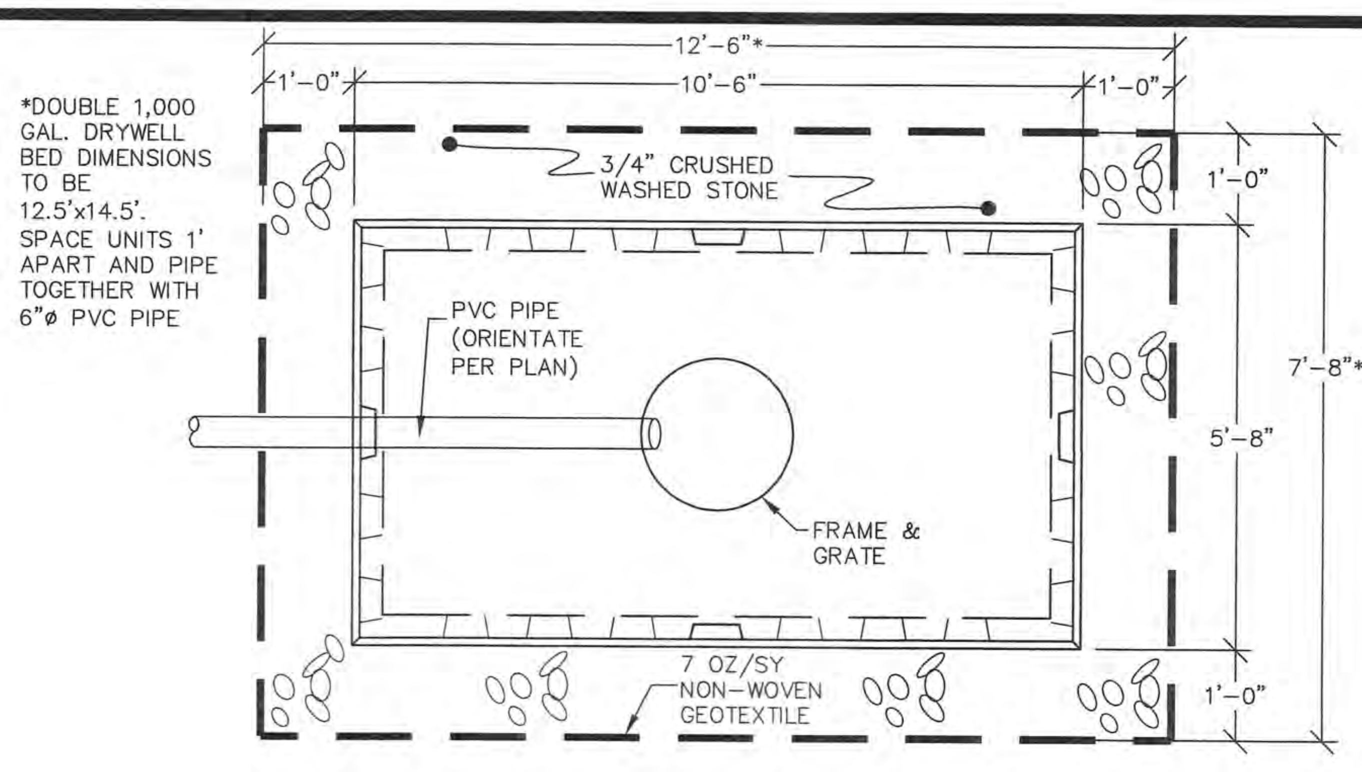

PLAN VIEW

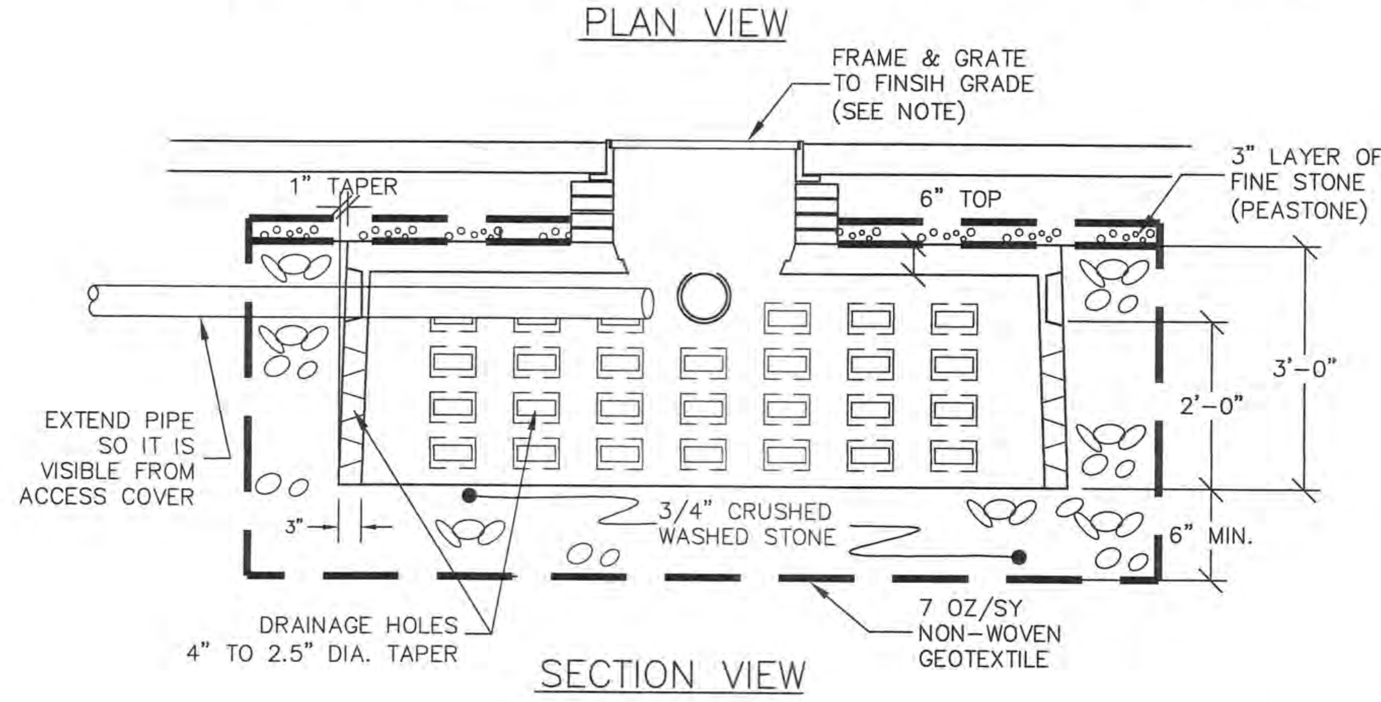

SECTION VIEW

SHALLOW DRYWELL/INFILTRATION CHAMBER DETAIL

N.T.S

NOTES:
1) 1,000 GALLON DRYWELL SHALLOW: SHEA DW-JDWH OR APPROVED ALTERNATE.
2) DRYWELLS TO BE H-20 RATED.
3) PROVIDE SOLID COVERS TO GRADE ON INFILTRATION FIELDS #2 (EACH UNIT). RELIEF GRATES REQUIRED ON ROOF DRYWELLS ONLY.

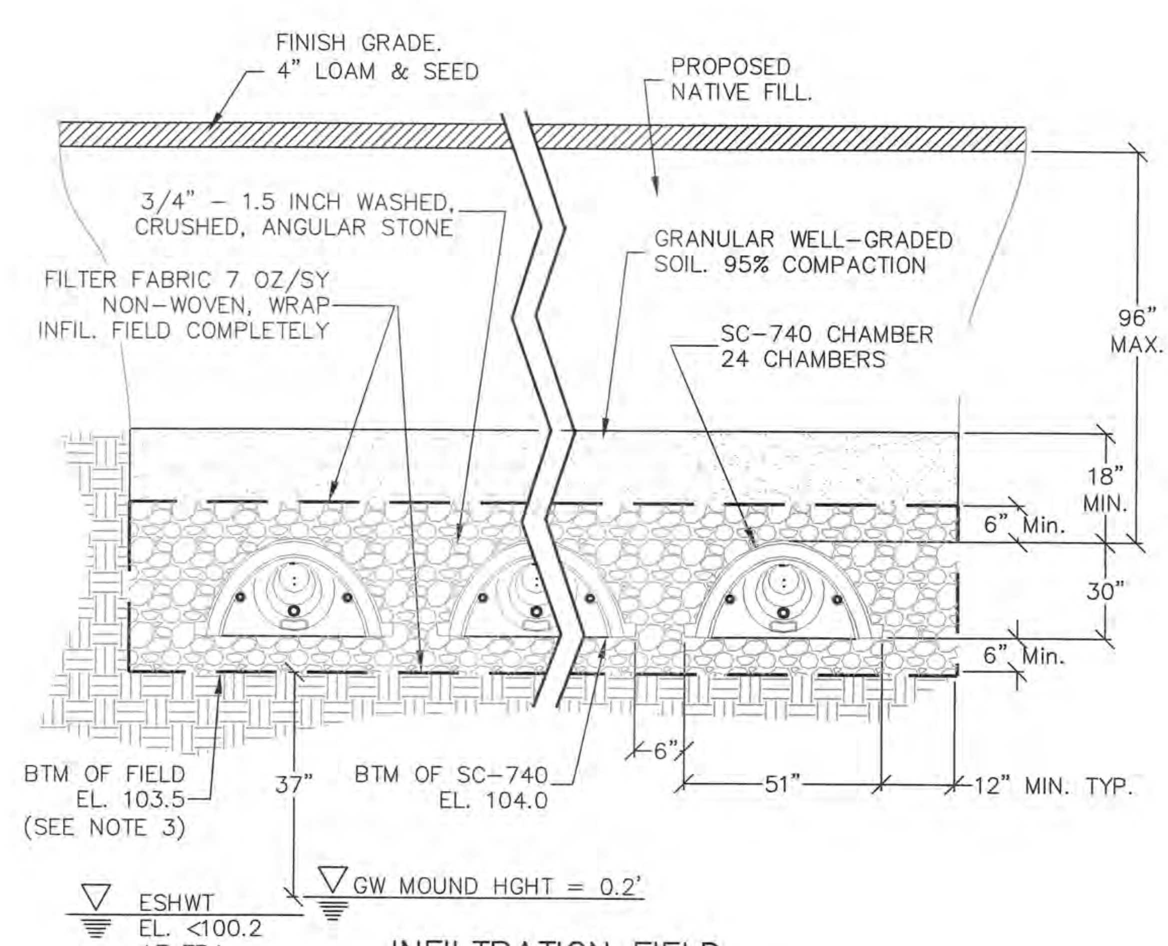

INFILTRATION FIELD TYPICAL CROSS SECTION STORMTECH SC-740 CHAMBER SYSTEM

N.T.S.

NOTES:
1) PROPOSED FIELD DIMENSIONS 33' x 34'.
2) MANUFACTURED BY STORMTECH OF 20 BEAVER ROAD, SUITE 104, WETHERSFIELD, CT 06109 USA 888-892-2694
3) CONTRACTOR TO REMOVE ANY TOPSOIL & SUBSOIL FROM BELOW THE INFILTRATION FIELD AND ESTABLISH BOTTOM OF FIELD GRADE. IF FILL MATERIAL IS REQUIRED, IMPORT CLEAN SAND MEETING THE SPECIFICATIONS OF "TITLE 5" SAND OR APPROVED EQUAL.

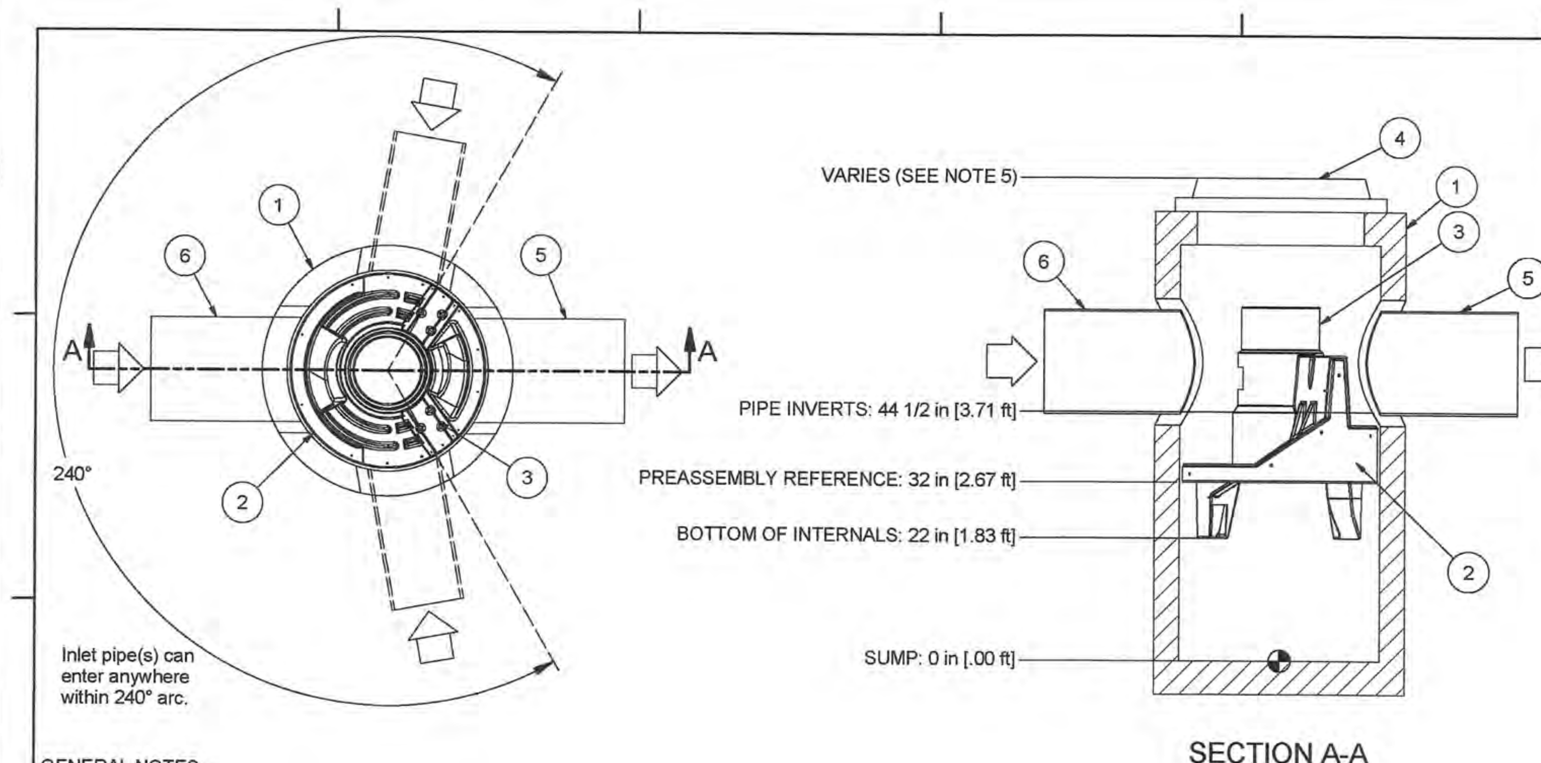

GENERAL NOTES:
1. General Arrangement drawings only. Contact Hydro International for site specific fabrication drawings.
2. The diameter of the inlet & outlet pipes may be no more than 18".
3. Multiple inlet pipes possible (refer to project plans).
4. Inlet/outlet pipe angle can vary to align with drainage network (refer to project plans).
5. Peak flow rate and minimum height limited by available cover and pipe diameter.
6. Larger sediment storage capacity may be provided with a deeper sump depth.

PRODUCT SPECIFICATIONS:
A. The treatment system shall use an induced vortex to separate pollutants from stormwater runoff.
B. The treatment system shall fit within the limits of excavation (area and depth) as shown in the project plans and will not exceed the dimensions for the design flow rates specified herein.
C. The treatment system shall remove greater than or equal to 90% of TSS based on the Target Particle Size (TPS) of 106 Microns and/or 80% of TSS based on the TPS of 230 microns at 0.3 cfs and 0.53 cfs, respectively.
D. The treatment system shall convey the Peak On-line Flow Rates of up to 15 cfs without causing upstream surcharge conditions. Full-scale independent laboratory scour testing shall demonstrate effluent control of less than or equal to 5 mg/L for all flows up to 200% of MTFR-106.
E. The treatment system shall be capable of capturing and retaining fine silt and sand size particles. Analysis of captured sediment from full-scale field installations shall demonstrate particle sizes predominately in the 20-micron range

PARTS LIST

ITEM	SIZE (in)	DESCRIPTION
1	36	I.D. PRECAST MANHOLE
2		LEDGER SUPPORT
3		SEPARATION MODULE
4	30	FRAME AND COVER (ROUND)
5	18	OUTLET PIPE (BY OTHERS)
6	18	INLET PIPE (BY OTHERS)

ANY WARRANTY GIVEN BY HYDRO INTERNATIONAL WILL APPLY ONLY TO THOSE ITEMS SUPPLIED BY IT. ACCORDINGLY HYDRO INTERNATIONAL CANNOT ACCEPT ANY RESPONSIBILITY FOR ANY STRUCTURE, PLANT, OR EQUIPMENT, (OR THE PERFORMANCE THERE OF) DESIGNED, BUILT, MANUFACTURED, OR SUPPLIED BY ANY THIRD PARTY. HYDRO INTERNATIONAL HAVE A POLICY OF CONTINUOUS DEVELOPMENT AND RESERVE THE RIGHT TO AMEND THE SPECIFICATION. HYDRO INTERNATIONAL CANNOT ACCEPT LIABILITY FOR PERFORMANCE OF ITS EQUIPMENT, (OR ANY PART THEREOF), IF THE EQUIPMENT IS SUBJECT TO CONDITIONS OUTSIDE ANY DESIGN SPECIFICATION. HYDRO INTERNATIONAL OWNS THE COPYRIGHT OF THIS DRAWING, WHICH IS SUPPLIED IN CONFIDENCE. IT MUST NOT BE USED FOR ANY PURPOSE OTHER THAN THAT FOR WHICH IT IS SUPPLIED AND MUST NOT BE REPRODUCED, IN WHOLE OR IN PART, WITHOUT PRIOR PERMISSION IN WRITING FROM HYDRO INTERNATIONAL.
©2016 HYDRO INTERNATIONAL

DO NOT SCALE DRAWING
UNLESS OTHERWISE SPECIFIED, DIMENSIONS ARE IN INCHES. TOLERENCES ARE:
FRACTIONS ± 1/16
DECIMALS ± .06
ANGLES ± 1°

PROJECTION

COMMENTS:
1. MANHOLE WALL AND SLAB THICKNESSES ARE NOT TO SCALE.
2. CONTACT HYDRO INTERNATIONAL FOR A BOTTOM OF STRUCTURE ELEVATION PRIOR TO SETTING FIRST DEFENSE MANHOLE.
3. CONTRACTOR TO CONFIRM RIM, PIPE INVERTS, PIPE DIA. AND PIPE ORIENTATION PRIOR TO RELEASE OF UNIT TO FABRICATION.

REVISION HISTORY

REV	BY	DESCRIPTION	DATE
-	JB	FIRST RELEASE	9/1/16

DATE: 9/1/2016 SCALE: NTS
DRAWN BY: JB CHECKED BY: APPROVED BY:
Title: 3-ft DIAMETER FIRST DEFENSE HIGH CAPACITY
GENERAL ARRANGEMENT

Hydro International
94 Hutchins Drive
Portland, ME 04102
Tel: +1 (207) 756-6200
Fax: +1 (207) 756-6212
hydro-int.com

APPROX WEIGHT: N/A MATERIAL:
NEXT ASSEMBLY: N/A
DRAWING NO.: F3HCS1
SHEET SIZE: B SHEET: 1 OF 1 Rev: -

3'ø WATER QUALITY STRUCTURE

N.T.S.

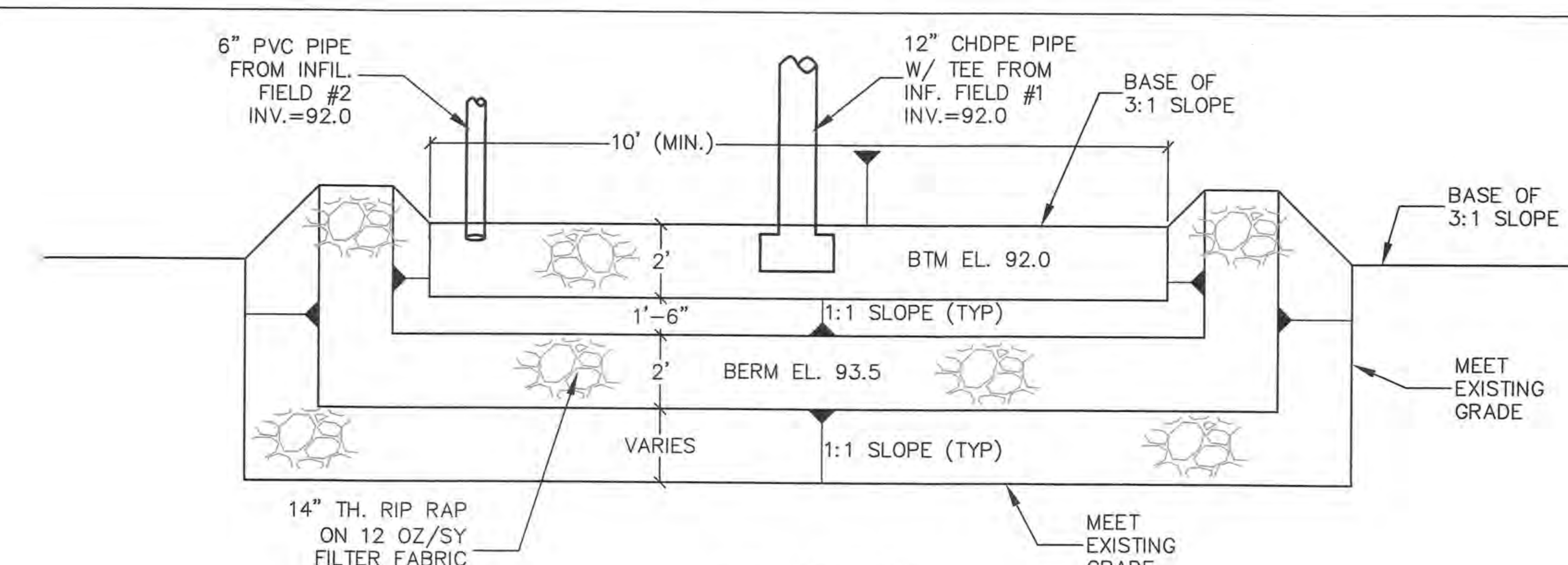

LEVEL SPREADER

N.T.S.

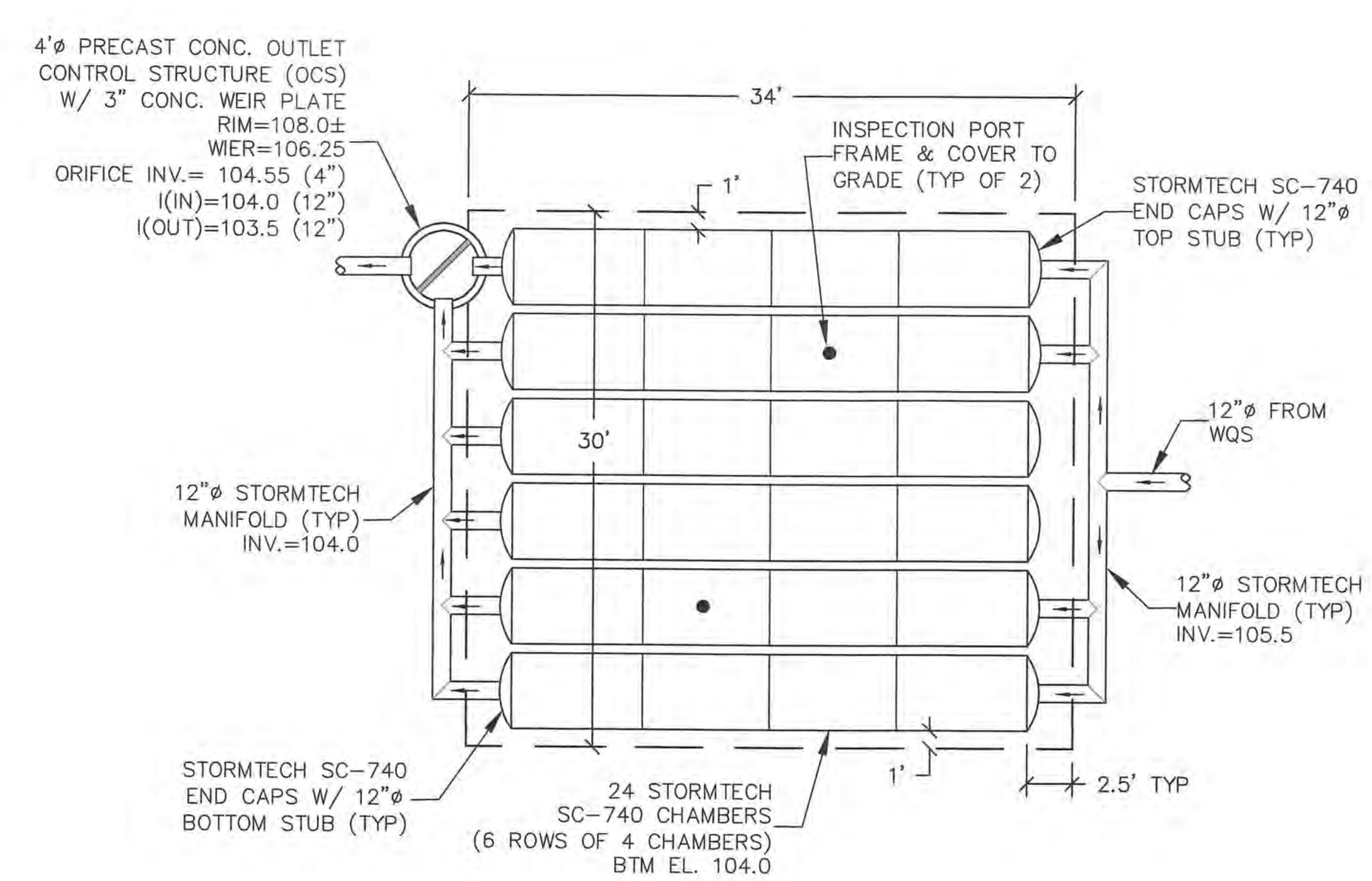

INFILTRATION FIELD #1

SCALE: 1"=8'

No.	Date	Description

Revisions

COMMONWEALTH OF MASSACHUSETTS ROBERT H. GRIFFIN CIVIL #36686 PROFESSIONAL ENGINEER
3.6.19

Griffin Engineering Group, LLC
495 Cabot Street, 2nd Floor
Beverly, MA 01915
Tel: 978-927-5111
Fax: 978-927-5103

HICKORY STREET REALTY TRUST
THAXTON ROAD
BEVERLY, MA

THAXTON HEIGHTS RD.

DETAILS II

Scale: 1"=40'
Job No.: 1729
File Name: p/p/mc/th
Date: 3/6/19

C-7

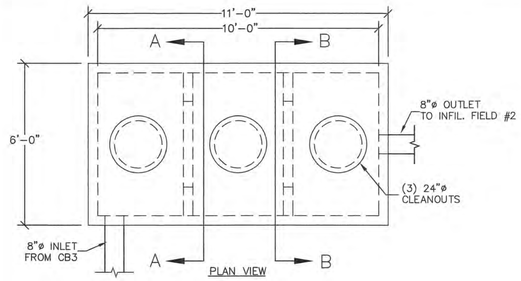

PLAN VIEW

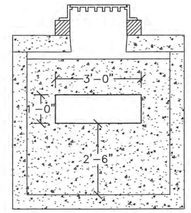

SECTION A–A VIEW

BAFFLE WALL DETAIL

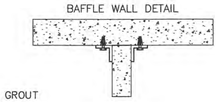

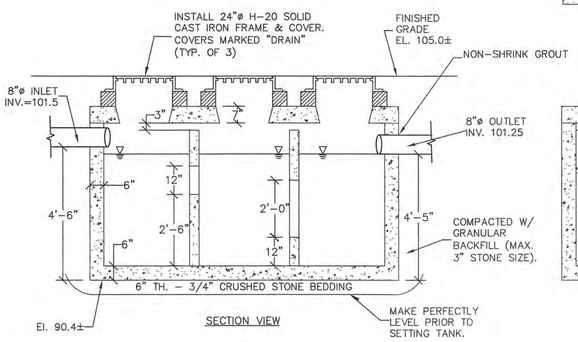

SECTION VIEW

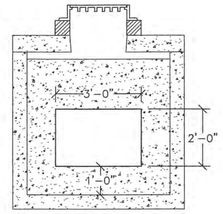

SECTION B–B VIEW

NOTES:
1. CONCRETE: 5,000 PSI MIN. AFTER 28 DAYS.
2. DESIGNED FOR H-20 LOADING.
3. TONGUE & GROOVE JOINT SEALED W/ BUTLY RESIN.
4. SHEA CONCRETE SEDIMENT & OIL SEPARATOR, 1500 GALLON TANK OR APPROVED EQUIVALENT. (PRODUCT ID. M1500CSEP)

OIL GRIT SEPARATOR

NOT TO SCALE

SOIL TEST PIT DATA (1/16/19)

TP1 (EL. 90.5)

DEPTH	HORIZON	TEXTURE	COLOR	MOTTLES	OTHER
0–12	Ap	FSL	10YR 2/2		GRANUALR, FRIABLE
12–20	Bw	FSL	10YR 4/6		MASSIVE, FRIABLE, TRACE GRAVEL
20–32	C1	FSL	10YR 5/8		MASSIVE, FRIABLE, SOME GRAVEL
32–60	C2	SL	10YR 5/8		MASSIVE FRIABLE, GRAVELLY, LARGE BOULDER

NO REFUSAL, NO MOTTLES, ROOTS TO 56"
ESHWT EL. <85.5 (>60")

TP2 (EL. 87.8)

DEPTH	HORIZON	TEXTURE	COLOR	MOTTLES	OTHER
0–5	Ap	FSL	10YR 2/2		GRANUALR, FRIABLE
5–24	B/C	SL	10YR 4/6		MASSIVE, FRIABLE, TRACE GRAVEL
24–62	C	SL	10YR 5/8	7.5YR 4/6	MASSIVE, FRIABLE, GRAVELLY, POCKETS OF COARSE SAND

NO REFUSAL
ESHWT EL. 84.3 (42")

TP3 (EL. 106.9)

DEPTH	HORIZON	TEXTURE	COLOR	MOTTLES	OTHER
0–6	Ap	FSL	10YR 3/2		GRANULAR, FRIABLE
6–24	Bw	SL	10YR 4/4		MASSIVE, FRIABLE, TRACE GRAVEL
24–88	C	LS	10YR 5/4		MASSIVE, FRIABLE, VERY GRAVELLY

NO REFUSAL, NO MOTTLES, ROOTS TO 48"
ESHWT EL. <99.6 (>88")

TP4 (EL. 108.5)

DEPTH	HORIZON	TEXTURE	COLOR	MOTTLES	OTHER
0–10	Ap	FSL	10YR 3/2		GRANULAR, FRIABLE
10–24	Bw	SL	10YR 4/6		MASSIVE, FRIABLE, TRACE GRAVEL
24–100	C	LS	10YR 5/4		MASSIVE, FRIABLE, VERY GRAVELLY

NO REFUSAL, ROOTS TO 52" POCKET OF COARSE SAND
ESHWT EL. <100.2 (>100")

TP5 (EL. 105.3)

DEPTH	HORIZON	TEXTURE	COLOR	MOTTLES	OTHER
0–6	Ap	FSL	10YR 3/2		GRANULAR, FRIABLE
6–24	Bw	SL	10YR 4/6		MASSIVE, FRIABLE, TRACE GRAVEL
24–72	C	LS/SL	10YR 5/4		MASSIVE, FRIABLE, VERY GRAVELLY

NO REFUSAL, NO MOTTLES
ESHWT EL. <99.3 (>72")

TP6 (EL. 116.4)

DEPTH	HORIZON	TEXTURE	COLOR	MOTTLES	OTHER
0–6	Ap	FSL	10YR 3/2		GRANULAR, FRIABLE
6–20	Bw	SL	10YR 4/6		MASSIVE, FRIABLE, TRACE GRAVEL
20–96	C	SL	10YR 5/6		MASSIVE, FRIABLE, SOME GRAVELLY

NO REFUSAL, NO MOTTLES
ESHWT EL. <108.4 (>96")

No.	Date	Description

Revisions

Griffin Engineering Group, LLC
495 Cabot Street, 2nd Floor
Beverly, MA 01915
Tel: 978-927-5111
Fax: 978-927-5103

HICKORY STREET
REALTY TRUST
THAXTON ROAD
BEVERLY, MA

THAXTON HEIGHTS RD.

DETAILS III

Scale: 1"=40'
Job No.: 1729
File Name: p/p/mc/th
Date: 3/6/19

C-8