REVISIONS

NO.	DATE	DESCRIPTION
1	12/17/18	REVISED PER PEER REVIEW AND ABUTTER COMMENTS
2	3/28/19	ADD SHEETS C3a & C3b

DEFINITIVE SUBDIVISION PLAN
for
LIVINGSTONE AVENUE IMPROVEMENTS

Beverly, MA
MARCH 2018
(REV. MARCH 2019)

OWNER & APPLICANT: 7 PORTER TERRACE LLC
37 HIGH STREET
DANVERS, MA 01923

ENGINEER: GRIFFIN ENGINEERING GROUP, LLC
495 CABOT ST, 2ND FLOOR
BEVERLY, MA 01915

ROBERT H. GRIFFIN CIVIL #39686
COMMONWEALTH OF MASSACHUSETTS PROFESSIONAL ENGINEER
3-28-19

SURVEYOR: LEBLANC SURVEY ASSOCIATES
161 HOLTEN STREET
DANVERS, MA 01923

I CERTIFY THAT THIS PLAN WAS PREPARED IN ACCORDANCE WITH THE RULES AND REGULATIONS OF THE REGISTERS OF DEEDS.

DATE _____ _____

FOR REGISTRY USE ONLY

I, _____, CLERK OF THE CITY OF BEVERLY, MA, CERTIFY THAT THE NOTICE OF APPROVAL OF THIS PLAN BY THE BEVERLY PLANNING BOARD HAS BEEN RECEIVED AND RECORDED IN THIS OFFICE AND THAT NO APPEAL WAS RECEIVED DURING THE TWENTY (20) DAYS NEXT AFTER SUCH RECEIPT AND RECORDING OF SUCH NOTICE.

_____ BEVERLY CITY CLERK

_____ DATE

LOCUS PLAN SCALE: 1" = 800' +/-

List of Drawings:

COVER SHEET
C-1: EXISTING CONDITIONS
C-2: PLAN OF LAND
C-3: SITE PLAN
C-3a : DRAINAGE IMPROVEMENTS PLAN
C-3b : DRAINAGE IMPROVEMENTS PROFILE
C-4: UTILITIES PLAN
C-5: GENERAL NOTES, PROFILE & SECTION
C-6: DETAILS I
C-7: DETAILS II

LIST OF WAIVERS FROM SUBDIVISION REGULATIONS:

1. SECTION III.C.2: PLAN SCALE REQ'D IS 1"=40'. PLAN SCALE OF 1"=20' & 1"=30' PROVIDED.
2. SECTION IV.A.2.b: MIN. 300' CENTERLINE RADIUS REQ'D. EXISTING WAY HAS NO RADIUS. A 150' PAVEMENT CENTERLINE RADIUS IS PROPOSED.
3. SECTION IV.A.3: MIN. 50' R.O.W. & 32' PAVED WIDTH. A 40' R.O.W. EXISTS & 24' PAVED WIDTH IS PROPOSED.
4. (2) SECTION IV.A.5.a: DEAD END STREET <500' REQ'D. THE IMPROVEMENTS WILL EXTEND, BY APPROXIMATELY 400', THE EXISTING 250' LONG DEAD-END STREET (LIVINGSTONE AVE) (APPROX. 650' DEAD END STREET PROPOSED).
5. SECTION IV.A.5.b: CUL-DE-SAC REQUIRED AT DEAD END STREET. HAMMERHEAD PROPOSED DUE TO WIDTH OF RIGHT OF WAY.
6. SECTION IV.J: UNDERGROUND UTILITIES. OVERHEAD ELECTRIC, TELEPHONE, & CABLE SERVICES PROPOSED.
7. SECTION V.D: SIDEWALKS. NONE PROPOSED.
8. SECTION V.E: GRANITE CURBS. BITIMINOUS BERM OR NO BERM PROPOSED.
9. SECTION V.G: STREET TREES. NONE PROPOSED.
10. SECTION V.K. FIRE ALARM SYSTEM. NONE PROPOSED.

CITY OF BEVERLY
PLANNING BOARD

_____
_____
_____
_____
_____
_____
_____

DATE:

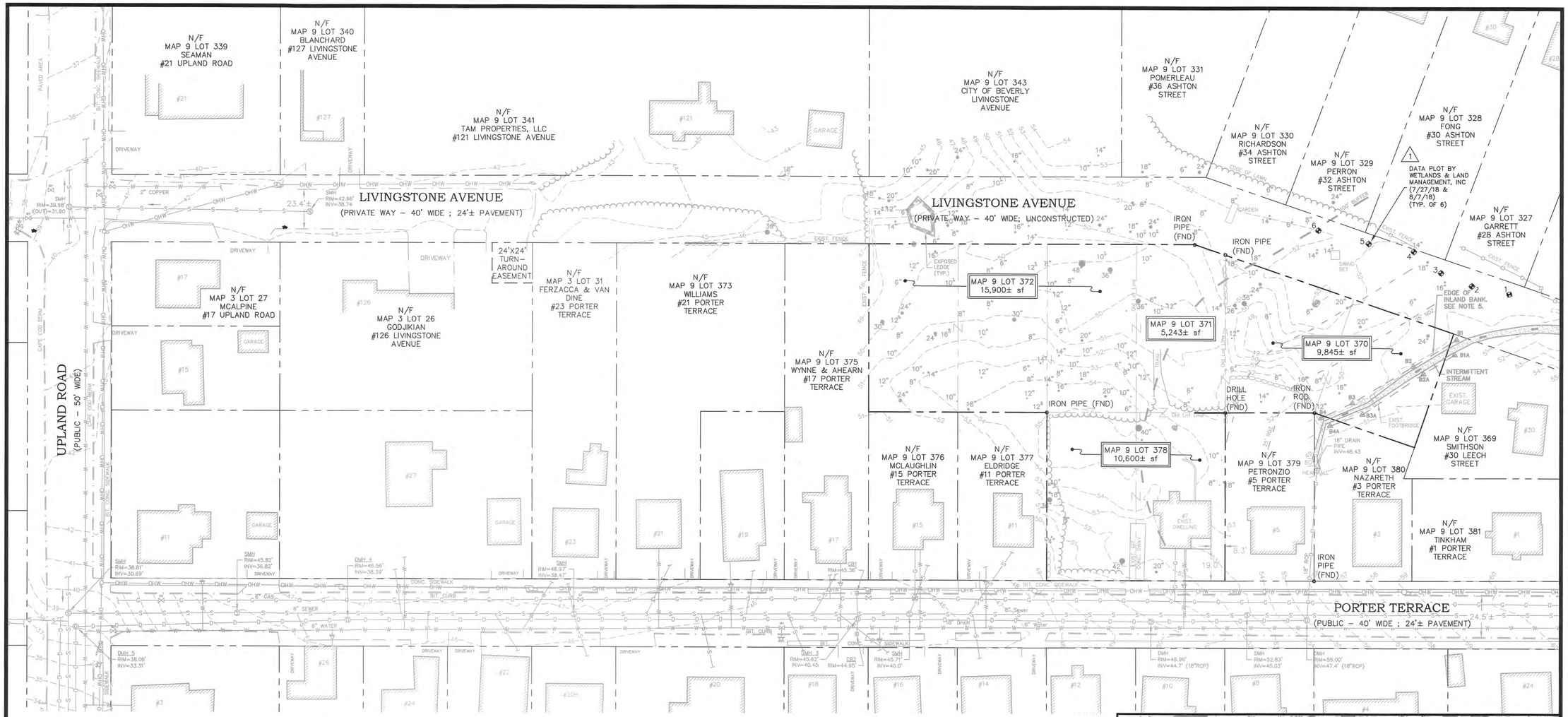

LEGEND

- Property Line
- Wetland (Inland Bank)
- Buffer Zone
- Exist. Building
- Exist. Exposed Ledge
- Exist. Edge of Pavement
- Exist. Water
- Exist. Sewer
- Exist. Drain
- Exist. Gas
- Exist. Overhead Wires
- Exist. Contour
- Exist. Spot Grade
- Exist. Tree Line

I CERTIFY THAT THIS PLAN WAS PREPARED IN ACCORDANCE WITH THE RULES AND REGULATIONS OF THE REGISTERS OF DEEDS.

DATE

FOR REGISTRY USE ONLY

I, _____, CLERK OF THE CITY OF BEVERLY, MA, CERTIFY THAT THE NOTICE OF APPROVAL OF THIS PLAN BY THE BEVERLY PLANNING BOARD HAS BEEN RECEIVED AND RECORDED IN THIS OFFICE AND THAT NO APPEAL WAS RECEIVED DURING THE TWENTY (20) DAYS NEXT AFTER SUCH RECEIPT AND RECORDING OF SUCH NOTICE.

BEVERLY CITY CLERK DATE

SITE PLAN

GRAPHIC SCALE

30 0 15 30 60 120

(IN FEET)
1 inch = 30 ft.

REFERENCES & NOTES:
1) ASSESSORS MAP 9 LOTS 370, 371, 372, & 378
2) ZONING DISTRICT: R10
3) BENCHMARK: SEWER MANHOLE INVERT IN FRONT OF HOUSE #5 – EL.=45.03
4) LOCUS PLAN: PLAN BOOK 24, PLAN 16 LOTS 339, 340, 361, 362, 363, 364, 365, 366.
5) LOCUS DEED: DEED BOOK 36487 PAGE 151

ZONING DISTRICT: R–10
MINIMUM LOT AREA: 10,000 SF
MINIMUM FRONTAGE: 100'
SETBACKS:
FRONT: 20'
SIDE: 15'
REAR: 25'

PLAN NOTES:
1. EXISTING CONDITIONS HEREIN WERE DEVELOPED BY INSTRUMENT FIELD SURVEY BY LEBLANC SURVEY ASSOCIATES OF DANVERS MA IN 1996 AND UPDATED BY GRIFFIN ENGINEERING IN 2016 & 2017.
2. ELEVATIONS SHOWN ARE ON THE CITY OF BEVERLY DATUM (BEVERLY DATUM – 6.34' = N.A.V.D. 1988 DATUM).
3. PROPERTY IS LOCATED WITHIN THE R–10 ZONING DISTRICT.
4. FEMA FLOOD MAP #25009C0417G (EFF. 7/16/14) INDICATES SITE IS NOT LOCATED WITHIN ANY FLOOD HAZARD AREAS.
5. WETLANDS FLAGGED BY WETLANDS & LAND MANAGEMENT OF DANVERS, MA IN APRIL 2017.

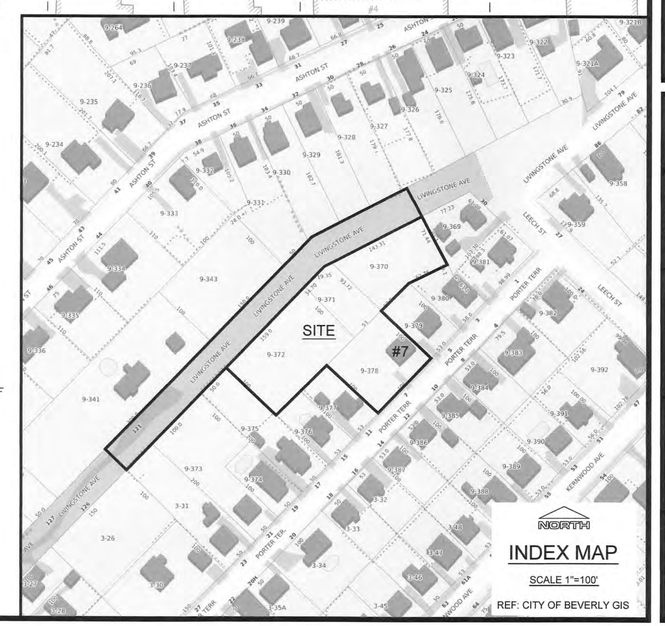

CITY OF BEVERLY PLANNING BOARD

DATE:

No.	Date	Description
2	3/28/19	ADD ADD'TL PORTER TER. GRADES & UTIL.
1	12/17/18	ADD TREES > 6" DBH; ADD DATA PLOTS.

Revisions

COMMONWEALTH OF MASSACHUSETTS
ROBERT H. GRIFFIN
CIVIL
#36686
PROFESSIONAL ENGINEER
3.28.19

Griffin Engineering Group, LLC
495 Cabot Street, 2nd Floor
Beverly, MA 01915
Tel: 978-927-5111
Fax: 978-927-5103

LIVINGSTONE AVENUE IMPROVEMENTS BEVERLY, MA

EXISTING CONDITIONS PLAN

Scale: 1"=30'
Job No.: 1754
File Name: p/p/b/m
Date: 2/23/18

C–1

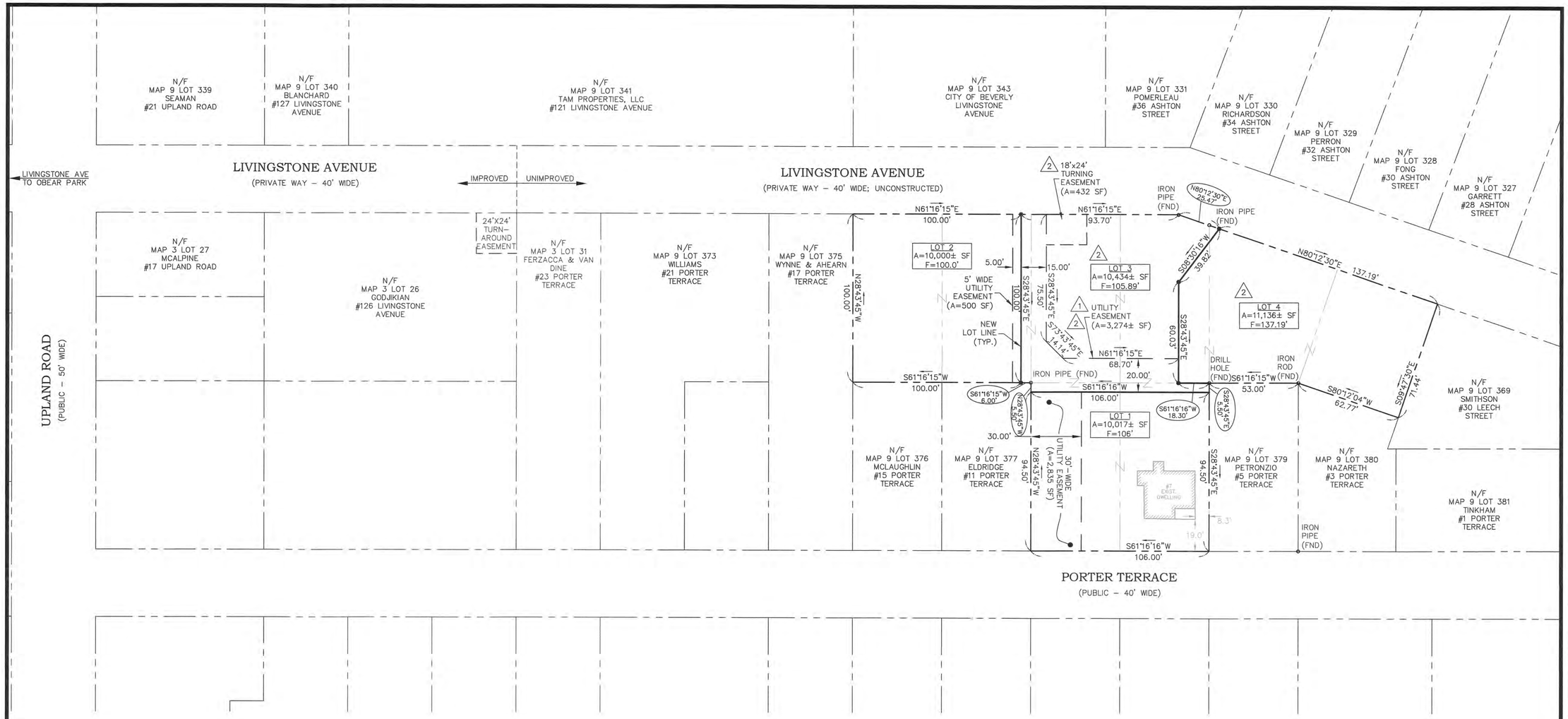

1/2 AREA ADJUSTMENT FOR WETLANDS & TURNAROUND EASEMENT

LOT	TOTAL AREA	AREA IN WETLANDS	20% OF WETLAND AREA	TURNAROUND EASEMENT AREA	TOTAL ADJUSTED AREA
1	10,017 S.F.	0 S.F.	0 S.F.	0 S.F.	10,017 S.F.
2	10,000 S.F.	0 S.F.	0 S.F.	0 S.F.	10,000 S.F.
3	10,434 S.F.	0 S.F.	0 S.F.	432 S.F.	10,002 S.F.
4	11,136 S.F.	602 S.F.	120 S.F.	0 S.F.	10,654 S.F.

LEGEND

- N72°32'14"E / 177.24' — EXIST. PROPERTY LINE
- N23°43'25"W / 127.48' — PROP. PROPERTY LINE
- EXIST. IRON ROD OR DRILL HOLE
- PROP. IRON ROD TO BE SET
- B2 — WETLAND BOUNDARY

COMMONWEALTH OF MASSACHUSETTS
ROBERT H. GRIFFIN CIVIL #30886
PROFESSIONAL ENGINEER
3.28.18

I CERTIFY THAT THIS PLAN WAS PREPARED IN ACCORDANCE WITH THE RULES AND REGULATIONS OF THE REGISTERS OF DEEDS.

DATE

FOR REGISTRY USE ONLY

I, _____, CLERK OF THE CITY OF BEVERLY, MA, CERTIFY THAT THE NOTICE OF APPROVAL OF THIS PLAN BY THE BEVERLY PLANNING BOARD HAS BEEN RECEIVED AND RECORDED IN THIS OFFICE AND THAT NO APPEAL WAS RECEIVED DURING THE TWENTY (20) DAYS NEXT AFTER SUCH RECEIPT AND RECORDING OF SUCH NOTICE.

BEVERLY CITY CLERK — DATE

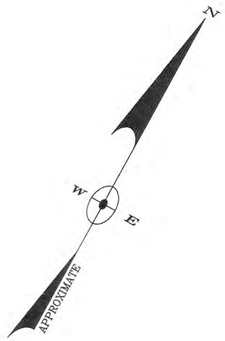

GRAPHIC SCALE

30 0 15 30 60 120

(IN FEET)
1 inch = 30 ft.

CITY OF BEVERLY PLANNING BOARD

DATE:

No.	Date	Description
2	3/28/19	MOVE TURNING EASEMENT; ADJUST LOT 3/4 LOT LINE; UPDATE AREA TABLE.
1	12/17/18	REVISE EASEMENTS

Revisions

LEBLANC SURVEY ASSOCIATES

161 HOLTEN STREET
DANVERS, MA 01923
978-774-6012

Griffin Engineering Group, LLC

495 Cabot Street, 2nd Floor
Beverly, MA 01915

Tel: 978-927-5111
Fax: 978-927-5103

LIVINGSTONE AVENUE IMPROVEMENTS BEVERLY, MA

PLAN OF LAND

Scale: 1"=30'
Job No.: 1754
File Name: p/p/b/m
Date: 3/23/18

C-2

ZONING DISTRICT: R-10
MINIMUM LOT AREA: 10,000 SF
MINIMUM FRONTAGE: 100'
SETBACKS:
FRONT: 20'
SIDE: 15'
REAR: 25'

▲ ELEVATION BENCHMARKS DATUM:		
NO.	DESCRIPTION	ELEV.
1.	NAIL AT #7 DRIVEWAY	50.89'
2.	IRON PIPE @ #11 LOT CNR	54.96'
3.	SMH INV. @ HOUSE #5	45.03'

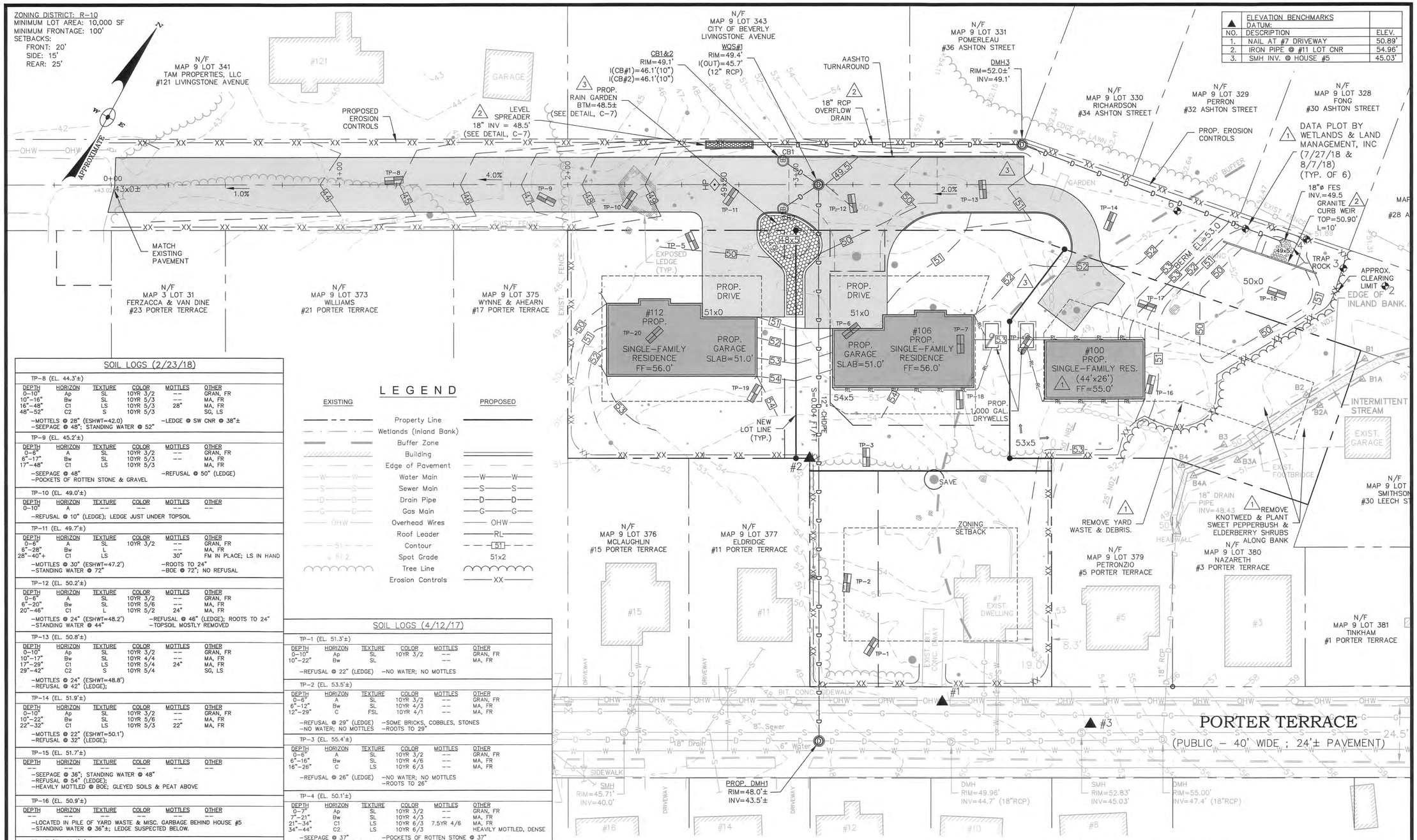

SOIL LOGS (2/23/18)

TP-8 (EL. 44.3'±)

DEPTH	HORIZON	TEXTURE	COLOR	MOTTLES	OTHER
0–10"	Ap	SL	10YR 3/2	--	GRAN, FR
10"–16"	Bw	SL	10YR 5/3	--	MA, FR
16"–48"	C1	LS	10YR 5/3	28"	MA, FR
48"–52"	C2	S	10YR 5/3		SG, LS

–MOTTELS @ 28" (ESHWT=42.0) –LEDGE @ SW CNR @ 38"±
–SEEPAGE @ 48"; STANDING WATER @ 52"

TP-9 (EL. 45.2'±)

DEPTH	HORIZON	TEXTURE	COLOR	MOTTLES	OTHER
0–6"	A	SL	10YR 3/2	--	GRAN, FR
6"–17"	Bw	SL	10YR 5/3	--	MA, FR
17"–48"	C1	LS	10YR 5/3		MA, FR

–SEEPAGE @ 48" –REFUSAL @ 50" (LEDGE)
–POCKETS OF ROTTEN STONE & GRAVEL

TP-10 (EL. 49.0'±)

DEPTH	HORIZON	TEXTURE	COLOR	MOTTLES	OTHER
0–10"	A	--	--	--	--

–REFUSAL @ 10" (LEDGE); LEDGE JUST UNDER TOPSOIL

TP-11 (EL. 49.7'±)

DEPTH	HORIZON	TEXTURE	COLOR	MOTTLES	OTHER
0–6"	A	SL	10YR 3/2	--	GRAN, FR
6"–28"	Bw	L		--	MA, FR
28"–40"+	C1	LS		30"	FM IN PLACE; LS IN HAND

–MOTTLES @ 30" (ESHWT=47.2') –ROOTS TO 24"
–STANDING WATER @ 72" –BOE @ 72"; NO REFUSAL

TP-12 (EL. 50.2'±)

DEPTH	HORIZON	TEXTURE	COLOR	MOTTLES	OTHER
0–6"	A	SL	10YR 3/2	--	GRAN, FR
6"–20"	Bw	SL	10YR 5/6	--	MA, FR
20"–46"	C1	L	10YR 5/2	24"	MA, FR

–MOTTLES @ 24" (ESHWT=48.2') –REFUSAL @ 46" (LEDGE); ROOTS TO 24"
–STANDING WATER @ 44" –TOPSOIL MOSTLY REMOVED

TP-13 (EL. 50.8'±)

DEPTH	HORIZON	TEXTURE	COLOR	MOTTLES	OTHER
0–10"	Ap	SL	10YR 3/2	--	GRAN, FR
10"–17"	Bw	SL	10YR 4/4	--	MA, FR
17"–29"	C1	LS	10YR 5/4	24"	MA, FR
29"–42"	C2	S	10YR 5/4		SG, LS

–MOTTLES @ 24" (ESHWT=48.8")
–REFUSAL @ 42" (LEDGE);

TP-14 (EL. 51.9'±)

DEPTH	HORIZON	TEXTURE	COLOR	MOTTLES	OTHER
0–10"	Ap	SL	10YR 3/2	--	GRAN, FR
10"–22"	Bw	SL	10YR 5/6	--	MA, FR
22"–32"	C1	LS	10YR 5/3	22"	MA, FR

–MOTTLES @ 22" (ESHWT=50.1')
–REFUSAL @ 32" (LEDGE);

TP-15 (EL. 51.7'±)

DEPTH	HORIZON	TEXTURE	COLOR	MOTTLES	OTHER
--	--	--	--	--	--

–SEEPAGE @ 36"; STANDING WATER @ 48"
–REFUSAL @ 54" (LEDGE);
–HEAVILY MOTTLED @ BOE; GLEYED SOILS & PEAT ABOVE

TP-16 (EL. 50.9'±)

DEPTH	HORIZON	TEXTURE	COLOR	MOTTLES	OTHER
--	--	--	--	--	--

–LOCATED IN PILE OF YARD WASTE & MISC. GARBAGE BEHIND HOUSE #5
–STANDING WATER @ 36"±; LEDGE SUSPECTED BELOW.

TP-17 (EL. 52.0'±)

DEPTH	HORIZON	TEXTURE	COLOR	MOTTLES	OTHER
0–12"	A	--	--	--	--

–REFUSAL @ 12" (LEDGE); LEDGE JUST UNDER TOPSOIL
–EXPOSED LEDGE APPROX. 15' EAST.

TP-18 (EL. 51.2'±)

DEPTH	HORIZON	TEXTURE	COLOR	MOTTLES	OTHER
0–8"	Ap	SL	10YR 3/2	--	GRAN, FR
8"–22"	Bw	SL	10YR 5/6	--	MA, FR
22"–66"	C1	LS	10YR 5/4	24"	MA, FR

–MOTTLES @ 24" (ESHWT=49.2') –ROOT TO 22"
–SEEPAGE @ 66" –NO REFUSAL

TP-19 (EL. 53.0'±)

DEPTH	HORIZON	TEXTURE	COLOR	MOTTLES	OTHER
0–6"	A	--	--	--	--

–REFUSAL @ 6" (LEDGE); LEDGE JUST UNDER TOPSOIL

TP-20 (EL. 50.8'±)

DEPTH	HORIZON	TEXTURE	COLOR	MOTTLES	OTHER
0–10"	Ap	SL	10YR 3/2	--	GRAN, FR
10"–24"	Bw	SL		--	MA, FR
24"–60"	C1	LS		36"	MA, FR – POCKETS OF SAND & ROTTEN STONE

–MOTTLES @ 36" (ESHWT=47.8") –ROOTS TO 18"
–REFUSAL @ 60" (LEDGE); –NO WATER

LEGEND

EXISTING		PROPOSED
	Property Line	
	Wetlands (Inland Bank)	
	Buffer Zone	
	Building	
	Edge of Pavement	
W W	Water Main	W W
S S	Sewer Main	S S
D D	Drain Pipe	D D
G G	Gas Main	G G
OHW	Overhead Wires	OHW
	Roof Leader	RL
51	Contour	51
51.2	Spot Grade	51x2
	Tree Line	
	Erosion Controls	XX

SOIL LOGS (4/12/17)

TP-1 (EL. 51.3'±)

DEPTH	HORIZON	TEXTURE	COLOR	MOTTLES	OTHER
0–10"	Ap	SL	10YR 3/2	--	GRAN, FR
10"–22"	Bw	SL		--	MA, FR

–REFUSAL @ 22" (LEDGE) –NO WATER; NO MOTTLES

TP-2 (EL. 53.5'±)

DEPTH	HORIZON	TEXTURE	COLOR	MOTTLES	OTHER
0–6"	A	SL	10YR 3/2	--	GRAN, FR
6"–12"	Bw	SL	10YR 4/3	--	MA, FR
12"–29"	C	FSL	10YR 4/1		MA, FR

–REFUSAL @ 29" (LEDGE) –SOME BRICKS, COBBLES, STONES
–NO WATER; NO MOTTLES –ROOTS TO 29"

TP-3 (EL. 55.4'±)

DEPTH	HORIZON	TEXTURE	COLOR	MOTTLES	OTHER
0–6"	A	SL	10YR 3/2	--	GRAN, FR
6"–16"	Bw	SL	10YR 4/6	--	MA, FR
16"–26"	C	LS	10YR 6/3	--	MA, FR

–REFUSAL @ 26" (LEDGE) –NO WATER; NO MOTTLES
–ROOTS TO 26"

TP-4 (EL. 50.1'±)

DEPTH	HORIZON	TEXTURE	COLOR	MOTTLES	OTHER
0–7"	Ap	SL	10YR 3/2	--	GRAN, FR
7"–21"	Bw	SL	10YR 4/3	--	MA, FR
21"–34"	C1	LS	10YR 6/3	7.5YR 4/6	MA, FR
34"–44"	C2	LS	10YR 6/3		HEAVILY MOTTLED, DENSE

–SEEPAGE @ 37" –POCKETS OF ROTTEN STONE @ 37"
–DIFFICULT DIGGING @ 44" –MOTTLES @ 27"; ESHWT @ 27" (EL: 47.85')

TP-5 (EL. 50.0'±)

DEPTH	HORIZON	TEXTURE	COLOR	MOTTLES	OTHER
0–7"	Ap	SL	10YR 3/2	--	GRAN, FR
7"–24"	Bw	SL	10YR 4/6	--	MA, FR
24"–53"	C1	LS	10YR 6/3	7.5YR 4/6	MA, FR
53"–86"	C2	LS	10YR 6/3		HEAVILY MOTTLED, DENSE

–LARGE STONES IN HOLE –POCKETS OF ROTTEN STONE @ B.O.E."
–REFUSAL @ 86" –MOTTLES @ 31"; ESHWT @ 31" (EL: 47.42')

TP-6 (EL. 47.0'±)

DEPTH	HORIZON	TEXTURE	COLOR	MOTTLES	OTHER
--	--	--	--	--	--

–TEST PIT DUG ON SIDE OF EXISTING GARBAGE PIT; MATERIAL CONSISTS OF ORGANIC YARD WASTE, & MISC. GARBAGE; BTM. OF HOLE IS LEDGE (4'± DOWN).

TP-7 (EL. 50.1'±)

DEPTH	HORIZON	TEXTURE	COLOR	MOTTLES	OTHER
0–7"	Ap	SL	10YR 3/2	--	GRAN, FR
7"–16"	Bw	SL	10YR 5/6	--	MA, FR
16"–24"	B/C	LS	10YR 6/3	7.5YR 4/6	MA, FR
24"–35"	C1	S	10YR 6/3		LOOSE, SG
35"–46"	C2	Gr LS	10YR 5/2		HEAVILY MOTTLED, DENSE

–SEEPAGE @ 46" –POCKETS OF ROTTEN STONE @ 35"
–MOTTLES @ 29"; ESHWT @ 29" (EL: 47.7')

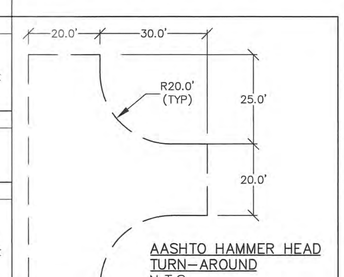

AASHTO HAMMER HEAD TURN–AROUND
N.T.S.

SITE PLAN

GRAPHIC SCALE

20 0 10 20 40 80

(IN FEET)
1 inch = 20 ft.

I CERTIFY THAT THIS PLAN WAS PREPARED IN ACCORDANCE WITH THE RULES AND REGULATIONS OF THE REGISTERS OF DEEDS.

_____ _____
DATE

I, _____, CLERK OF THE CITY OF BEVERLY, MA, CERTIFY THAT THE NOTICE OF APPROVAL OF THIS PLAN BY THE BEVERLY PLANNING BOARD HAS BEEN RECEIVED AND RECORDED IN THIS OFFICE AND THAT NO APPEAL WAS RECEIVED DURING THE TWENTY (20) DAYS NEXT AFTER SUCH RECEIPT AND RECORDING OF SUCH NOTICE.

_____ _____
BEVERLY CITY CLERK DATE

FOR REGISTRY USE ONLY

CITY OF BEVERLY PLANNING BOARD

DATE:

No.	Date	Description
3	3/28/19	REDUCE ROADWAY LENGTH; MOVE #106 RESIDENCE; REMOVE SUBSURFACE DET. FIELD; ADD PORTER/UPLAND DRAIN IMPROVEMENTS; ADJUST 100/106 LOT LINE.
2	12/27/18	INC. DET. FIELD SIZE; INC. OVERFLOW DRAIN PIPE SIZE; ADD PAV'T SPOT GRADES; ADD ROOF LEADERS.
1	12/17/18	INC. H.HEAD SIZE; RED. #100 FOOTPRINT & REVISE GRADING; INC. DET. FIELD SIZE; MOVE DET. FIELD; ADD TREES >6"; DBH; ADD KNOTWEED REMOVAL NOTE; REMOVE DRYWELLS; ADD TEST PLOT LOCATIONS.

Revisions

COMMONWEALTH OF MASSACHUSETTS ROBERT H. GRIFFIN CIVIL #36686 PROFESSIONAL ENGINEER
3.28.19

Griffin Engineering Group, LLC
495 Cabot Street, 2nd Floor
Beverly, MA 01915
Tel: 978-927-5111
Fax: 978-927-5103

LIVINGSTONE AVENUE IMPROVEMENTS
BEVERLY, MA

SITE PLAN

Scale: 1"=20'
Job No.: 1754
File Name: p/p/b/m
Date: 3/23/18

C-3

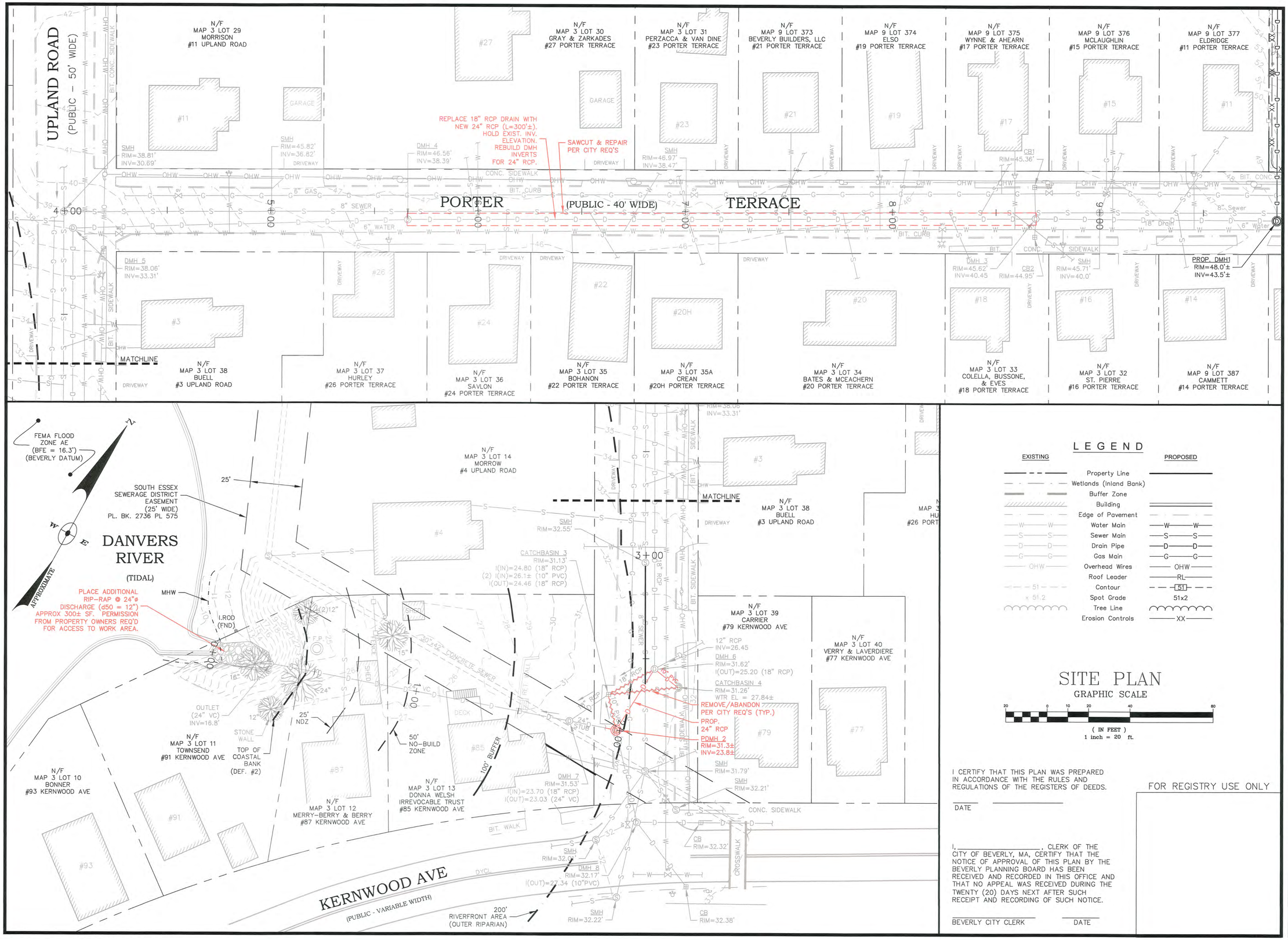

LEGEND

EXISTING		PROPOSED
	Property Line	
	Wetlands (Inland Bank)	
	Buffer Zone	
	Building	
	Edge of Pavement	
—W—W—	Water Main	—W—W—
—S—S—	Sewer Main	—S—S—
—D—D—	Drain Pipe	—D—D—
—G—G—	Gas Main	—G—G—
—OHW—	Overhead Wires	—OHW—
	Roof Leader	—RL—
—51—	Contour	—51—
× 51.2	Spot Grade	51x2
	Tree Line	
	Erosion Controls	—XX—

SITE PLAN

GRAPHIC SCALE

20 0 10 20 40 80

(IN FEET)
1 inch = 20 ft.

I CERTIFY THAT THIS PLAN WAS PREPARED IN ACCORDANCE WITH THE RULES AND REGULATIONS OF THE REGISTERS OF DEEDS.

DATE

I, _____, CLERK OF THE CITY OF BEVERLY, MA, CERTIFY THAT THE NOTICE OF APPROVAL OF THIS PLAN BY THE BEVERLY PLANNING BOARD HAS BEEN RECEIVED AND RECORDED IN THIS OFFICE AND THAT NO APPEAL WAS RECEIVED DURING THE TWENTY (20) DAYS NEXT AFTER SUCH RECEIPT AND RECORDING OF SUCH NOTICE.

BEVERLY CITY CLERK DATE

FOR REGISTRY USE ONLY

CITY OF BEVERLY PLANNING BOARD

DATE:

No.	Date	Description

Revisions

COMMONWEALTH OF MASSACHUSETTS ROBERT H. GRIFFIN CIVIL #36686 PROFESSIONAL ENGINEER

3.28.19

Griffin Engineering Group, LLC
495 Cabot Street, 2nd Floor
Beverly, MA 01915
Tel: 978-927-5111
Fax: 978-927-5103

LIVINGSTONE AVENUE IMPROVEMENTS BEVERLY, MA

PORTER TERRACE & UPLAND ROAD DRAINAGE IMPROVEMENTS

Scale: 1"=20'
Job No.: 1754
File Name: p/p/b/m
Date: 3/28/19

C-3a

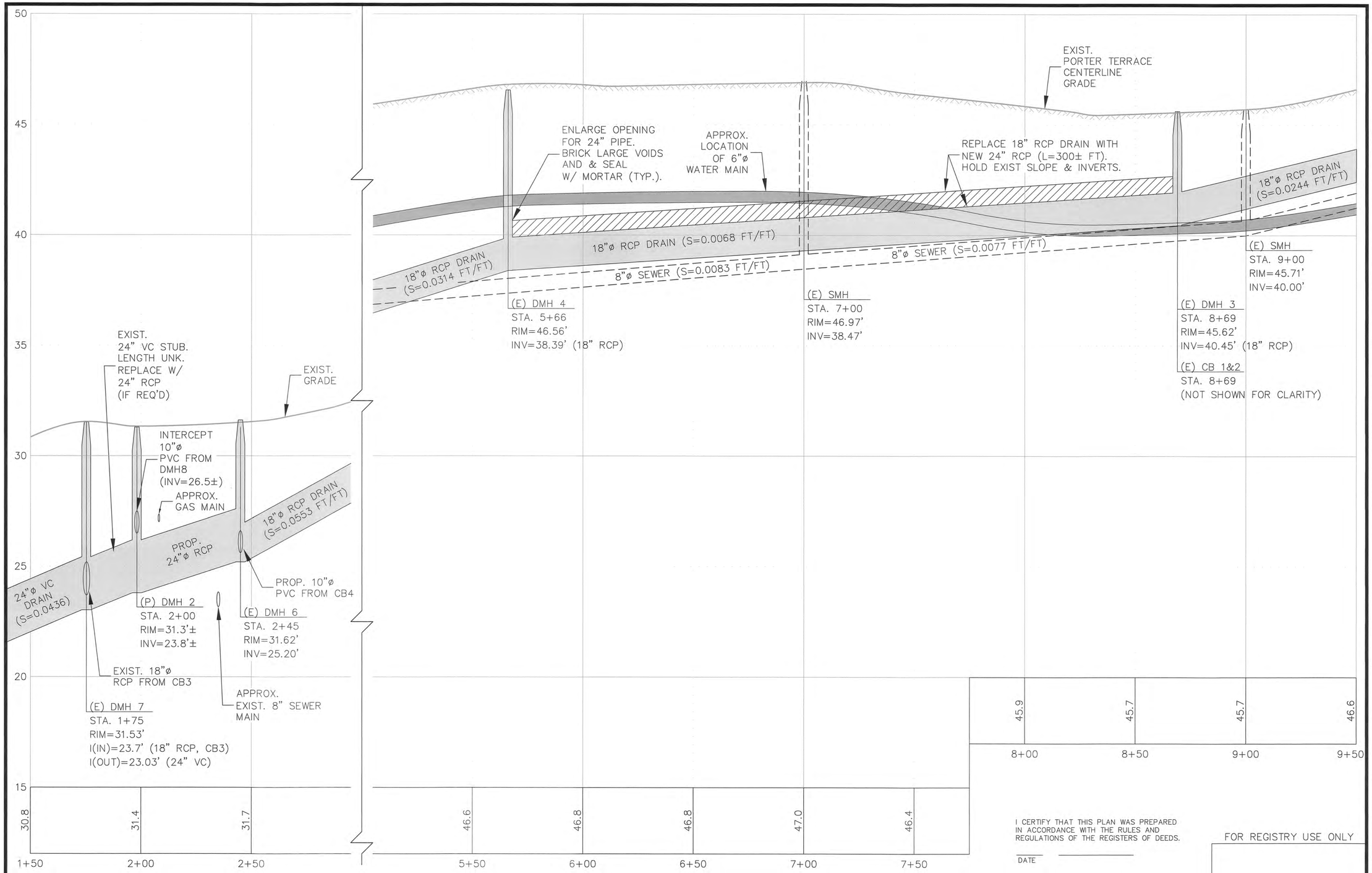

PORTER TERRACE & UPLAND ROAD DRAIN PROFILE

HORIZONTAL SCALE: 1"=20'

VERTICAL SCALE: 1"=2'

I CERTIFY THAT THIS PLAN WAS PREPARED IN ACCORDANCE WITH THE RULES AND REGULATIONS OF THE REGISTERS OF DEEDS.

DATE

I, _____, CLERK OF THE CITY OF BEVERLY, MA, CERTIFY THAT THE NOTICE OF APPROVAL OF THIS PLAN BY THE BEVERLY PLANNING BOARD HAS BEEN RECEIVED AND RECORDED IN THIS OFFICE AND THAT NO APPEAL WAS RECEIVED DURING THE TWENTY (20) DAYS NEXT AFTER SUCH RECEIPT AND RECORDING OF SUCH NOTICE.

BEVERLY CITY CLERK

DATE

FOR REGISTRY USE ONLY

CITY OF BEVERLY PLANNING BOARD

DATE:

No.	Date	Description

Revisions

ROBERT H. GRIFFIN CIVIL #36680 PROFESSIONAL ENGINEER

3-28-19

Griffin Engineering Group, LLC

495 Cabot Street, 2nd Floor
Beverly, MA 01915

Tel: 978-927-5111
Fax: 978-927-5103

LIVINGSTONE AVENUE IMPROVEMENTS BEVERLY, MA

PORTER TERRACE & UPLAND ROAD DRAINAGE IMPROVEMENTS

Scale: 1"=20'

Job No.: 1754

File Name: p/p/b/m

Date: 3/28/19

C-3b

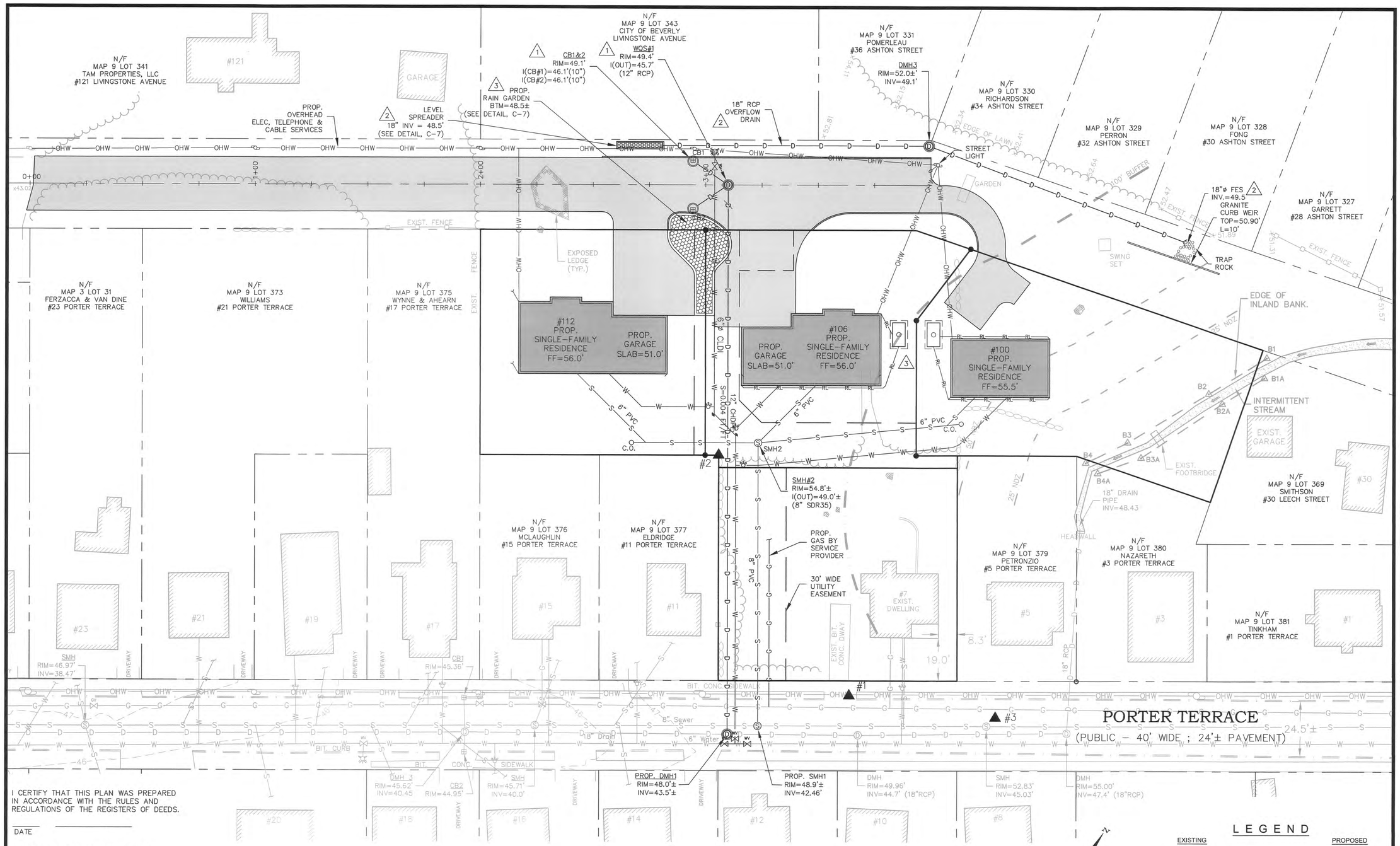

I CERTIFY THAT THIS PLAN WAS PREPARED IN ACCORDANCE WITH THE RULES AND REGULATIONS OF THE REGISTERS OF DEEDS.

DATE

FOR REGISTRY USE ONLY

I, _____, CLERK OF THE CITY OF BEVERLY, MA, CERTIFY THAT THE NOTICE OF APPROVAL OF THIS PLAN BY THE BEVERLY PLANNING BOARD HAS BEEN RECEIVED AND RECORDED IN THIS OFFICE AND THAT NO APPEAL WAS RECEIVED DURING THE TWENTY (20) DAYS NEXT AFTER SUCH RECEIPT AND RECORDING OF SUCH NOTICE.

BEVERLY CITY CLERK

DATE

NOTE:
RESIDENCES TO BE EQUIPPED WITH FIRE-SUPPRESSION SPRINKLERS

GRAPHIC SCALE

20 0 10 20 40 80

(IN FEET)
1 inch = 20 ft.

N

APPROXIMATE

LEGEND

EXISTING		PROPOSED
	Property Line	
	Wetlands (Inland Bank)	
	Buffer Zone	
	Building	
	Edge of Pavement	
—W—W—	Water Main	—W—W—
—S—S—	Sewer Main	—S—S—
—D—D—	Drain Pipe	—D—D—
—G—G—	Gas Main	—G—G—
—OHW—	Overhead Wires	—OHW—
	Roof Leader	—RL—
—51—	Contour	—51—
x 51.2	Spot Grade	51x2
	Tree Line	

CITY OF BEVERLY
PLANNING BOARD

DATE:

No.	Date	Description
3	3/28/19	REMOVE DETENTION FIELD; ADD RAIN GARDEN; ADD DRYWELLS.
2	12/27/18	REVISE DETENTION FIELD & OVERFLOW DRAIN.
1	12/17/18	REVISE DETENTION FIELD & STRUCTURES; ADD OVERFLOW PIPE.

Revisions

ROBERT H. GRIFFIN CIVIL #36686 COMMONWEALTH OF MASSACHUSETTS PROFESSIONAL ENGINEER

3-28-19

Griffin Engineering Group, LLC

495 Cabot Street, 2nd Floor
Beverly, MA 01915

Tel: 978-927-5111
Fax: 978-927-5103

LIVINGSTONE AVENUE IMPROVEMENTS
BEVERLY, MA

UTILITIES PLAN

Scale: 1"=20'
Job No.: 1754
File Name: p/p/b/m
Date: 3/23/18

C-4

GENERAL NOTES

1. THE LOCATIONS AND ELEVATIONS OF ALL EXISTING UTILITIES SHALL BE CONSIDERED APPROXIMATE AND MUST BE VERIFIED BY THE CONTRACTOR PRIOR TO ANY CONSTRUCTION. ANY DISCREPANCIES IN THE LOCATION OF ANY UTILITIES SHOWN OR ENCOUNTERED DURING CONSTRUCTION SHALL BE REPORTED TO THE ENGINEER.

2. THE CONTRACTOR SHALL CALL DIG-SAFE 72 HOURS PRIOR TO CONSTRUCTION TO INFORM UTILITY COMPANIES OF ANY EXCAVATION ADJACENT TO EXISTING UTILITIES.

3. THE CONTRACTOR SHALL NOTIFY THE OWNER, UTILITY COMPANIES, POLICE, FIRE AND DPW PRIOR TO ANY BLASTING.

4. WHENEVER EXISTING STRUCTURES ARE ENCOUNTERED, THE CONTRACTOR SHALL REPAIR ANY DAMAGED STRUCTURES OR REPLACE ANY REMOVED STRUCTURES, AND MAKE ANY IMPROVEMENTS ABOVE OR BELOW GRADE TO A CONDITION BETTER THAN OR EQUAL TO EXISTING CONDITIONS.

5. THE CONTRACTOR SHALL BE RESPONSIBLE FOR DISPOSAL OF ALL WASTE MATERIAL AT AN APPROVED SITE. BURIAL OF WASTE MATERIAL ON-SITE IS NOT PERMITTED.

6. THE CONTRACTOR SHALL PROTECT ADJACENT PROPERTIES FROM ON-SITE CONSTRUCTION ACTIVITIES AND REMOVE ANY SEDIMENT OR DEBRIS DEPOSITED THEREON IMMEDIATELY.

7. DRAINAGE GENERATED AS A RESULT OF DEWATERING SHALL BE DISCHARGED TO EXISTING DRAINAGE COURSES WITH PROPER FILTRATION AND EROSION CONTROL MEASURES. DISCHARGE ONTO PAVEMENT OR PRIVATE PROPERTY SHALL NOT BE ALLOWED.

8. IF ANY PART OF THIS DESIGN IS TO BE ALTERED IN ANY WAY, THE ENGINEER AS WELL AS THE APPROVING AUTHORITIES SHALL BE NOTIFIED IN WRITING BEFORE CONSTRUCTION.

9. ONLY THOSE PLANS APPROVED BY THE CITY OF BEVERLY ARE TO BE USED FOR CONSTRUCTION.

10. GRANULAR FILL SHALL BE NON-PLASTIC, WITH LESS THAN 10% PASSING #200 SIEVE.

11. UNLESS OTHERWISE NOTED, COMPACT ALL LAYERS TO 95% MODIFIED PROCTOR.

12. ALL WATER, SEWER, AND DRAINAGE WORK SHALL COMPLY WITH THE CITY OF BEVERLY REQUIREMENTS. ALL WORK WITHIN 10' OF THE PROPOSED RESIDENCE TO CONFORM TO MASSACHUSETTS BUILDING CODE, AND ANY LOCAL BOARD OF HEALTH SUPPLEMENTARY REGULATIONS.

13. BUILDING WATER SERVICES TO BE SIZED BY FIRE SUPPRESSION SYSTEM DESIGNER.

14. THE CONTRACTOR SHALL BE RESPONSIBLE FOR HORIZONTAL AND VERTICAL CONTROL OF ALL SYSTEM COMPONENTS.

15. SAFETY MEASURES, DAY-TO-DAY CONTROL OF WORK AND CONSTRUCTION METHODS SHALL BE THE SOLE RESPONSIBILITY OF THE CONTRACTOR.

16. PLACE 4" LOAM AND SUNNY LAWN SEED MIXTURE (200 LB/ACRE), STARTER FERTILIZER, LIME AS REQUIRED, AND EROSION CONTROL BLANKET, WHERE NECESSARY, OVER ALL DISTURBED AREAS.

17. IN CASES WHERE LEDGE OR BOULDERS ARE PRESENT, THE ENGINEER WILL NOT BE RESPONSIBLE FOR ASSURING THE AMOUNT OF ROCK TO BE ENCOUNTERED.

18. CONTRACTOR TO PROVIDE INDIVIDUAL WATER, SEWER, GAS, ELECTRICAL, TELEPHONE, AND CABLE BUILDING SERVICES TO LOT LINE DURING THE CONSTRUCTION OF THE ROADWAY.

19. PROPOSED RESIDENCES, CLEARING LIMITS, ON-LOT UTILITIES AND GRADING ARE SHOWN FOR CONCEPTUAL PURPOSES ONLY.

20. PRIOR TO SITE WORK START-UP/DEMOLITION AND DURING SITE CONSTRUCTION, THE CONTRACTOR SHALL EMPLOY A LICENSED PEST CONTROL FIRM FOR SITE EVALUATION AND SERVICES. A COPY OF THE SERVICE PROGRAM IS TO BE SENT TO THE CITY OF BEVERLY HEALTH DEPARTMENT.

21. MAINTAIN ACCESS FROM WAY TO ABUTTING PROPERTIES THROUGHOUT THE WORK.

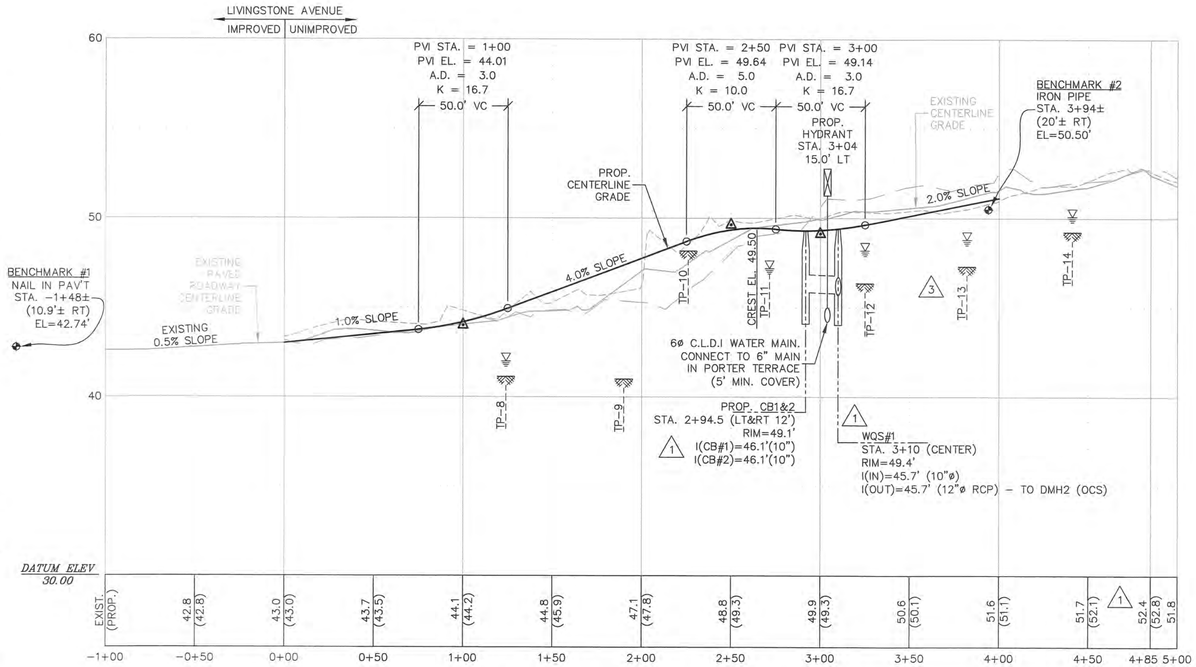

ROAD CENTERLINE PROFILE

SCALE: HORIZONTAL - 1"=40'
VERTICAL - 1" = 4'

PROFILE NOTES:

1) ALL CATCHBASINS, DRAIN, & SEWER MANHOLES TO BE PRECAST CONCRETE WITH FLAT TOPS.

2) ALL CATCHBASINS TO HAVE 4' (MIN.) DEEP SUMP WITH A HOOD ON THE OUTLET PIPE.

3) REFER TO UTILITIES SITE PLAN FOR INDIVIDUAL LOT WATER & SEWER SERVICE CONNECTION LOCATIONS. WATER & SEWER SERVICE CONNECTIONS TO HAVE MINIMUM 10' HORIZONTAL SEPARATION.

4) PROPOSED GAS, ELECTRIC, TELEPHONE, & CABLE SERVICE NOT SHOWN ON PROFILE. SAID UTILITIES SIZE AND LOCATION PER SERVICE PROVIDER.

LEGEND

- EXISTING GRADE
- EXISTING GRADE 12' LEFT
- EXISTING GRADE 12' RIGHT
- PROPOSED CENTERLINE
- PROP. WATER LINE
- PROP. SEWER LINE
- PROP. DRAINAGE LINE
- ESHWT ELEVATION IN TEST PIT
- APPROX. LEDGE ELEVATION IN TEST PIT
- TEST PIT NUMBER — TP-14

NOTE: SEE SHEET C-3 FOR SOIL LOGS.

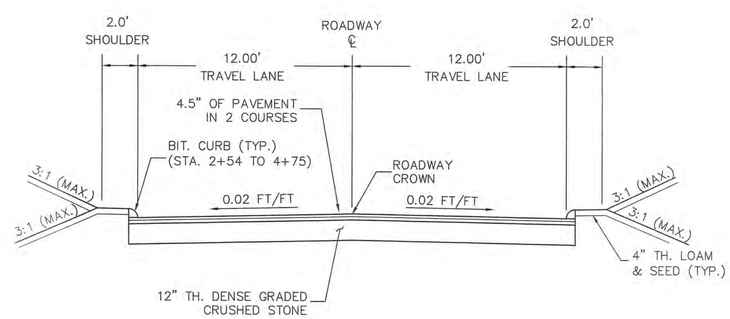

TYPICAL ROADWAY SECTION

SCALE: 1"=4'

KEY:

1. 1½" CLASS 1 BIT. CONCRETE TOP COURSE TYPE I-1 (M3.11.0 - TABLE A).
2. 3" CLASS 1 BIT. CONCRETE BINDER COURSE (M3.11.0 - TABLE A).
3. 12" DENSE GRADED CRUSHED STONE FOR SUB-BASE (M2.01.7)
4. PREPARED SUBGRADE.

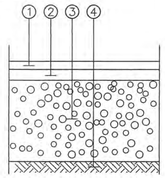

FULL DEPTH PAVEMENT

N.T.S.

NOTES:

1. REMOVE ALL LOAM, ROOTS, SUBSOIL AND DELETERIOUS MATERIALS.
2. COMPACT ALL LAYERS, AND SUBGRADE, TO 95% MOD. PROCTOR.
3. MATERIAL REFERENCES ARE TO 1995 EDITION OF MASS. HIGHWAY STANDARD SPECIFICATIONS FOR HIGHWAYS AND BRIDGES.
4. 4" LOAM, SEED AND MULCH ALL DISTURBED AREAS.
   LOAM = M 1.05.0
   SEED = M 6.03.0 SLOPE MIX
   MULCH = M 6.04.0 ANY TYPE
5. IN LEDGE, REMOVE LEDGE TO MIN. DEPTH OF 24" BELOW FINISH GRADE; BACKFILL WITH COMPACTED GRAVEL.

I CERTIFY THAT THIS PLAN WAS PREPARED IN ACCORDANCE WITH THE RULES AND REGULATIONS OF THE REGISTERS OF DEEDS.

_____ DATE

FOR REGISTRY USE ONLY

I, _____, CLERK OF THE CITY OF BEVERLY, MA, CERTIFY THAT THE NOTICE OF APPROVAL OF THIS PLAN BY THE BEVERLY PLANNING BOARD HAS BEEN RECEIVED AND RECORDED IN THIS OFFICE AND THAT NO APPEAL WAS RECEIVED DURING THE TWENTY (20) DAYS NEXT AFTER SUCH RECEIPT AND RECORDING OF SUCH NOTICE.

_____ BEVERLY CITY CLERK

_____ DATE

CITY OF BEVERLY PLANNING BOARD

DATE:

No.	Date	Description
3	3/28/19	REMOVE DETENTION FIELD; REDUCE IMPROVED ROADWAY LENGTH.
2	12/27/18	REVISE DETENTION FIELD.
1	12/17/18	REVISE STRUCTURES; ADD DETENTION FIELD.

Revisions

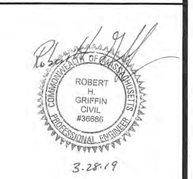

Griffin Engineering Group, LLC

495 Cabot Street, 2nd Floor
Beverly, MA 01915

Tel: 978-927-5111
Fax: 978-927-5103

LIVINGSTONE AVENUE IMPROVEMENTS BEVERLY, MA

GENERAL NOTES, PROFILE & SECTION

Scale: AS SHOWN
Job No.: 1754
File Name: p/p/b/m
Date: 3/23/18

C-5

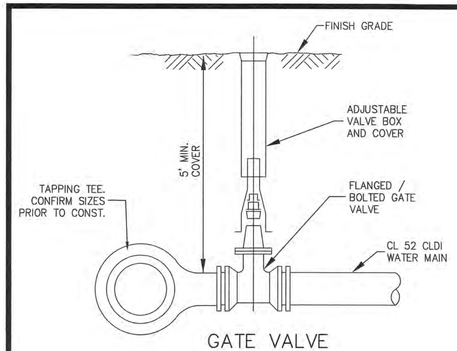

GATE VALVE

N.T.S.

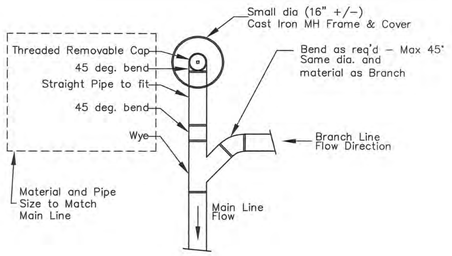

Plan

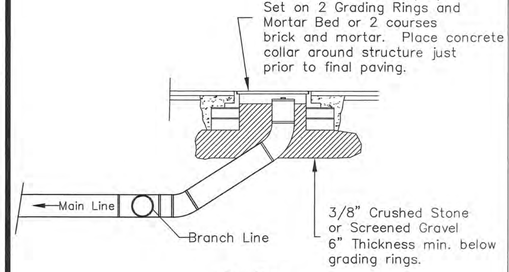

Section

SEWER CLEANOUT (TYP.)

SCALE: N.T.S.

I CERTIFY THAT THIS PLAN WAS PREPARED IN ACCORDANCE WITH THE RULES AND REGULATIONS OF THE REGISTERS OF DEEDS.

DATE

FOR REGISTRY USE ONLY

I, _____, CLERK OF THE CITY OF BEVERLY, MA, CERTIFY THAT THE NOTICE OF APPROVAL OF THIS PLAN BY THE BEVERLY PLANNING BOARD HAS BEEN RECEIVED AND RECORDED IN THIS OFFICE AND THAT NO APPEAL WAS RECEIVED DURING THE TWENTY (20) DAYS NEXT AFTER SUCH RECEIPT AND RECORDING OF SUCH NOTICE.

BEVERLY CITY CLERK DATE

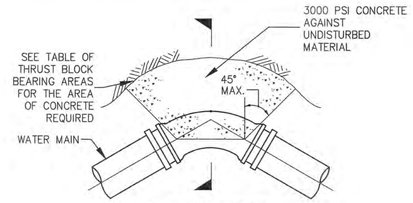

PLAN OF THRUST BLOCK AT BEND

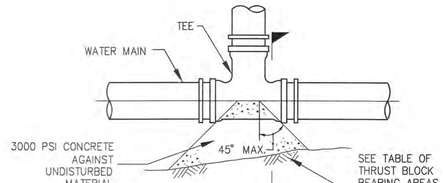

PLAN OF THRUST BLOCK AT TEE

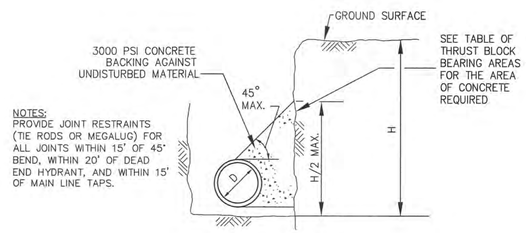

NOTES:
PROVIDE JOINT RESTRAINTS (TIE RODS OR MEGALUG) FOR ALL JOINTS WITHIN 15' OF 45° BEND, WITHIN 20' OF DEAD END HYDRANT, AND WITHIN 15' OF MAIN LINE TAPS.

THRUST BLOCK SECTION

CONCRETE THRUST BLOCK

N.T.S.

TABLE OF MINIMUM BEARING AREAS IN SQ. FT. AGAINST UNDISTURBED MATERIAL

PIPE SIZE	BEND	PRESSURE 150 PSI						
		TYPE OF SOIL CONDITION						
		A	B	C	D	E	F	G
6" and smaller	TEES & PLUGS	8.5	4.5	3	2.5	1.5	1.5	1
	90	12	6	4	3	2	1.5	1.5
	45	6.5	3.5	2.5	2	1.5	1	1
	22 1/2	3.5	2	1.5	1	1	0.5	0.5
8"	TEES & PLUGS	15.5	8	5.5	4	3	2	1.5
	90	21.5	11	7.5	5.5	4	3	2.5
	45	12	6	4	3	2	1.5	1.5
	22 1/2	6	3	2	1.5	1	1	1

TYPE OF SOIL CONDITION

A – SOFT CLAY; FINE LOOSE SAND
B – SAND & CLAY; MIXED OR IN LAYERS; FINE CONFINED SAND
C – HARD DRY CLAY
D – COARSE SAND
E – GRAVEL
F – SOFT ROCK
G – HARD PAN

NOTES:
1. FOR FITTINGS WITH LESS THAN 22 1/2° DEFLECTION USE BEARING AREAS FOR 22 1/2° BEND.
2. JOINTS SHALL NOT BE ENCASED IN CONCRETE. BEARING AREAS MAY BE DISREGARDED FOR TRENCHES IN ROCK WHERE THE TOP OF THE ROCK FACE IS AT OR ABOVE THE CROWN OF THE PIPE. HOWEVER, CONCRETE BACKING SHALL BE PLACED BETWEEN THE PIPE AND ROCK FACE.

CONCRETE THRUST BLOCK BEARING AREA

N.T.S.

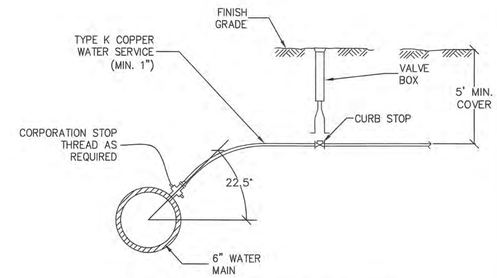

WATER SERVICE CONNECTION

N.T.S.

NOTES:
ALL CONNECTIONS PER CITY OF BEVERLY REQUIREMENTS.

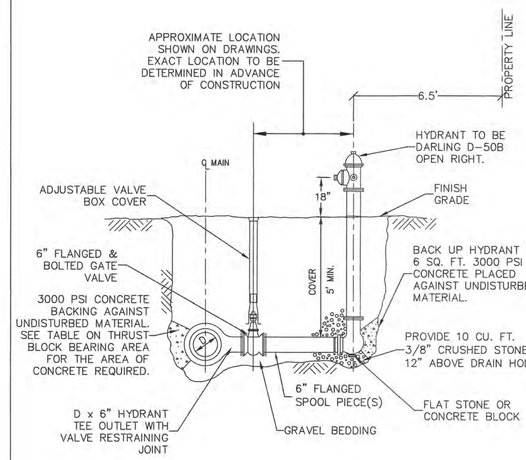

TYPICAL HYDRANT ASSEMBLY

N.T.S.

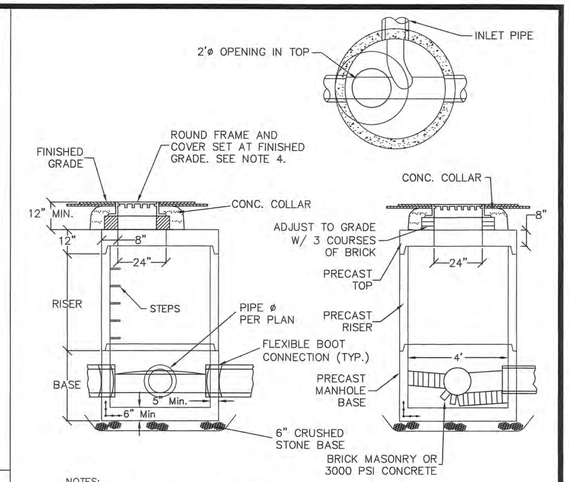

NOTES:
1. CONCRETE 4,000 PSI MINIMUM AFTER 28 DAYS.
2. REINFORCED STEEL SHALL CONFORM TO LATEST ASTM A185 SPEC. 0.12 SQ. IN./LINEAL FT. AND 0.12 SQ. IN. (BOTH WAYS) BASE BOTTOM.
3. H-20 DESIGN LOADING.
4. LEBARON FRAME AND COVER CATALOG NO. LA246 OR APPROVED EQUIVALENT.
5. SHEA PRECAST OR APPROVED EQUIVALENT.
6. TONGUE & GROOVE JOINTS SEALED WITH BUTYL RESIN. BUTYL RESIN.
7. COVER TO BE MARKED "SEWER"

4'ø PRECAST SEWER MANHOLE

N.T.S.

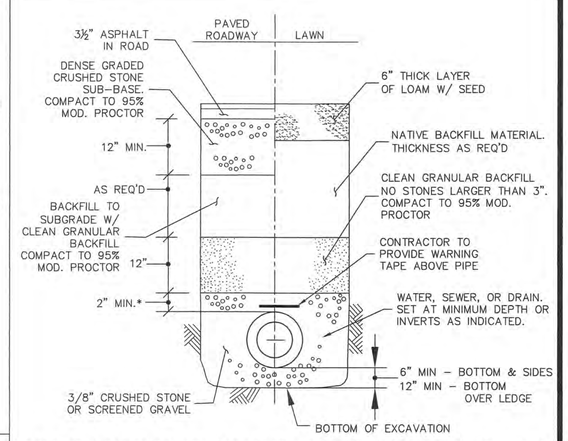

* FOR DUCTILE IRON OR RCP PIPE: TOP OF STONE IS MID-DEPTH (SPRING LINE) OF CONDUIT.

TYPICAL PIPE BEDDING SECTION

N.T.S.

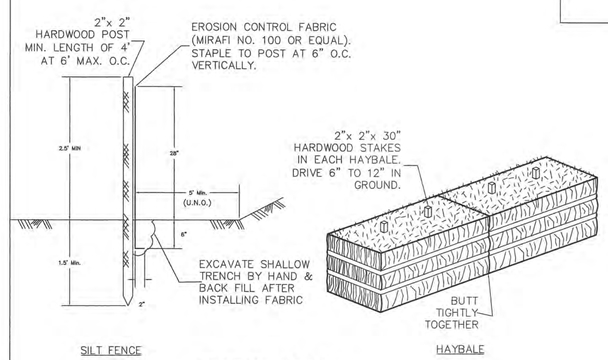

SILT FENCE HAYBALE

EROSION CONTROL

N.T.S.

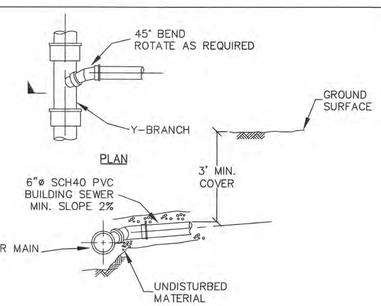

PLAN

SECTION

BUILDING CONNECTION

N.T.S.

CITY OF BEVERLY PLANNING BOARD

DATE:

No.	Date	Description

Revisions

ROBERT H. GRIFFIN CIVIL #36888 PROFESSIONAL ENGINEER
3.28.19

Griffin Engineering Group, LLC
495 Cabot Street, 2nd Floor
Beverly, MA 01915
Tel: 978-927-5111
Fax: 978-927-5103

LIVINGSTONE AVENUE IMPROVEMENTS BEVERLY, MA

DETAILS I

Scale: AS SHOWN
Job No.: 1754
File Name: p/p/b/m
Date: 3/23/18

C-6

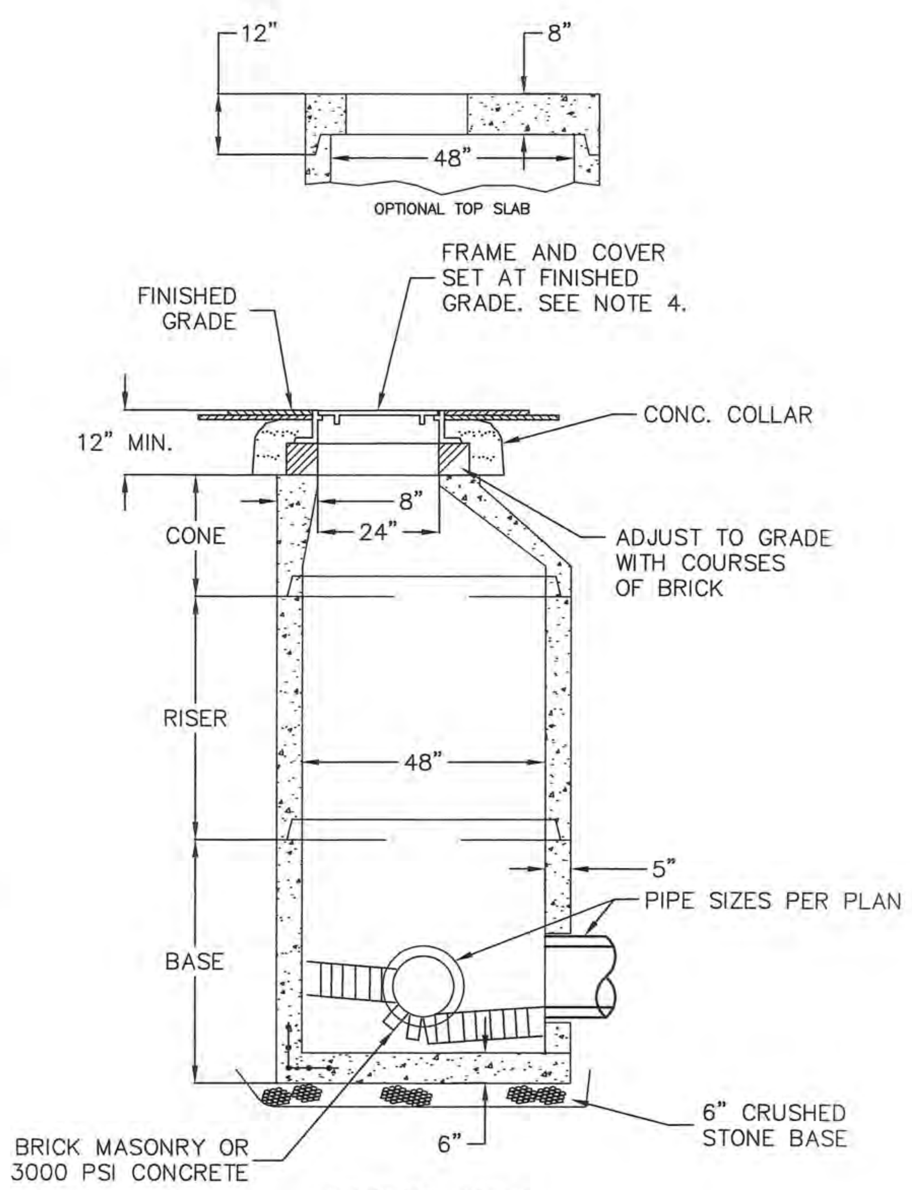

SECTION VIEW

NOTES:
1. CONCRETE 4,000 PSI MINIMUM AFTER 28 DAYS.
2. REINFORCED STEEL SHALL CONFORM TO LATEST ASTM A185 SPEC. 0.12 SQ. IN./LINEAL FT. AND 0.12 SQ. IN. (BOTH WAYS) BASE BOTTOM.
3. H-20 DESIGN LOADING.
4. EJCO 0MA124000023 FRAME & SOLID COVER 0MA124000026 (MARKED DRAIN) OR APPROVED EQUIVALENT.
5. SHEA PRECAST OR APPROVED EQUIVALENT.
6. TONGUE & GROOVE JOINTS SEALED WITH BUTYL RESIN. BUTYL RESIN.

PRECAST DRAIN MANHOLE

N.T.S.

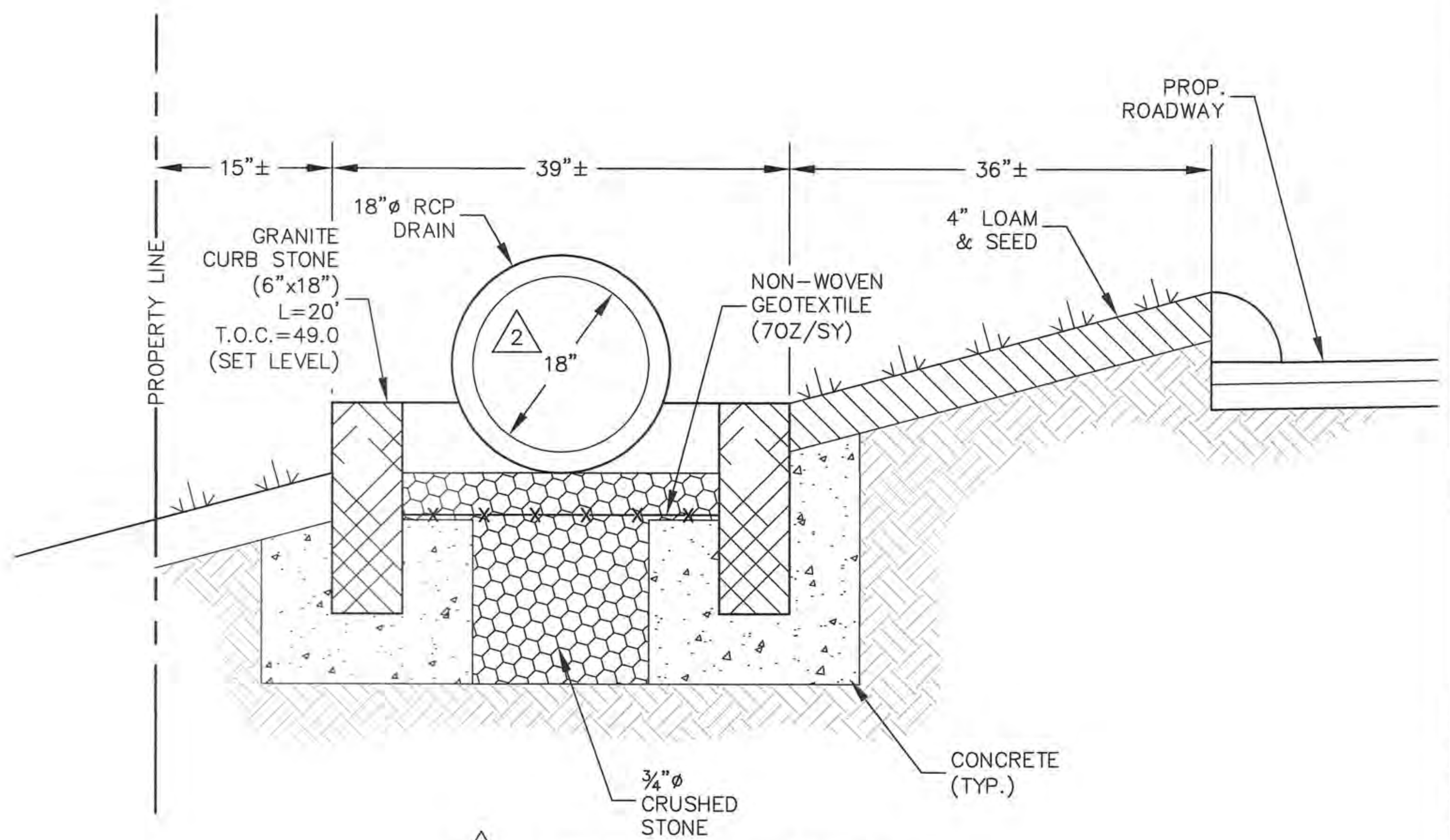

△2 LEVEL SPREADER

N.T.S.

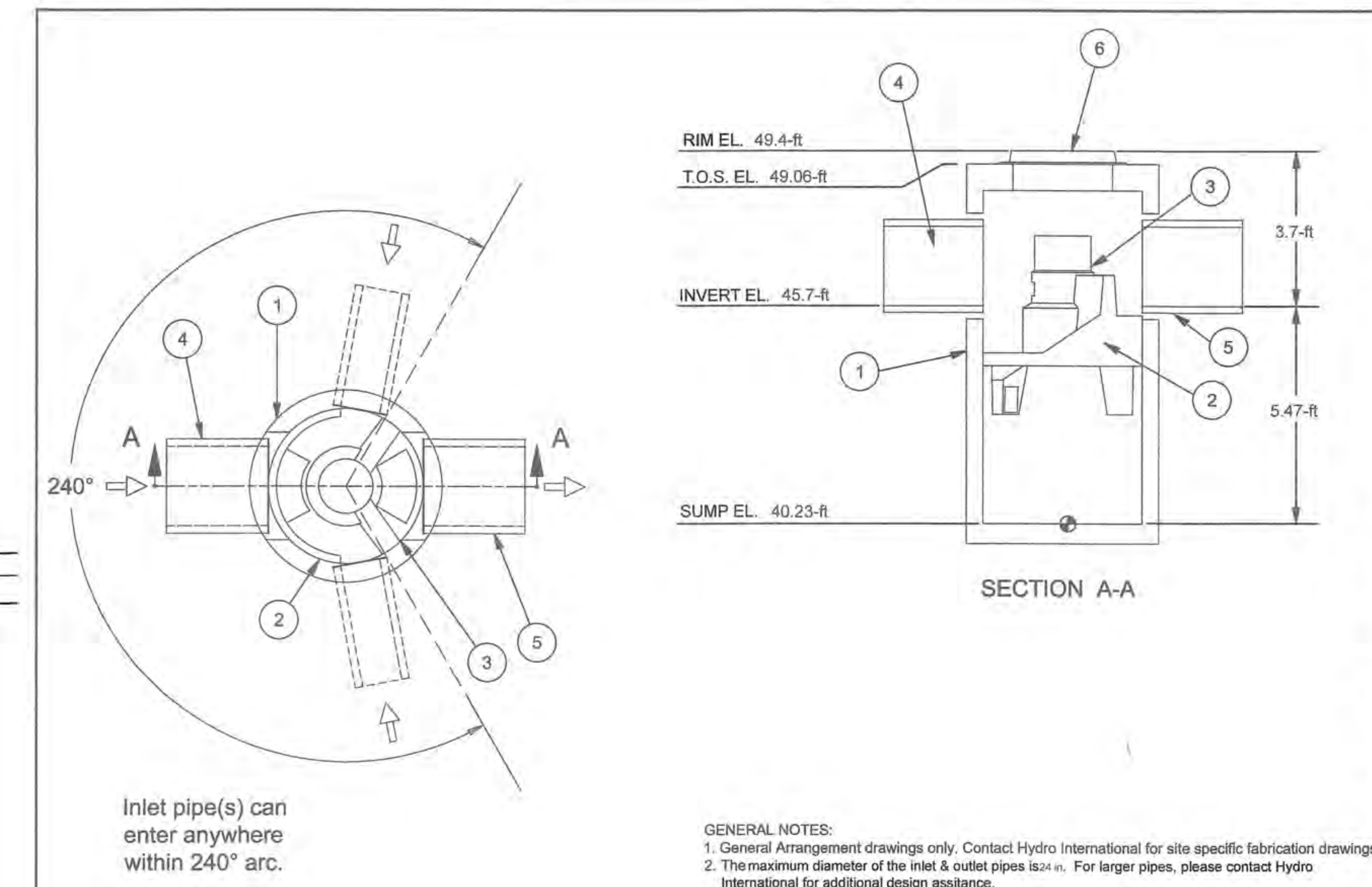

ITEM	SIZE (in)	DESCRIPTION
		Parts List
1	48	I.D. PRECAST MANHOLE
2		LEDGER SUPPORT
3		SEPARATION MODULE
4	10	INLET PIPE (BY OTHERS), MAX. 24 in.
5	12	OUTLET PIPE (BY OTHERS), MAX. 24 in.
6	30	FRAME AND COVER (ROUND)

©2014 Hydro International

Any warranty made by Hydro International only applies to those items supplied by it. Hydro International does not accept and expressly disclaims any responsibility or liability for any structure, plant or equipment (or the performance thereof) designed, built, manufactured or supplied by any third-party. Hydro International has a policy of continuous product development and reserves the right to amend the specifications of any of its products or equipment at any time. Hydro International expressly disclaims any liability for the performance of its equipment (or any part thereof) used or made subject to conditions outside of the conditions set forth in Hydro International's design specifications. Hydro International owns the copyright in and to this drawing, which is supplied in confidence, and all intended recipients of the drawing, by their use thereof, agree to hold the drawing in confidence and not to use it for any purpose other than for which it was supplied and not reproduce, in whole or in part, the drawing or any of the equipment or structures depicted therein, without prior written permission of Hydro International.

GENERAL NOTES:
1. General Arrangement drawings only. Contact Hydro International for site specific fabrication drawings.
2. The maximum diameter of the inlet & outlet pipes is 24 in. For larger pipes, please contact Hydro International for additional design assitance.
3. Multiple inlet pipes possible (refer to project plans).
4. Inlet/outlet pipe angle can vary to align with drainage network (refer to project plans).
5. Peak flow rate limited by available cover and pipe diameter.
6. Larger sediment storage capacity may be provided with a deeper sump depth.

PRODUCT SPECIFICATIONS:
A. The treatment system shall use an induced vortex to separate pollutants from stormwater runoff.
B. The treatment system shall fit within the limits of excavation (area and depth) as shown in the project plans and will not exceed the dimensions for the design flow rates specified herein.
C. The treatment system shall remove greater than or equal to 80% of TSS at the water quality flow rate.
D. The treatment system shall convey the Peak On-line Flow Rates of up to 7.89 cfs without causing upstream surcharge conditions. Full-scale independent laboratory scour testing shall demonstrate effluent control of less than or equal to 5 mg/L for all flows up to 200% of the maximum treatment flow rate for 106-micron particles.
E. The treatment system shall be capable of capturing and retaining fine silt and sand size particles. Analysis of captured sediment from full-scale field installations shall demonstrate particle sizes predominately in the 20-micron range

Notes
1. MANHOLE WALL AND SLAB THICKNESSES ARE NOT TO SCALE.
2. CONTACT HYDRO INTERNATIONAL FOR A BOTTOM OF STRUCTURE ELEVATION PRIOR TO SETTING FIRST DEFENSE MANHOLE.
3. CONTRACTOR TO CONFIRM RIM, PIPE INVERTS, PIPE DIA. AND PIPE ORIENTATION PRIOR TO RELEASE OF UNIT TO FABRICATION.

REV	BY	DATE	DESCRIPTION
	RC	12/5/2014	FIRST ISSUE

REVISION HISTORY

Date	Scale	
03/22/2018	1/4" = 1'0"	
Drawn RC	Checked	Approved

FIRST DEFENSE® MODEL 4-HC ONLINE

BEVERLY

PROJECT NAME:
1

PROJECT LOCATION:
Beverly, MA

Hydro International

Stormwater Solutions
94 Hutchins Drive
Portland, Maine 04102
Tel: (207) 756-6200
Fax: (207) 756-6212
stormwaterinquiry@hydro-int.com

CAD Ref: WEB SC FD-4HC
Project No. xx-xxxx
Drawing No. Rev. A

WATER QUALITY STRUCTURE (WQS#1)

N.T.S.

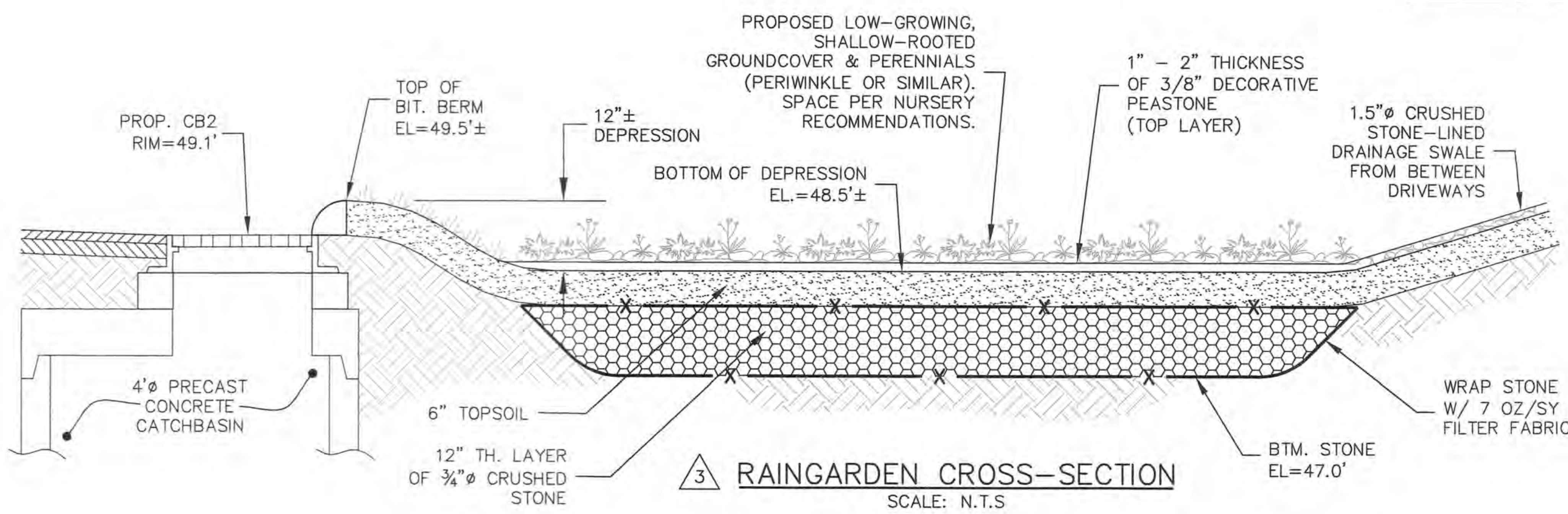

△3 RAINGARDEN CROSS-SECTION

SCALE: N.T.S

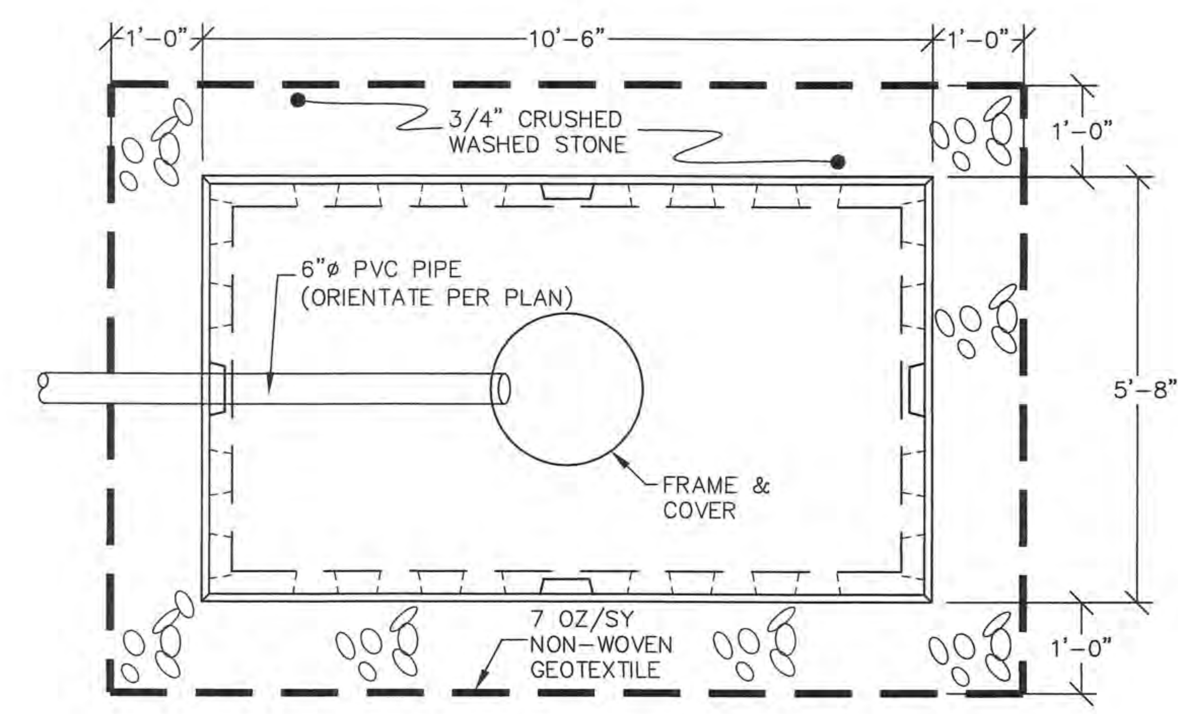

PLAN VIEW

I CERTIFY THAT THIS PLAN WAS PREPARED IN ACCORDANCE WITH THE RULES AND REGULATIONS OF THE REGISTERS OF DEEDS.

DATE

FOR REGISTRY USE ONLY

I, ________________, CLERK OF THE CITY OF BEVERLY, MA, CERTIFY THAT THE NOTICE OF APPROVAL OF THIS PLAN BY THE BEVERLY PLANNING BOARD HAS BEEN RECEIVED AND RECORDED IN THIS OFFICE AND THAT NO APPEAL WAS RECEIVED DURING THE TWENTY (20) DAYS NEXT AFTER SUCH RECEIPT AND RECORDING OF SUCH NOTICE.

BEVERLY CITY CLERK DATE

△1

JAPANESE KNOTWEED MANAGEMENT PLAN

STEP 1: CUTTING IN PREPARATION FOR SPRAYING.
IN JUNE, WHEN THE KNOTWEED HAS GROWN 3-4 FEET TALL, CUT IT DOWN AND REMOVE CUTTINGS (BAG & DISPOSE). THE PLANT WILL REGROW TO 3-4 FEET BY LATE AUGUST, THE MOST ADVANTAGOUS TIME TO SPRAY. THE RE-SPROUTED KNOTWEED WILL BE SMALLER, EASIER TO SPRAY, AND WILL REQUIRE LESS CHEMICALS TO ERADICATE.

STEP 2: CHEMICAL SPRAYING
BETWEEN AUGUST 15 AND SEPTEMBER 15, SPRAY WITH GLYPHOSATE (RODEO). THE TIMING IS IMPORTANT BECAUSE THE PLANT IS MOVING MATERIALS FROM THE LEAVES TO THE ROOT. THIS STEP MUST BE DONE BY A LICENSED PROFESSIONAL, PROPERLY TRAINED AND EXPERIENCED IN HERBICIDE APPLICATION.

STEP 3: FOLLOW-UP TREATMENT
RE-TREATMENT WITH CHEMICAL SPRAY WILL BE NECESSARY IN LATE SUMMER FOR THE FOLLOWING TWO YEARS. BY THE FOURTH YEAR, PERIODIC MONITORING AND ERACIATION OF YOUNG PLANTS CAN BE DONE BY HAND PULLING/DIGGING.

STEP 4: REVEGETATION
AT THE END OF THE FIRST GROWING SEASON FOLLOWING THE INITIAL CHEMICAL TREATMENT, REPLANTING OF THE AREA CAN BE DONE. SPREAD A THIN LAYER OF CLEAN LOAM THROUGHOUT THE AREA. THE FOLLOWING PLANTS ARE TO BE INSTALLED EVENLY THROUGHOUT THE AREA:
- EIGHT (5) ELDERBERRY SHRUBS
- EIGHT (5) SWEET PEPPERBUSH SHRUBS

THE ENTIRE AREA IS TO BE RESEEDED WITH NEW ENGLAND EROSION CONTROL/RESTORATION MIX FOR MOIST SITES. APPLY PER MANUFACTURERS RECOMENDATIONS.

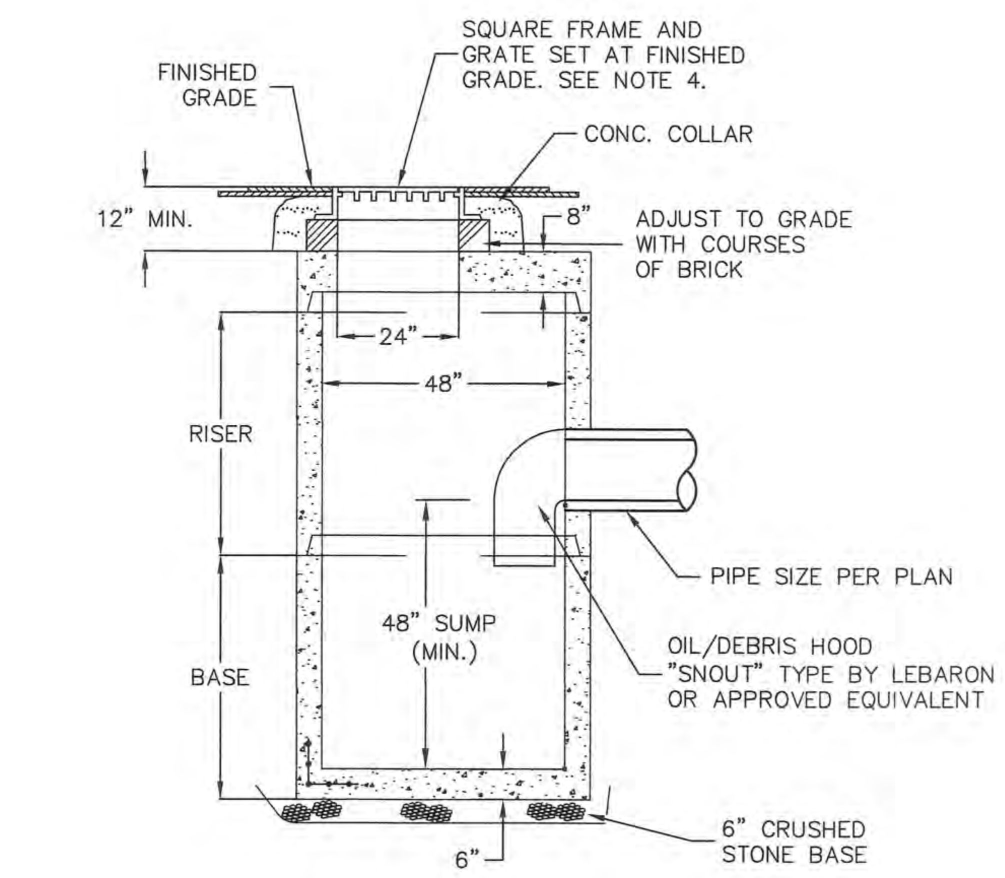

SECTION VIEW

NOTES:
1. CONCRETE 4,000 PSI MINIMUM AFTER 28 DAYS.
2. REINFORCED STEEL SHALL CONFORM TO LATEST ASTM A185 SPEC. 0.12 SQ. IN./LINEAL FT. AND 0.12 SQ. IN. (BOTH WAYS) BASE BOTTOM.
3. H-20 DESIGN LOADING.
4. EJCO 0MA552000029 FOUR FLANGE OR APPROVED EQUIVALENT.
5. SHEA PRECAST OR APPROVED EQUIVALENT.
6. TONGUE & GROOVE JOINTS SEALED WITH BUTYL RESIN. BUTYL RESIN.
7. FOUNDATION SUPPORT PER GEOTECHNICAL ENGINEER.

4'ø PRECAST CATCH BASIN

N.T.S.

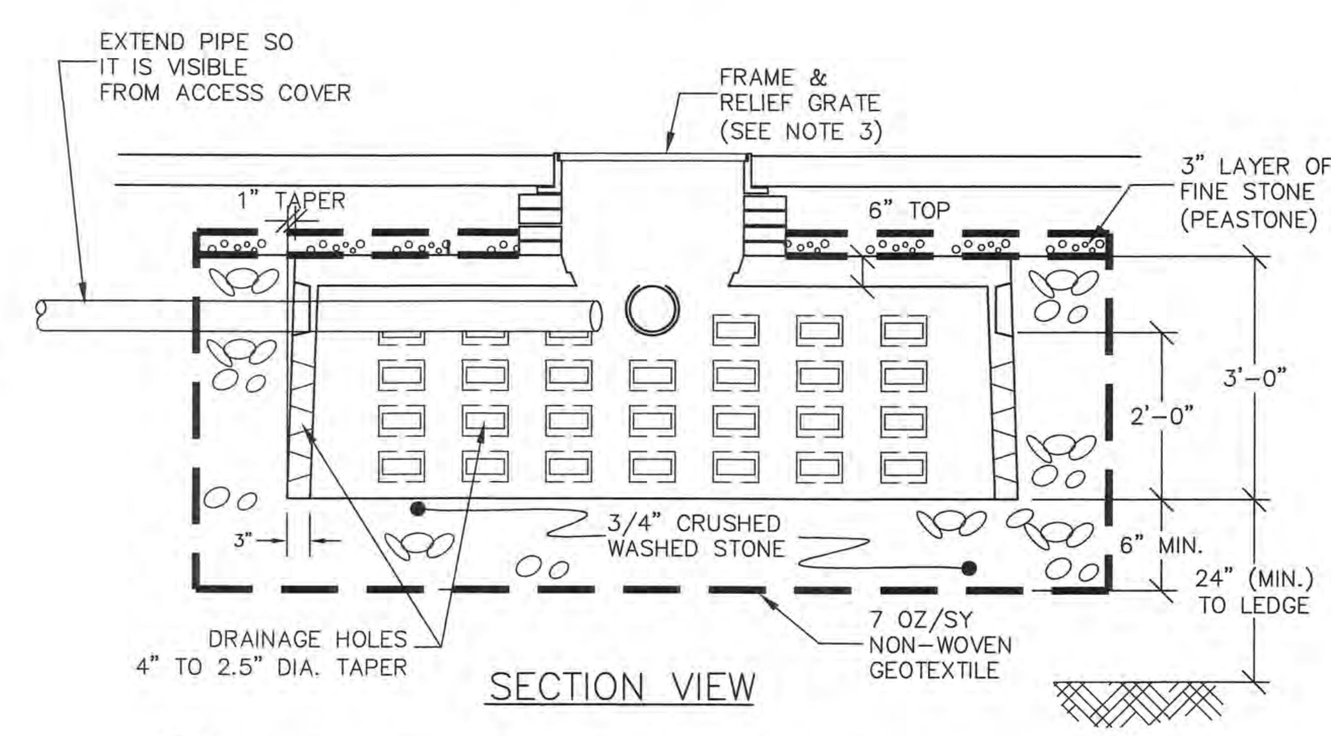

SECTION VIEW

NOTES:
1) 1,000 GALLON DRYWELL SHALLOW: SHEA DW-JDWH OR APPROVED ALTERNATE.
2) DRYWELLS TO BE H-20 RATED.
3) EJCO ROUND SOLID BASE FRAME & 20" GRATE.

△3 SHALLOW DRYWELL DETAIL

N.T.S

CITY OF BEVERLY PLANNING BOARD

DATE:

No.	Date	Description
3	3/28/19	REMOVE DET. FIELD; ADD DRYWELL DETAIL; ADD RAIN GARDEN DETAIL.
2	12/27/18	REVISE DET. FIELD, OCS, & LEVEL SPREADER.
1	12/17/18	REVISE DET. FIELD & OCS; REMOVE DRYWELL DETAIL; ADD LEVEL SREADER DETAIL; ADD KNOTWEED MANAGEMENT PLAN.

Revisions

COMMONWEALTH OF MASSACHUSETTS ROBERT H. GRIFFIN CIVIL #36686 PROFESSIONAL ENGINEER

3.28.19

Griffin Engineering Group, LLC

495 Cabot Street, 2nd Floor
Beverly, MA 01915

Tel: 978-927-5111
Fax: 978-927-5103

LIVINGSTONE AVENUE IMPROVEMENTS BEVERLY, MA

DETAILS II

Scale: AS SHOWN
Job No.: 1754
File Name: p/p/b/m
Date: 3/23/18

C-7