GENERAL NOTES

G1. THE INTENT OF THE STRUCTURAL DRAWINGS IS TO SHOW THE MAIN STRUCTURAL FEATURES AND DESIGN FOR THE COMPLETED PROJECT. ARCHITECTURAL DETAILS AND OTHER COMPONENTS THAT MAY BE NECESSARY TO CONSTRUCT THE PROJECT ARE SHOWN INCIDENTALLY ONLY AND NOT COMPLETELY. THEREFORE, ALL CONTRACT DRAWINGS AND SPECIFICATIONS MUST BE USED IN CONJUNCTION WITH THE STRUCTURAL DRAWINGS DURING ALL PHASES OF CONSTRUCTION. DISCREPANCIES BETWEEN STRUCTURAL DRAWINGS AND ARCHITECTURAL DRAWINGS, IF NOT CLARIFIED IN THE ADDENDA AT THE REQUEST OF THE CONTRACTOR, SHALL BE BROUGHT TO THE ATTENTION OF THE ARCHITECT DURING CONSTRUCTION FOR CLARIFICATIONS. THE CONTRACTOR SHALL TAKE THIS INTO CONSIDERATION IN HIS BID.

G2. THE CONTRACTOR SHALL INFORM THE ARCHITECT OF ALL DISCREPANCIES BETWEEN DRAWINGS OF DIFFERENT TRADES PRIOR TO INITIATION OF ANY WORK.

G3. THE DESIGN IS IN ACCORDANCE WITH THE EIGHTH EDITION OF THE MASSACHUSETTS STATE BUILDING CODE.

G4. THE CONTRACTOR SHALL BE COMPLETELY RESPONSIBLE FOR THE SAFETY OF ADJACENT STRUCTURES, PROPERTY, AND THE PUBLIC. THE CONTRACTOR SHALL SHORE, BRACE, AND PROTECT THE EXISTING BUILDING AS REQUIRED FOR CONSTRUCTION OF NEW WORK.

G.5 REFER TO ARCHITECTURAL, MECHANICAL, PLUMBING, AND ELECTRICAL DRAWINGS FOR VERIFICATION OF LOCATIONS AND DIMENSIONS OF ALL CHASES, SLOTS, INSERTS, CURBS, OPENINGS, SLEEVES, ANCHOR BOLTS, FLOOR PITCHES, ANGLE FRAMES, AND ALL OTHER PROJECT REQUIREMENTS NOT SHOWN ON STRUCTURAL DRAWINGS. WORK NOT INDICATED ON A PART OF THE DRAWINGS BUT REASONABLY IMPLIED TO BE SIMILAR TO THAT SHOWN AT CORRESPONDING LOCATIONS SHALL BE INCLUDED.

G6. DETAILS SHOWN AS TYPICAL ARE APPLICABLE TO ALL SIMILAR CONDITIONS.

G7. ALL CONTRACTORS ARE REQUIRED TO EXAMINE THE DRAWINGS AND SPECIFICATIONS CAREFULLY, VISIT THE SITE, AND FULLY INFORM THEMSELVES AS TO ALL EXISTING CONDITIONS AND LIMITATIONS, PRIOR TO SUBMITTING THE PROPOSAL. FAILURE TO VISIT THE SITE AND FAMILIARIZE THEMSELVES WITH THE EXISTING CONDITIONS AND LIMITATIONS WILL IN NO WAY RELIEVE THE SUCCESSFUL BIDDER FROM FURNISHING ANY MATERIALS OR PERFORMING ANY WORK IN ACCORDANCE WITH DRAWINGS AND SPECIFICATIONS WITHOUT ADDITIONAL COST TO THE OWNER.

G8. DIMENSIONS AND ELEVATIONS OF EXISTING STRUCTURE SHOWN ON STRUCTURAL DRAWINGS HAVE BEEN OBTAINED FROM EXISTING DRAWINGS. THE CONTRACTOR IS RESPONSIBLE FOR VERIFYING WITH FIELD MEASUREMENTS OF ALL DIMENSIONS AND ELEVATIONS WHICH ARE REQUIRED FOR FABRICATION AND INSTALLATION OF ADDITIONS TO EXISTING STRUCTURE THAT ARE BEING MADE UNDER THIS CONTRACT.

FOUNDATION NOTES

F1. THE FOUNDATION DESIGN IS BASED ON THE RECOMMENDATIONS PROVIDED IN THE GEOTECHNICAL ENGINEERING REPORT PREPARED BY LGCI, INC. JULY 9, 2015. REFER TO BORING LOGS AND TEST PIT DATA IN THE SPECIFICATIONS FOR ADDITIONAL INFORMATION.

F2. FOUNDATIONS ARE SUPPORTED ON HP10x57 STEEL PILES WITH A MINIMUM WORKING DESIGN CAPACITY OF 65 TONS.

F3. ALL BACKFILL UNDER STRUCTURAL SLABS, MATS, AND FOOTINGS WILL BE ENGINEERED STRUCTURAL FILL COMPACTED IN SPECIFIED LIFTS TO 95 PERCENT OF MAXIMUM DRY DENSITY, UNLESS OTHERWISE INDICATED OR SPECIFIED. REFER TO EARTHWORK SPECIFICATIONS FOR ADDITIONAL REQUIREMENTS.

F4. PROVIDE SHEETING, BRACING, AND UNDERPINNING AS REQUIRED TO PRESERVE ADJACENT STRUCTURES.

F.5 FOUNDATIONS AND SLABS SHALL NOT BE POURED IN WATER OR ON FROZEN GROUND.

F6. VERIFY LOCATIONS AND REQUIREMENTS FOR INSERTS, SLEEVES, CONDUITS, EMBEDMENTS, AND PENETRATIONS WITH RESPECTIVE TRADES BEFORE PLACING CONCRETE.

F7. BLASTING, IF REQUIRED, SHALL BE COMPLETED BEFORE ANY CONCRETE IS PLACED.

F8. DOWELS FROM FOUNDATIONS INTO PIERS, PILE CAPS, COLUMNS, BUTTRESSES, OR WALLS SHALL BE THE SAME SIZE AND NUMBER AS REINFORCEMENT IN PIERS, COLUMNS, BUTTRESSES, OR WALLS ABOVE, EXCEPT AS OTHERWISE SHOWN.

F9. CONTRACTOR SHALL PROVIDE CONTINUOUS DRAINAGE BY MECHANICAL METHODS TO CONTROL SURFACE AND UNDERGROUND WATER, AS REQUIRED DURING CONSTRUCTION. REFER TO EARTHWORK SPECIFICATIONS FOR ADDITIONAL REQUIREMENTS.

F10. CONTRACTOR SHALL ENSURE THAT GROUND WATER LEVELS UNDER ADJACENT STRUCTURES AND PROPERTIES ARE NOT ALTERED. REFER TO EARTHWORK SPECIFICATIONS FOR ADDITIONAL REQUIREMENTS.

F11. ALL FOUNDATIONS UNITS (PIERS AND PILECAPS) SHALL BE CENTERED UNDER SUPPORT MEMBERS, UNLESS NOTED OTHERWISE ON PLANS.

F12. COORDINATE UNDER FLOOR AND PERIMETER DRAIN REQUIREMENTS WITH ARCHITECTURAL, CIVIL, AND PLUMBING DRAWINGS.

F13. THE OWNER AND ENGINEER ASSUME NO RESPONSIBILITY FOR THE VALIDITY OF THE SUBSURFACE CONDITIONS DESCRIBED ON THE DRAWINGS, SPECIFICATIONS, BORING LOGS, OR TEST PITS. THIS DATA IS INCLUDED ONLY TO ASSIST THE CONTRACTOR DURING BIDDING AND SUBSEQUENT CONSTRUCTION AND REPRESENT CONDITIONS ONLY OF THOSE SPECIFIED LOCATIONS AT THE PARTICULAR TIME THEY WERE MADE.

F14. CONTRACTOR SHALL INFORM THE ARCHITECT AND RELOCATE ANY EXISTING UTILITY LINES AS REQUIRED THAT MAY INTERFERE WITH NEW FOUNDATIONS. CONTRACTOR SHALL REMOVE ANY EXISTING UTILITY LINES THAT ARE BEING ABANDONED IN THE VICINITY OF THE NEW FOUNDATION AND BACKFILL THE AREA WITH COMPACTED STRUCTURAL FILL.

F15. SEE THE PROJECT SPECIFICATIONS FOR ADDITIONAL INFORMATION AND OTHER SPECIFIC FOUNDATION CONSTRUCTION REQUIREMENTS.

REINFORCED CONCRETE NOTES

R1. ALL CONCRETE WORK SHALL CONFORM TO ACI-318-08 "BUILDING CODE REQUIREMENTS FOR STRUCTURAL CONCRETE" AND TO THE EIGHTH EDITION OF THE MASSACHUSETTS STATE BUILDING CODE IN CASE OF CONFLICT, THE MASSACHUSETTS STATE BUILDING CODE SHALL GOVERN.

R2. ALL CONCRETE SHALL BE CONTROLLED, MIXED, AND PLACED UNDER THE SUPERVISION OF AN APPROVED CONCRETE TESTING AGENCY, PROVIDED BY OWNER.

R3. ALL CONCRETE EXPOSED TO THE WEATHER SHALL BE NORMAL WEIGHT CONCRETE WITH A MINIMUM 5,000 PSI 28 DAY COMPRESSION STRENGTH AND CONTAIN AN AIR ENTRAINMENT ADMIXTURE.

R4. UNLESS OTHERWISE NOTED, ALL CONCRETE SHALL BE NORMAL WEIGHT AND HAVE A MINIMUM COMPRESSIVE STRENGTH OF 4,000 POUNDS PER SQUARE INCH AT THE END OF 28 DAYS. CONCRETE SLABS ON GRADE AND SUPPORTED CONCRETE SLABS SHALL BE NORMAL WEIGHT AND HAVE A MINIMUM COMPRESSIVE STRENGTH OF 4,000 POUNDS PER SQUARE INCH AT THE END OF 28 DAYS. CONCRETE SLABS ON STEEL DECK SHALL BE LIGHTWEIGHT CONCRETE WITH A MINIMUM COMPRESSIVE STRENGTH OF 4,000 PSI AT THE END OF 28 DAYS.

R.5 CONCRETE QUALITY IN ACCORDANCE WITH THE REQUIREMENTS OF THESE DRAWINGS AND SPECIFICATIONS IS ESSENTIAL TO THE STRUCTURAL PERFORMANCE OF THIS BUILDING. CONCRETE THAT IS NOT IN ACCORDANCE WITH THE DRAWINGS AND SPECIFICATIONS WILL NOT BE ACCEPTED.

R6. CONCRETE SHALL REACH THE 40 PERCENT OF ITS 28 DAY COMPRESSIVE STRENGTH (f'C) BEFORE FORMS OR SHORES FOR WALLS MAY BE REMOVED. NO FORMS CAN BE REMOVED UNLESS CONCRETE HAS ATTAINED SUFFICIENT STRENGTH TO SUPPORT ITS OWN WEIGHT.

R7. CONSTRUCTION JOINT LOCATIONS, OTHER THAN SHOWN ON THE DRAWINGS, ARE PERMITTED SUBJECT TO PRIOR APPROVAL OF THE ENGINEER. EXPANSION JOINT AND CONTROL JOINT LOCATIONS ARE MANDATORY,AS SHOWN.

R8. REINFORCING BARS SHALL CONFORM TO ASTM A615 WITH 60,000 POUNDS PER SQUARE INCH YIELD STRENGTH, AS INDICATED AND SHALL HAVE THE FOLLOWING CONCRETE COVER, UNLESS NOTED OTHERWISE ON THE DRAWINGS.

A. SURFACES PLACED IN CONTACT WITH THE GROUND - 3"
B. FORMED SURFACE EXPOSED TO GROUND - 2"
C. INSIDE FACE OF FORMED WALL - 1 1/2"
D. WALL PIER TIES - 1 1/2"
E. SLAB REINFORCING - 3/4" TOP & BOTTOM

R9. WELDED WIRE FABRIC SHALL CONFORM TO ASTM A185; LAP TWO SQUARES AT ALL SPLICES AND TIE AT 3 FOOT CENTERS.

R10. ALL LAP REINFORCING TO DEVELOP FULL TENSION CAPACITY OF THE SMALLER BAR REINFORCEMENT UNLESS OTHERWISE NOTED ON THE DRAWINGS.

R11. PROVIDE BAR SUPPORTS, SPACES, AND ACCESSORIES RECOMMENDED IN THE LATEST ADDITION OF THE ACI DETAILING MANUAL, PUBLICATION SP-66. ALL REINFORCEMENT DETAILING, LAP SPLICES, AND EMBEDMENTS SHALL CONFORM TO THIS MANUAL. ALL ACCESSORIES, SUCH AS SLAB BOLSTERS AND BEAM AND SLAB CHAIRS IN CONTACT WITH EXPOSED SURFACES, SHALL BE ZINC COATED OR PLASTIC TYPE.

R12. PIPES OR CONDUITS SHALL NOT BE PLACED IN SLABS ON GRADE OR ELEVATED SLABS.

R13. CONCRETE WALLS SHALL BE CAST IN PANELS NOT EXCEEDING 60 FEET IN LENGTH.

R14. DETAILING OF REINFORCEMENT SHALL BE ACCORDING TO THE LATEST EDITION OF ACI 315 "MANUAL OF STANDARD PRACTICE FOR DETAILING REINFORCED CONCRETE STRUCTURES".

R15. SET SECURELY AND TIE ALL REINFORCEMENT BEFORE PLACING CONCRETE. SETTING DOWELS AND REINFORCEMENT INTO WET CONCRETE IS PROHIBITED.

R16. ALL REINFORCING WILL BE CONTINUOUS THROUGH CONSTRUCTION JOINTS.

R17. FOR CONCRETE FILL AND TOPPINGS, PLACE CONSTRUCTION AND EXPANSION JOINTS AT THE SAME LOCATION AS THE CONSTRUCTION AND EXPANSION JOINTS IN THE SUPPORTING CONCRETE.

R18. BUILD ALL CONCRETE MAT FOUNDATIONS, BASE SLABS, WALLS, AND FLOORS TO MINIMIZE THE EFFECTS OF SHRINKAGE BY CASTING ALTERNATE SECTIONS. ADJACENT SECTIONS MAY BE CAST WHEN PREVIOUSLY PLACED SECTION HAS CURED FOR 48 HOURS AFTER ITS INITIAL SET. CURING REQUIREMENTS ARE SPECIFIED IN SECTION 03 30 00, CAST-IN-PLACE CONCRETE OF THE SPECIFICATIONS.

R19. EXPOSED EDGES OF CONCRETE ELEMENTS, SUCH AS PILASTERS, CURBS, AND EQUIPMENT PADS, WILL HAVE 1 INCH CHAMFER.

REINFORCED CONCRETE NOTES (CONTINUED)

R20. ALL KEYS SHALL BE 2"x4" (NOMINAL) UNLESS SHOWN OTHERWISE ON DRAWINGS.

R21. NOT ALL OPENINGS THROUGH CONCRETE SLABS AND WALLS ARE SHOWN ON STRUCTURAL DRAWINGS. OPENINGS INDICATED, OR ANY ADDITIONAL OPENINGS OR INSERTS REQUIRED, SHALL BE VERIFIED WITH RESPECTIVE TRADES BEFORE POURING OF CONCRETE.

R22. USE NON-SHRINK, NON-METALLIC GROUT WHERE INDICATED. SEE SECTION 03 30 00, CAST-IN-PLACE CONCRETE OF THE SPECIFICATIONS FOR ALL THE REQUIREMENTS.

R23. SEE ARCHITECTURAL DRAWINGS FOR FINISHES, DEPRESSIONS, REGLETS, NOTCHES, AND OTHER ARCHITECTURAL FEATURES.

R24. PROVIDE SEALANT JOINTS FOR ALL EXPOSED TO VIEW CONSTRUCTION JOINTS, CONTROL JOINTS, AND SHEAR KEYS.

R25. SET ANCHOR BOLTS AND EMBEDDED PLATES REQUIRED FOR CONNECTION OF WORK FURNISHED BY OTHER TRADES FOR INSTALLATION AS PART OF THEIR SCOPE OF WORK.

R26. PROVIDE A MINIMUM OF #4 AT 12 EACH WAY, EACH FACE FOR ALL WALLS, FOOTINGS, PITS, OR PADS, UNLESS NOTED OTHERWISE.

R27. PROVIDE CONCRETE PADS FOR MECHANICAL EQUIPMENT ACCORDING TO THE REQUIREMENTS OF THE MANUFACTURER AND IN ACCORDANCE WITH THE TYPICAL DETAILS. ALWAYS PROVIDE A MINIMUM REINFORCEMENT FOR PADS, UNLESS NOTED OTHERWISE. COORDINATE LOCATIONS WITH MECHANICAL WORK.

R28. PROVIDE CONDENSATE PITS AND OTHER DEPRESSIONS OR CURBS AS REQUIRED FOR COMPLETION OF THE MECHANICAL WORK.

R29. NO CONCRETE SHALL BE PLACED BEFORE REVIEW AND APPROVAL OF THE REINFORCING AND EMBEDDED ITEMS HAVE BEEN OBTAINED FROM THE ARCHITECT / ENGINEER.

R30. WHEN REINFORCEMENT IS PLACED IN TWO OR MORE LAYERS, BARS IN THE UPPER LAYERS SHALL BE PLACED DIRECTLY ABOVE THOSE IN THE BOTTOM LAYER WITH A CLEAR DISTANCE BETWEEN THE LAYERS NOT LESS THAN ONE INCH.

R31. FLOOR SLOPES WILL BE AN INTEGRAL PART OF STRUCTURAL SLABS. SEPARATE CONCRETE FILL IS NOT PERMITTED UNLESS SPECIFICALLY INDICATED ON THE STRUCTURAL DRAWINGS. CONCRETE CAST ON SLOPED SURFACES, SHALL BEGIN AT THE LOWEST ELEVATION AND CONTINUE MONOLITHICALLY TOWARD THE HIGHER ELEVATIONS UNTIL THE INTENDED POUR IS COMPLETED.

REINFORCED CONCRETE MASONRY

M1. ALL REINFORCED CONCRETE MASONRY SHALL CONFORM TO ACI 530 -08 " BUILDING CODE REQUIREMENTS FOR MASONRY STRUCTURES" AND ACI-530.1-08 "SPECIFICATION FOR MASONRY STRUCTURES" FOR THE DESIGN AND CONSTRUCTION OF LOAD-BEARING CONCRETE MASONRY AND TO THE EIGHTH EDITION OF THE MASSACHUSETTS STATE BUILDING CODE IN CASE OF CONFLICT, THE MASSACHUSETTS STATE BUILDING CODE SHALL GOVERN.

M2. CONCRETE MASONRY UNITS SHALL CONFORM TO ASTM C90, GRADE N, TYPE I, NORMAL WEIGHT WITH AN AVERAGE MINIMUM COMPRESSIVE STRENGTH OF 2,000 POUNDS PER SQUARE INCH ON THE NET AREA.

M3. MORTAR SHALL CONFORM TO ASTM C270, TYPE S, AND SHALL DEVELOP A COMPRESSIVE STRENGTH OF 1,800 POUNDS PER SQUARE INCH AT 28 DAYS.

M4. GROUT SHALL CONFORM TO ASTM C476, FINE TYPE, AND SHALL HAVE A MINIMUM 28 DAY COMPRESSIVE STRENGTH OF 2,500 POUNDS PER SQUARE INCH.

M5. ALL REINFORCING BARS SHALL CONFORM TO ASTM A615, GRADE 60 TYPICALLY. REINFORCING BARS BEING WELDED SHALL CONFORM TO A706, GRADE 60. DEFORMED HORIZONTAL TRUSS REINFORCING MATERIAL SHALL CONFORM TO ASTM A82 AND SHALL HAVE MINIMUM CROSS-SECTIONAL AREAS INDICATED ON PLANS OR IN SECTIONS.

M6. PROVIDE HORIZONTAL AND VERTICAL REINFORCING AS NOTED ON THE DRAWINGS AND FILL ALL REINFORCED BLOCK CELLS WITH GROUT.

M7. GROUTING SHALL BE LIMITED TO A MAXIMUM WALL HEIGHT OF 4 FEET PER LIFT.

M8. REINFORCE CMU AT ALL ELEVATORS, STAIRS, AND MEANS OF EGRESS AND EXTERIOR WALLS WITH A MINIMUM #7 @ 48" ON CENTER VERTICALLY.

M9. PROVIDE 48 DIAMETER LAPS FOR ALL REINFORCING UNLESS NOTED OTHERWISE.

STRUCTURAL STEEL NOTES

S1. ALL STEEL WORK SHALL CONFORM TO THE 2005 SPECIFICATIONS FOR STRUCTURAL STEEL BUILDINGS OF THE AMERICAN INSTITUTE OF STEEL CONSTRUCTION AND TO THE EIGHTH EDITION OF THE MASSACHUSETTS STATE BUILDING CODE IN CASE OF CONFLICT, THE MASSACHUSETTS STATE BUILDING CODE SHALL GOVERN.

S2. THE STRUCTURAL STEEL SHALL CONFORM TO THE FOLLOWING:

A. ALL STRUCTURAL WIDE FLANGE SHAPES: ASTM A992 FY = 50KSI, HAVING A MINIMUM YIELD STRENGTH OF 50 KSI, UNLESS OTHERWISE NOTED.
B. BARS, PLATES, CHANNELS, AND CONNECTION ANGLES: ASTM A36, UNLESS NOTED OTHERWISE.
C. STRUCTURAL TUBES: ASTM A500, GRADE B. FY = 46KSI.
D. STRUCTURAL PIPES: ASTM A53, GRADE B OR ASTM A501.
E. ALL ANCHOR BOLTS SHALL CONFORM TO ASTM F1554.

S3. ALL WELDING SHALL BE IN ACCORDANCE WITH THE AWS D1.1 STRUCTURAL WELDING CODE.

S4. BOTTOM OF DECK ELEVATIONS REFER TO TOP ELEVATION OF SUPPORTING ELEMENT INCLUDING JOISTS, BEAMS, PLATES, TEES, ANGLES, ETC.

S5. TOP-OF-STEEL ELEVATIONS INDICATED ON THE DRAWINGS REFER TO TOP OF TOP-BEAM FLANGE UNLESS NOTED OTHERWISE ON PLANS.

S6. DESIGN AND DETAIL OF ALL CONNECTIONS SHALL BE ACCORDING TO AISC.

S7. THE BEAM CONNECTION DESIGN SHOULD ACCOUNT FOR REACTIONS OF MEMBERS SUPPORTED BY THE BEAM NEAR SUPPORTS CONCENTRATED LOADS WITHIN ONE THIRD THE SPAN OF THE BEAM CLOSER TO THE SUPPORT AND/OR VERTICAL COMPONENTS OF FORCE IN DIAGONAL BRACING MEMBERS FRAMING INTO THE MEMBERS.

S8. ALL CONNECTIONS SHALL BE BOLTED WITH ASTM A325 HIGH-STRENGTH BOLTS OR WELDED IN ACCORDANCE TO AWS AND WITH THE AISC MANUAL REQUIREMENTS UNLESS NOTED OTHERWISE.

S9. ALL CONNECTIONS SHALL BE DOUBLE ANGLE CONNECTORS DESIGNED FOR A BEAM REACTION "R" DETERMINED BY THE MEMBER CAPACITY AS SPECIFIED BY AISC EXCEPT COMPOSITE STRUCTURAL STEEL BEAMS AND GIRDERS WHICH SHALL BE DESIGNED USING THE REACTION "R" MODIFIED BY THE MAGNIFICATION FACTOR AS FOLLOWS:

FOR STEEL SECTION DEPTH = "D"
"RC" = REQUIRED CONNECTION CAPACITY FOR COMPOSITE BEAMS.

- FOR "D" GREATER THAN OR EQUAL TO 24", RC = 1.5R
- FOR "D" GREATER THAN OR EQUAL TO 21", BUT LESS THAN 24", RC = 1.75R
- FOR "D" GREATER THAN OR EQUAL TO 14", BUT LESS THAN 21", RC = 2. OR
- FOR "D" LESS THAN 14" RC = 2.25R

ADD TO "R" OR "RC" THE LOADS OR REACTIONS OF MEMBERS SUPPORTED BY THE BEAM NEAR SUPPORTS AND/OR VERTICAL COMPONENTS OF FORCE IN DIAGONAL BRACING MEMBERS FRAMING INTO THE MEMBER.

S10. SHOP CONNECTIONS MAY BE BOLTED OR WELDED, UNLESS THE CONNECTION METHOD IS SPECIFICALLY INDICATED ON THE STRUCTURAL DRAWINGS.

S11. THE CONTRACTOR SHALL SUPPLY ALL PLATES, CLIPS, SET ANGLES, CONNECTIONS, ETC. AS REQUIRED FOR COMPLETION OF THE STRUCTURE, EVEN IF SUCH ITEMS ARE NOT EXPLICITLY CALLED FOR ON THE ARCHITECTURAL OR STRUCTURAL DRAWINGS.

S12. THE CONTRACTOR SHALL PROVIDE ALL EMBEDDED PLATES, SLEEVES, BOX-OUTS, CONDUITS, ETCETERAS, AS REQUIRED BY OTHER TRADES IN THE CONCRETE STRUCTURE.

S13. CONTRACTOR SHALL PROVIDE ALL NECESSARY TEMPORARY GUYING AND BRACING REQUIRED TO ERECT AND HOLD NEW STRUCTURE FOR WIND AND CONSTRUCTION LOADS. THE STEEL FRAME IS A NON-SUPPORTING STEEL FRAME IN ACCORDANCE WITH SECTION 7.9.3 OF THE AISC CODE OF STANDARD PRACTICE IT RELIES ON THE INTERACTION BETWEEN THE METAL ROOF DECK, THE CONCRETE COMPOSITE FLOOR, BRACED FRAMES, AND MASONRY SHEAR WALLS FOR STABILITY. THE CONTRACTOR IS TO PROVIDE TEMPORARY SUPPORTS UNTIL ALL ELEMENTS REQUIRED FOR STABILITY OF THE STEEL FRAME ARE COMPLETED.

S14. PROVIDE ANCHOR BOLTS, SETTING PLATES, AND EMBEDDED PLATES TO BE SET BY OTHERS.

S15. PROVIDE 1/4" THICK LEVELING PLATES FOR USE IN ALIGNING AND SETTING ANCHOR BOLTS AND BASE PLATES.

S16. MOMENT CONNECTIONS BETWEEN BEAMS AND COLUMNS INDICATED ON THE DRAWINGS SHALL BE DESIGNED AND DETAILED FOR THE FULL MOMENT CAPACITY OF THE CONNECTING MEMBERS, UNLESS NOTED OTHERWISE.

S17. ALL TUBE STEEL COLUMN CAP PLATES ARE TO BE 1/2" THICK MINIMUM EXCEPT MOMENT FRAMED COLUMNS ARE TO BE 3/4" THICK MINIMUM OR MATCH BEAM FLANGE, WHICH EVER IS GREATER, UNLESS OTHERWISE NOTED.

S18. PROVIDE 1/4" THICK CLOSURE PLATES AT ALL OPEN ENDED TUBE STEEL MEMBERS.

S19. STEEL FRAMING SHALL NOT BE CANTED UNLESS SPECIFICALLY NOTED AS "CANTED" ON THE STRUCTURAL DRAWINGS. WHERE THE DECK SLOPE ACROSS THE BEARING SURFACE IS GREATER THAN 1:24, PROVIDE STEEL SHIMS FOR ADEQUATE BEARING OF STEEL DECK.

STEEL JOIST NOTES

SJ1. ALL STEEL JOISTS SHALL CONFORM TO THE "STANDARD SPECIFICATIONS LOAD TABLE FOR STEEL JOISTS", OF THE STEEL JOIST INSTITUTE AND TO THE EIGHTH EDITION OF THE MASSACHUSETTS STATE BUILDING CODE IN CASE OF CONFLICT, THE MASSACHUSETTS STATE BUILDING CODE SHALL GOVERN.

SJ.2. ALL WELDING WILL BE IN ACCORDANCE WITH THE AWS D1.1 STRUCTURAL WELDING CODE.

SJ.3. TOP AND BOTTOM CHORD OF ALL JOISTS SHALL BE OF DOUBLE ANGLES.

SJ.4. STARTING POINTS FOR ALL JOIST SPACING ARE BASED ON A JOIST OCCURRING AT COLUMN CENTER LINES UNLESS OTHERWISE NOTED ON PLANS.

SJ.5. ALL CONTINUOUS HORIZONTAL BRIDGING SHALL CONSIST OF TWO MEMBERS WITH ONE MEMBER AT TOP CHORD OF JOIST AND THE OTHER AT THE BOTTOM CHORD OF JOIST. ATTACH BY WELDING AT POINT OF CONTACT WITH EACH JOIST.

SJ.6. ALL BOLTED DIAGONAL BRIDGING SHALL CONSIST OF 2 MEMBERS BOLTED TO TOP CHORD OF JOIST AND BOTTOM CHORD OR FLANGE OF ADJACENT MEMBER AND BOLTED TOGETHER AT INTERSECTION.

SJ.7. DESIGN JOISTS AND PROVIDE UPLIFT BRIDGING FOR UPLIFT WIND LOADS AS PER SPECIFICATIONS. PROVIDE BRIDGING AT FIRST BOTTOM CHORD PANEL POINT AT BOTH ENDS OF JOIST.

STEEL DECK

SD1. STEEL DECK UNITS SHALL BE FORMED FROM STEEL SHEETS CONFORMING TO ASTM A611, OR A653. A611, OR A653. WHERE GALVANIZED DECK IS INDICATED, SHEETS SHALL BE COATED WITH A ZINC COATING CONFORMING TO ASTM A653, G-60 COATING FOR FLOOR DECK AND G-90 COATING FOR ROOF DECK AND TO THE EIGHTH EDITION OF THE MASSACHUSETTS STATE BUILDING CODE IN CASE OF CONFLICT, THE MASSACHUSETTS STATE BUILDING CODE SHALL GOVERN.

SD2. STEEL ROOF DECKING SHALL BE FASTENED TO STEEL FRAMING USING 5/8 DIAMETER PUDDLE WELDS AT 8" ON CENTER AND AT SIDE LAPS BETWEEN SUPPORTS USING NO.10 TEK SCREWS AT 1'- 0" ON CENTER. FOR 3" DECK, AND 5/8" DIAMETER PUDDLE WELDS AT 6" ON CENTER AND SIDE LAPS BETWEEN SUPPORTS USING NO. 10 TEK SCREWS AT 1'- 0" ON CENTER FOR 1 1/2" DECK. WELDS SHALL BE AT ALL DECK SUPPORTS, DECK EDGES PARALLEL AND PERPENDICULAR TO DECK AT BRACED BAYS AND AS SHOWN ON THE STRUCTURAL DRAWINGS.

SD3. STEEL DECK SIZES, GAGES, AND MINIMUM PROPERTIES SHALL BE AS INDICATED ON DRAWINGS OR IN SPECIFICATIONS.

SD4. PROVIDE MINIMUM 16 GAGE SCREED ANGLE OR GREATER WHERE REQUIRED AT PERIMETER OF BUILDING AND ALL OPENINGS IN CONCRETE SLAB ON STEEL DECK, UNLESS OTHERWISE NOTED.

DESIGN LOADS

D1. ROOF SNOW LOADS
SNOW GROUND LOAD, Pg = 50 PSF
FLAT ROOF SNOW LOAD Pf = 38.5 PSF (PARTIALLY EXPOSED)
ALLOWANCE FOR DRIFTING PER THE 8TH EDITION OF MASSACHUSETTS STATE BUILDING CODE
IMPORTANCE FACTOR, Is = 1.10

D2. FLOOR LIVE LOADS
CLASSROOMS ..... 50 PSF + 20 PSF PARTITIONS
FIRST FLOOR CORRIDORS ..... 100 PSF
CORRIDORS ABOVE FIRST FLOOR ..... 80 PSF
LIBRARY READING ROOM ..... 60 PSF
LIBRARY STACK ROOM ..... 150 PSF
MECHANICAL ROOMS ..... 150 PSF MIN
AUDITORIUM STAGE ..... 150 PSF
CONTROL ROOM ..... 50 PSF
AUDITORIUM SEATING ..... 100 PSF
PUBLIC GATHERING AREAS ..... 100 PSF
STAIRS/LOBBY ..... 100 PSF
STORAGE ..... 125 PSF
TYPICAL CONCENTRATED LOAD ..... 1,000 POUNDS
PHOTOVOLTIC PANELS ..... 10 PSF

D3. WIND LOADS
AS PER THE EIGHTH EDITION OF THE MASSACHUSETTS STATE BUILDING CODE,
BASIC WIND SPEED 138 M.P.H.
EXPOSURE - C
WIND LOADS IN ACCORDANCE WITH ASCE7-10

D4. SEISMIC LOADS
AS PER THE EIGHTH EDITION OF THE MASSACHUSETTS STATE BUILDING CODE

SEISMIC DESIGN CATEGORY C

SOIL PROFILE TYPE ..... SITE CLASS E

MAPPED SPECTRAL RESPONSE
ACCELERATIONS ..... Ss = 0.245
S1 = 0.073

BASIC SEISMIC FORCE RESISTING SYSTEMS
STRUCTURAL STEEL SYSTEMS NOT SPECIFICALLY DETAILED FOR SEISMIC RESISTANCE

RESPONSE MODIFICATION FACTOR ..... R = 3.0

DEFLECTION AMPLIFICATION FACTOR ..... C = 3.0

ANALYSIS PROCEDURE ..... EQUIVALENT LATERAL FORCE

SEISMIC IMPORTANCE FACTOR ..... I_E = 1.25

RISK CATEGORY III

SPECTRAL RESPONSE COEFFICIENTS ..... SDs = 0.408
SD1 = 0.170

SEISMIC RESPONSE COEFFICIENT ..... CS = 0.170

DESIGN BASE SHEAR ..... V = 2379 KIPS

architects
526 Boston Post Rd Wayland, MA
508.358.0790 www.ai3architects.com

EDG
Engineers Design Group Inc.
Structural Engineers
350 Main St, 2nd Flr
Malden, Ma 02148
(781)396-9007
(781)396-9008 (FAX)
EDG@EDGINC.COM

Copyright©2016 AI3 Architects, LLC

BEVERLY MIDDLE SCHOOL

CABOT STREET
BEVERLY, MA 01915

BID PACKAGE #3
FOUNDATIONS, STRUCTURAL STEEL, & SITEWORK

NORTH ARROW | ADDENDUMIZED DRAWINGS

KEYPLAN

DRAWING NAME:

GENERAL NOTES

DRAWN BY: DH
REVIEWED BY: CJO
SCALE: 3/4" = 1'-0"
JOB NO: 2014-076
DATE: April 18, 2016
DRAWING NUMER: S0.01

5/20/2016 1:20:46 PM C:\Users\DHarris\Documents\Beverly - 2016_18May2016_105624_dharris.rvt

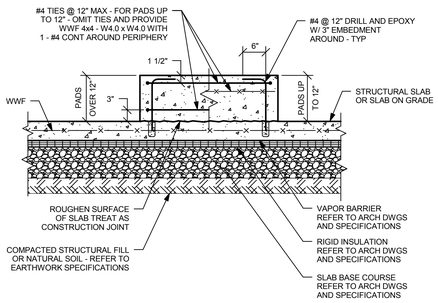

TYPICAL EQUIPMENT PAD DETAIL

NOTE:
FOR SIZE OF PADS AND LOCATIONS
SEE MECHANICAL AND ELECTRICAL DRAWINGS.

1

NO SCALE

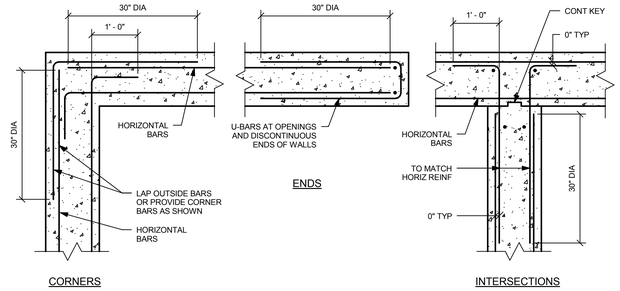

TYPICAL PLAN OF HORIZONTAL REINFORCING OF CONCRETE WALLS DETAIL

2

NO SCALE

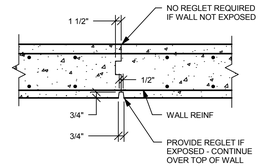

TYPICAL CONCRETE WALL CONSTRUCTION JOINT DETAIL

NOTE:
SPACE AT 60' - 0" CENTER TO CENTER MAX.

3

NO SCALE

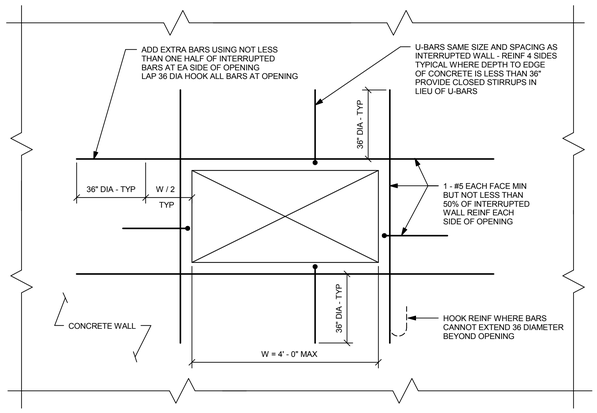

TYPICAL REINFORCEMENT AT OPENINGS IN REINFORCED CONCRETE WALLS DETAIL

NOTE:
FOR QUANTITY, LOCATION, AND SIZES REFER TO
ARCHITECTURAL AND MECHANICAL DRAWINGS.

4

NO SCALE

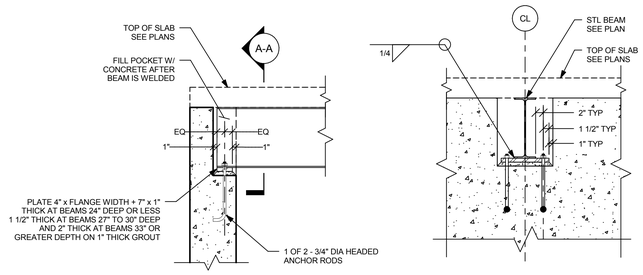

SECTION A

TYPICAL STEEL BEAM BEARING ON REINFORCED CONCRETE WALL DETAIL

5

NO SCALE

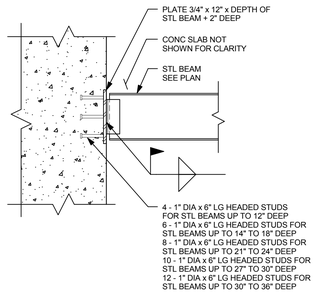

TYPICAL STEEL BEAM TO CONCRETE WALL CONNECTION DETAIL

6

NO SCALE

BAR SIZE	ℓd PER SPACING AND COVER CASE			
	CASE 1		CASE 2	
	TOP BARS	OTHER BARS	TOP BARS	OTHER BARS
#3	22	17	32	25
#4	20	22	43	33
#5	36	28	54	41
#6	43	33	64	50
#7	63	48	94	72
#8	72	55	107	82
#9	81	62	121	93
#10	91	70	136	105
#11	101	78	151	116
#14	121	93	181	139
#18	161	124	241	186

TENSION DEVELOPMENT LENGTHS, ℓd (INCHES)
FOR GRADE 60 UNCOATED BARS
f'_c = 3000 psi; NORMAL-WEIGHT CONCRETE
BASED ON ACI 12.2.2

BAR SIZE	LAP CLASS	LAP LENGTH PER SPACING AND COVER CASE			
		CASE 1		CASE 2	
		TOP BARS	OTHER BARS	TOP BARS	OTHER BARS
#3	B	28	22	42	32
#4	B	37	29	56	43
#5	B	47	36	70	54
#6	B	56	43	84	64
#7	B	81	63	122	94
#8	B	93	72	139	107
#9	B	105	81	157	121
#10	B	118	91	177	136
#11	B	131	101	196	151

TENSION LAP SPLICE LENGTHS, ℓd (INCHES)
FOR GRADE 60 UNCOATED BARS
f'_c = 3000 psi; NORMAL-WEIGHT CONCRETE
BASED ON ACI 12.2.2

3,000 PSI NORMAL-WEIGHT CONCRETE

BAR SIZE	ℓd PER SPACING AND COVER CASE			
	CASE 1		CASE 2	
	TOP BARS	OTHER BARS	TOP BARS	OTHER BARS
#3	19	15	28	22
#4	25	19	37	29
#5	31	24	47	36
#6	37	29	56	43
#7	54	42	81	63
#8	62	48	93	71
#9	70	54	105	81
#10	79	61	118	91
#11	87	67	131	101
#14	105	81	157	121
#18	139	107	209	161

TENSION DEVELOPMENT LENGTHS, ℓd (INCHES)
FOR GRADE 60 UNCOATED BARS
f'_c = 4000 psi; NORMAL-WEIGHT CONCRETE
BASED ON ACI 12.2.2

BAR SIZE	LAP CLASS	LAP LENGTH PER SPACING AND COVER CASE			
		CASE 1		CASE 2	
		TOP BARS	OTHER BARS	TOP BARS	OTHER BARS
#3	B	24	19	36	28
#4	B	32	25	48	37
#5	B	40	31	60	47
#6	B	48	37	72	56
#7	B	70	54	106	81
#8	B	80	62	121	93
#9	B	91	70	136	105
#10	B	102	79	153	118
#11	B	113	87	170	131

TENSION LAP SPLICE LENGTHS, ℓd (INCHES)
FOR GRADE 60 UNCOATED BARS
f'_c = 4000 psi; NORMAL-WEIGHT CONCRETE
BASED ON ACI 12.2.2

4,000 PSI NORMAL-WEIGHT CONCRETE

BAR SIZE	ℓd PER SPACING AND COVER CASE			
	CASE 1		CASE 2	
	TOP BARS	OTHER BARS	TOP BARS	OTHER BARS
#3	17	13	25	19
#4	22	17	33	26
#5	28	22	42	32
#6	33	26	50	38
#7	49	37	73	56
#8	72	55	107	82
#9	63	48	94	72
#10	70	54	105	81
#11	78	60	117	90
#14	94	72	140	108
#18	125	96	87	144

TENSION DEVELOPMENT LENGTHS, ℓd (INCHES)
FOR GRADE 60 UNCOATED BARS
f'_c = 5000 psi; NORMAL-WEIGHT CONCRETE
BASED ON ACI 12.2.2

BAR SIZE	LAP CLASS	LAP LENGTH PER SPACING AND COVER CASE			
		CASE 1		CASE 2	
		TOP BARS	OTHER BARS	TOP BARS	OTHER BARS
#3	B	22	17	33	25
#4	B	29	22	43	33
#5	B	36	28	54	42
#6	B	43	33	65	50
#7	B	63	49	94	73
#8	B	72	55	108	83
#9	B	81	63	122	94
#10	B	91	70	137	105
#11	B	101	78	152	117

TENSION LAP SPLICE LENGTHS, ℓd (INCHES)
FOR GRADE 60 UNCOATED BARS
f'_c = 5000 psi; NORMAL-WEIGHT CONCRETE
BASED ON ACI 12.2.2

5,000 PSI NORMAL-WEIGHT CONCRETE

ABBREVIATIONS:

d_b DENOTES NOMINAL BAR DIAMETER
$>$ DENOTES GREATER THAN
$\geq$ DENOTES EQUAL TO OR GREATER THAN
$<$ DENOTES LESS THAN
$\leq$ DENOTES EQUAL TO OR LESS THAN

NOTES:

1.) TOP BARS ARE DEFINED AS HORIZONTAL BARS WITH MORE THAN 12 INCHES OF CONCRETE CAST IN THE MEMBER BELOW THE REINFORCEMENT. WALL REINFORCEMENT IS CLASSIFIED AS OTHER BARS.

2.) FOR LIGHTWEIGHT AGGREGATE CONCRETE MULTIPLY THE VALUES ABOVE BY 1.3.

CASE 1 BEAMS AND COLUMNS: CONCRETE COVER $\geq d_b$, C,-C, BAR SPACING $\geq 2\,d_b$ AND WITH STIRRUPS OR TIES THROUGHOUT ℓd NOT LESS THAN THE CODE MINIMUM
OTHER MEMBERS: CONCRETE COVER $\geq d_b$ AND C,-C BAR SPACING $\geq 3\,d_b$

CASE 2 BEAMS AND COLUMNS: CONCRETE COVER $< d_b$ AND C,-C, BAR SPACING $< 2d_b$
OTHER MEMBERS: CONCRETE COVER $< d_b$ OR C,-C BAR SPACING $< 3\,d_b$

MINIMUM SPLICE AND EMBEDMENT LENGTH SCHEDULE

(UNLESS SHOWN OTHERWISE ON DRAWINGS)

7

NO SCALE

8

NO SCALE

architects
526 Boston Post Rd Wayland, MA
508.358.0790 www.ai3architects.com

EDG
Engineers Design Group Inc.
Structural Engineers
350 Main St, 2nd Flr
Malden, Ma 02148
(781)396-9007
(781)396-9008 (FAX)
EDG@EDGINC.COM

Copyright©2016 AI3 Architects, LLC

BEVERLY MIDDLE SCHOOL

CABOT STREET
BEVERLY, MA 01915

BID PACKAGE #3
FOUNDATIONS, STRUCTURAL STEEL, & SITEWORK

NORTH ARROW | ADDENDUMIZED DRAWINGS

KEYPLAN

DRAWING NAME:

TYPICAL DETAILS

DRAWN BY: DH
REVIEWED BY: CJO
SCALE: 3/4" = 1'-0"
JOB NO: 2014-076
DATE: April 18, 2016
DRAWING NUMER: S0.02

5/20/2016 1:20:48 PM C:\Users\DHarris\Documents\Beverly - 2016_18May2016_105624_dharris.rvt

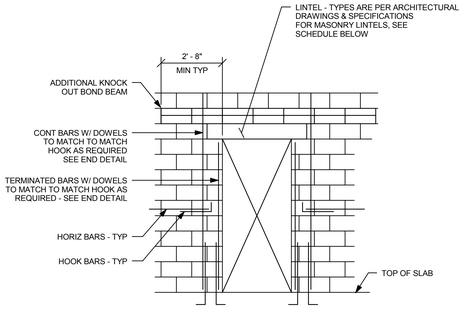

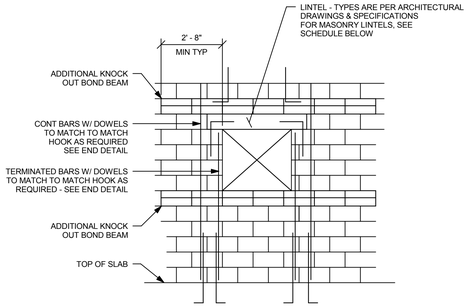

TYPICAL REINFORCING AT CMU WALLS WITH OPENINGS ELEVATION

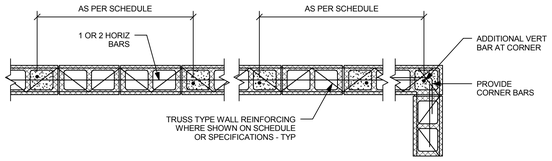

TYPICAL DETAIL

CORNER DETAIL

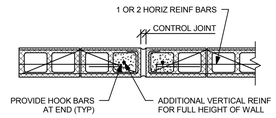

VERTICAL CONTROL JOINT DETAIL

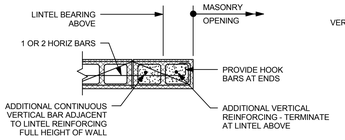

END DETAIL

NOTES:
1.) PROVIDE 1 - CONTINUOUS BAR AT MASONRY OPENING 4' - 0" OR LESS IN WIDTH. AT STEEL LINTEL CONTINUE BARS AT MASONRY LINTEL.

2.) PROVIDE 2 - CONTINUOUS BARS AT MASONRY OPENING 4' - 0" TO 8' - 0" IN WIDTH.

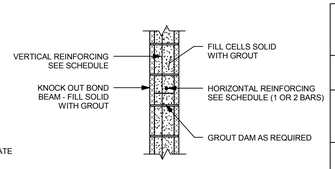

BOND BEAM DETAIL

NOTES:
1.) SEE SCHEDULE FOR SPACING.

2.) PROVIDE REINFORCED BOND BEAM WITHIN 16" OF TOP OF WALL.

3.) PROVIDE REINFORCED BOND BEAM AT TOP AND BOTTOM OF ALL OPENINGS.

MINIMUM CONCRETE MASONRY WALL REINFORCING SCHEDULE

WALL LOCATION	WALL THICKNESS	VERTICAL REINFORCING	HORIZONTAL REINFORCING
SHEAR WALLS AND LOADING BEARING SHEAR WALLS SHOWN ON PLAN	8"	#7 @ 48"	1 - #5 IN BOND BEAM AT 48" ON CENTER
	12"	#8 @ 48"	2 - #5 IN BOND BEAM AT 48" ON CENTER
CLASS 'A' WALLS	6"	#6 @ 48"	1 - #5 IN BOND BEAM AT 48" ON CENTER
ALL EXTERIOR WALLS, STAIR WALLS, AND ELEVATOR SHAFT WALLS	8"	#7 @ 48"	1 - #5 IN BOND BEAM AT 48" ON CENTER
	12"	#8 @ 48"	2 - #5 IN BOND BEAM AT 48" ON CENTER
CLASS 'B' WALLS ALL INTERIOR CMU WALLS GREATER THAN 16'-0" IN HEIGHT	ALL SIZES	#4 @ 48"	1 - #4 IN BOND BEAM AT 48" ON CENTER
CLASS 'C' WALLS ALL INTERIOR CMU WALLS 16'-0" IN HEIGHT OR LESS	ALL SIZES	#4 @ 48"	1 - #4 IN BOND BEAM AT 48" ON CENTER

NOTES:
1) REFER TO PLANS, SECTIONS, AND SPECIFICATIONS FOR REINFORCING REQUIREMENTS MORE STRINGENT THAN IN THE SCHEDULE.

2) PROVIDE REINFORCED BOND BEAM WITHIN 16" OF TOP OF WALL

3) ALL VERTICAL REINFORCING TO BE IN SOLIDLY GROUTED CELLS, AND PROVIDE 48 DIAMETER LAP AT ALL BAR SPLICES TYPICAL.

4) PROVIDE 9 GA HORIZONTAL JOINT REINFORCING AT 16" OC FOR ALL WALLS.

NOTE:
ALL REINFORCING WITHIN THE MASONRY WALL SHALL BE FURNISHED BY THE MASONRY SUB CONTRACTOR(SPECIFICATION 04200) EXCEPT DOWELS EMBEDDED IN CONCRETE FOUNDATION ARE THE RESPONSIBILITY TO THE GENERAL CONTRACTOR AND THE CONCRETE SUB-CONTRACTOR

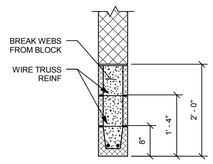

NON-BEARING WALL MASONRY LINTEL SCHEDULE

OPENING DIMS	8" x 12" WIDE BEAM	REINFORCEMENT
0' - 0" - 4' - 0"	8" x 8" DEEP	2 - #5 CONT
4 - 0" - 8' - 0"	8" x 16" DEEP	2 - #5 CONT
8' - 0" - 12' - 0"	8" x 24" DEEP	2 - #6 CONT AND WIRE TRUSS TYPE - REINF AT JOINTS
0' - 0" - 4' - 0"	12" x 8" DEEP	2 - #5 CONT
4 - 0" - 8' - 0"	12" x 16" DEEP	2 - #5 CONT AND WIRE TRUSS TYPE - REINF AT JOINTS
8' - 0" - 12' - 0"	12" x 24" DEEP	2 - #6 TOP & BOT CONT AND WIRE TRUSS TYPE REINF AT JOINTS

MASONRY LINTEL DETAIL AND SCHEDULE

NOTE:
NO CONSTRUCTION JOINTS OR CONTROL JOINTS ARE PERMITTED WITHIN 3' - 0" OF EDGE OF OPENING.

1

NO SCALE

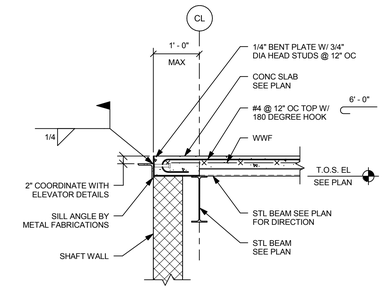

SECTION 2 AT ELEVATOR SLAB

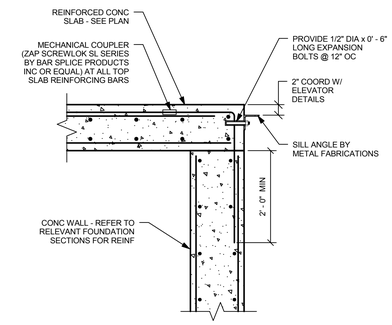

SECTION 2A AT ELEVATOR SLAB

2 2A

NO SCALE

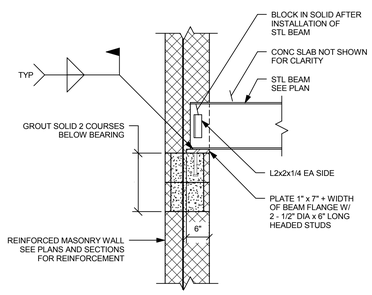

TYPICAL STEEL BEAM ON CMU DETAIL

NOTE:
STRUCTURAL STEEL SHAPES, PLATES AND HEADED STUDS ARE FURNISHED UNDER SPECIFICATION SECTION 051200 AND INSTALLED UNDER SPECIFICATION SECTION 042000.

3

NO SCALE

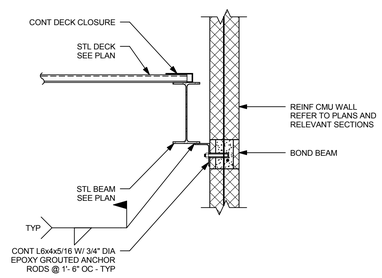

TYPICAL STEEL TO MASONRY CONNECTION DETAIL

NOTE:
DETAIL OCCURS AT ALL SHEAR + CLASS A WALLS AND WHERE SHOWN ON STRUCTURAL PLANS.

4

NO SCALE

5

NO SCALE

ai3 architects
526 Boston Post Rd Wayland, MA
508.358.0790 www.ai3architects.com

EDG
Engineers Design Group Inc.
Structural Engineers
350 Main St. 2nd Flr
Malden, Ma 02148
(781)396-9007
(781)396-9008 (FAX)
EDG@EDGINC.COM

Copyright©2016 AI3 Architects, LLC

BEVERLY MIDDLE SCHOOL

CABOT STREET
BEVERLY, MA 01915

BID PACKAGE #3
FOUNDATIONS, STRUCTURAL STEEL, & SITEWORK

NORTH ARROW | ADDENDUMIZED DRAWINGS

KEYPLAN

DRAWING NAME:

TYPICAL DETAILS

DRAWN BY: DH
REVIEWED BY: CJO
SCALE: 3/4" = 1'-0"
JOB NO: 2014-076
DATE: April 18, 2016
DRAWING NUMER: S0.03

5/20/2016 1:20:49 PM C:\Users\DHarris\Documents\Beverly - 2016_18May2016_105624_dharris.rvt

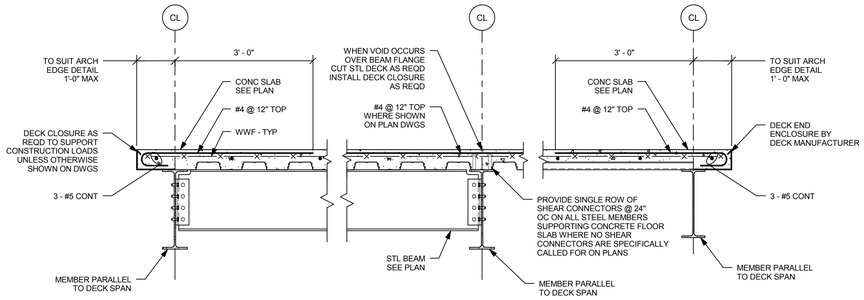

TYPICAL CONCRETE SLAB ON STEEL DECK DETAIL

NOTE:
CENTER SHEAR STUDS DIRECTLY OVER BEAM WEB FOR ALL BEAMS WITH FLANGE THICKNESS LESS THAN 5/16".

1 NO SCALE

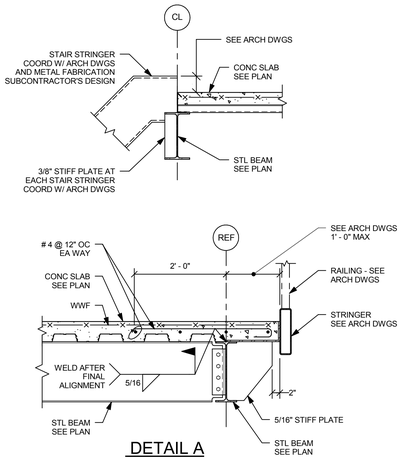

DETAIL A

TYPICAL STAIR STRINGER SUPPORT DETAILS

2 2A NO SCALE

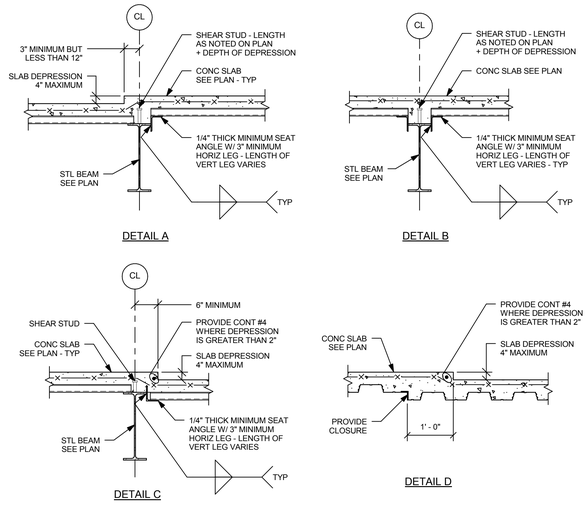

TYPICAL STEEL DECK AT CHANGES IN SLAB ELEVATIONS OR SLAB THICKNESS DETAIL

3 NO SCALE

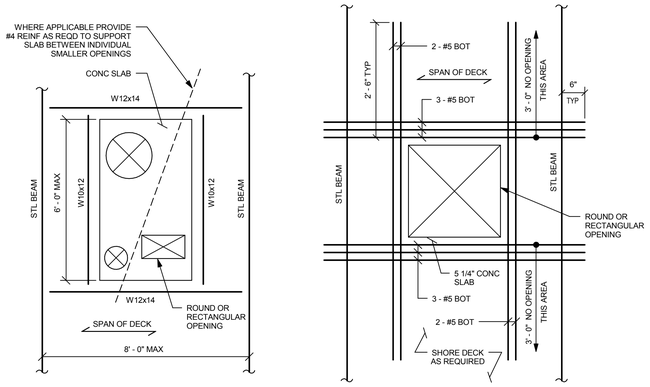

TYPE 1

TYPE 2

NOTE:
FOR OPENINGS 2' - 0" OR LESS.

TYPICAL REINFORCEMENT AT OPENINGS IN CONCRETE SLAB ON STEEL DECK DETAIL

NOTES:

1.) FOR QUANTITY, LOCATION, AND SIZES REFER TO ARCHITECTURAL, MECHANICAL, ELECTRICAL, PLUMBING AND FIRE PROTECTION DRAWINGS.

2.) SIZE AND LOCATION TO BE DETERMINED DURING CONSTRUCTION.

4 NO SCALE

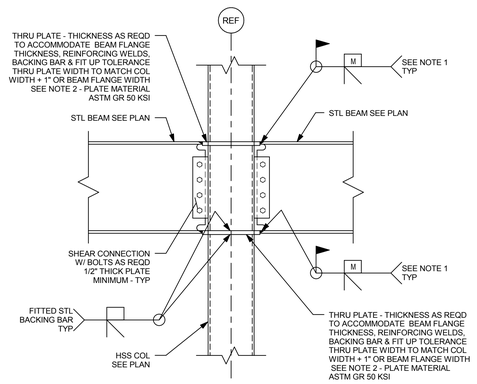

TYPICAL FULLY RESTRAINED MOMENT CONNECTION BEAM TO HSS COLUMN DETAIL

NOTES:

1.) REMOVE STEEL BACKING BAR AT BOTTOM FLANGE. THE ROOT PASS SHALL BE BACK GOUGED TO SOUND WELD METAL AND RE-WELDED, ADD A 5/16" REINFORCING FILLET WELD AT THE TOP AND BOTTOM OF THE BOTTOM FLANGE. ADD A 5/16" REINFORCING FILLET WELD TO THE TOP OF THE TOP FLANGE. ADD A 5/16" MINIMUM REINFORCING FILLET WELD TO THE BOTTOM OF STEEL BACKING BAR AT THE TOP FLANGE.

2.) PROVIDE ADDITIONAL THRU PLATES WHERE BEAM DEPTHS VARY.

3.) SEE AISC SEISMIC DESIGN MANUAL FOR ADDITIONAL REQUIREMENTS.

5 NO SCALE

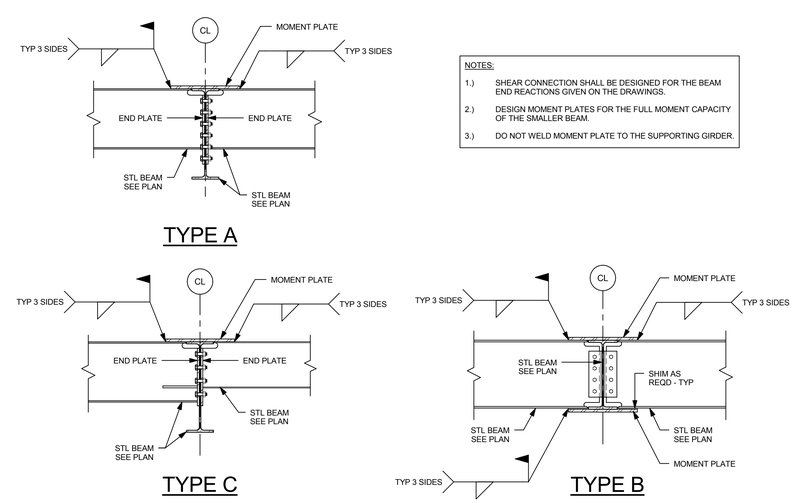

NOTES:

1.) SHEAR CONNECTION SHALL BE DESIGNED FOR THE BEAM END REACTIONS GIVEN ON THE DRAWINGS.

2.) DESIGN MOMENT PLATES FOR THE FULL MOMENT CAPACITY OF THE SMALLER BEAM.

3.) DO NOT WELD MOMENT PLATE TO THE SUPPORTING GIRDER.

BEAM TO BEAM MOMENT CONNECTION DETAILS

6 NO SCALE

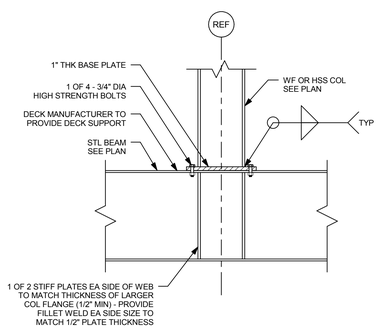

TYPICAL STEEL COLUMN SUPPORTED BY STEEL BEAM DETAIL

7 NO SCALE

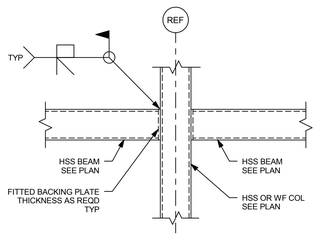

TYPICAL HSS BEAM TO COLUMN AND BEAM CONNECTION DETAIL

NOTES:

1.) GRIND ALL WELDS SMOOTH AT EXPOSED LOCATIONS PRIOR TO SPECIAL FINISH.

2.) PROVIDE 3/4" END PLATE WHEN HSS BEAM IS WIDER THAN HSS COLUMN.

8 NO SCALE

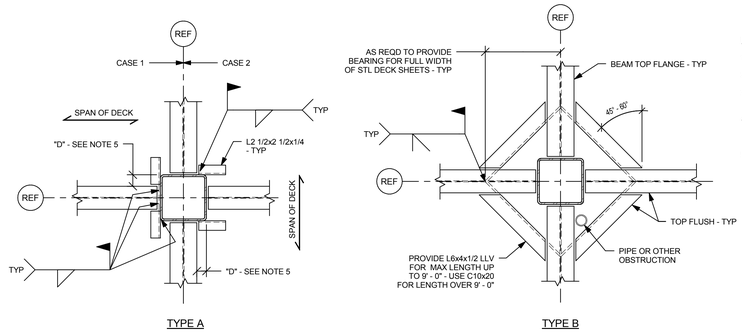

NOTES: USE SIMILAR DETAIL:

1.) AT BEAM TO BEAM MOMENT CONNECTION.

2.) WHERE PIPE SELVES OCCUR NEXT TO COLUMN.

3.) WHERE COLUMN BASE PLATE OCCURS ON TOP FLANGE OF STEEL BEAM.

4.) AT ALL OTHER CONDITIONS WHERE DECK SUPPORT IS INTERRUPTED FOR A DISTANCE GREATER THAN 6".

5.) WHERE "D" IS 6" OR LESS DECK SUPPORT ANGLES ARE NOT REQUIRED.

TYPICAL PLAN OF STEEL DECK SUPPORT DETAIL

9 NO SCALE

ai3 architects
526 Boston Post Rd Wayland, MA
508.358.0790 www.ai3architects.com

EDG
Engineers Design Group Inc.
Structural Engineers
350 Main St. 2nd Flr
Malden, Ma 02148
(781)396-9007
(781)396-9008 (FAX)
EDG@EDGINC.COM

Copyright©2016 Ai3 Architects, LLC

BEVERLY MIDDLE SCHOOL

CABOT STREET
BEVERLY, MA 01915

BID PACKAGE #3
FOUNDATIONS, STRUCTURAL STEEL, & SITEWORK

NORTH ARROW | ADDENDUMIZED DRAWINGS

KEYPLAN

DRAWING NAME:

TYPICAL DETAILS

DRAWN BY: DH
REVIEWED BY: CJO
SCALE: 3/4" = 1'-0"
JOB NO: 2014-076
DATE: April 18, 2016
DRAWING NUMER: S0.04

5/20/2016 1:20:50 PM C:\Users\DHarris\Documents\Beverly - 2016_18May2016_105624_dharris.rvt

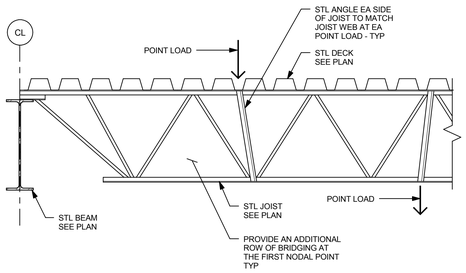

TYPICAL JOIST BOTTOM AND TOP CHORD REINFORCING DETAIL

NOTE:
PROVIDE AT ALL CONDITIONS WHERE JOIST IS LOADED AT LOCATIONS OTHER THAN A PANEL POINT. COORDINATE WITH TRADES FOR EXACT LOCATIONS.

1

NO SCALE

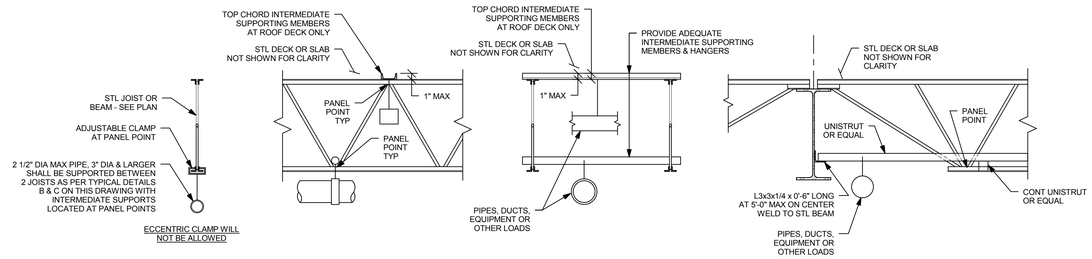

TYPICAL JOIST LOADING METHOD DETAIL

NOTES:

1.) WHERE POSSIBLE ALL HANGERS SHALL BE SUSPENDED FROM WIDE FLANGE BEAMS.

2.) PIPES, DUCTS, FIXTURES, ETC. SHALL NOT BE HUNG FROM NEW OR EXISTING STEEL DECK OR EXISTING CONCRETE SLAB OR BRIDGING ANGLES.

3.) THE SUM OF ALL BUILDING TRADES HANGER LOADS SHALL NOT EXCEED 250 LBS. PER JOIST. WHEN THIS MAXIMUM IS EXCEEDED A DETAIL OF PROPOSED METHOD OF HANGING SHALL BE SUBMITTED TO THE ARCHITECT FOR APPROVAL.

4.) HANGERS AND SUPPORTING MEMBERS SHALL BE LOCATED AT PANEL POINTS.

5.) PIPING WITH A 4" DIAMETER AND LARGER RUNNING PERPENDICULAR TO JOISTS SHALL BE SUPPORTED FROM EVERY JOIST.

6.) CONTRACTOR SHALL COORDINATE WITH ALL TRADES CONCERNED.

7.) USE THESE TYPICAL DETAILS WHERE APPLICABLE, UNLESS OTHERWISE SHOWN. FIELD MEASURE FOR SIZE OF EXISTING STRUCTURAL FRAMING.

8.) ALL ADDED UNISTRUTS, ANGLES, AND HANGERS TO BE SUPPLIED AND INSTALLED BY F.M.E.P. SUB-CONTRACTORS. REFER TO RELEVANT SPECIFICATIONS.

9.) REFER TO TYPICAL DETAIL 3 ON DRAWING S0.05 FOR ADDITIONAL REINFORCING WHEN HANGERS OR INTERMEDIATE SUPPORTING MEMBERS CAN NOT BE LOCATED AT PANEL POINT. ADDITIONAL REINFORCING SHALL BE SUPPLIED AND INSTALLED BY THE GENERAL CONTRACTOR.

2

NO SCALE

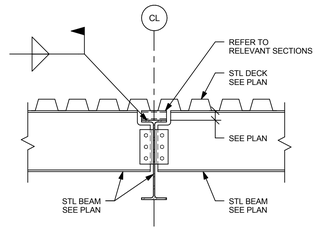

TYPICAL BEAM / JOIST SUPPORT DETAIL

3

NO SCALE

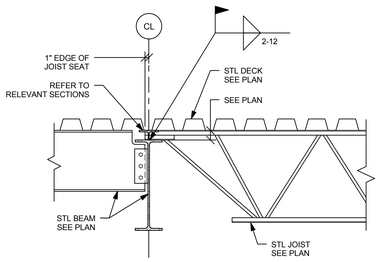

TYPICAL BEAM / JOIST SUPPORT DETAIL AT ROOF

4

NO SCALE

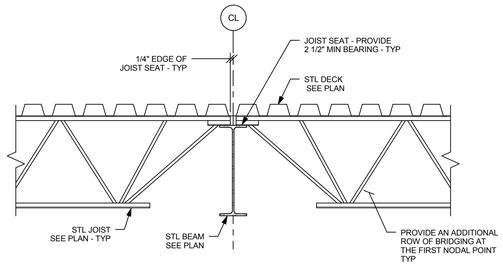

TYPICAL BEAM / JOIST SUPPORT DETAIL AT ROOF

5

NO SCALE

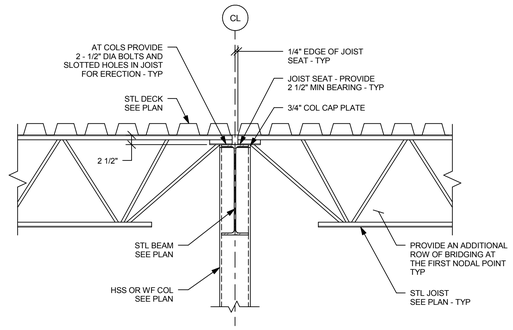

TYPICAL JOIST TO COLUMN CONNECTION DETAIL AT ROOF

6

NO SCALE

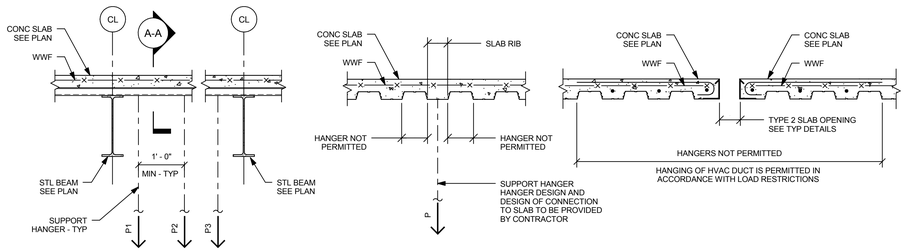

DETAIL A-A

TYPICAL DETAIL - CONCRETE SLAB ON COMPOSITE STEEL DECK SUPPORT HANGER LOAD RESTRICTIONS

NOTES:

1.) P = SINGLE SUPPORT HANGER LOAD - MAXIMUM LOAD OF SINGLE HANGER = 150 lb.

2.) P1 + P2 + P3 = 300 lb - SUM OF ALL SUPPORT LOADS HUNG ALONG A SINGLE RIB SHALL NOT EXCEED 300 lbs.

3.) 3 SUPPORT HANGERS SHOWN ACTUAL NUMBER OF HANGERS VARIES.

4.) DO NOT HANG FROM STEEL DECK TABS.

5.) DESIGN OF HANGERS AND HANGER CONNECTIONS TO THE SLAB IS BY THE CONTRACTOR.

6.) WHERE POSSIBLE ALL HANGERS SHALL BE SUSPENDED FROM THE STRUCTURAL STEEL BEAMS.

7.) DO NOT INSTALL HANGER UNTIL CONCRETE HAS REACHED ITS 28 DAY COMPRESSIVE STRENGTH.

8.) THIS DETAIL SHOULD BE LIMITED TO MAXIMUM 6" DIAMETER PIPES.PIPES LARGER THAT 6" DIAMETER SHOULD BE SUPPORTED FROM THE STRUCTURAL STEEL BEAMS ONLY USING CONCENTRIC HANGERS FROM BEAM FLANGES OR SOME OTHER SUPPORTS SUCH THAT THE LOAD IS NOT ECCENTRIC TO THE BEAM CENTERLINE.

7

NO SCALE

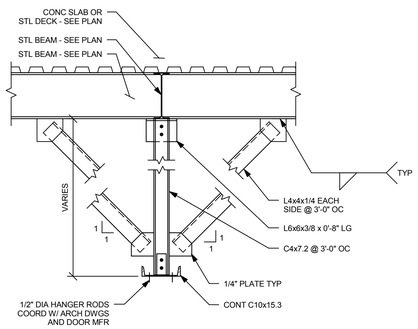

TYPICAL FOLDING DOOR SUPPORT DETAIL

NOTE:
THIS SUPPORT STEEL IS IN THE SCOPE OF THE METAL FABRICATION (SPECIFICATION 055000)

8

NO SCALE

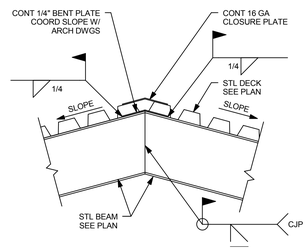

NOTES:

1.) COORDINATE SLOPE WITH ARCHITECTURAL DRAWINGS.

2.) COORDINATE DECK SUPPORT WITH DETAIL 2 ON DRAWING S0.05.

3) PROVIDE WELDS TO DEVELOP FULL CAPACITY OF BEAM SPECIFIED.

9

NO SCALE

ai3 architects
526 Boston Post Rd Wayland, MA
508.358.0790 www.ai3architects.com

EDG
Engineers Design Group Inc.
Structural Engineers
350 Main St. 2nd Flr
Malden, Ma 02148
(781)396-9007
(781)396-9008 (FAX)
EDG@EDGINC.COM

BEVERLY MIDDLE SCHOOL

CABOT STREET
BEVERLY, MA 01915

Copyright©2016 AI3 Architects, LLC

BID PACKAGE #3
FOUNDATIONS, STRUCTURAL STEEL, & SITEWORK

NORTH ARROW | ADDENDUMIZED DRAWINGS

KEYPLAN

DRAWING NAME:

TYPICAL DETAILS

DRAWN BY: DH
REVIEWED BY: CJO
SCALE: 3/4" = 1'-0"
JOB NO: 2014-076
DATE: April 18, 2016
DRAWING NUMER: S0.05

5/20/2016 1:20:51 PM C:\Users\DHarris\Documents\Beverly - 2016_18May2016_105624_dharris.rvt

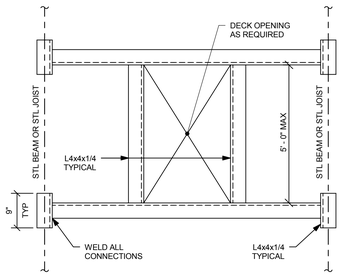

TYPICAL PLAN OF OPENINGS IN ROOF DETAIL

NOTE:
FOR QUANTITY, LOCATION, AND SIZES, REFER TO ARCHITECTURAL AND MECHANICAL DRAWINGS.

1

NO SCALE

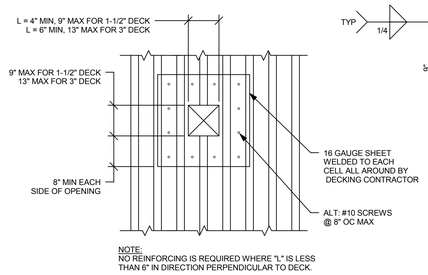

NOTE:
NO REINFORCING IS REQUIRED WHERE "L" IS LESS THAN 6" IN DIRECTION PERPENDICULAR TO DECK.

DETAIL 1

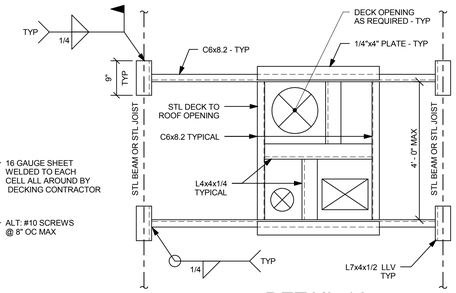

DETAIL 1A

TYPICAL PLAN OF OPENINGS AND PENETRATIONS IN 1 1/2" DEEP & 3" DEEP ROOF DECK DETAIL

NOTES:

1.) IN ADDITION TO QUANTITIES SHOWN ON STRUCTURAL, ARCHITECTURAL, MECHANICAL, ELECTRICAL, PLUMBING AND FIRE PROTECTION DRAWINGS ALLOW FOR 10 ADDITIONAL LOCATIONS EACH FOR DETAIL 1 AND 1A.

2.) SIZE AND LOCATION TO BE DETERMINED DURING CONSTRUCTION.

3.) INSTALL FRAME BEFORE INSTALLATION OF STEEL ROOF DECK. WELD DECK TO FRAME PER SPECIFICATIONS.

4.) FOR OPENINGS LARGER THAN 4' - 0" NOTIFY ENGINEER.

2

NO SCALE

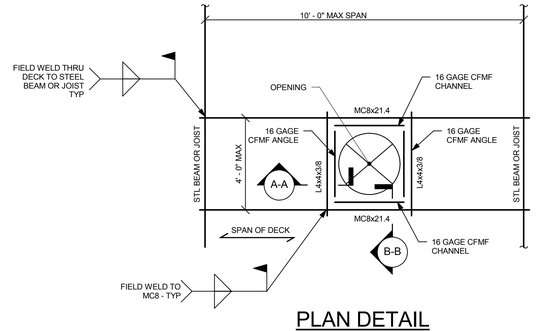

PLAN DETAIL

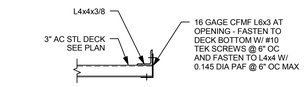

DETAIL A-A

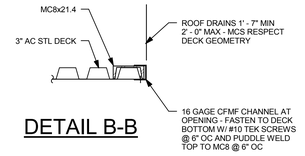

DETAIL B-B

TYPICAL OPENINGS AND PENETRATIONS IN 3" DEEP CELLULAR ROOF DECK

3

NO SCALE

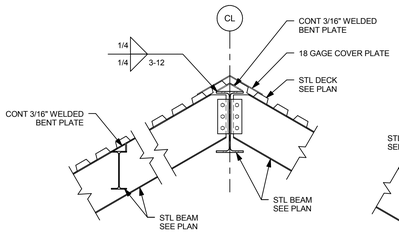

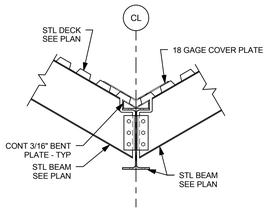

TYPICAL ROOF RIDGE AND VALLEY DETAIL

4

NO SCALE

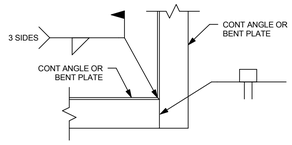

TYPICAL CONTINUOUS EDGE ANGLE PLAN DETAIL AT CORNER

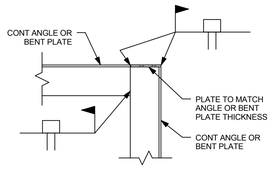

TYPICAL CONTINUOUS EDGE ANGLE PLAN DETAIL AT RE-ENTRANT CORNER

5

NO SCALE

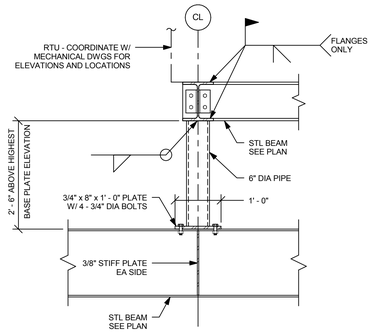

TYPICAL SUPPORT OF ROOF TOP MECHANICAL UNIT DETAIL

NOTE:
ALL EXPOSED STEEL TO BE GALVANIZED.

6

NO SCALE

7

NO SCALE

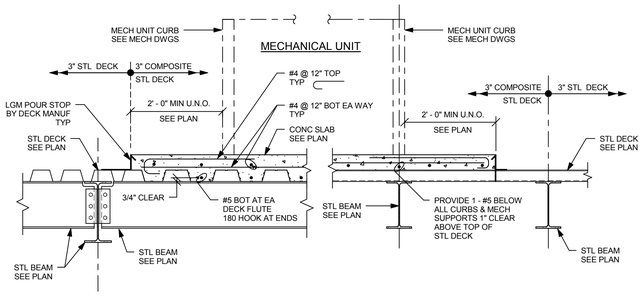

TYPICAL MECHANICAL UNIT ROOF SLAB

NOTES:

1.) 7" CONCRETE SLAB WITH 3" DEEP x 16 GAGE, GALVANIZED COMPOSITE METAL DECK.

2.) TOP OF SLAB ELEVATION VARIES WITH SLOPE OF DECK. MAINTAIN UNIFORM 7" SLAB THICKNESS

3.) REFER TO PLANS FOR SLAB LOCATIONS.

4.) REFER TO ARCHITECTURAL AND MECHANICAL DRAWINGS FOR MECHANICAL UNIT TO STRUCTURE CONNECTION AND ADDITIONAL DETAILS.

5.) COORDINATE SLAB OPENINGS WITH MECHANICAL DRAWINGS AND TYPICAL DETAILS.

8

NO SCALE

A3 architects
526 Boston Post Rd Wayland, MA
508.358.0790 www.ai3architects.com

EDG
Engineers Design Group Inc.
Structural Engineers
350 Main St. 2nd Flr
Malden, Ma 02148
(781)396-9007
(781)396-9008 (FAX)
EDG@EDGINC.COM

Copyright©2016 A3 Architects, LLC

BEVERLY MIDDLE SCHOOL

CABOT STREET
BEVERLY, MA 01915

BID PACKAGE #3
FOUNDATIONS, STRUCTURAL STEEL, & SITEWORK

NORTH ARROW | ADDENDUMIZED DRAWINGS

KEYPLAN

DRAWING NAME:

TYPICAL DETAILS

DRAWN BY: DH
REVIEWED BY: CJO
SCALE: 3/4" = 1'-0"
JOB NO: 2014-076
DATE: April 18, 2016
DRAWING NUMER: S0.06

5/20/2016 1:20:53 PM C:\Users\DHarris\Documents\Beverly - 2016_18May2016_105624_dharris.rvt

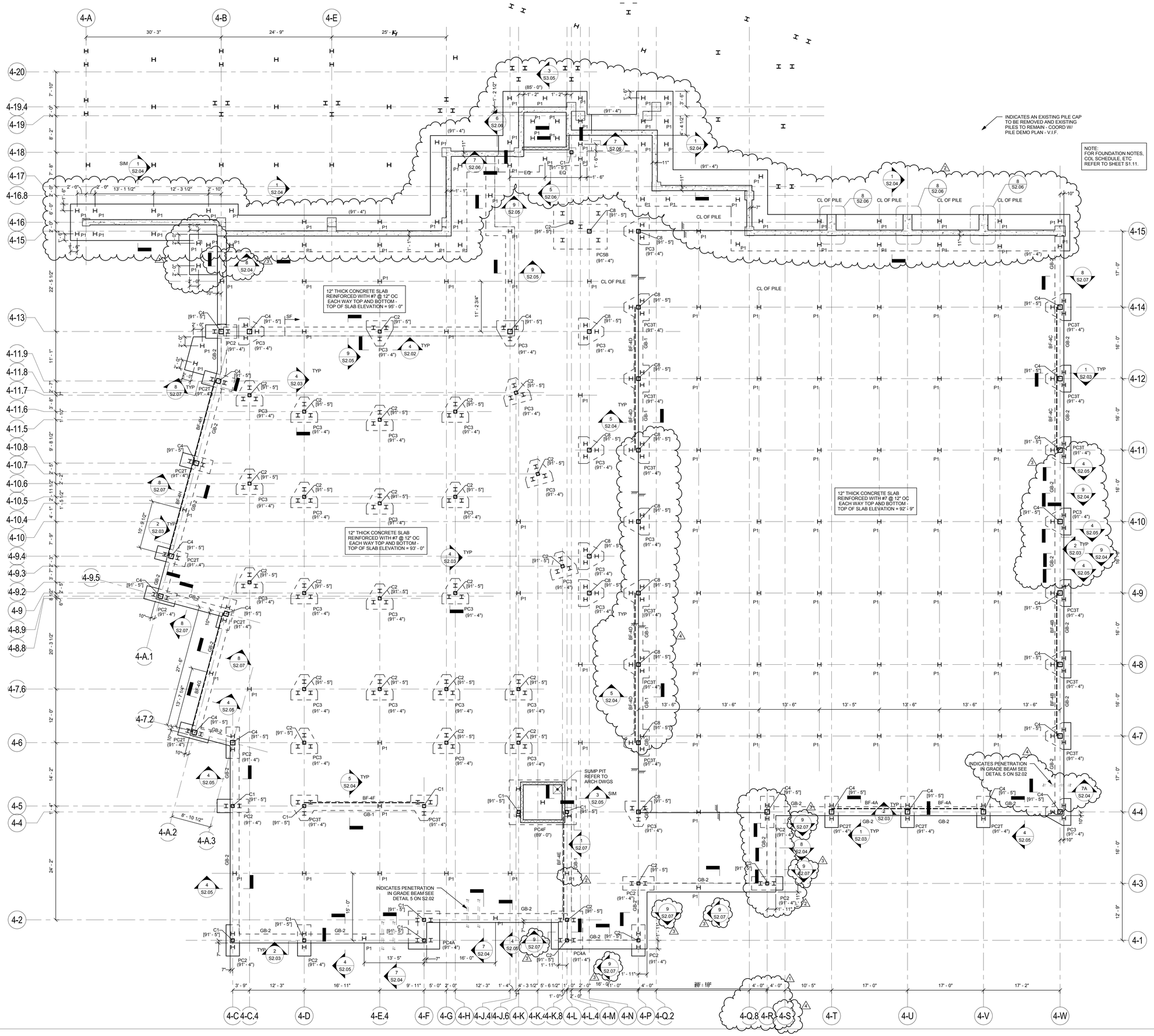

526 Boston Post Rd Wayland, MA
508.358.0790 www.ai3architects.com

Engineers Design Group Inc.
Structural Engineers
350 Main St. 2nd Flr
Malden, Ma 02148
(781)396-9007
(781)396-9008 (FAX)
EDG@EDGINC.COM

BEVERLY MIDDLE SCHOOL

CABOT STREET
BEVERLY, MA 01915

Copyright©2016 A3 Architects, LLC

BID PACKAGE #3
FOUNDATIONS, STRUCTURAL STEEL, & SITEWORK

NORTH ARROW

ADDENDUMIZED DRAWINGS

KEYPLAN

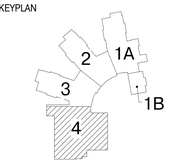

DRAWING NAME:

LOWER FLOOR FOUNDATION PLAN ZONE 4

DRAWN BY:	DH
REVIEWED BY:	CJO
SCALE: 1/8" = 1'-0"	DRAWING NUMER:
JOB NO: 2014-076	S1.04
DATE: April 18, 2016	

5/20/2016 1:20:56 PM C:\Users\DHarris\Documents\Beverly - 2016_18May2016_105624_dharris.rvt

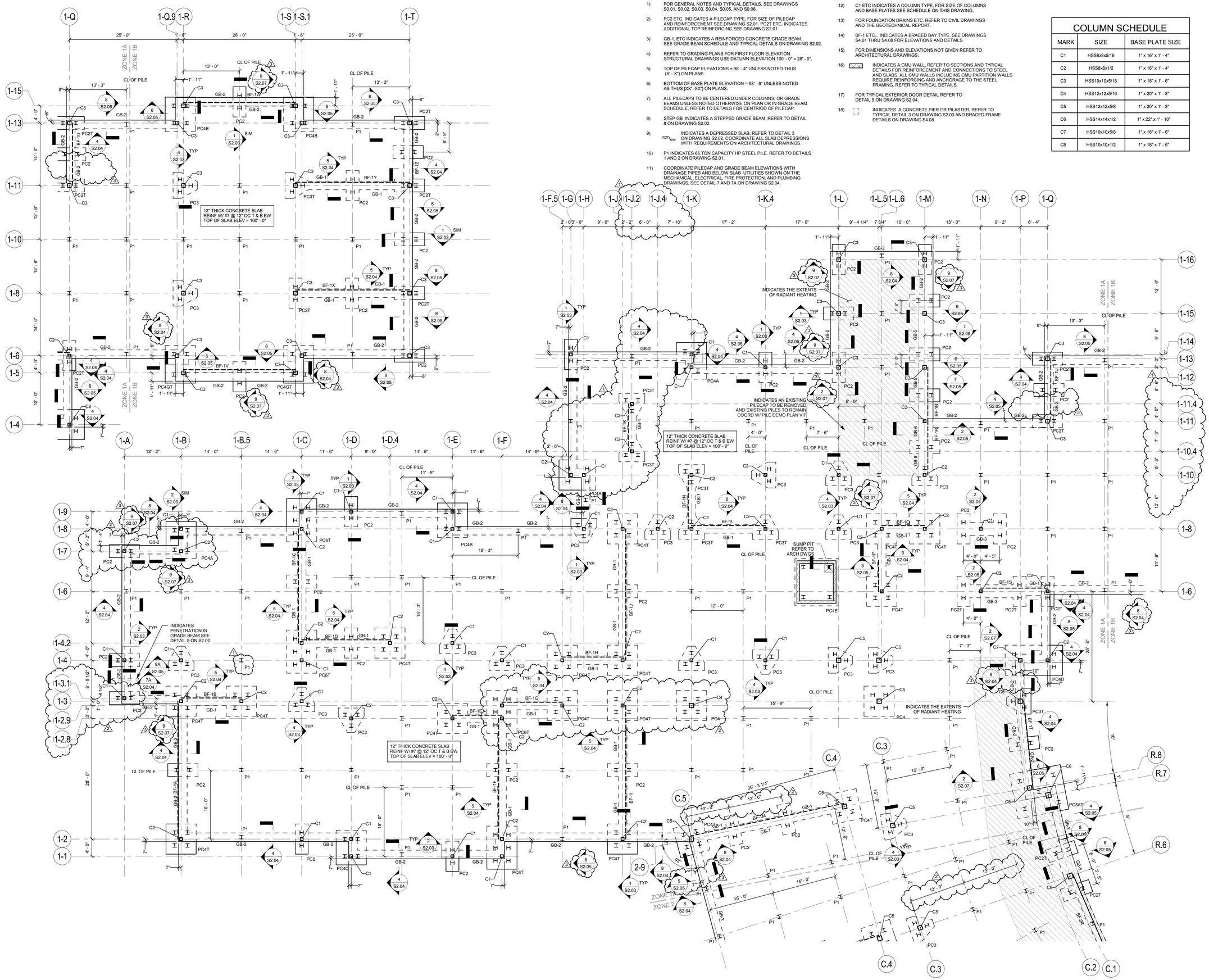

FOUNDATION NOTES:

1) FOR GENERAL NOTES AND TYPICAL DETAILS, SEE DRAWINGS S0.01, S0.02, S0.03, S0.04, S0.05, AND S0.06.

2) PC2 ETC. INDICATES A PILECAP TYPE. FOR SIZE OF PILECAP AND REINFORCEMENT SEE DRAWING S2.01. PC2T ETC. INDICATES ADDITIONAL TOP REINFORCING SEE DRAWING S2.01.

3) GB-1, ETC INDICATES A REINFORCED CONCRETE GRADE BEAM. SEE GRADE BEAM SCHEDULE AND TYPICAL DETAILS ON DRAWING S2.02.

4) REFER TO GRADING PLANS FOR FIRST FLOOR ELEVATION. STRUCTURAL DRAWINGS USE DATUMN ELEVATION 100' - 0" = 28' - 0".

5) TOP OF PILECAP ELEVATIONS = 98' - 4" UNLESS NOTED THUS (X' - X") ON PLANS.

6) BOTTOM OF BASE PLATE ELEVATION = 98' - 5" UNLESS NOTED AS THUS [XX' -XX"] ON PLANS.

7) ALL PILECAPS TO BE CENTERED UNDER COLUMNS, OR GRADE BEAMS UNLESS NOTED OTHERWISE ON PLAN OR IN GRADE BEAM SCHEDULE, REFER TO DETAILS FOR CENTROID OF PILECAP.

8) STEP GB INDICATES A STEPPED GRADE BEAM, REFER TO DETAIL 8 ON DRAWING S2.02.

9) INDICATES A DEPRESSED SLAB, REFER TO DETAIL 3 ON DRAWING S2.02. COORDINATE ALL SLAB DEPRESSIONS WITH REQUIREMENTS ON ARCHITECTURAL DRAWINGS.

10) P1 INDICATES 65 TON CAPACITY HP STEEL PILE. REFER TO DETAILS 1 AND 2 ON DRAWING S2.01.

11) COORDINATE PILECAP AND GRADE BEAM ELEVATIONS WITH DRAINAGE PIPES AND BELOW SLAB UTILITIES SHOWN ON THE MECHANICAL, ELECTRICAL, FIRE PROTECTION, AND PLUMBING DRAWINGS, SEE DETAIL 7 AND 7A ON DRAWING S2.04.

FOUNDATION NOTES:

12) C1 ETC INDICATES A COLUMN TYPE, FOR SIZE OF COLUMNS AND BASE PLATES SEE SCHEDULE ON THIS DRAWING.

13) FOR FOUNDATION DRAINS ETC. REFER TO CIVIL DRAWINGS AND THE GEOTECHNICAL REPORT.

14) BF-1 ETC... INDICATES A BRACED BAY TYPE. SEE DRAWINGS S4.01 THRU S4.08 FOR ELEVATIONS AND DETAILS.

15) FOR DIMENSIONS AND ELEVATIONS NOT GIVEN REFER TO ARCHITECTURAL DRAWINGS.

16) INDICATES A CMU WALL, REFER TO SECTIONS AND TYPICAL DETAILS FOR REINFORCEMENT AND CONNECTIONS TO STEEL AND SLABS. ALL CMU WALLS INCLUDING CMU PARTITION WALLS REQUIRE REINFORCING AND ANCHORAGE TO THE STEEL FRAMING. REFER TO TYPICAL DETAILS.

17) FOR TYPICAL EXTERIOR DOOR DETAIL REFER TO DETAIL 9 ON DRAWING S2.04.

18) INDICATES A CONCRETE PIER OR PILASTER, REFER TO TYPICAL DETAIL 3 ON DRAWING S2.03 AND BRACED FRAME DETAILS ON DRAWING S4.08.

COLUMN SCHEDULE

MARK	SIZE	BASE PLATE SIZE
C1	HSS8x8x5/16	1" x 16" x 1' - 4"
C2	HSS8x8x1/2	1" x 16" x 1' - 4"
C3	HSS10x10x5/16	1" x 18" x 1' - 6"
C4	HSS12x12x5/16	1" x 20" x 1' - 8"
C5	HSS12x12x5/8	1" x 20" x 1' - 8"
C6	HSS14x14x1/2	1" x 22" x 1' - 10"
C7	HSS10x10x5/8	1" x 18" x 1' - 6"
C8	HSS10x10x1/2	1" x 18" x 1' - 6"

A3 architects
526 Boston Post Rd Wayland, MA
508.358.0790 www.ai3architects.com

EDG
Engineers Design Group Inc.
Structural Engineers
350 Main St. 2nd Flr
Malden, Ma 02148
(781)396-9007
(781)396-9008 (FAX)
EDG@EDGINC.COM

Copyright©2016 A3 Architects, LLC

BEVERLY MIDDLE SCHOOL

CABOT STREET
BEVERLY, MA 01915

BID PACKAGE #3
FOUNDATIONS, STRUCTURAL STEEL, & SITEWORK

NORTH ARROW | ADDENDUMIZED DRAWINGS

KEYPLAN

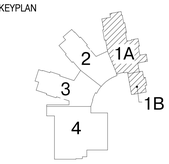

DRAWING NAME:
FIRST FLOOR FOUNDATION PLAN ZONE 1A AND 1B

DRAWN BY: DH
REVIEWED BY: CJO
SCALE: 1/8" = 1'-0"
JOB NO: 2014-076
DATE: April 18, 2016
DRAWING NUMER: S1.11

5/20/2016 1:21:01 PM C:\Users\DHarris\Documents\Beverly - 2016_18May2016_105624_dharris.rvt

FOUNDATION NOTES:

1) FOR GENERAL NOTES AND TYPICAL DETAILS, SEE DRAWINGS S0.01, S0.02, S0.03, S0.04, S0.05, AND S0.06.

2) PC2 ETC. INDICATES A PILECAP TYPE, FOR SIZE OF PILECAP AND REINFORCEMENT SEE DRAWING S2.01. PC2T ETC. INDICATES ADDITIONAL TOP REINFORCING SEE DRAWING S2.01.

3) GB-1, ETC INDICATES A REINFORCED CONCRETE GRADE BEAM. SEE GRADE BEAM SCHEDULE AND TYPICAL DETAILS ON DRAWING S2.02.

4) REFER TO GRADING PLANS FOR FIRST FLOOR ELEVATION. STRUCTURAL DRAWINGS USE DATUMN ELEVATION 100' - 0" = 28' - 0".

5) TOP OF PILECAP ELEVATIONS = 98' - 4" UNLESS NOTED THUS (X' - X") ON PLANS.

6) BOTTOM OF BASE PLATE ELEVATION = 98' - 5" UNLESS NOTED AS THUS [XX' -XX"] ON PLANS.

7) ALL PILECAPS TO BE CENTERED UNDER COLUMNS, OR GRADE BEAMS UNLESS NOTED OTHERWISE ON PLAN OR IN GRADE BEAM SCHEDULE, REFER TO DETAILS FOR CENTRIOD OF PILECAP.

8) STEP GB INDICATES A STEPPED GRADE BEAM, REFER TO DETAIL 8 ON DRAWING S2.02.

9) INDICATES A DEPRESSED SLAB, REFER TO DETAIL 3 ON DRAWING S2.02. COORDINATE ALL SLAB DEPRESSIONS WITH REQUIREMENTS ON ARCHITECTURAL DRAWINGS.

10) P1 INDICATES 65 TON CAPACITY HP STEEL PILE. REFER TO DETAILS 1 AND 2 ON DRAWING S2.01.

11) COORDINATE PILECAP AND GRADE BEAM ELEVATIONS WITH DRAINAGE PIPES AND BELOW SLAB UTILITIES SHOWN ON THE MECHANICAL, ELECTRICAL, FIRE PROTECTION, AND PLUMBING DRAWINGS, SEE DETAIL 7 AND 7A ON DRAWING S2.04.

FOUNDATION NOTES:

12) C1 ETC INDICATES A COLUMN TYPE, FOR SIZE OF COLUMNS AND BASE PLATES SEE SCHEDULE ON THIS DRAWING.

13) FOR FOUNDATION DRAINS ETC. REFER TO CIVIL DRAWINGS AND THE GEOTECHNICAL REPORT.

14) BF-1 ETC., INDICATES A BRACED BAY TYPE. SEE DRAWINGS S4.01 THRU S4.08 FOR ELEVATIONS AND DETAILS.

15) FOR DIMENSIONS AND ELEVATIONS NOT GIVEN REFER TO ARCHITECTURAL DRAWINGS.

16) INDICATES A CMU WALL, REFER TO SECTIONS AND TYPICAL DETAILS FOR REINFORCEMENT AND CONNECTIONS TO STEEL AND SLABS. ALL CMU WALLS INCLUDING CMU PARTITION WALLS REQUIRE REINFORCING AND ANCHORAGE TO THE STEEL FRAMING. REFER TO TYPICAL DETAILS.

17) FOR TYPICAL EXTERIOR DOOR DETAIL REFER TO DETAIL 9 ON DRAWING S2.04.

18) INDICATES A CONCRETE PIER OR PILASTER, REFER TO TYPICAL DETAIL 3 ON DRAWING S2.03 AND BRACED FRAME DETAILS ON DRAWING S4.08.

COLUMN SCHEDULE

MARK	SIZE	BASE PLATE SIZE
C1	HSS8x8x5/16	1" x 16" x 1' - 4"
C2	HSS8x8x1/2	1" x 16" x 1' - 4"
C3	HSS10x10x5/16	1" x 18" x 1' - 6"
C4	HSS12x12x5/16	1" x 20" x 1' - 8"
C5	HSS12x12x5/8	1" x 20" x 1' - 8"
C6	HSS14x14x1/2	1" x 22" x 1' - 10"
C7	HSS10x10x5/8	1" x 18" x 1' - 6"
C8	HSS10x10x1/2	1" x 18" x 1' - 6"

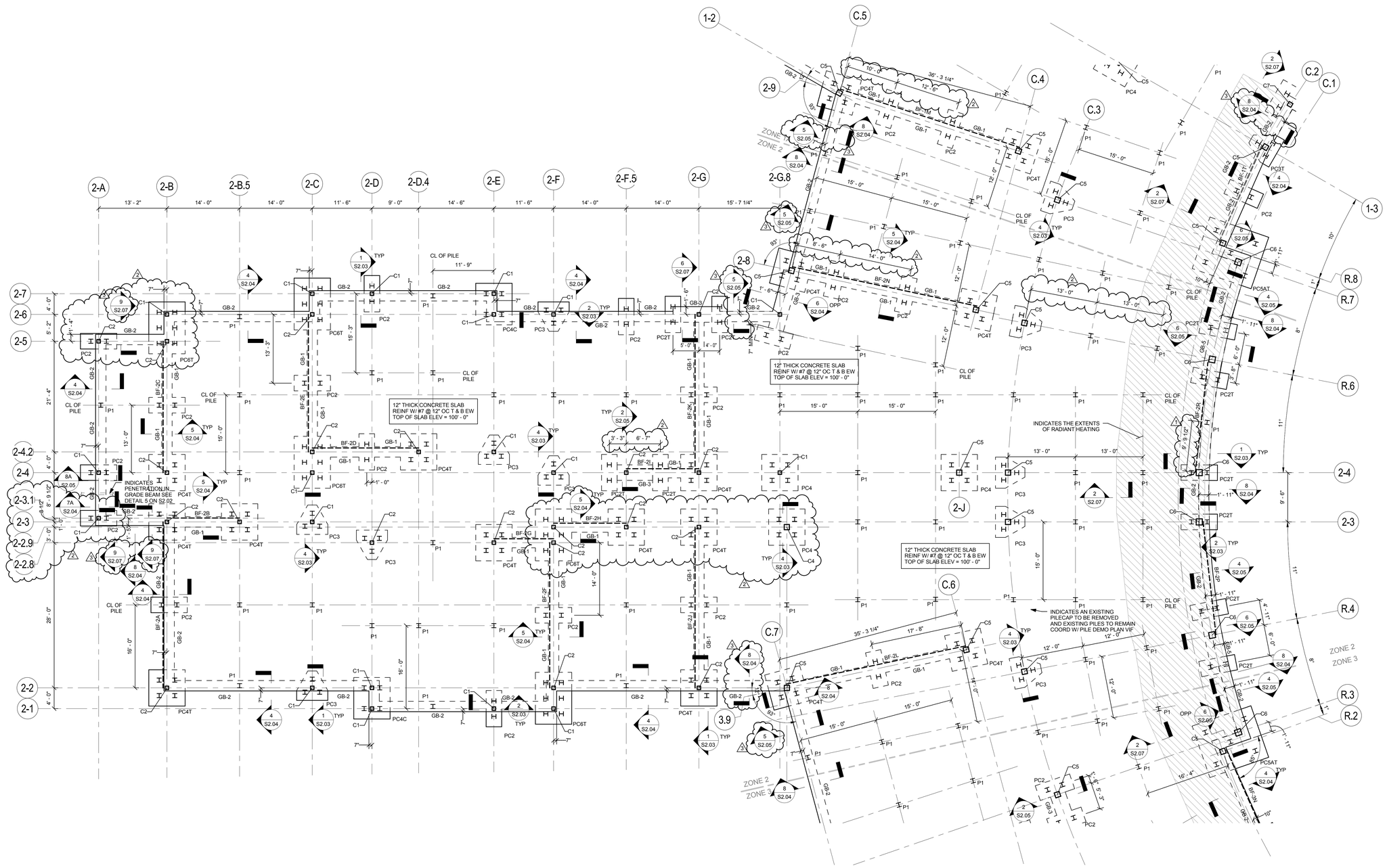

A13 architects
526 Boston Post Rd Wayland, MA
508.358.0790 www.ai3architects.com

EDG
Engineers Design Group Inc.
Structural Engineers
350 Main St. 2nd Flr
Malden, Ma 02148
(781)396-9007
(781)396-9008 (FAX)
EDG@EDGINC.COM

Copyright©2016 A13 Architects, LLC

BEVERLY MIDDLE SCHOOL

CABOT STREET
BEVERLY, MA 01915

BID PACKAGE #3
FOUNDATIONS, STRUCTURAL STEEL, & SITEWORK

NORTH ARROW | ADDENDUMIZED DRAWINGS

KEYPLAN

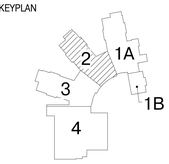

DRAWING NAME:

FIRST FLOOR FOUNDATION PLAN ZONE 2

DRAWN BY: DH
REVIEWED BY: CJO
SCALE: 1/8" = 1'-0"
JOB NO: 2014-076
DATE: April 18, 2016
DRAWING NUMER: S1.12

5/20/2016 1:21:05 PM C:\Users\DHarris\Documents\Beverly - 2016_18May2016_105624_dharris.rvt

FOUNDATION NOTES:

1) FOR GENERAL NOTES AND TYPICAL DETAILS, SEE DRAWINGS S0.01, S0.02, S0.03, S0.04, S0.05, AND S0.06.

2) PC2 ETC. INDICATES A PILECAP TYPE. FOR SIZE OF PILECAP AND REINFORCEMENT SEE DRAWING S2.01. PC2T ETC. INDICATES ADDITIONAL TOP REINFORCING SEE DRAWING S2.01.

3) GB-1, ETC INDICATES A REINFORCED CONCRETE GRADE BEAM. SEE GRADE BEAM SCHEDULE AND TYPICAL DETAILS ON DRAWING S2.02.

4) REFER TO GRADING PLANS FOR FIRST FLOOR ELEVATION. STRUCTURAL DRAWINGS USE DATUMN ELEVATION 100' - 0" = 28' - 0".

5) TOP OF PILECAP ELEVATIONS = 98' - 4" UNLESS NOTED THUS (X' - X") ON PLANS.

6) BOTTOM OF BASE PLATE ELEVATION = 98' - 5" UNLESS NOTED AS THUS [XX' -XX"] ON PLANS.

7) ALL PILECAPS TO BE CENTERED UNDER COLUMNS, OR GRADE BEAMS UNLESS NOTED OTHERWISE ON PLAN OR IN GRADE BEAM SCHEDULE, REFER TO DETAILS FOR CENTRIOD OF PILECAP.

8) STEP GB INDICATES A STEPPED GRADE BEAM, REFER TO DETAIL 8 ON DRAWING S2.02.

9) INDICATES A DEPRESSED SLAB, REFER TO DETAIL 3 ON DRAWING S2.02. COORDINATE ALL SLAB DEPRESSIONS WITH REQUIREMENTS ON ARCHITECTURAL DRAWINGS.

10) P1 INDICATES 65 TON CAPACITY HP STEEL PILE. REFER TO DETAILS 1 AND 2 ON DRAWING S2.01.

11) COORDINATE PILECAP AND GRADE BEAM ELEVATIONS WITH DRAINAGE PIPES AND BELOW SLAB UTILITIES SHOWN ON THE MECHANICAL, ELECTRICAL, FIRE PROTECTION, AND PLUMBING DRAWINGS, SEE DETAIL 7 AND 7A ON DRAWING S2.04.

FOUNDATION NOTES:

12) C1 ETC INDICATES A COLUMN TYPE, FOR SIZE OF COLUMNS AND BASE PLATES SEE SCHEDULE ON THIS DRAWING.

13) FOR FOUNDATION DRAINS ETC. REFER TO CIVIL DRAWINGS AND THE GEOTECHNICAL REPORT.

14) BF-1 ETC... INDICATES A BRACED BAY TYPE. SEE DRAWINGS S4.01 THRU S4.08 FOR ELEVATIONS AND DETAILS.

15) FOR DIMENSIONS AND ELEVATIONS NOT GIVEN REFER TO ARCHITECTURAL DRAWINGS.

16) INDICATES A CMU WALL, REFER TO SECTIONS AND TYPICAL DETAILS FOR REINFORCEMENT AND CONNECTIONS TO STEEL AND SLABS. ALL CMU WALLS INCLUDING CMU PARTITION WALLS REQUIRE REINFORCING AND ANCHORAGE TO THE STEEL FRAMING. REFER TO TYPICAL DETAILS.

17) FOR TYPICAL EXTERIOR DOOR DETAIL REFER TO DETAIL 9 ON DRAWING S2.04.

18) INDICATES A CONCRETE PIER OR PILASTER. REFER TO TYPICAL DETAIL 3 ON DRAWING S2.03 AND BRACED FRAME DETAILS ON DRAWING S4.08.

COLUMN SCHEDULE

MARK	SIZE	BASE PLATE SIZE
C1	HSS8x8x5/16	1" x 16" x 1' - 4"
C2	HSS8x8x1/2	1" x 16" x 1' - 4"
C3	HSS10x10x5/16	1" x 18" x 1' - 6"
C4	HSS12x12x5/16	1" x 20" x 1' - 8"
C5	HSS12x12x5/8	1" x 20" x 1' - 8"
C6	HSS14x14x1/2	1" x 22" x 1' - 10"
C7	HSS10x10x5/8	1" x 18" x 1' - 6"
C8	HSS10x10x1/2	1" x 18" x 1' - 6"

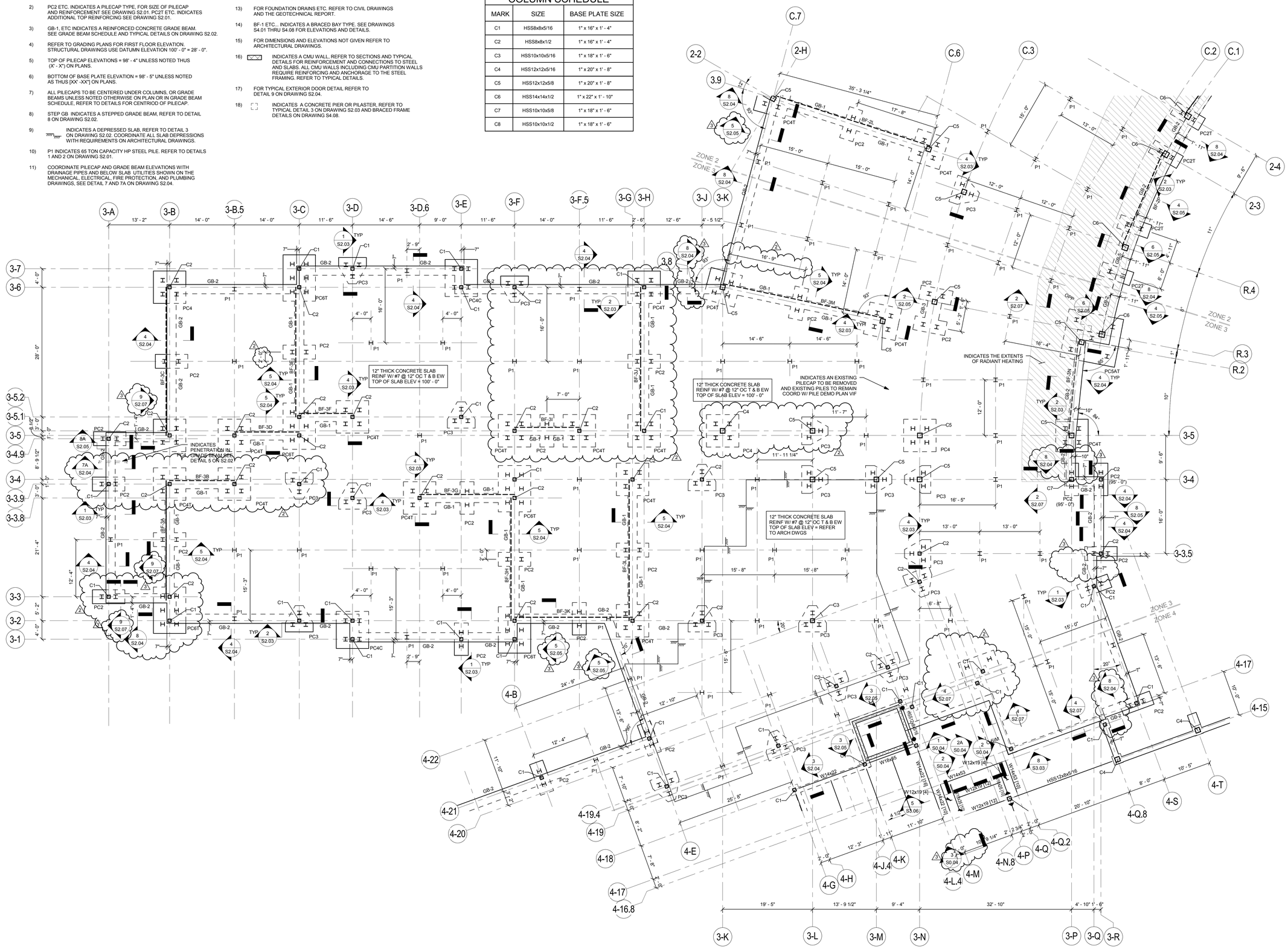

526 Boston Post Rd Wayland, MA
508.358.0790 www.ai3architects.com

Engineers Design Group Inc.
Structural Engineers
350 Main St. 2nd Flr
Malden, Ma 02148
(781)396-9007
(781)396-9008 (FAX)
EDG@EDGINC.COM

BEVERLY MIDDLE SCHOOL

CABOT STREET
BEVERLY, MA 01915

Copyright©2016 AI3 Architects, LLC

BID PACKAGE #3
FOUNDATIONS, STRUCTURAL STEEL, & SITEWORK

NORTH ARROW

ADDENDUMIZED DRAWINGS

KEYPLAN

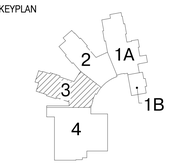

DRAWING NAME:

FIRST FLOOR FOUNDATION PLAN ZONE 3

DRAWN BY: DH

REVIEWED BY: CJO

SCALE: 1/8" = 1'-0"

JOB NO: 2014-076

DATE: April 18, 2016

DRAWING NUMER: S1.13

5/20/2016 1:21:08 PM C:\Users\DHarris\Documents\Beverly - 2016_18May2016_105624_dharris.rvt

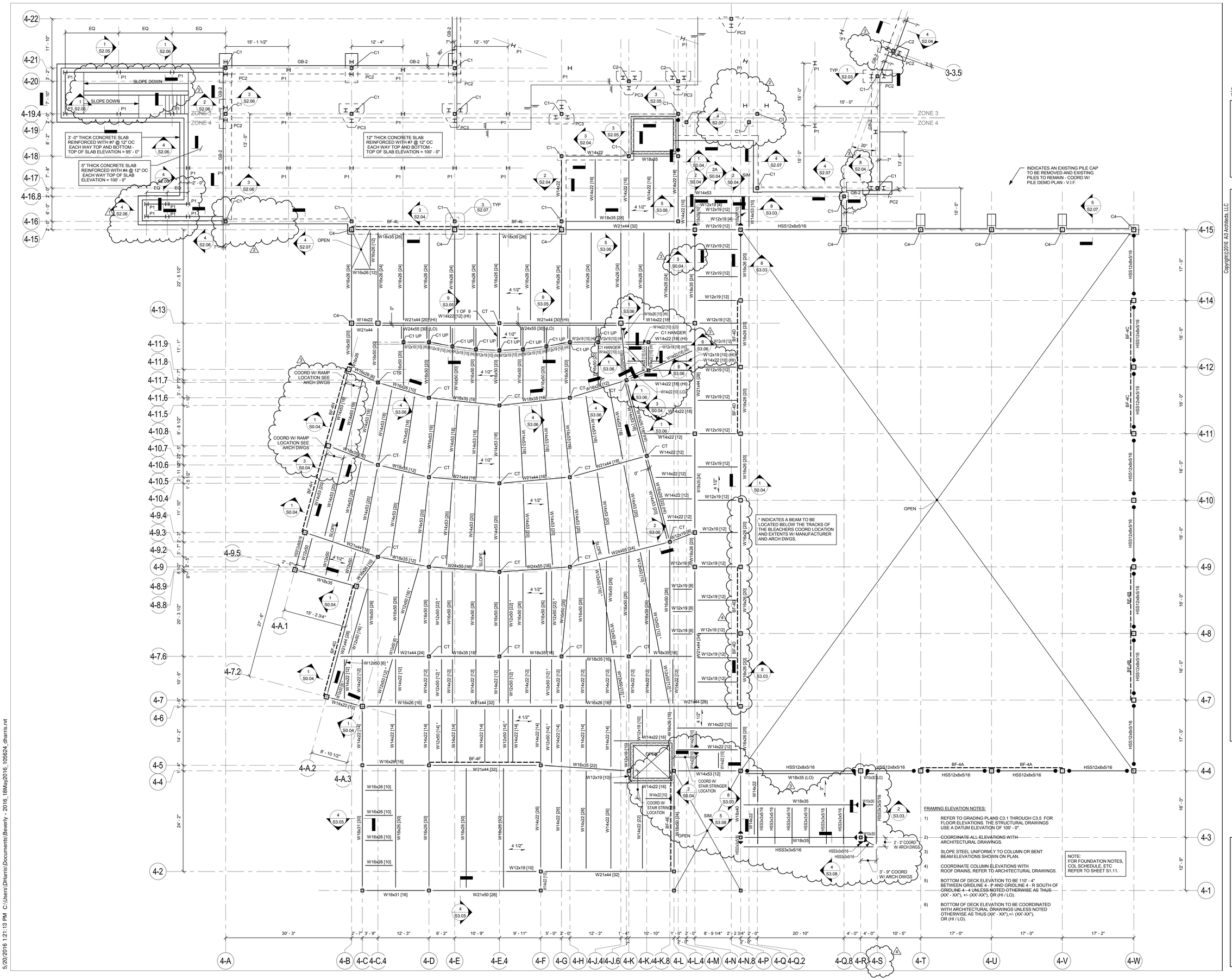

FRAMING ELEVATION NOTES:

1) REFER TO GRADING PLANS C3.1 THROUGH C3.5 FOR FLOOR ELEVATIONS. THE STRUCTURAL DRAWINGS USE A DATUM ELEVATION OF 100' - 0".
2) COORDINATE ALL ELEVATIONS WITH ARCHITECTURAL DRAWINGS.
3) SLOPE STEEL UNIFORMLY TO COLUMN OR BENT BEAM ELEVATIONS SHOWN ON PLAN.
4) COORDINATE COLUMN ELEVATIONS WITH ROOF DRAINS, REFER TO ARCHITECTURAL DRAWINGS.
5) BOTTOM OF DECK ELEVATION TO BE 110' - 4" BETWEEN GRIDLINE 4 - P AND GRIDLINE 4 - R SOUTH OF GRIDLINE 4 - 4 UNLESS NOTED OTHERWISE AS THUS (XX' - XX"), +/- (XX'-XX"), OR (HI / LO).
6) BOTTOM OF DECK ELEVATION TO BE COORDINATED WITH ARCHITECTURAL DRAWINGS UNLESS NOTED OTHERWISE AS THUS (XX' - XX"),+/- (XX'-XX"), OR (HI / LO).

NOTE:
FOR FOUNDATION NOTES, COL SCHEDULE, ETC REFER TO SHEET S1.11.

architects
526 Boston Post Rd Wayland, MA
508.358.0790 www.ai3architects.com

EDG
Engineers Design Group Inc.
Structural Engineers
350 Main St. 2nd Flr
Malden, Ma 02148
(781)396-9007
(781)396-9008 (FAX)
EDG@EDGINC.COM

Copyright©2016 AI3 Architects, LLC

BEVERLY MIDDLE SCHOOL

CABOT STREET
BEVERLY, MA 01915

BID PACKAGE #3
FOUNDATIONS, STRUCTURAL STEEL, & SITEWORK

NORTH ARROW

ADDENDUMIZED DRAWINGS

KEYPLAN

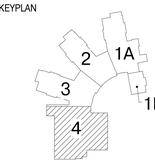

DRAWING NAME:

FIRST FLOOR FOUNDATION PLAN ZONE 4

DRAWN BY: DH

REVIEWED BY: CJO

SCALE: 1/8" = 1'-0"

JOB NO: 2014-076

DATE: April 18, 2016

DRAWING NUMER: S1.14

5/20/2016 1:21:13 PM C:\Users\DHarris\Documents\Beverly - 2016_18May2016_105624_dharris.rvt

FRAMING ELEVATION NOTES:

1) REFER TO GRADING PLANS FOR FIRST FLOOR ELEVATIONS. THE STRUCTURAL DRAWINGS USE A DATUM ELEVATION OF 100' - 0". WHICH IS EQUAL TO ELEVATION 28' - 0" ON THE CIVIL DWGS

2) COORDINATE ALL ELEVATIONS WITH ARCHITECTURAL DRAWINGS.

3) SLOPE STEEL UNIFORMLY TO COLUMN OR BENT BEAM ELEVATIONS SHOWN ON PLAN.

4) COORDINATE COLUMN ELEVATIONS WITH ROOF DRAINS, REFER TO ARCHITECTURAL DRAWINGS.

5) BOTTOM OF DECK ELEVATION TO BE 113' - 7 1/2" UNLESS NOTED OTHERWISE AS THUS (XX' - XX"), +/- (XX'-XX"), OR (HI / LO).

6) BOTTOM OF DECK ELEVATION TO BE 113' - 1" BETWEEN GRIDS GRIDLINE 1 - L AND 1 - M NORTH OF GRIDLINE 1 - 15 UNLESS NOTED OTHERWISE AS THUS (XX' - XX"),+/- (XX'-XX"), OR (HI / LO).

7) BOTTOM OF DECK ELEVATION TO BE 113' - 2" BETWEEN GRIDLINE 1 - M AND 1 - Q NORTH OF GRIDLINE 1 - 8 AND BETWEEN GIRDLINE 1-N AND 1 - Q NORTH OF GRIDLINE 1 - 6 UNLESS NOTED OTHERWISE AS THUS (XX' - XX"),+/- (XX'-XX"), OR (HI / LO).

FRAMING NOTES:

1) FOR GENERAL NOTES AND TYPICAL DETAILS, SEE DRAWINGS S0.01, S0.02, S0.03, S0.04, AND S0.05.

2.) CT INDICATES A COLUMN TERMINATES AT THIS LEVEL.

3.) INDICATES A STRUCTURAL MASONRY PARTITION WALL BELOW. REFER TO RELEVANT SECTIONS FOR REINFORCING. REFER TO SEISMIC CLIPPING DETAIL X ON DRAWING S0.0X AND DETAIL X ON DRAWING S0.0X FOR CONNECTION TO STEEL. PROVIDE MINIMUM REINFORCEMENT PER DETAIL X ON DRAWING S0.0X.

4.) BF-1 INDICATES A BRACED BAY TYPE. SEE DRAWINGS S4.01, S4.02, S4.03 AND S4.04 FOR ELEVATIONS AND DETAILS.

5.) 4 1/2" INDICATES SPAN DIRECTION OF 2" DEEP, 18 GAGE, GALVANIZED COMPOSITE STEEL DECK WITH 2 1/2" NORMAL WEIGHT CONCRETE TOPPING. TOTAL THICKNESS = 4 1/2". REINFORCE WITH 6 x 6 - W2.9 x W2.9 WWF TYPICAL UNLESS NOTED OTHERWISE.

6.) 4 1/2" 16 GA INDICATES SPAN DIRECTION OF 2" DEEP, 16 GAGE, GALVANIZED COMPOSITE STEEL DECK WITH 2 1/2" NORMAL WEIGHT CONCRETE TOPPING. TOTAL THICKNESS = 4 1/2". REINFORCE WITH 6 x 6 - W2.9 x W2.9 WWF TYPICAL UNLESS NOTED OTHERWISE.

7.) 3" INDICATES SPAN OF 3" DEEP x 18 GA TYPE N, GALVANIZED STEEL ROOF DECK.

8.) 3" AC INDICATES SPAN OF 3" DEEP x 18 GA TYPE NCAS, GALVANIZED ACOUSTICAL CELLULAR STEEL ROOF DECK.

9.) 7" INDICATES SPAN OF 3" DEEP 18 GA TYPE N GALVANIZED COMPOSITE STEEL DECK WITH 4" LIGHTWEIGHT CONCRETE TOPPING. TOTAL THICKNESS = 7" REINFORCE WITH 6 x 6 - W2.9 x W2.9 WWF. SEE DETAIL 3/S0.05 FOR DECK SUPPORT. PROVIDE OPENING REINFORCING AS SHOWN IN DETAIL 8/S0.05.

10.) FOR EDGE OF SLAB/DECK DIMENSIONS, REFER TO ARCHITECTURAL DRAWINGS FOR ADDITIONAL INFORMATION. REFER TO DETAIL X ON DRAWING S0.0X AND DETAIL X ON DRAWING S0.0X UNLESS NOTED OTHERWISE ON PLANS.

11.) INDICATES A MOMENT CONNECTION TO DEVELOP THE FULL CAPACITY OF THE MEMBER. REFER TO TYPICAL DETAIL X ON DRAWING S0.0X.

12.) INDICATES WELD ALL AROUND, REFER TO TYPICAL DETAIL X ON DRAWING S0.0X.

13.) WF INDICATES A BENT STEEL BEAM, REFER TO DETAILS 8 AND 9 ON DRAWING S0-0-6.

14.) < X" > INDICATES UPWARD CAMBER AT THE MID-SPAN OF THE MEMBER.

15.) [XX] INDICATES THE NUMBER OF 3/4" DIAMETER x 4" LONG HEADED STUDS WELDED TO THE TOP FLANGE OF THE BEAM. SPACE STUDS EVENLY ALONG THE BEAM UNLESS NOTED OTHERWISE.

16.) FOR EXACT NUMBER, SIZE, AND LOCATION OF OPENINGS IN STEEL DECKING, REFER TO MECHANICAL AND ARCHITECTURAL DRAWINGS. FOR FRAMING REFER TO DETAIL X ON DRAWING S0.0X AND DETAILS X AND X ON DRAWING S0.0X.

17.) REFER TO ARCHITECTURAL DRAWINGS FOR ELEVATIONS AND VERTICAL DIMENSIONS. PITCH ALL STEEL UNIFORMLY TO LOW POINTS AT THE COLUMNS AND BENT BEAMS AS SHOWN ON THE ARCHITECTURAL DRAWINGS.

18.) INDICATES A ROOF DRAIN, REFER TO DETAIL X ON DRAWING S0.0X AND DETAIL X ON DRAWING S0.0X FOR DECK SUPPORT. REFER TO ARCHITECTURAL AND PLUMBING DRAWINGS FOR EXACT LOCATIONS.

19.) FOR DIMENSIONS AND ELEVATIONS NOT GIVEN REFER TO ARCHITECTURAL DRAWINGS.

20.) 50k INDICATES A SHEAR TAB CONNECTION DESIGNED FOR AN UNFACTORED AXIAL SEISMIC FORCE OF ± 50 KIPS.

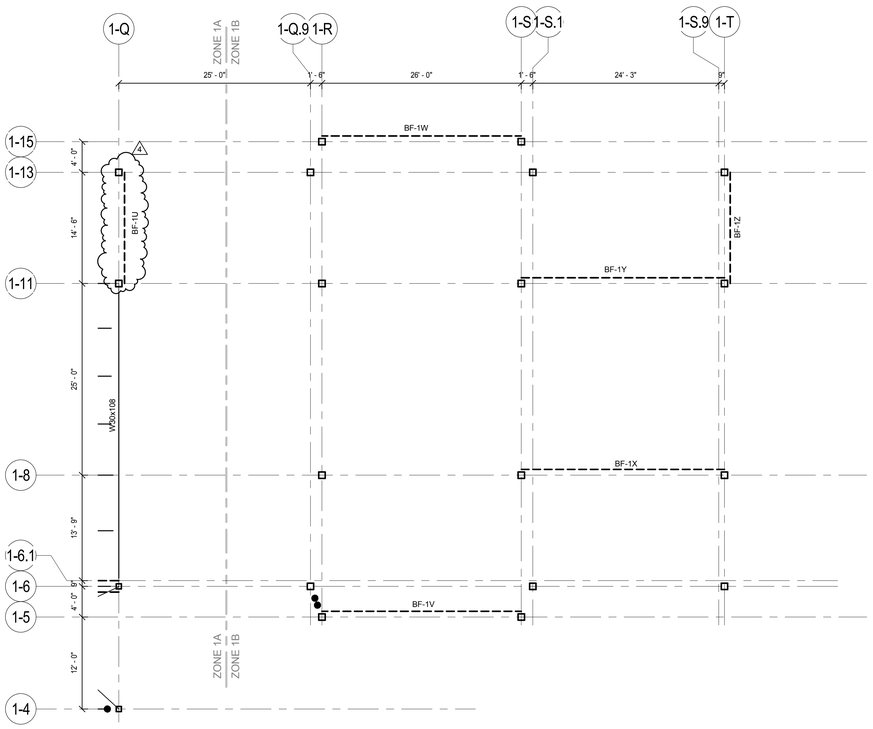

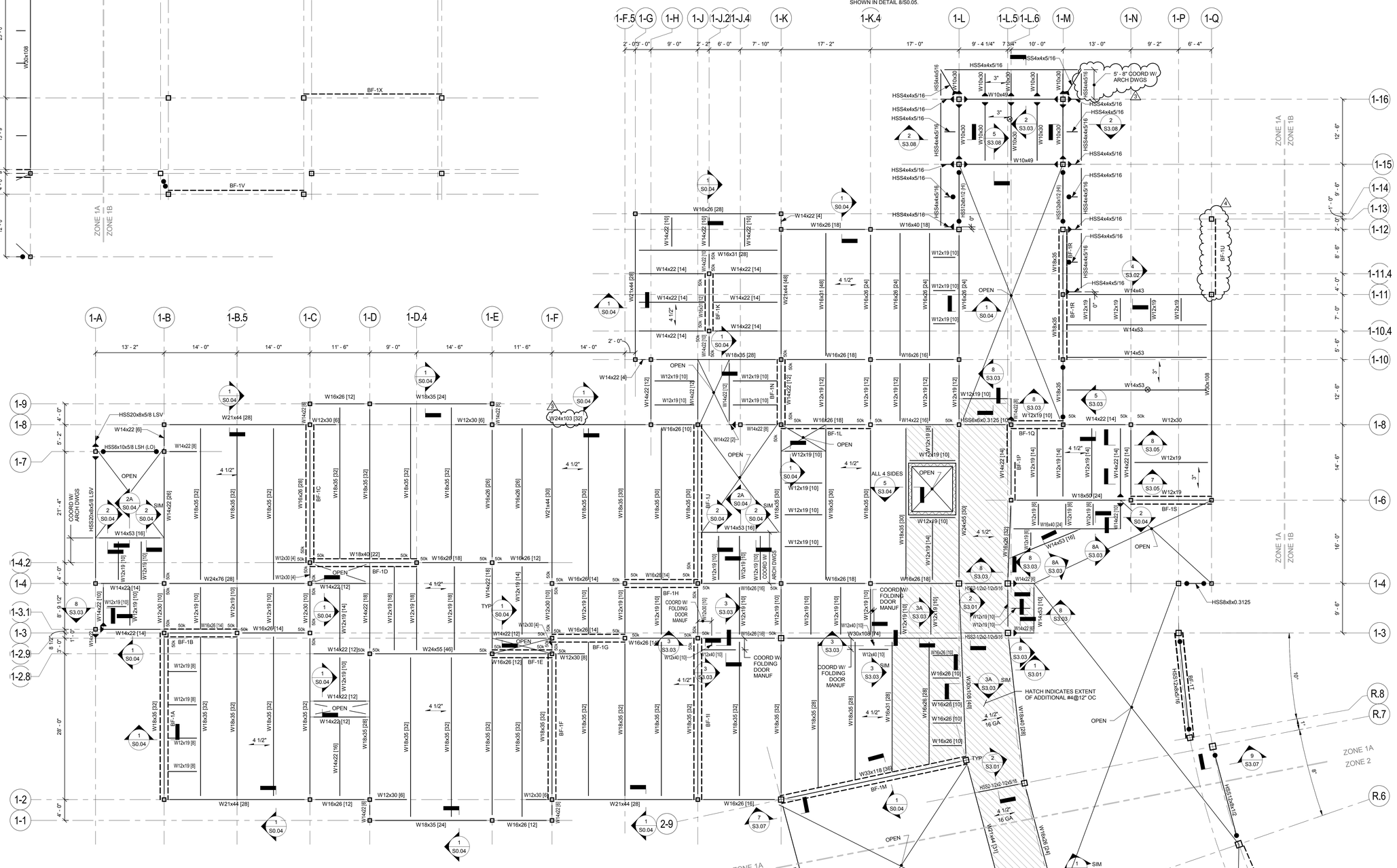

A13 architects
526 Boston Post Rd Wayland, MA
508.358.0790 www.ai3architects.com

EDG
Engineers Design Group Inc.
Structural Engineers
350 Main St. 2nd Flr
Malden, Ma 02148
(781)396-9007
(781)396-9008 (FAX)
EDG@EDGINC.COM

BEVERLY MIDDLE SCHOOL

CABOT STREET
BEVERLY, MA 01915

Copyright©2016 A13 Architects, LLC

BID PACKAGE #3
FOUNDATIONS, STRUCTURAL STEEL, & SITEWORK

NORTH ARROW | ADDENDUMIZED DRAWINGS

KEYPLAN

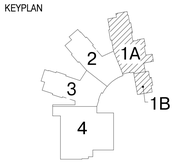

DRAWING NAME:

SECOND FLOOR FRAMING PLAN ZONE 1A AND 1B

DRAWN BY: DH
REVIEWED BY: CJO
SCALE: 1/8" = 1'-0"
JOB NO: 2014-076
DATE: April 18, 2016
DRAWING NUMER: S1.21

5/20/2016 1:21:19 PM C:\Users\DHarris\Documents\Beverly - 2016_18May2016_105624_dharris.rvt

FRAMING NOTES:

1) FOR GENERAL NOTES AND TYPICAL DETAILS, SEE DRAWINGS S0.01, S0.02, S0.03, S0.04, S0.05, AND S0.06.

2.) CT INDICATES A COLUMN TERMINATES AT THIS LEVEL.

3.) INDICATES A STRUCTURAL MASONRY PARTITION WALL BELOW. REFER TO RELEVANT SECTIONS FOR REINFORCING. REFER TO SEISMIC CLIPPING DETAIL 4 ON DRAWING S0.03. PROVIDE MINIMUM REINFORCEMENT PER DETAIL 1 ON DRAWING S0.03.
OR
OR

4.) BF-1 INDICATES A BRACED BAY TYPE, SEE DRAWINGS S4.01 THRU S4.08 FOR ELEVATIONS AND DETAILS.

5.) 4 1/2" INDICATES SPAN DIRECTION OF 2" DEEP, 18 GAGE, GALVANIZED COMPOSITE STEEL DECK WITH 2 1/2" NORMAL WEIGHT CONCRETE TOPPING. TOTAL THICKNESS = 4 1/2". REINFORCE WITH 6 x 6 - W2.9 x W2.9 WWF TYPICAL UNLESS NOTED OTHERWISE.

6.) 4 1/2" 16 GA INDICATES SPAN DIRECTION OF 2" DEEP, 16 GAGE, GALVANIZED COMPOSITE STEEL DECK WITH 2 1/2" NORMAL WEIGHT CONCRETE TOPPING. TOTAL THICKNESS = 4 1/2". REINFORCE WITH 6 x 6 - W2.9 x W2.9 WWF TYPICAL UNLESS NOTED OTHERWISE.

7.) 3" INDICATES SPAN OF 3" DEEP x 18 GA TYPE N, GALVANIZED STEEL ROOF DECK.

8.) 3" AC INDICATES SPAN OF 3" DEEP x 18 GA TYPE NCAS, GALVANIZED ACOUSTICAL CELLULAR STEEL ROOF DECK.

9.) 7" INDICATES SPAN OF 3" DEEP 18 GA TYPE N GALVANIZED COMPOSITE STEEL DECK WITH 4" LIGHTWEIGHT CONCRETE TOPPING. TOTAL THICKNESS = 7" REINFORCE WITH 6 x 6 - W2.9 x W2.9 WWF. SEE DETAIL 3/S0.05 FOR DECK SUPPORT. PROVIDE OPENING REINFORCING AS SHOWN IN DETAIL 8/S0.06.

10.) FOR EDGE OF SLAB/DECK DIMENSIONS, REFER TO ARCHITECTURAL DRAWINGS FOR ADDITIONAL INFORMATION. REFER TO DETAIL 1 ON DRAWING S0.04 UNLESS NOTED OTHERWISE ON PLANS.

11.) INDICATES A MOMENT CONNECTION TO DEVELOP THE FULL CAPACITY OF THE MEMBER. REFER TO TYPICAL DETAIL 5 AND 6 ON DRAWING S0.04.

12.) INDICATES WELD ALL AROUND, REFER TO TYPICAL DETAIL 8 ON DRAWING S0.04.

13.) WF INDICATES A BENT STEEL BEAM, REFER TO DETAILS 8 AND 9 ON DRAWING S0.05.

14.) < X" > INDICATES UPWARD CAMBER AT THE MID-SPAN OF THE MEMBER.

15.) [XX] INDICATES THE NUMBER OF 3/4" DIAMETER x 4" LONG HEADED STUDS WELDED TO THE TOP FLANGE OF THE BEAM. SPACE STUDS EVENLY ALONG THE BEAM UNLESS NOTED OTHERWISE.

16.) FOR EXACT NUMBER, SIZE, AND LOCATION OF OPENINGS IN STEEL DECKING, REFER TO MECHANICAL AND ARCHITECTURAL DRAWINGS. FOR FRAMING REFER TO DETAIL 4 ON DRAWING S0.04 AND DETAILS 1, 2, AND 3 ON DRAWING S0.06.

17.) REFER TO ARCHITECTURAL DRAWINGS FOR ELEVATIONS AND VERTICAL DIMENSIONS. PITCH ALL STEEL UNIFORMLY TO LOW POINTS AT THE COLUMNS AND BENT BEAMS AS SHOWN ON THE ARCHITECTURAL DRAWINGS.

18.) INDICATES A ROOF DRAIN, REFER TO DETAIL 1, 2, AND 3 ON DRAWING S0.06 FOR DECK SUPPORT. REFER TO ARCHITECTURAL AND PLUMBING DRAWINGS FOR EXACT LOCATIONS.

19.) FOR DIMENSIONS AND ELEVATIONS NOT GIVEN REFER TO ARCHITECTURAL DRAWINGS.

20.) 50k INDICATES A SHEAR TAB CONNECTION DESIGNED FOR AN UNFACTORED AXIAL SEISMIC FORCE OF ± 50 KIPS.

FRAMING ELEVATION NOTES:

1) REFER TO GRADING PLANS C3.1 THROUGH C3.5 FOR FLOOR ELEVATIONS. THE STRUCTURAL DRAWINGS USE A DATUM ELEVATION OF 100' - 0".

2) COORDINATE ALL ELEVATIONS WITH ARCHITECTURAL DRAWINGS.

3) SLOPE STEEL UNIFORMLY TO COLUMN OR BENT BEAM ELEVATIONS SHOWN ON PLAN.

4) COORDINATE COLUMN ELEVATIONS WITH ROOF DRAINS, REFER TO ARCHITECTURAL DRAWINGS.

5) BOTTOM OF DECK ELEVATION TO BE 113' - 7-1/2" UNLESS NOTED OTHERWISE AS THUS (XX' - XX"), +/- (XX'-XX"), OR (HI / LO).

6) BOTTOM OF DECK ELEVATION TO BE XX' - XX" BETWEEN GRIDLINES G AND L.5 UNLESS NOTED OTHERWISE AS THUS (XX' - XX"),+/- (XX'-XX"), OR (HI / LO).

7) BOTTOM OF DECK ELEVATION TO BE XX' - XX" FOR THE ROOF AREA BOUNDED BY GRIDS E.5 AND17 AND GRIDLINES G AND 12 UNLESS NOTED OTHERWISE AS THUS (XX' - XX"),+/- (XX'-XX"), OR (HI / LO).

8) BOTTOM OF DECK ELEVATION TO BE XX' - XX" BETWEEN GRIDLINE D AND E UNLESS NOTED OTHERWISE AS THUS (XX' - XX"),+/- (XX'-XX"), OR (HI / LO).

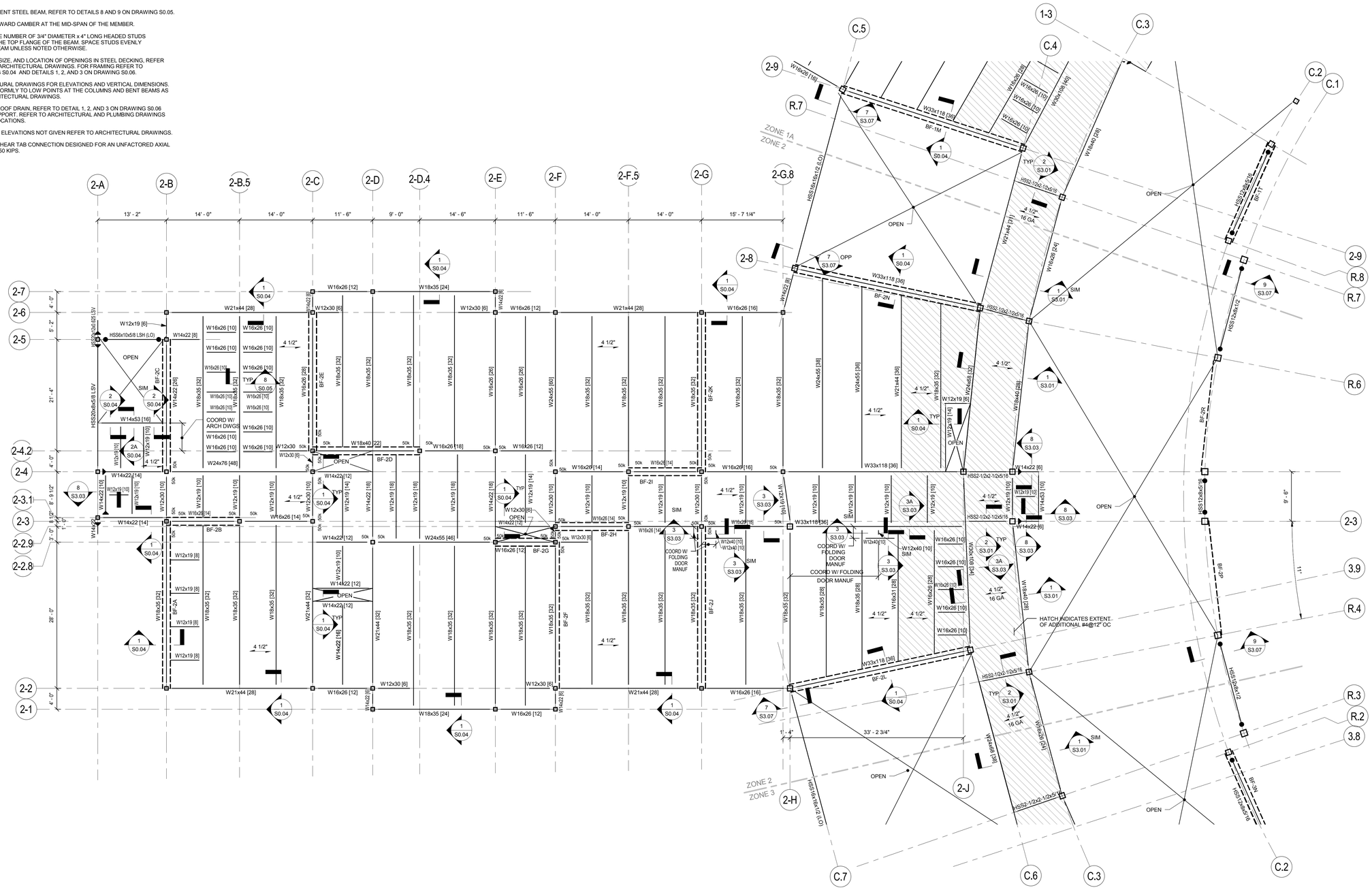

526 Boston Post Rd Wayland, MA
508.358.0790 www.ai3architects.com

Engineers Design Group Inc.
Structural Engineers
350 Main St, 2nd Flr
Malden, Ma 02148
(781)396-9007
(781)396-9008 (FAX)
EDG@EDGINC.COM

Copyright©2016 AI3 Architects, LLC

BEVERLY MIDDLE SCHOOL

CABOT STREET
BEVERLY, MA 01915

BID PACKAGE #3
FOUNDATIONS, STRUCTURAL STEEL, & SITEWORK

NORTH ARROW

ADDENDUMIZED DRAWINGS

KEYPLAN

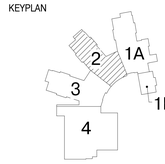

DRAWING NAME:

SECOND FLOOR FRAMING PLAN ZONE 2

DRAWN BY: DH

REVIEWED BY: CJO

SCALE: 1/8" = 1'-0"

JOB NO: 2014-076

DATE: April 18, 2016

DRAWING NUMER: S1.22

5/20/2016 1:21:19 PM C:\Users\DHarris\Documents\Beverly - 2016_18May2016_105624_dharris.rvt

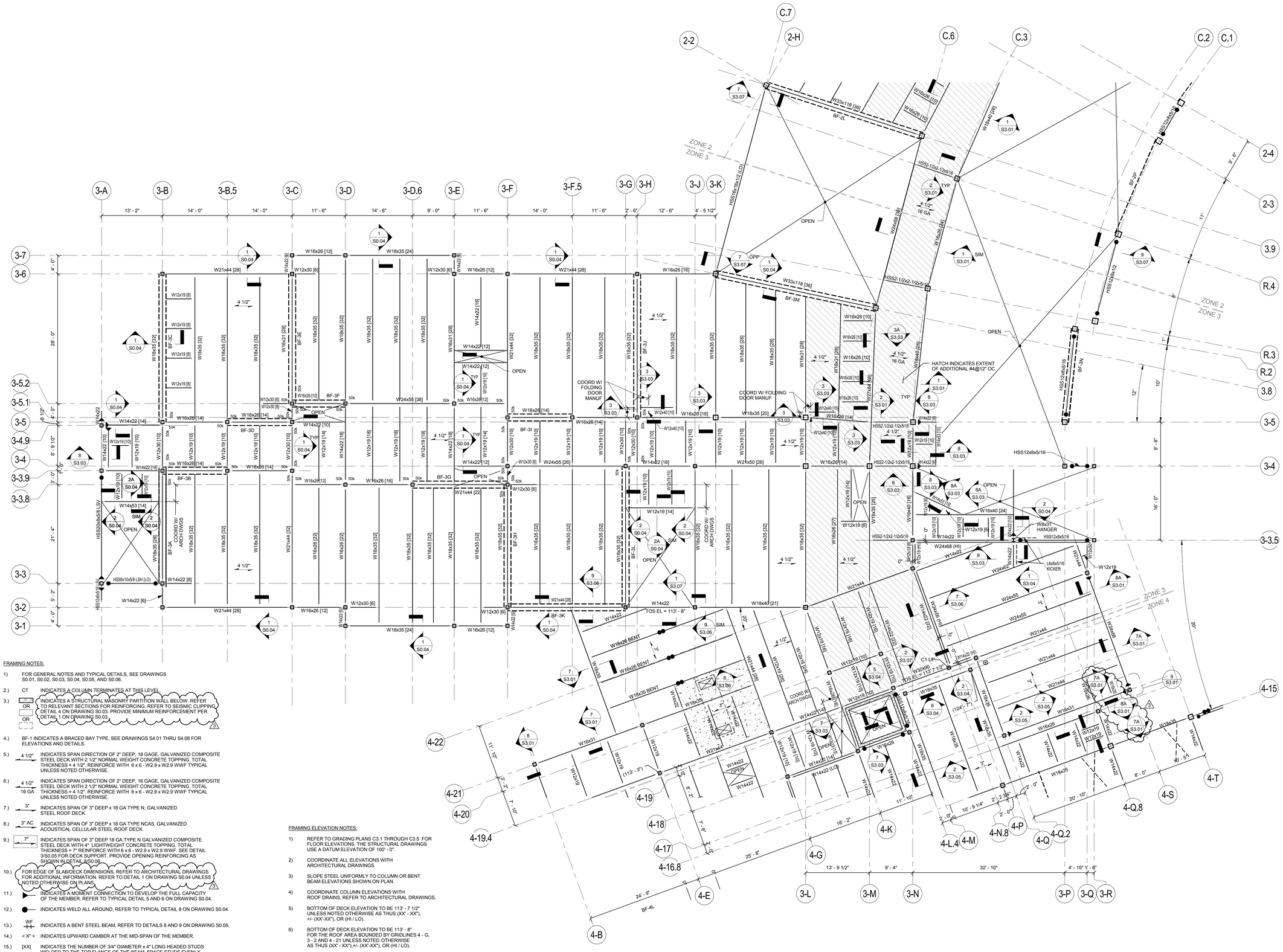

FRAMING NOTES:

1) FOR GENERAL NOTES AND TYPICAL DETAILS, SEE DRAWINGS S0.01, S0.02, S0.03, S0.04, S0.05, AND S0.06.

2.) CT — INDICATES A COLUMN TERMINATES AT THIS LEVEL

3.) OR / OR — INDICATES A STRUCTURAL MASONRY PARTITION WALL BELOW. REFER TO RELEVANT SECTIONS FOR REINFORCING. REFER TO SEISMIC CLIPPING DETAIL 4 ON DRAWING S0.03. PROVIDE MINIMUM REINFORCEMENT PER DETAIL 1 ON DRAWING S0.03.

4.) BF-1 INDICATES A BRACED BAY TYPE, SEE DRAWINGS S4.01 THRU S4.08 FOR ELEVATIONS AND DETAILS.

5.) 4 1/2" — INDICATES SPAN DIRECTION OF 2" DEEP, 18 GAGE, GALVANIZED COMPOSITE STEEL DECK WITH 2 1/2" NORMAL WEIGHT CONCRETE TOPPING. TOTAL THICKNESS = 4 1/2". REINFORCE WITH 6 x 6 - W2.9 x W2.9 WWF TYPICAL UNLESS NOTED OTHERWISE.

6.) 4 1/2" / 16 GA — INDICATES SPAN DIRECTION OF 2" DEEP, 16 GAGE, GALVANIZED COMPOSITE STEEL DECK WITH 2 1/2" NORMAL WEIGHT CONCRETE TOPPING. TOTAL THICKNESS = 4 1/2". REINFORCE WITH 6 x 6 - W2.9 x W2.9 WWF TYPICAL UNLESS NOTED OTHERWISE.

7.) 3" — INDICATES SPAN OF 3" DEEP x 18 GA TYPE N, GALVANIZED STEEL ROOF DECK.

8.) 3" AC — INDICATES SPAN OF 3" DEEP x 18 GA TYPE NCAS, GALVANIZED ACOUSTICAL CELLULAR STEEL ROOF DECK.

9.) 7" — INDICATES SPAN OF 3" DEEP 18 GA TYPE N GALVANIZED COMPOSITE STEEL DECK WITH 4" LIGHTWEIGHT CONCRETE TOPPING. TOTAL THICKNESS = 7" REINFORCE WITH 6 x 6 - W2.9 x W2.9 WWF. SEE DETAIL 3/S0.05 FOR DECK SUPPORT. PROVIDE OPENING REINFORCING AS SHOWN IN DETAIL 8/S0.06.

10.) FOR EDGE OF SLAB/DECK DIMENSIONS, REFER TO ARCHITECTURAL DRAWINGS FOR ADDITIONAL INFORMATION. REFER TO DETAIL 1 ON DRAWING S0.04 UNLESS NOTED OTHERWISE ON PLANS.

11.) INDICATES A MOMENT CONNECTION TO DEVELOP THE FULL CAPACITY OF THE MEMBER. REFER TO TYPICAL DETAIL 5 AND 6 ON DRAWING S0.04.

12.) INDICATES WELD ALL AROUND, REFER TO TYPICAL DETAIL 8 ON DRAWING S0.04.

13.) WF — INDICATES A BENT STEEL BEAM, REFER TO DETAILS 8 AND 9 ON DRAWING S0.05.

14.) < X" > INDICATES UPWARD CAMBER AT THE MID-SPAN OF THE MEMBER.

15.) [XX] INDICATES THE NUMBER OF 3/4" DIAMETER x 4" LONG HEADED STUDS WELDED TO THE TOP FLANGE OF THE BEAM. SPACE STUDS EVENLY ALONG THE BEAM UNLESS NOTED OTHERWISE.

16.) FOR EXACT NUMBER, SIZE, AND LOCATION OF OPENINGS IN STEEL DECKING, REFER TO MECHANICAL AND ARCHITECTURAL DRAWINGS. FOR FRAMING REFER TO DETAIL 4 ON DRAWING S0.04 AND DETAILS 1, 2, AND 3 ON DRAWING S0.06.

17.) REFER TO ARCHITECTURAL DRAWINGS FOR ELEVATIONS AND VERTICAL DIMENSIONS. PITCH ALL STEEL UNIFORMLY TO LOW POINTS AT THE COLUMNS AND BENT BEAMS AS SHOWN ON THE ARCHITECTURAL DRAWINGS.

18.) ⊗ INDICATES A ROOF DRAIN. REFER TO DETAIL 1, 2, AND 3 ON DRAWING S0.06 FOR DECK SUPPORT. REFER TO ARCHITECTURAL AND PLUMBING DRAWINGS FOR EXACT LOCATIONS.

19.) FOR DIMENSIONS AND ELEVATIONS NOT GIVEN REFER TO ARCHITECTURAL DRAWINGS.

20.) 50k — INDICATES A SHEAR TAB CONNECTION DESIGNED FOR AN UNFACTORED AXIAL SEISMIC FORCE OF ± 50 KIPS.

FRAMING ELEVATION NOTES:

1) REFER TO GRADING PLANS C3.1 THROUGH C3.5 FOR FLOOR ELEVATIONS. THE STRUCTURAL DRAWINGS USE A DATUM ELEVATION OF 100' - 0".

2) COORDINATE ALL ELEVATIONS WITH ARCHITECTURAL DRAWINGS.

3) SLOPE STEEL UNIFORMLY TO COLUMN OR BENT BEAM ELEVATIONS SHOWN ON PLAN.

4) COORDINATE COLUMN ELEVATIONS WITH ROOF DRAINS, REFER TO ARCHITECTURAL DRAWINGS.

5) BOTTOM OF DECK ELEVATION TO BE 113' - 7 1/2" UNLESS NOTED OTHERWISE AS THUS (XX' - XX"), +/- (XX'-XX"), OR (HI / LO).

6) BOTTOM OF DECK ELEVATION TO BE 113' - 8" FOR THE ROOF AREA BOUNDED BY GRIDLINES 4 - G, 3 - 2 AND 4 - 21 UNLESS NOTED OTHERWISE AS THUS (XX' - XX"),+/- (XX'-XX"), OR (HI / LO).

7) BOTTOM OF DECK ELEVATION TO BE 124' - 4" FOR THE ROOF AREA BOUNDED BY GRIDLINES CL3 - 3.5, 3 - N, 4 - N.8, 4 - Q, 4 - 17 AND 3 - S UNLESS NOTED OTHERWISE AS THUS (XX' - XX"),+/- (XX'-XX"), OR (HI / LO).

architects
526 Boston Post Rd Wayland, MA
508.358.0790 www.ai3architects.com

EDG
Engineers Design Group Inc.
Structural Engineers
350 Main St. 2nd Flr
Malden, Ma 02148
(781)396-9007
(781)396-9008 (FAX)
EDG@EDGINC.COM

BEVERLY MIDDLE SCHOOL

CABOT STREET
BEVERLY, MA 01915

Copyright©2016 A3 Architects, LLC

BID PACKAGE #3
FOUNDATIONS, STRUCTURAL STEEL, & SITEWORK

NORTH ARROW

ADDENDUMIZED DRAWINGS

KEYPLAN

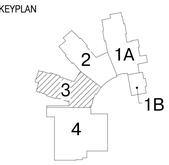

DRAWING NAME:

SECOND FLOOR FRAMING PLAN ZONE 3

DRAWN BY:	DH
REVIEWED BY:	CJO
SCALE: 1/8" = 1'-0"	DRAWING NUMER:
JOB NO: 2014-076	S1.23
DATE: April 18, 2016	

5/20/2016 1:21:24 PM C:\Users\DHarris\Documents\Beverly - 2016_18May2016_105624_dharris.rvt

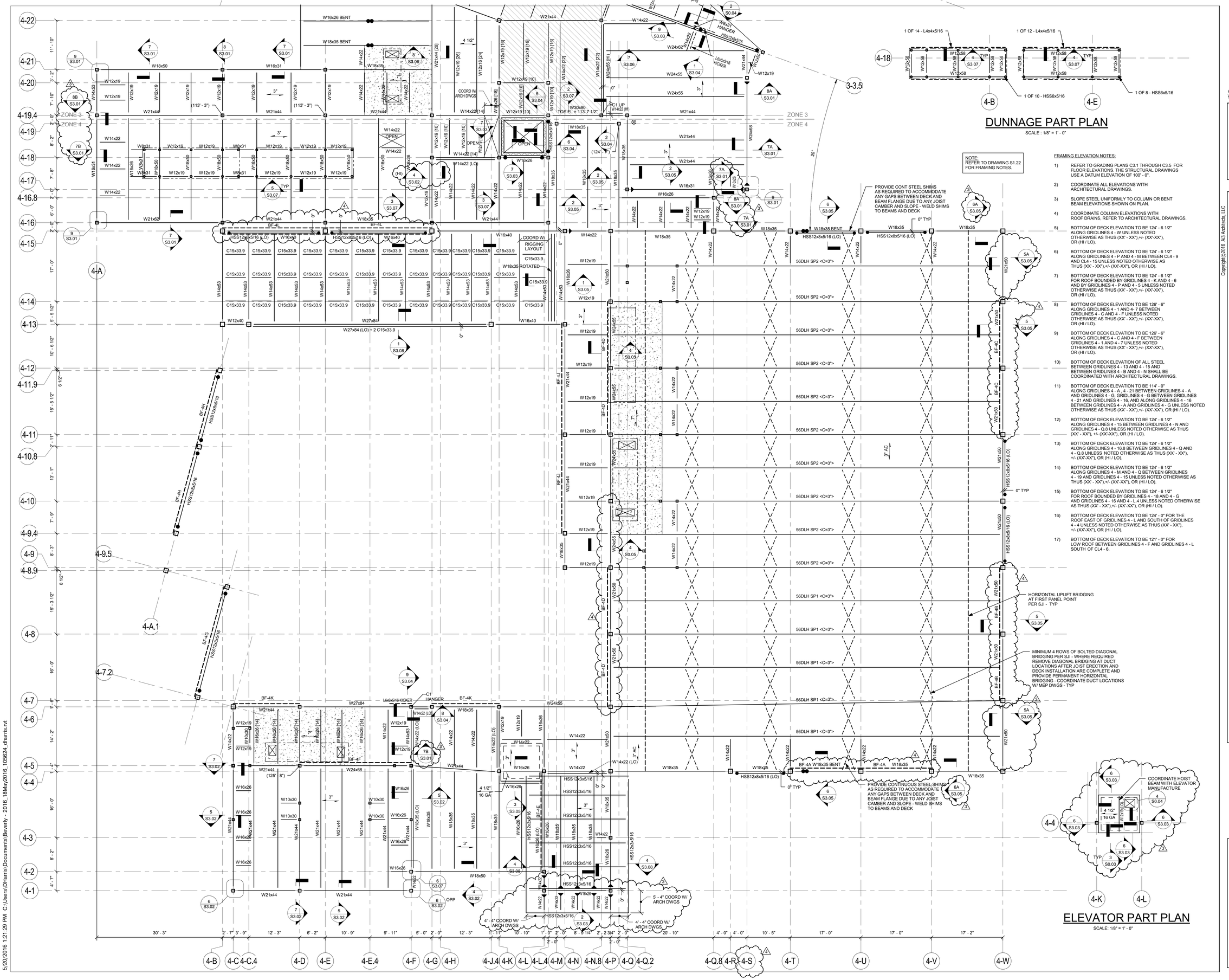

FRAMING ELEVATION NOTES:

1) REFER TO GRADING PLANS C3.1 THROUGH C3.5 FOR FLOOR ELEVATIONS. THE STRUCTURAL DRAWINGS USE A DATUM ELEVATION OF 100' - 0".

2) COORDINATE ALL ELEVATIONS WITH ARCHITECTURAL DRAWINGS.

3) SLOPE STEEL UNIFORMLY TO COLUMN OR BENT BEAM ELEVATIONS SHOWN ON PLAN.

4) COORDINATE COLUMN ELEVATIONS WITH ROOF DRAINS, REFER TO ARCHITECTURAL DRAWINGS.

5) BOTTOM OF DECK ELEVATION TO BE 124' - 6 1/2" ALONG GRIDLINES 4 - W UNLESS NOTED OTHERWISE AS THUS (XX' - XX"),+/- (XX'-XX"), OR (HI / LO).

6) BOTTOM OF DECK ELEVATION TO BE 124' - 6 1/2" ALONG GRIDLINES 4 - P AND 4 - M BETWEEN CL4 - 9 AND CL4 - 15 UNLESS NOTED OTHERWISE AS THUS (XX' - XX"),+/- (XX'-XX"), OR (HI / LO).

7) BOTTOM OF DECK ELEVATION TO BE 124' - 6 1/2" FOR ROOF BOUNDED BY GRIDLINES 4 - K AND 4 - 6 AND BY GRIDLINES 4 - P AND 4 - 5 UNLESS NOTED OTHERWISE AS THUS (XX' - XX"),+/- (XX'-XX"), OR (HI / LO).

8) BOTTOM OF DECK ELEVATION TO BE 126' - 6" ALONG GRIDLINES 4 - 1 AND 4- 7 BETWEEN GRIDLINES 4 - C AND 4 - F UNLESS NOTED OTHERWISE AS THUS (XX' - XX"),+/- (XX'-XX"), OR (HI / LO).

9) BOTTOM OF DECK ELEVATION TO BE 126' - 6" ALONG GRIDLINES 4 - C AND 4 - F BETWEEN GRIDLINES 4 - 1 AND 4 - 7 UNLESS NOTED OTHERWISE AS THUS (XX' - XX"),+/- (XX'-XX"), OR (HI / LO).

10) BOTTOM OF DECK ELEVATION OF ALL STEEL BETWEEN GRIDLINES 4 - 13 AND 4 - 15 AND BETWEEN GRIDLINES 4 - B AND 4 - N SHALL BE COORDINATED WITH ARCHITECTURAL DRAWINGS.

11) BOTTOM OF DECK ELEVATION TO BE 114' - 0" ALONG GRIDLINES 4 - A, 4 - 21 BETWEEN GRIDLINES 4 - A AND GRIDLINES 4 - G, GRIDLINES 4 - G BETWEEN GRIDLINES 4 - 21 AND GRIDLINES 4 - 16, AND ALONG GRIDLINES 4 - 16 BETWEEN GRIDLINES 4 - A AND GRIDLINES 4 - G UNLESS NOTED OTHERWISE AS THUS (XX' - XX"),+/- (XX'-XX"), OR (HI / LO).

12) BOTTOM OF DECK ELEVATION TO BE 124' - 6 1/2" ALONG GRIDLINES 4 - 15 BETWEEN GRIDLINES 4 - N AND GRIDLINES 4 - Q.8 UNLESS NOTED OTHERWISE AS THUS (XX' - XX"), +/- (XX'-XX"), OR (HI / LO).

13) BOTTOM OF DECK ELEVATION TO BE 124' - 6 1/2" ALONG GRIDLINES 4 - 16.8 BETWEEN GRIDLINES 4 - Q AND 4 - Q 8 UNLESS NOTED OTHERWISE AS THUS (XX' - XX"), +/- (XX'-XX"), OR (HI / LO).

14) BOTTOM OF DECK ELEVATION TO BE 124' - 6 1/2" ALONG GRIDLINES 4 - M AND 4 - Q BETWEEN GRIDLINES 4 - 19 AND GRIDLINES 4 - 15 UNLESS NOTED OTHERWISE AS THUS (XX' - XX"),+/- (XX'-XX"), OR (HI / LO).

15) BOTTOM OF DECK ELEVATION TO BE 124' - 6 1/2" FOR ROOF BOUNDED BY GRIDLINES 4 - 18 AND 4 - G AND GRIDLINES 4 - 16 AND 4 - L.4 UNLESS NOTED OTHERWISE AS THUS (XX' - XX"),+/- (XX'-XX"), OR (HI / LO).

16) BOTTOM OF DECK ELEVATION TO BE 124' - 0" FOR THE ROOF EAST OF GRIDLINES 4 - L AND SOUTH OF GRIDLINES 4 - 4 UNLESS NOTED OTHERWISE AS THUS (XX' - XX"), +/- (XX'-XX"), OR (HI / LO).

17) BOTTOM OF DECK ELEVATION TO BE 121' - 0" FOR LOW ROOF BETWEEN GRIDLINES 4 - F AND GRIDLINES 4 - L SOUTH OF CL4 - 6.

architects
526 Boston Post Rd Wayland, MA
508.358.0790 www.ai3architects.com

EDG
Engineers Design Group Inc.
Structural Engineers
350 Main St. 2nd Flr
Malden, Ma 02148
(781)396-9007
(781)396-9008 (FAX)
EDG@EDGINC.COM

BEVERLY MIDDLE SCHOOL

CABOT STREET
BEVERLY, MA 01915

Copyright©2016 AI3 Architects, LLC

BID PACKAGE #3
FOUNDATIONS, STRUCTURAL STEEL, & SITEWORK

NORTH ARROW | ADDENDUMIZED DRAWINGS

KEYPLAN

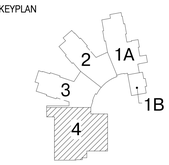

DRAWING NAME:

SECOND FLOOR FRAMING PLAN ZONE 4

DRAWN BY:	DH
REVIEWED BY:	CJO
SCALE: 1/8" = 1'-0"	DRAWING NUMER:
JOB NO: 2014-076	S1.24
DATE: April 18, 2016	

5/20/2016 1:21:29 PM C:\Users\DHarris\Documents\Beverly - 2016_18May2016_105624_dharris.rvt

FRAMING ELEVATION NOTES:

1) REFER TO GRADING PLANS C3.1 THROUGH C3.5. FOR FLOOR ELEVATIONS. THE STRUCTURAL DRAWINGS USE A DATUM ELEVATION OF 100' - 0".

2) COORDINATE ALL ELEVATIONS WITH ARCHITECTURAL DRAWINGS.

3) SLOPE STEEL UNIFORMLY TO COLUMN OR BENT BEAM ELEVATIONS SHOWN ON PLAN.

4) COORDINATE COLUMN ELEVATIONS WITH ROOF DRAINS, REFER TO ARCHITECTURAL DRAWINGS.

5) BOTTOM OF DECK ELEVATION TO BE 127' - 7 1/2" UNLESS NOTED OTHERWISE AS THUS (XX' - XX"), +/- (XX'-XX"), OR (HI / LO).

6) BOTTOM OF DECK ELEVATION TO BE 127' - 0" ALONG GRIDLINES 1 - H BETWEEN GRIDLINES 1 - 8 AND 1 - 10, ALONG GRIDLINES 1 - 10 BETWEEN GRIDLINES 1 - G AND 1 - H ALONG GRIDLINES 1 - G BETWEEN GRIDLINE 1 - 10 AND 1 - 13, ALONG GRIDLINE 1 - K BETWEEN GRIDLINES 1 - 14 AND 1 - 12, ALONG GRIDLINE 1 - 13 BETWEEN GRIDLINES 1 - K AND 1 - L, AND ALONG GRIDLINE 1 - L BETWEEN GRIDLINES 1 - 8 AND 1 - 12 UNLESS NOTED OTHERWISE AS THUS (XX' - XX"),+/- (XX'-XX"), OR (HI / LO).

7) BOTTOM OF DECK ELEVATION TO BE 125' - 8" ALONG GRIDLINES 1 - 15 AND 1 - 5 BETWEEN GRIDLINE 1 - R AND GRIDLINE 1 - S AND ALONG GRIDLINE 1 - R AND 1 - S BETWEEN GRIDLINES 1 - 15 AND 1 - 11 AND ALONG GRIDLINE 1 - R AND 1 - S BETWEEN GRIDLINE 1 - 5 AND 1 - 8 UNLESS NOTED OTHERWISE AS THUS (XX' - XX"),+/- (XX'-XX"), OR (HI / LO).

8) BOTTOM OF DECK ELEVATION TO BE 121' - 1" ALONG GRIDLINE 1 - 13 BETWEEN GRIDLINES 1 - Q AND 1 - Q.9 AND BETWEEN GRIDLINES 1 - S AND 1 - T UNLESS NOTED OTHERWISE AS THUS (XX' - XX"),+/- (XX'-XX"), OR (HI / LO).

9) BOTTOM OF DECK ELEVATION TO BE 121' - 1" ALONG GRIDLINE 1 - 6 BETWEEN GRIDLINE 1 - Q AND 1 - Q.9 AND BETWEEN GRIDLINE 1 - S AND 1 - T UNLESS NOTED OTHERWISE AS THUS (XX' - XX"), +/- (XX'-XX"), OR (HI / LO).

10) BOTTOM OF DECK ELEVATION TO BE 127' - 0" NORTH OF GRIDLINE 1 - 8 BETWEEN GRIDLINES 1 - C AND 1 - E UNLESS NOTED OTHERWISE AS THUS (XX' - XX"), +/- (XX'-XX"), OR (HI / LO).

11) BOTTOM OF DECK ELEVATION TO BE 121' - 1" ALONG GRIDLINES1 - Q AND CL1 - T BETWEEN GRIDLINES 1 - 13 AND 1 - 6 UNLESS NOTED OTHERWISE AS THUS (XX' - XX"), +/- (XX'-XX"), OR (HI / LO).

12) BOTTOM OF DECK ELEVATION TO BE XX' - XX" BETWEEN GRIDLINES 1 - L AND 1 - M NORTH OF GRIDLINE 1 - 8 UNLESS NOTED OTHERWISE AS THUS (XX' - XX"), +/- (XX'-XX"), OR (HI / LO).

FRAMING NOTES:

1) FOR GENERAL NOTES AND TYPICAL DETAILS, SEE DRAWINGS S0.01, S0.02, S0.03, S0.04, AND S0.05.

2.) CT — INDICATES A COLUMN TERMINATES AT THIS LEVEL.

3.) OR / OR — INDICATES A STRUCTURAL MASONRY PARTITION WALL BELOW. REFER TO RELEVANT SECTIONS FOR REINFORCING. REFER TO SEISMIC CLIPPING DETAIL X ON DRAWING S0.0X AND DETAIL X ON DRAWING S0.0X FOR CONNECTION TO STEEL. PROVIDE MINIMUM REINFORCEMENT PER DETAIL X ON DRAWING S0.0X.

4.) BF-1 INDICATES A BRACED BAY TYPE, SEE DRAWINGS S4.01, S4.02, S4.03 AND S4.04 FOR ELEVATIONS AND DETAILS.

5.) 4 1/2" — INDICATES SPAN DIRECTION OF 2" DEEP, 18 GAGE, GALVANIZED COMPOSITE STEEL DECK WITH 2 1/2" NORMAL WEIGHT CONCRETE TOPPING. TOTAL THICKNESS = 4 1/2". REINFORCE WITH 6 x 6 - W2.9 x W2.9 WWF TYPICAL UNLESS NOTED OTHERWISE.

6.) 4 1/2" 16 GA — INDICATES SPAN DIRECTION OF 2" DEEP, 16 GAGE, GALVANIZED COMPOSITE STEEL DECK WITH 2 1/2" NORMAL WEIGHT CONCRETE TOPPING. TOTAL THICKNESS = 4 1/2". REINFORCE WITH 6 x 6 - W2.9 x W2.9 WWF TYPICAL UNLESS NOTED OTHERWISE.

7.) 3" — INDICATES SPAN OF 3" DEEP x 18 GA TYPE N, GALVANIZED STEEL ROOF DECK.

8.) 3" AC — INDICATES SPAN OF 3" DEEP x 18 GA TYPE NCAS, GALVANIZED ACOUSTICAL CELLULAR STEEL ROOF DECK.

9.) 7" — INDICATES SPAN OF 3" DEEP 18 GA TYPE N GALVANIZED COMPOSITE STEEL DECK WITH 4" LIGHTWEIGHT CONCRETE TOPPING. TOTAL THICKNESS = 7" REINFORCE WITH 6 x 6 - W2.9 x W2.9 WWF. SEE DETAIL 3/S0.05 FOR DECK SUPPORT. PROVIDE OPENING REINFORCING AS SHOWN IN DETAIL 8/S0.05.

10.) FOR EDGE OF SLAB/DECK DIMENSIONS, REFER TO ARCHITECTURAL DRAWINGS FOR ADDITIONAL INFORMATION. REFER TO DETAIL X ON DRAWING S0.0X AND DETAIL X ON DRAWING S0.0X UNLESS NOTED OTHERWISE ON PLANS.

11.) INDICATES A MOMENT CONNECTION TO DEVELOP THE FULL CAPACITY OF THE MEMBER. REFER TO TYPICAL DETAIL X ON DRAWING S0.0X.

12.) INDICATES WELD ALL AROUND, REFER TO TYPICAL DETAIL X ON DRAWING S0.0X.

13.) WF — INDICATES A BENT STEEL BEAM, REFER TO DETAILS 8 AND 9 ON DRAWING S0-0-6.

14.) < X" > INDICATES UPWARD CAMBER AT THE MID-SPAN OF THE MEMBER.

15.) [XX] INDICATES THE NUMBER OF 3/4" DIAMETER x 4" LONG HEADED STUDS WELDED TO THE TOP FLANGE OF THE BEAM. SPACE STUDS EVENLY ALONG THE BEAM UNLESS NOTED OTHERWISE.

16.) FOR EXACT NUMBER, SIZE, AND LOCATION OF OPENINGS IN STEEL DECKING, REFER TO MECHANICAL AND ARCHITECTURAL DRAWINGS. FOR FRAMING REFER TO DETAIL X ON DRAWING S0.0X AND DETAILS X AND X ON DRAWING S0.0X.

17.) REFER TO ARCHITECTURAL DRAWINGS FOR ELEVATIONS AND VERTICAL DIMENSIONS. PITCH ALL STEEL UNIFORMLY TO LOW POINTS AT THE COLUMNS AND BENT BEAMS AS SHOWN ON THE ARCHITECTURAL DRAWINGS.

18.) INDICATES A ROOF DRAIN, REFER TO DETAIL X ON DRAWING S0.0X AND DETAIL X ON DRAWING S0.0X FOR DECK SUPPORT. REFER TO ARCHITECTURAL AND PLUMBING DRAWINGS FOR EXACT LOCATIONS.

19.) FOR DIMENSIONS AND ELEVATIONS NOT GIVEN REFER TO ARCHITECTURAL DRAWINGS.

20.) 50k — INDICATES A SHEAR TAB CONNECTION DESIGNED FOR AN UNFACTORED AXIAL SEISMIC FORCE OF ± 50 KIPS.

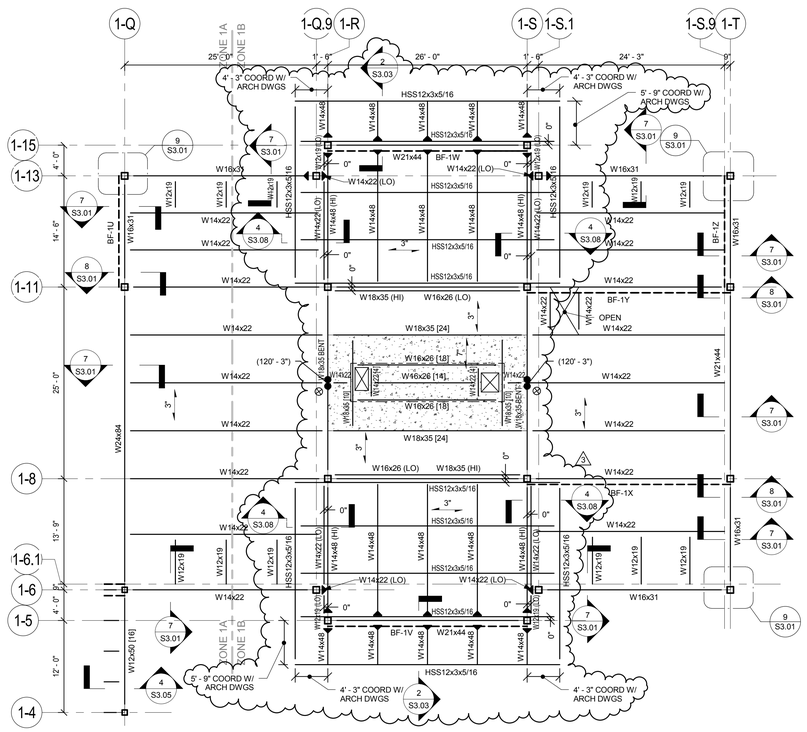

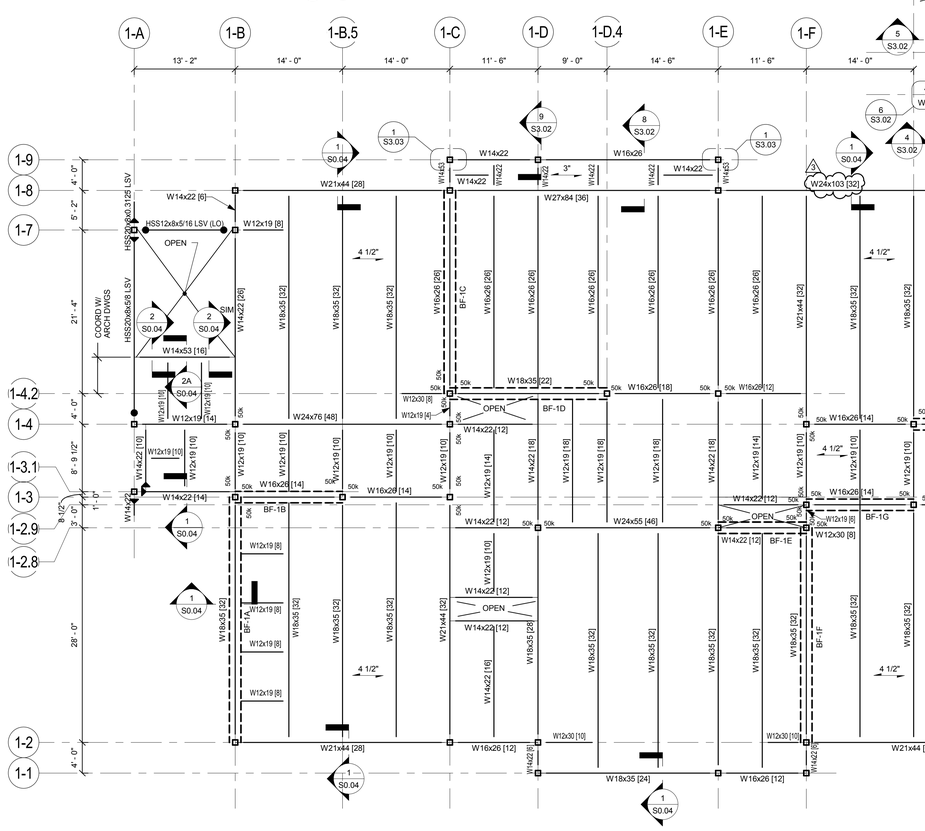

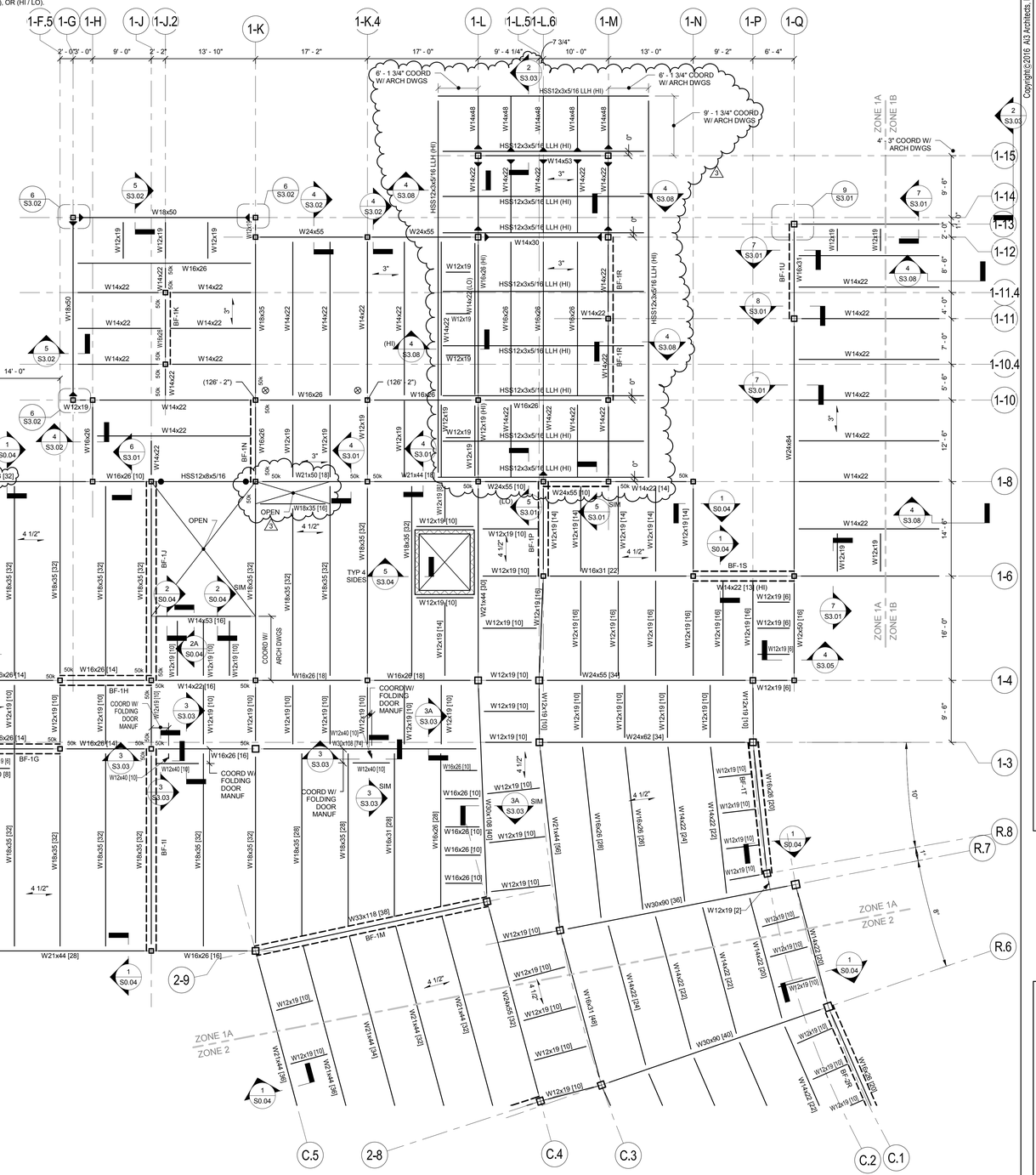

A3 architects
526 Boston Post Rd Wayland, MA
508.358.0790 www.a3architects.com

EDG Engineers Design Group Inc.
Structural Engineers
350 Main St. 2nd Flr
Malden, Ma 02148
(781)396-9007
(781)396-9008 (FAX)
EDG@EDGINC.COM

Copyright©2016 A3 Architects, LLC

BEVERLY MIDDLE SCHOOL

CABOT STREET
BEVERLY, MA 01915

BID PACKAGE #3
FOUNDATIONS, STRUCTURAL STEEL, & SITEWORK

NORTH ARROW | ADDENDUMIZED DRAWINGS

KEYPLAN

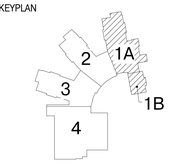

DRAWING NAME:

THIRD FLOOR FRAMING PLAN ZONE 1A AND 1B

DRAWN BY: DH
REVIEWED BY: CJO
SCALE: 1/8" = 1'-0"
JOB NO: 2014-076
DATE: April 18, 2016
DRAWING NUMER: S1.31

5/20/2016 1:21:35 PM C:\Users\DHarris\Documents\Beverly - 2016_18May2016_105624_dharris.rvt

FRAMING NOTES:

1) FOR GENERAL NOTES AND TYPICAL DETAILS, SEE DRAWINGS S0.01, S0.02, S0.03, S0.04, S0.05, AND S0.06.

2.) CT — INDICATES A COLUMN TERMINATES AT THIS LEVEL.

3.) OR OR — INDICATES A STRUCTURAL MASONRY PARTITION WALL BELOW. REFER TO RELEVANT SECTIONS FOR REINFORCING. REFER TO SEISMIC CLIPPING DETAIL 4 ON DRAWING S0.03. PROVIDE MINIMUM REINFORCEMENT PER DETAIL 1 ON DRAWING S0.03. 3

4.) BF-1 INDICATES A BRACED BAY TYPE, SEE DRAWINGS S4.01 THRU S4.08 FOR ELEVATIONS AND DETAILS.

5.) 4 1/2" — INDICATES SPAN DIRECTION OF 2" DEEP, 18 GAGE, GALVANIZED COMPOSITE STEEL DECK WITH 2 1/2" NORMAL WEIGHT CONCRETE TOPPING. TOTAL THICKNESS = 4 1/2". REINFORCE WITH 6 x 6 - W2.9 x W2.9 WWF TYPICAL UNLESS NOTED OTHERWISE.

6.) 4 1/2" 16 GA — INDICATES SPAN DIRECTION OF 2" DEEP. 16 GAGE. GALVANIZED COMPOSITE STEEL DECK WITH 2 1/2" NORMAL WEIGHT CONCRETE TOPPING. TOTAL THICKNESS = 4 1/2". REINFORCE WITH 6 x 6 - W2.9 x W2.9 WWF TYPICAL UNLESS NOTED OTHERWISE.

7.) 3" — INDICATES SPAN OF 3" DEEP x 18 GA TYPE N, GALVANIZED STEEL ROOF DECK.

8.) 3" AC — INDICATES SPAN OF 3" DEEP x 18 GA TYPE NCAS, GALVANIZED ACOUSTICAL CELLULAR STEEL ROOF DECK.

9.) 7" — INDICATES SPAN OF 3" DEEP 18 GA TYPE N GALVANIZED COMPOSITE STEEL DECK WITH 4" LIGHTWEIGHT CONCRETE TOPPING. TOTAL THICKNESS = 7" REINFORCE WITH 6 x 6 - W2.9 x W2.9 WWF. SEE DETAIL 3/S0.05 FOR DECK SUPPORT. PROVIDE OPENING REINFORCING AS SHOWN IN DETAIL 8/S0.06.

10.) FOR EDGE OF SLAB/DECK DIMENSIONS, REFER TO ARCHITECTURAL DRAWINGS FOR ADDITIONAL INFORMATION. REFER TO DETAIL 1 ON DRAWING S0.04 UNLESS NOTED OTHERWISE ON PLANS. 3

11.) INDICATES A MOMENT CONNECTION TO DEVELOP THE FULL CAPACITY OF THE MEMBER. REFER TO TYPICAL DETAIL 5 AND 6 ON DRAWING S0.04.

12.) INDICATES WELD ALL AROUND, REFER TO TYPICAL DETAIL 8 ON DRAWING S0.04.

13.) WF — INDICATES A BENT STEEL BEAM, REFER TO DETAILS 8 AND 9 ON DRAWING S0.05.

14.) < X" > INDICATES UPWARD CAMBER AT THE MID-SPAN OF THE MEMBER.

15.) [XX] INDICATES THE NUMBER OF 3/4" DIAMETER x 4" LONG HEADED STUDS WELDED TO THE TOP FLANGE OF THE BEAM. SPACE STUDS EVENLY ALONG THE BEAM UNLESS NOTED OTHERWISE.

16.) FOR EXACT NUMBER, SIZE, AND LOCATION OF OPENINGS IN STEEL DECKING, REFER TO MECHANICAL AND ARCHITECTURAL DRAWINGS. FOR FRAMING REFER TO DETAIL 4 ON DRAWING S0.04 AND DETAILS 1, 2, AND 3 ON DRAWING S0.06.

17.) REFER TO ARCHITECTURAL DRAWINGS FOR ELEVATIONS AND VERTICAL DIMENSIONS. PITCH ALL STEEL UNIFORMLY TO LOW POINTS AT THE COLUMNS AND BENT BEAMS AS SHOWN ON THE ARCHITECTURAL DRAWINGS.

18.) ⊗ INDICATES A ROOF DRAIN, REFER TO DETAIL 1, 2, AND 3 ON DRAWING S0.06 FOR DECK SUPPORT. REFER TO ARCHITECTURAL AND PLUMBING DRAWINGS FOR EXACT LOCATIONS.

19.) FOR DIMENSIONS AND ELEVATIONS NOT GIVEN REFER TO ARCHITECTURAL DRAWINGS.

20.) 50k INDICATES A SHEAR TAB CONNECTION DESIGNED FOR AN UNFACTORED AXIAL SEISMIC FORCE OF ± 50 KIPS.

FRAMING ELEVATION NOTES:

1) REFER TO GRADING PLANS C3.1 THROUGH C3.5 FOR FLOOR ELEVATIONS. THE STRUCTURAL DRAWINGS USE A DATUM ELEVATION OF 100' - 0".

2) COORDINATE ALL ELEVATIONS WITH ARCHITECTURAL DRAWINGS.

3) SLOPE STEEL UNIFORMLY TO COLUMN OR BENT BEAM ELEVATIONS SHOWN ON PLAN.

4) COORDINATE COLUMN ELEVATIONS WITH ROOF DRAINS, REFER TO ARCHITECTURAL DRAWINGS.

5) BOTTOM OF DECK ELEVATION TO BE 127' - 7-1/2" UNLESS NOTED OTHERWISE AS THUS (XX' - XX"), +/- (XX'-XX"), OR (HI / LO).

6) BOTTOM OF DECK ELEVATION TO BE 127' - 0" NORTH OF GRIDLINE 2 - 7 BETWEEN GRIDLINES 2 - C AND 2 - E UNLESS NOTED OTHERWISE AS THUS (XX' - XX"), +/- (XX'-XX"), OR (HI / LO).

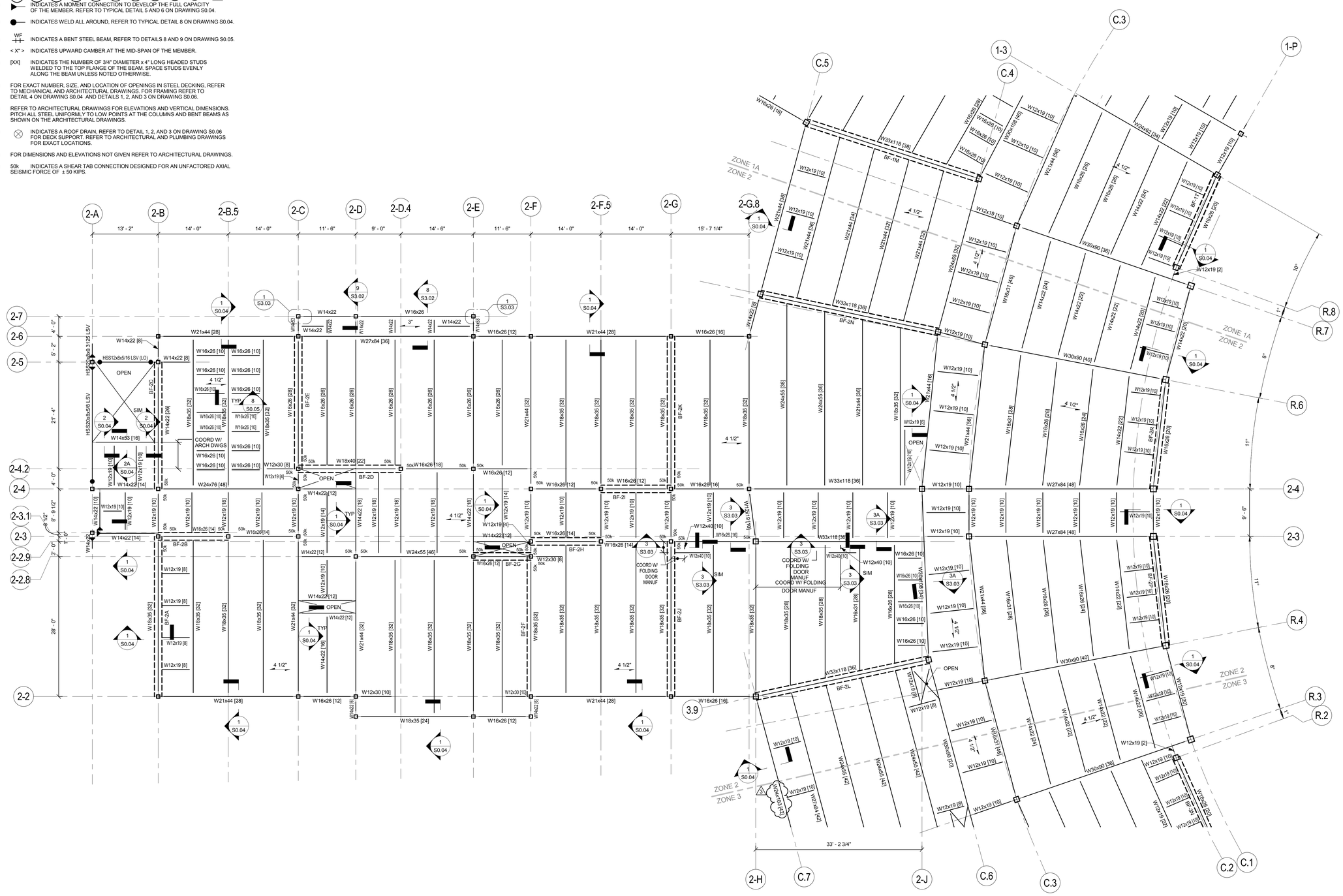

Ai3 architects
526 Boston Post Rd Wayland, MA
508.358.0790 www.ai3architects.com

EDG
Engineers Design Group Inc.
Structural Engineers
350 Main St. 2nd Flr
Malden, Ma 02148
(781)396-9007
(781)396-9008 (FAX)
EDG@EDGINC.COM

Copyright©2016 Ai3 Architects, LLC

BEVERLY MIDDLE SCHOOL

CABOT STREET
BEVERLY, MA 01915

BID PACKAGE #3
FOUNDATIONS, STRUCTURAL STEEL, & SITEWORK

NORTH ARROW | ADDENDUMIZED DRAWINGS

KEYPLAN

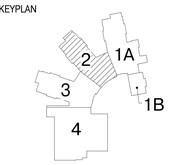

DRAWING NAME:

THIRD FLOOR FRAMING PLAN ZONE 2

DRAWN BY: DH
REVIEWED BY: CJO
SCALE: 1/8" = 1'-0"
JOB NO: 2014-076
DATE: April 18, 2016
DRAWING NUMER: S1.32

5/20/2016 1:21:39 PM C:\Users\DHarris\Documents\Beverly - 2016_18May2016_105624_dharris.rvt

FRAMING NOTES:

1) FOR GENERAL NOTES AND TYPICAL DETAILS, SEE DRAWINGS S0.01, S0.02, S0.03, S0.04, AND S0.05.

2.) CT — INDICATES A COLUMN TERMINATES AT THIS LEVEL.

3.) OR — INDICATES A STRUCTURAL MASONRY PARTITION WALL BELOW. REFER TO RELEVANT SECTIONS FOR REINFORCING. REFER TO SEISMIC CLIPPING DETAIL X ON DRAWING S0.0X AND DETAIL X ON DRAWING S0.0X FOR CONNECTION TO STEEL. PROVIDE MINIMUM REINFORCEMENT PER DETAIL X ON DRAWING S0.0X.

4.) BF-1 INDICATES A BRACED BAY TYPE, SEE DRAWINGS S4.01, S4.02, S4.03 AND S4.04 FOR ELEVATIONS AND DETAILS.

5.) 4 1/2" — INDICATES SPAN DIRECTION OF 2" DEEP, 18 GAGE, GALVANIZED COMPOSITE STEEL DECK WITH 2 1/2" NORMAL WEIGHT CONCRETE TOPPING. TOTAL THICKNESS = 4 1/2". REINFORCE WITH 6 x 6 - W2.9 x W2.9 WWF TYPICAL UNLESS NOTED OTHERWISE.

6.) 4 1/2" 16 GA — INDICATES SPAN DIRECTION OF 2" DEEP, 16 GAGE, GALVANIZED COMPOSITE STEEL DECK WITH 2 1/2" NORMAL WEIGHT CONCRETE TOPPING. TOTAL THICKNESS = 4 1/2". REINFORCE WITH 6 x 6 - W2.9 x W2.9 WWF TYPICAL UNLESS NOTED OTHERWISE.

7.) 3" — INDICATES SPAN OF 3" DEEP x 18 GA TYPE N, GALVANIZED STEEL ROOF DECK.

8.) 3" AC — INDICATES SPAN OF 3" DEEP x 18 GA TYPE NCAS, GALVANIZED ACOUSTICAL CELLULAR STEEL ROOF DECK.

9.) 7" — INDICATES SPAN OF 3" DEEP 18 GA TYPE N GALVANIZED COMPOSITE STEEL DECK WITH 4" LIGHTWEIGHT CONCRETE TOPPING. TOTAL THICKNESS = 7" REINFORCE WITH 6 x 6 - W2.9 x W2.9 WWF. SEE DETAIL 3/S0.05 FOR DECK SUPPORT. PROVIDE OPENING REINFORCING AS SHOWN IN DETAIL 8/S0.05.

10.) FOR EDGE OF SLAB/DECK DIMENSIONS, REFER TO ARCHITECTURAL DRAWINGS FOR ADDITIONAL INFORMATION. REFER TO DETAIL X ON DRAWING S0.0X AND DETAIL X ON DRAWING S0.0X UNLESS NOTED OTHERWISE ON PLANS.

11.) INDICATES A MOMENT CONNECTION TO DEVELOP THE FULL CAPACITY OF THE MEMBER. REFER TO TYPICAL DETAIL X ON DRAWING S0.0X.

12.) INDICATES WELD ALL AROUND, REFER TO TYPICAL DETAIL X ON DRAWING S0.0X.

13.) WF — INDICATES A BENT STEEL BEAM, REFER TO DETAILS 8 AND 9 ON DRAWING S0-0-6.

14.) < X" > INDICATES UPWARD CAMBER AT THE MID-SPAN OF THE MEMBER.

15.) [XX] INDICATES THE NUMBER OF 3/4" DIAMETER x 4" LONG HEADED STUDS WELDED TO THE TOP FLANGE OF THE BEAM. SPACE STUDS EVENLY ALONG THE BEAM UNLESS NOTED OTHERWISE.

16.) FOR EXACT NUMBER, SIZE, AND LOCATION OF OPENINGS IN STEEL DECKING, REFER TO MECHANICAL AND ARCHITECTURAL DRAWINGS. FOR FRAMING REFER TO DETAIL X ON DRAWING S0.0X AND DETAILS X AND X ON DRAWING S0.0X.

17.) REFER TO ARCHITECTURAL DRAWINGS FOR ELEVATIONS AND VERTICAL DIMENSIONS. PITCH ALL STEEL UNIFORMLY TO LOW POINTS AT THE COLUMNS AND BENT BEAMS AS SHOWN ON THE ARCHITECTURAL DRAWINGS.

18.) INDICATES A ROOF DRAIN, REFER TO DETAIL X ON DRAWING S0.0X AND DETAIL X ON DRAWING S0.0X FOR DECK SUPPORT. REFER TO ARCHITECTURAL AND PLUMBING DRAWINGS FOR EXACT LOCATIONS.

19.) FOR DIMENSIONS AND ELEVATIONS NOT GIVEN REFER TO ARCHITECTURAL DRAWINGS.

20.) 50k — INDICATES A SHEAR TAB CONNECTION DESIGNED FOR AN UNFACTORED AXIAL SEISMIC FORCE OF ± 50 KIPS.

FRAMING ELEVATION NOTES:

1) REFER TO GRADING PLANS C3.1 THROUGH C3.5 FOR FLOOR ELEVATIONS. THE STRUCTURAL DRAWINGS USE A DATUM ELEVATION OF 100' - 0".

2) COORDINATE ALL ELEVATIONS WITH ARCHITECTURAL DRAWINGS.

3) SLOPE STEEL UNIFORMLY TO COLUMN OR BENT BEAM ELEVATIONS SHOWN ON PLAN.

4) COORDINATE COLUMN ELEVATIONS WITH ROOF DRAINS, REFER TO ARCHITECTURAL DRAWINGS.

5) BOTTOM OF DECK ELEVATION TO BE 127' - 7 1/2" UNLESS NOTED OTHERWISE AS THUS (XX' - XX"), +/- (XX'-XX"), OR (HI / LO).

6) BOTTOM OF DECK ELEVATION TO BE 127' - 0" SOUTH OF GRIDLINE 3 - 2 BETWEEN GIRDLINES 3 - D AND 3 - F UNLESS NOTED OTHERWISE AS THUS (XX' - XX"),+/- (XX'-XX"), OR (HI / LO).

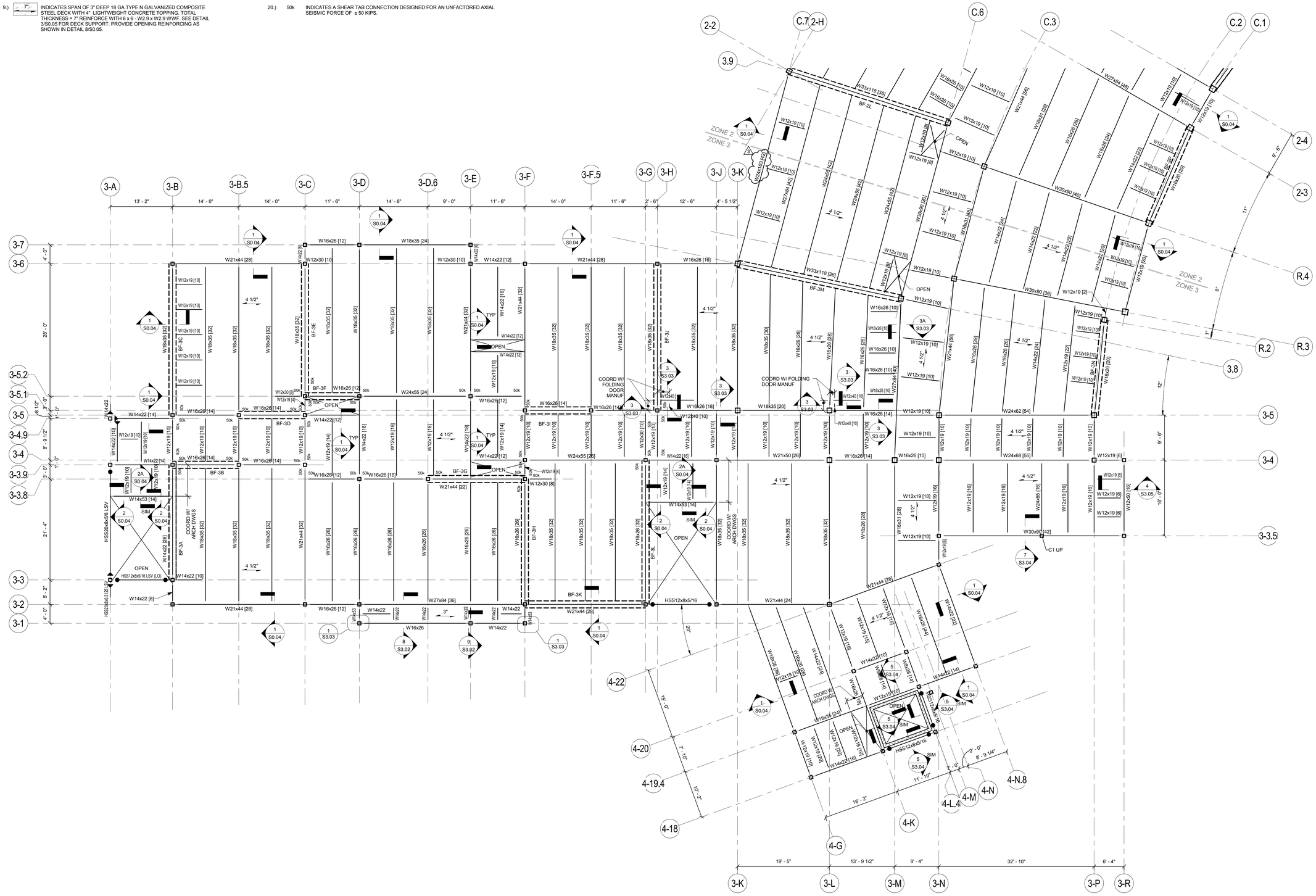

526 Boston Post Rd Wayland, MA
508.358.0790 www.ai3architects.com

Engineers Design Group Inc.
Structural Engineers
350 Main St. 2nd Flr
Malden, Ma 02148
(781)396-9007
(781)396-9008 (FAX)
EDG@EDGINC.COM

Copyright©2016 Ai3 Architects, LLC

BEVERLY MIDDLE SCHOOL

CABOT STREET
BEVERLY, MA 01915

BID PACKAGE #3
FOUNDATIONS, STRUCTURAL STEEL, & SITEWORK

NORTH ARROW

ADDENDUMIZED DRAWINGS

KEYPLAN

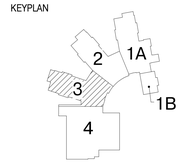

DRAWING NAME:

THIRD FLOOR FRAMING PLAN ZONE 3

DRAWN BY: DH

REVIEWED BY: CJO

SCALE: 1/8" = 1'-0"

JOB NO: 2014-076

DATE: April 18, 2016

DRAWING NUMER: S1.33

5/20/2016 1:21:43 PM C:\Users\DHarris\Documents\Beverly - 2016_18May2016_105624_dharris.rvt

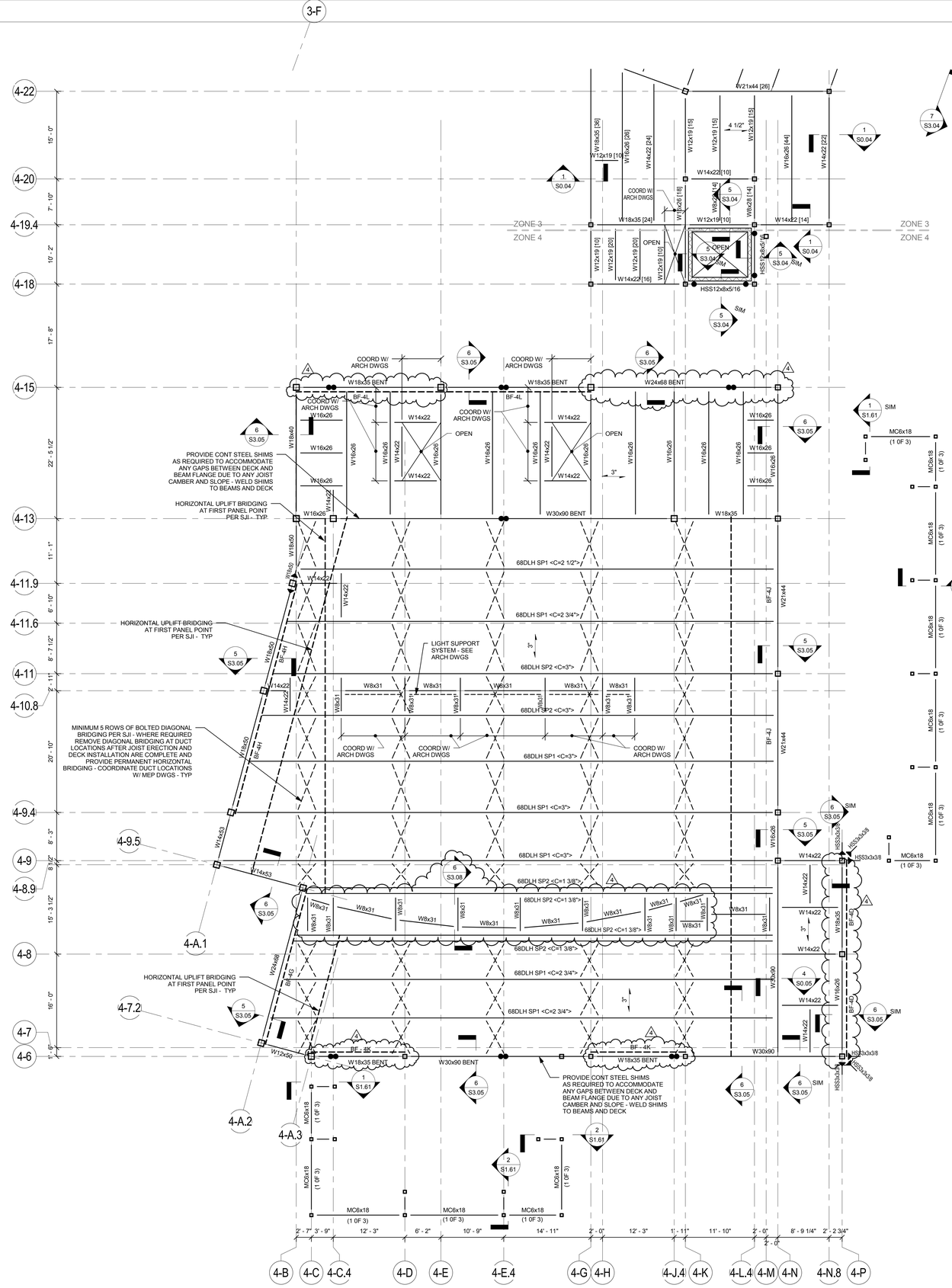

FRAMING NOTES:

1) FOR GENERAL NOTES AND TYPICAL DETAILS, SEE DRAWINGS S0.01, S0.02, S0.03, S0.04, S0.05, AND S0.06.

2.) CT INDICATES A COLUMN TERMINATES AT THIS LEVEL

3.) OR OR INDICATES A STRUCTURAL MASONRY PARTITION WALL BELOW. REFER TO RELEVANT SECTIONS FOR REINFORCING. REFER TO SEISMIC CLIPPING DETAIL 4 ON DRAWING S0.03. PROVIDE MINIMUM REINFORCEMENT PER DETAIL 1 ON DRAWING S0.03.

4.) BF-1 INDICATES A BRACED BAY TYPE, SEE DRAWINGS S4.01 THRU S4.08 FOR ELEVATIONS AND DETAILS.

5.) 4 1/2" INDICATES SPAN DIRECTION OF 2" DEEP, 18 GAGE, GALVANIZED COMPOSITE STEEL DECK WITH 2 1/2" NORMAL WEIGHT CONCRETE TOPPING. TOTAL THICKNESS = 4 1/2". REINFORCE WITH 6 x 6 - W2.9 x W2.9 WWF TYPICAL UNLESS NOTED OTHERWISE.

6.) 4 1/2" 16 GA INDICATES SPAN DIRECTION OF 2" DEEP, 16 GAGE, GALVANIZED COMPOSITE STEEL DECK WITH 2 1/2" NORMAL WEIGHT CONCRETE TOPPING. TOTAL THICKNESS = 4 1/2". REINFORCE WITH 6 x 6 - W2.9 x W2.9 WWF TYPICAL UNLESS NOTED OTHERWISE.

7.) 3" INDICATES SPAN OF 3" DEEP x 18 GA TYPE N, GALVANIZED STEEL ROOF DECK.

8.) 3" AC INDICATES SPAN OF 3" DEEP x 18 GA TYPE NCAS, GALVANIZED ACOUSTICAL CELLULAR STEEL ROOF DECK.

9.) 7" INDICATES SPAN OF 3" DEEP 18 GA TYPE N GALVANIZED COMPOSITE STEEL DECK WITH 4" LIGHTWEIGHT CONCRETE TOPPING. TOTAL THICKNESS = 7" REINFORCE WITH 6 x 6 - W2.9 x W2.9 WWF. SEE DETAIL 3/S0.05 FOR DECK SUPPORT. PROVIDE OPENING REINFORCING AS SHOWN IN DETAIL 8/S0.06.

10.) FOR EDGE OF SLAB/DECK DIMENSIONS, REFER TO ARCHITECTURAL DRAWINGS FOR ADDITIONAL INFORMATION. REFER TO DETAIL 1 ON DRAWING S0.04 UNLESS NOTED OTHERWISE ON PLANS.

11.) INDICATES A MOMENT CONNECTION TO DEVELOP THE FULL CAPACITY OF THE MEMBER. REFER TO TYPICAL DETAIL 5 AND 6 ON DRAWING S0.04.

12.) INDICATES WELD ALL AROUND, REFER TO TYPICAL DETAIL 8 ON DRAWING S0.04.

13.) WF INDICATES A BENT STEEL BEAM, REFER TO DETAILS 8 AND 9 ON DRAWING S0.05.

14.) < X" > INDICATES UPWARD CAMBER AT THE MID-SPAN OF THE MEMBER.

15.) [XX] INDICATES THE NUMBER OF 3/4" DIAMETER x 4" LONG HEADED STUDS WELDED TO THE TOP FLANGE OF THE BEAM. SPACE STUDS EVENLY ALONG THE BEAM UNLESS NOTED OTHERWISE.

16.) FOR EXACT NUMBER, SIZE, AND LOCATION OF OPENINGS IN STEEL DECKING, REFER TO MECHANICAL AND ARCHITECTURAL DRAWINGS. FOR FRAMING REFER TO DETAIL 4 ON DRAWING S0.04 AND DETAILS 1, 2, AND 3 ON DRAWING S0.06.

17.) REFER TO ARCHITECTURAL DRAWINGS FOR ELEVATIONS AND VERTICAL DIMENSIONS. PITCH ALL STEEL UNIFORMLY TO LOW POINTS AT THE COLUMNS AND BENT BEAMS AS SHOWN ON THE ARCHITECTURAL DRAWINGS.

18.) INDICATES A ROOF DRAIN. REFER TO DETAIL 1, 2, AND 3 ON DRAWING S0.06 FOR DECK SUPPORT. REFER TO ARCHITECTURAL AND PLUMBING DRAWINGS FOR EXACT LOCATIONS.

19.) FOR DIMENSIONS AND ELEVATIONS NOT GIVEN REFER TO ARCHITECTURAL DRAWINGS.

20.) 50k INDICATES A SHEAR TAB CONNECTION DESIGNED FOR AN UNFACTORED AXIAL SEISMIC FORCE OF ± 50 KIPS.

FRAMING ELEVATION NOTES:

1) REFER TO GRADING PLANS C3.1 THROUGH C3.5 FOR FLOOR ELEVATIONS. THE STRUCTURAL DRAWINGS USE A DATUM ELEVATION OF 100' - 0".

2) COORDINATE ALL ELEVATIONS WITH ARCHITECTURAL DRAWINGS.

3) SLOPE STEEL UNIFORMLY TO COLUMN OR BENT BEAM ELEVATIONS SHOWN ON PLAN.

4) COORDINATE COLUMN ELEVATIONS WITH ROOF DRAINS, REFER TO ARCHITECTURAL DRAWINGS.

5) BOTTOM OF DECK ELEVATION TO BE 127' - 7 1/2" NORTH OF GRIDLINE 4 - 18 UNLESS NOTED OTHERWISE AS THUS (XX' - XX"), +/- (XX'-XX"), OR (HI / LO).

6) BOTTOM OF DECK ELEVATION TO BE 141' - 0 1/2" BETWEEN GRIDLINES 4 - N AND 4 - P UNLESS NOTED OTHERWISE AS THUS (XX' - XX"),+/- (XX'-XX"), OR (HI / LO).

7) BOTTOM OF DECK ELEVATION TO BE 141' - 0 1/2" ALONG GRIDLINE 4 - N UNLESS NOTED OTHERWISE AS THUS (XX' - XX"),+/- (XX'-XX"), OR (HI / LO).

8) BOTTOM OF DECK ELEVATION TO BE 141' - 0 1/2" ALONG WESTERN EDGE OF ROOF UNLESS NOTED OTHERWISE AS THUS (XX' - XX"),+/- (XX'-XX"), OR (HI / LO).

architects
526 Boston Post Rd Wayland, MA
508.358.0790 www.ai3architects.com

EDG
Engineers Design Group Inc.
Structural Engineers
350 Main St. 2nd Flr
Malden, Ma 02148
(781)396-9007
(781)396-9008 (FAX)
EDG@EDGINC.COM

BEVERLY MIDDLE SCHOOL

CABOT STREET
BEVERLY, MA 01915

Copyright©2016 AI3 Architects, LLC

BID PACKAGE #3
FOUNDATIONS, STRUCTURAL STEEL, & SITEWORK

NORTH ARROW

ADDENDUMIZED DRAWINGS

KEYPLAN

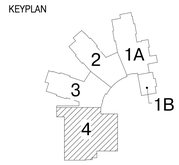

DRAWING NAME:

THIRD FLOOR FRAMING PLAN ZONE 4

DRAWN BY: DH

REVIEWED BY: CJO

SCALE: 1/8" = 1'-0"

JOB NO: 2014-076

DATE: April 18, 2016

DRAWING NUMER: S1.34

5/20/2016 1:21:47 PM C:\Users\DHarris\Documents\Beverly - 2016_18May2016_105624_dharris.rvt

FRAMING NOTES:

1) FOR GENERAL NOTES AND TYPICAL DETAILS, SEE DRAWINGS S0.01, S0.02, S0.03, S0.04, S0.05, AND S0.06.

2.) CT INDICATES A COLUMN TERMINATES AT THIS LEVEL

3.) OR OR INDICATES A STRUCTURAL MASONRY PARTITION WALL BELOW. REFER TO RELEVANT SECTIONS FOR REINFORCING. REFER TO SEISMIC CLIPPING DETAIL 4 ON DRAWING S0.03. PROVIDE MINIMUM REINFORCEMENT PER DETAIL 1 ON DRAWING S0.03.

4.) BF-1 INDICATES A BRACED BAY TYPE, SEE DRAWINGS S4.01 THRU S4.08 FOR ELEVATIONS AND DETAILS.

5.) 4 1/2" INDICATES SPAN DIRECTION OF 2" DEEP, 18 GAGE, GALVANIZED COMPOSITE STEEL DECK WITH 2 1/2" NORMAL WEIGHT CONCRETE TOPPING. TOTAL THICKNESS = 4 1/2". REINFORCE WITH 6 x 6 - W2.9 x W2.9 WWF TYPICAL UNLESS NOTED OTHERWISE.

6.) 4 1/2" 16 GA INDICATES SPAN DIRECTION OF 2" DEEP, 16 GAGE, GALVANIZED COMPOSITE STEEL DECK WITH 2 1/2" NORMAL WEIGHT CONCRETE TOPPING. TOTAL THICKNESS = 4 1/2". REINFORCE WITH 6 x 6 - W2.9 x W2.9 WWF TYPICAL UNLESS NOTED OTHERWISE.

7.) 3" INDICATES SPAN OF 3" DEEP x 18 GA TYPE N, GALVANIZED STEEL ROOF DECK.

8.) 3" AC INDICATES SPAN OF 3" DEEP x 18 GA TYPE NCAS, GALVANIZED ACOUSTICAL CELLULAR STEEL ROOF DECK.

9.) 7" INDICATES SPAN OF 3" DEEP 18 GA TYPE N GALVANIZED COMPOSITE STEEL DECK WITH 4" LIGHTWEIGHT CONCRETE TOPPING. TOTAL THICKNESS = 7" REINFORCE WITH 6 x 6 - W2.9 x W2.9 WWF. SEE DETAIL 3/S0.05 FOR DECK SUPPORT. PROVIDE OPENING REINFORCING AS SHOWN IN DETAIL 8/S0.06.

10.) FOR EDGE OF SLAB/DECK DIMENSIONS, REFER TO ARCHITECTURAL DRAWINGS FOR ADDITIONAL INFORMATION. REFER TO DETAIL 1 ON DRAWING S0.04 UNLESS NOTED OTHERWISE ON PLANS.

11.) INDICATES A MOMENT CONNECTION TO DEVELOP THE FULL CAPACITY OF THE MEMBER. REFER TO TYPICAL DETAIL 5 AND 6 ON DRAWING S0.04.

12.) INDICATES WELD ALL AROUND, REFER TO TYPICAL DETAIL 8 ON DRAWING S0.04.

13.) WF INDICATES A BENT STEEL BEAM, REFER TO DETAILS 8 AND 9 ON DRAWING S0.05.

14.) < X" > INDICATES UPWARD CAMBER AT THE MID-SPAN OF THE MEMBER.

15.) [XX] INDICATES THE NUMBER OF 3/4" DIAMETER x 4" LONG HEADED STUDS WELDED TO THE TOP FLANGE OF THE BEAM. SPACE STUDS EVENLY ALONG THE BEAM UNLESS NOTED OTHERWISE.

16.) FOR EXACT NUMBER, SIZE, AND LOCATION OF OPENINGS IN STEEL DECKING, REFER TO MECHANICAL AND ARCHITECTURAL DRAWINGS. FOR FRAMING REFER TO DETAIL 4 ON DRAWING S0.04 AND DETAILS 1, 2, AND 3 ON DRAWING S0.06.

17.) REFER TO ARCHITECTURAL DRAWINGS FOR ELEVATIONS AND VERTICAL DIMENSIONS. PITCH ALL STEEL UNIFORMLY TO LOW POINTS AT THE COLUMNS AND BENT BEAMS AS SHOWN ON THE ARCHITECTURAL DRAWINGS.

18.) INDICATES A ROOF DRAIN. REFER TO DETAIL 1, 2, AND 3 ON DRAWING S0.06 FOR DECK SUPPORT. REFER TO ARCHITECTURAL AND PLUMBING DRAWINGS FOR EXACT LOCATIONS.

19.) FOR DIMENSIONS AND ELEVATIONS NOT GIVEN REFER TO ARCHITECTURAL DRAWINGS.

20.) 50k INDICATES A SHEAR TAB CONNECTION DESIGNED FOR AN UNFACTORED AXIAL SEISMIC FORCE OF ± 50 KIPS.

FRAMING ELEVATION NOTES:

1) REFER TO GRADING PLANS C3.1 THROUGH C3.5 FOR FLOOR ELEVATIONS. THE STRUCTURAL DRAWINGS USE A DATUM ELEVATION OF 100' - 0".

2) COORDINATE ALL ELEVATIONS WITH ARCHITECTURAL DRAWINGS.

3) SLOPE STEEL UNIFORMLY TO COLUMN OR BENT BEAM ELEVATIONS SHOWN ON PLAN.

4) COORDINATE COLUMN ELEVATIONS WITH ROOF DRAINS, REFER TO ARCHITECTURAL DRAWINGS.

5) BOTTOM OF DECK ELEVATION TO BE 141' - 7 1/2" UNLESS NOTED OTHERWISE AS THUS (XX' - XX"), +/- (XX'-XX"), OR (HI / LO).

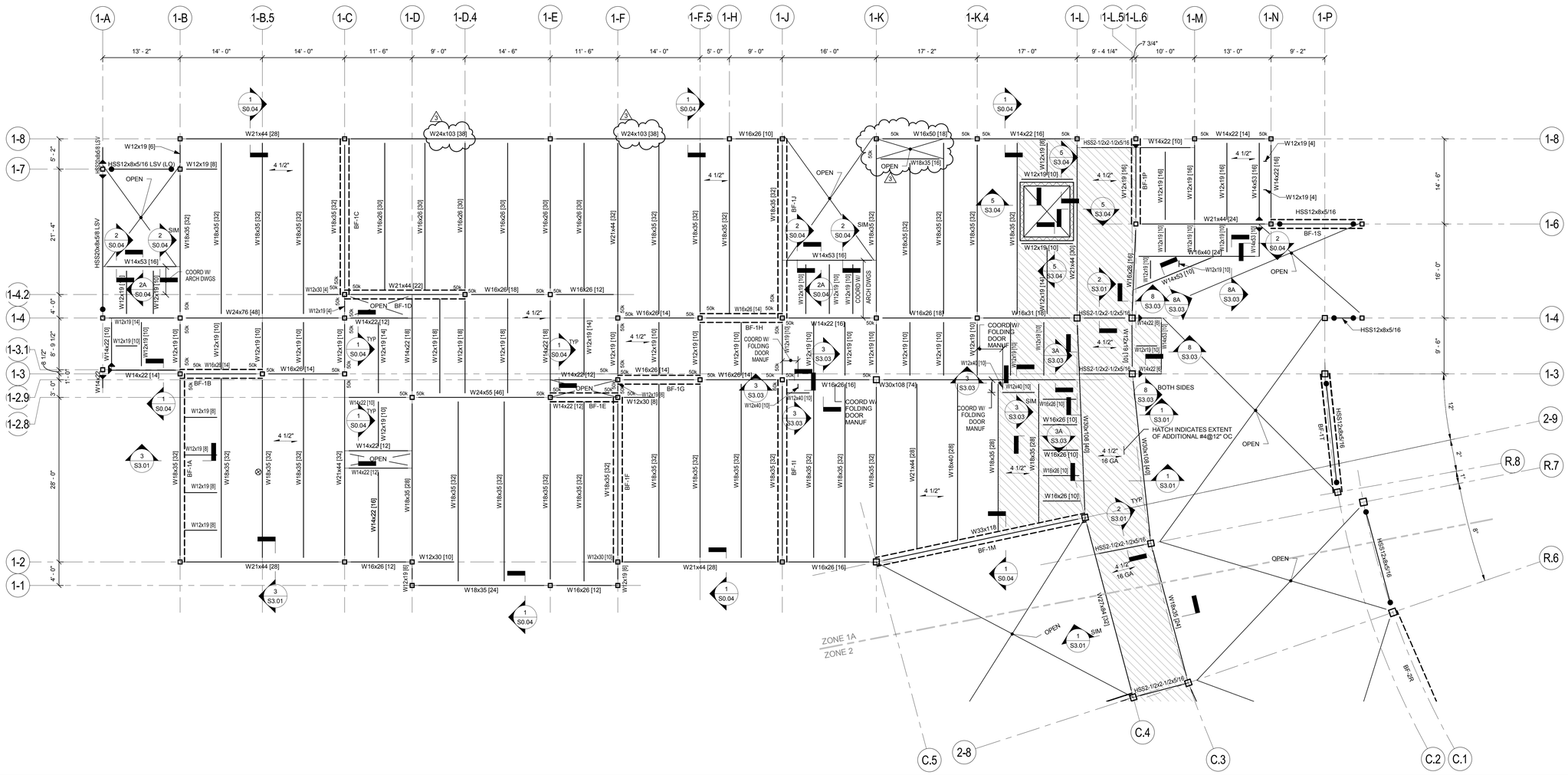

526 Boston Post Rd Wayland, MA
508.358.0790 www.ai3architects.com

Engineers Design Group Inc.
Structural Engineers
350 Main St. 2nd Flr
Malden, Ma 02148
(781)396-9007
(781)396-9008 (FAX)
EDG@EDGINC.COM

BEVERLY MIDDLE SCHOOL

CABOT STREET
BEVERLY, MA 01915

Copyright©2016 AI3 Architects, LLC

BID PACKAGE #3
FOUNDATIONS, STRUCTURAL STEEL, & SITEWORK

NORTH ARROW | ADDENDUMIZED DRAWINGS

KEYPLAN

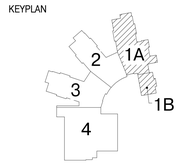

DRAWING NAME:

FOURTH FLOOR FRAMING PLAN ZONE 1

DRAWN BY: DH
REVIEWED BY: CJO
SCALE: 1/8" = 1'-0"
JOB NO: 2014-076
DATE: April 18, 2016
DRAWING NUMER: S1.41

5/20/2016 1:21:50 PM C:\Users\DHarris\Documents\Beverly - 2016_18May2016_105624_dharris.rvt

FRAMING NOTES:

1) FOR GENERAL NOTES AND TYPICAL DETAILS, SEE DRAWINGS S0.01, S0.02, S0.03, S0.04, S0.05, AND S0.06.

2.) CT — INDICATES A COLUMN TERMINATES AT THIS LEVEL.

3.) X OR OR — INDICATES A STRUCTURAL MASONRY PARTITION WALL BELOW. REFER TO RELEVANT SECTIONS FOR REINFORCING. REFER TO SEISMIC CLIPPING DETAIL 4 ON DRAWING S0.03. PROVIDE MINIMUM REINFORCEMENT PER DETAIL 1 ON DRAWING S0.03. 3

4.) BF-1 INDICATES A BRACED BAY TYPE, SEE DRAWINGS S4.01 THRU S4.08 FOR ELEVATIONS AND DETAILS.

5.) 4 1/2" — INDICATES SPAN DIRECTION OF 2" DEEP, 18 GAGE, GALVANIZED COMPOSITE STEEL DECK WITH 2 1/2" NORMAL WEIGHT CONCRETE TOPPING. TOTAL THICKNESS = 4 1/2". REINFORCE WITH 6 x 6 - W2.9 x W2.9 WWF TYPICAL UNLESS NOTED OTHERWISE.

6.) 4 1/2" 16 GA — INDICATES SPAN DIRECTION OF 2" DEEP, 16 GAGE, GALVANIZED COMPOSITE STEEL DECK WITH 2 1/2" NORMAL WEIGHT CONCRETE TOPPING. TOTAL THICKNESS = 4 1/2". REINFORCE WITH 6 x 6 - W2.9 x W2.9 WWF TYPICAL UNLESS NOTED OTHERWISE.

7.) 3" — INDICATES SPAN OF 3" DEEP x 18 GA TYPE N, GALVANIZED STEEL ROOF DECK.

8.) 3" AC — INDICATES SPAN OF 3" DEEP x 18 GA TYPE NCAS, GALVANIZED ACOUSTICAL CELLULAR STEEL ROOF DECK.

9.) 7" — INDICATES SPAN OF 3" DEEP 18 GA TYPE N GALVANIZED COMPOSITE STEEL DECK WITH 4" LIGHTWEIGHT CONCRETE TOPPING. TOTAL THICKNESS = 7" REINFORCE WITH 6 x 6 - W2.9 x W2.9 WWF. SEE DETAIL 3/S0.05 FOR DECK SUPPORT. PROVIDE OPENING REINFORCING AS SHOWN IN DETAIL 8/S0.06.

10.) FOR EDGE OF SLAB/DECK DIMENSIONS, REFER TO ARCHITECTURAL DRAWINGS. FOR ADDITIONAL INFORMATION. REFER TO DETAIL 1 ON DRAWING S0.04 UNLESS NOTED OTHERWISE ON PLANS. 3

11.) INDICATES A MOMENT CONNECTION TO DEVELOP THE FULL CAPACITY OF THE MEMBER. REFER TO TYPICAL DETAIL 5 AND 6 ON DRAWING S0.04.

12.) INDICATES WELD ALL AROUND, REFER TO TYPICAL DETAIL 8 ON DRAWING S0.04.

13.) WF — INDICATES A BENT STEEL BEAM, REFER TO DETAILS 8 AND 9 ON DRAWING S0.05.

14.) < X" > INDICATES UPWARD CAMBER AT THE MID-SPAN OF THE MEMBER.

15.) [XX] INDICATES THE NUMBER OF 3/4" DIAMETER x 4" LONG HEADED STUDS WELDED TO THE TOP FLANGE OF THE BEAM. SPACE STUDS EVENLY ALONG THE BEAM UNLESS NOTED OTHERWISE.

16.) FOR EXACT NUMBER, SIZE, AND LOCATION OF OPENINGS IN STEEL DECKING, REFER TO MECHANICAL AND ARCHITECTURAL DRAWINGS. FOR FRAMING REFER TO DETAIL 4 ON DRAWING S0.04 AND DETAILS 1, 2, AND 3 ON DRAWING S0.06.

17.) REFER TO ARCHITECTURAL DRAWINGS FOR ELEVATIONS AND VERTICAL DIMENSIONS. PITCH ALL STEEL UNIFORMLY TO LOW POINTS AT THE COLUMNS AND BENT BEAMS AS SHOWN ON THE ARCHITECTURAL DRAWINGS.

18.) INDICATES A ROOF DRAIN, REFER TO DETAIL 1, 2, AND 3 ON DRAWING S0.06 FOR DECK SUPPORT. REFER TO ARCHITECTURAL AND PLUMBING DRAWINGS FOR EXACT LOCATIONS.

19.) FOR DIMENSIONS AND ELEVATIONS NOT GIVEN REFER TO ARCHITECTURAL DRAWINGS.

20.) 50k — INDICATES A SHEAR TAB CONNECTION DESIGNED FOR AN UNFACTORED AXIAL SEISMIC FORCE OF ± 50 KIPS.

FRAMING ELEVATION NOTES:

1) REFER TO GRADING PLANS C3.1 THROUGH C3.5 FOR FLOOR ELEVATIONS. THE STRUCTURAL DRAWINGS USE A DATUM ELEVATION OF 100' - 0".

2) COORDINATE ALL ELEVATIONS WITH ARCHITECTURAL DRAWINGS.

3) SLOPE STEEL UNIFORMLY TO COLUMN OR BENT BEAM ELEVATIONS SHOWN ON PLAN.

4) COORDINATE COLUMN ELEVATIONS WITH ROOF DRAINS, REFER TO ARCHITECTURAL DRAWINGS.

5) BOTTOM OF DECK ELEVATION TO BE 141' - 7-1/2" UNLESS NOTED OTHERWISE AS THUS (XX' - XX"), +/- (XX'-XX"), OR (HI / LO).

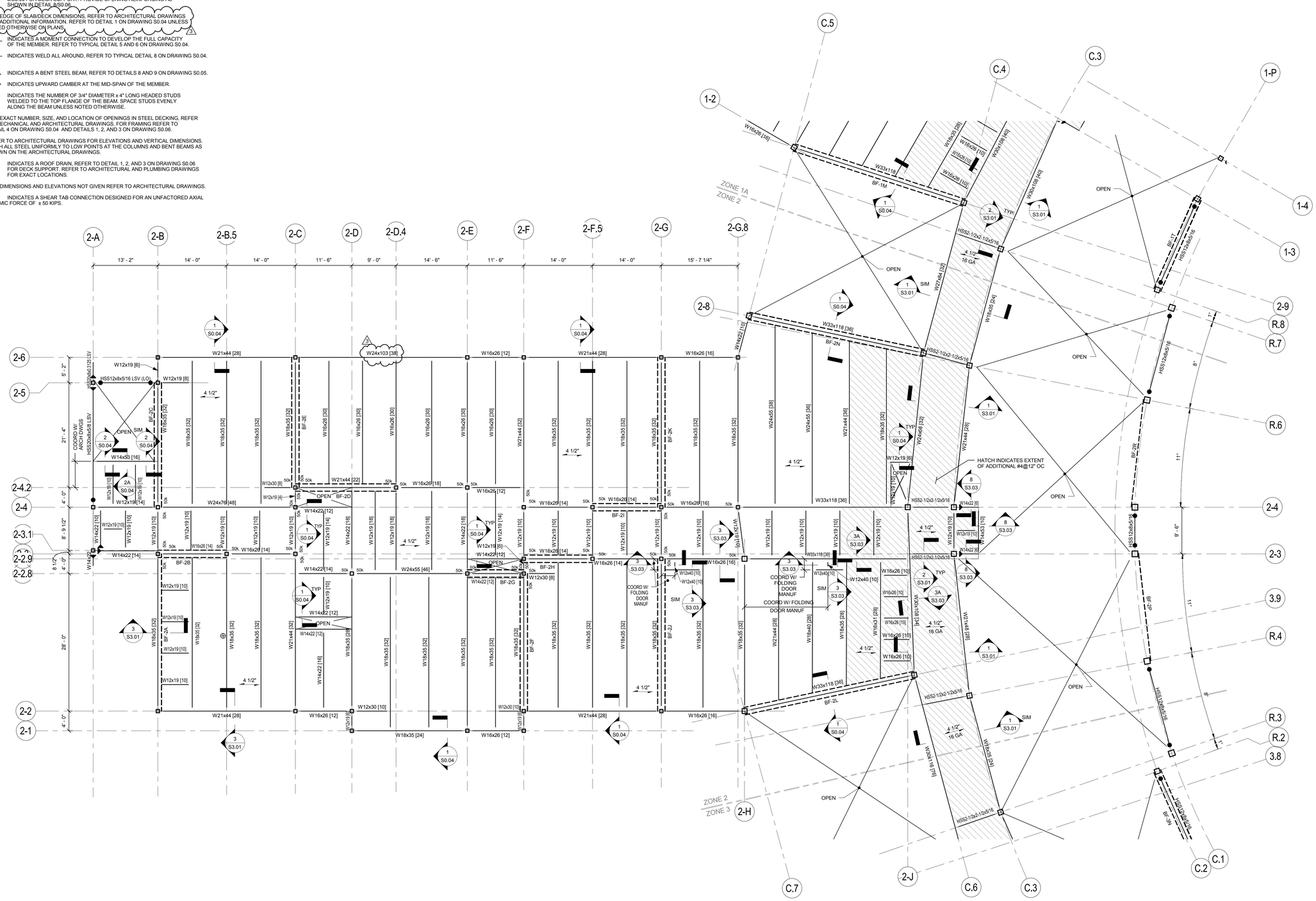

ai3 architects
526 Boston Post Rd Wayland, MA
508.358.0790 www.ai3architects.com

EDG
Engineers Design Group Inc.
Structural Engineers
350 Main St. 2nd Flr
Malden, Ma 02148
(781)396-9007
(781)396-9008 (FAX)
EDG@EDGINC.COM

Copyright©2016 AI3 Architects, LLC

BEVERLY MIDDLE SCHOOL

CABOT STREET
BEVERLY, MA 01915

BID PACKAGE #3
FOUNDATIONS, STRUCTURAL STEEL, & SITEWORK

NORTH ARROW | ADDENDUMIZED DRAWINGS

KEYPLAN

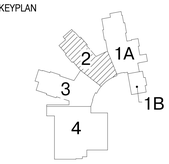

DRAWING NAME:

FOURTH FLOOR FRAMING PLAN ZONE 2

DRAWN BY: DH
REVIEWED BY: CJO
SCALE: 1/8" = 1'-0"
JOB NO: 2014-076
DATE: April 18, 2016
DRAWING NUMER: S1.42

5/20/2016 1:21:53 PM C:\Users\DHarris\Documents\Beverly - 2016_18May2016_105624_dharris.rvt

FRAMING NOTES:

1) FOR GENERAL NOTES AND TYPICAL DETAILS, SEE DRAWINGS S0.01, S0.02, S0.03, S0.04, S0.05, AND S0.06.

2.) CT INDICATES A COLUMN TERMINATES AT THIS LEVEL.

3.) OR OR INDICATES A STRUCTURAL MASONRY PARTITION WALL BELOW. REFER TO RELEVANT SECTIONS FOR REINFORCING. REFER TO SEISMIC CLIPPING DETAIL 4 ON DRAWING S0.03. PROVIDE MINIMUM REINFORCEMENT PER DETAIL 1 ON DRAWING S0.03.

4.) BF-1 INDICATES A BRACED BAY TYPE, SEE DRAWINGS S4.01 THRU S4.08 FOR ELEVATIONS AND DETAILS.

5.) 4 1/2" INDICATES SPAN DIRECTION OF 2" DEEP, 18 GAGE, GALVANIZED COMPOSITE STEEL DECK WITH 2 1/2" NORMAL WEIGHT CONCRETE TOPPING. TOTAL THICKNESS = 4 1/2". REINFORCE WITH 6 x 6 - W2.9 x W2.9 WWF TYPICAL UNLESS NOTED OTHERWISE.

6.) 4 1/2" 16 GA INDICATES SPAN DIRECTION OF 2" DEEP, 16 GAGE, GALVANIZED COMPOSITE STEEL DECK WITH 2 1/2" NORMAL WEIGHT CONCRETE TOPPING. TOTAL THICKNESS = 4 1/2". REINFORCE WITH 6 x 6 - W2.9 x W2.9 WWF TYPICAL UNLESS NOTED OTHERWISE.

7.) 3" INDICATES SPAN OF 3" DEEP x 18 GA TYPE N, GALVANIZED STEEL ROOF DECK.

8.) 3" AC INDICATES SPAN OF 3" DEEP x 18 GA TYPE NCAS, GALVANIZED ACOUSTICAL CELLULAR STEEL ROOF DECK.

9.) 7" INDICATES SPAN OF 3" DEEP 18 GA TYPE N GALVANIZED COMPOSITE STEEL DECK WITH 4" LIGHTWEIGHT CONCRETE TOPPING. TOTAL THICKNESS = 7" REINFORCE WITH 6 x 6 - W2.9 x W2.9 WWF. SEE DETAIL 3/S0.05 FOR DECK SUPPORT. PROVIDE OPENING REINFORCING AS SHOWN IN DETAIL 8/S0.06.

10.) FOR EDGE OF SLAB/DECK DIMENSIONS, REFER TO ARCHITECTURAL DRAWINGS FOR ADDITIONAL INFORMATION. REFER TO DETAIL 1 ON DRAWING S0.04 UNLESS NOTED OTHERWISE ON PLANS.

11.) INDICATES A MOMENT CONNECTION TO DEVELOP THE FULL CAPACITY OF THE MEMBER. REFER TO TYPICAL DETAIL 5 AND 6 ON DRAWING S0.04.

12.) INDICATES WELD ALL AROUND, REFER TO TYPICAL DETAIL 8 ON DRAWING S0.04.

13.) WF INDICATES A BENT STEEL BEAM, REFER TO DETAILS 8 AND 9 ON DRAWING S0.05.

14.) < X" > INDICATES UPWARD CAMBER AT THE MID-SPAN OF THE MEMBER.

15.) [XX] INDICATES THE NUMBER OF 3/4" DIAMETER x 4" LONG HEADED STUDS WELDED TO THE TOP FLANGE OF THE BEAM. SPACE STUDS EVENLY ALONG THE BEAM UNLESS NOTED OTHERWISE.

16.) FOR EXACT NUMBER, SIZE, AND LOCATION OF OPENINGS IN STEEL DECKING, REFER TO MECHANICAL AND ARCHITECTURAL DRAWINGS. FOR FRAMING REFER TO DETAIL 4 ON DRAWING S0.04 AND DETAILS 1, 2, AND 3 ON DRAWING S0.06.

17.) REFER TO ARCHITECTURAL DRAWINGS FOR ELEVATIONS AND VERTICAL DIMENSIONS. PITCH ALL STEEL UNIFORMLY TO LOW POINTS AT THE COLUMNS AND BENT BEAMS AS SHOWN ON THE ARCHITECTURAL DRAWINGS.

18.) INDICATES A ROOF DRAIN, REFER TO DETAIL 1, 2, AND 3 ON DRAWING S0.06 FOR DECK SUPPORT. REFER TO ARCHITECTURAL AND PLUMBING DRAWINGS FOR EXACT LOCATIONS.

19.) FOR DIMENSIONS AND ELEVATIONS NOT GIVEN REFER TO ARCHITECTURAL DRAWINGS.

20.) 50k INDICATES A SHEAR TAB CONNECTION DESIGNED FOR AN UNFACTORED AXIAL SEISMIC FORCE OF ± 50 KIPS.

FRAMING ELEVATION NOTES:

1) REFER TO GRADING PLANS C3.1 THROUGH C3.5 FOR FLOOR ELEVATIONS. THE STRUCTURAL DRAWINGS USE A DATUM ELEVATION OF 100' - 0".

2) COORDINATE ALL ELEVATIONS WITH ARCHITECTURAL DRAWINGS.

3) SLOPE STEEL UNIFORMLY TO COLUMN OR BENT BEAM ELEVATIONS SHOWN ON PLAN.

4) COORDINATE COLUMN ELEVATIONS WITH ROOF DRAINS, REFER TO ARCHITECTURAL DRAWINGS.

5) BOTTOM OF DECK ELEVATION TO BE 141' - 7 1/2" UNLESS NOTED OTHERWISE AS THUS (XX' - XX"), +/- (XX'-XX"), OR (HI / LO).

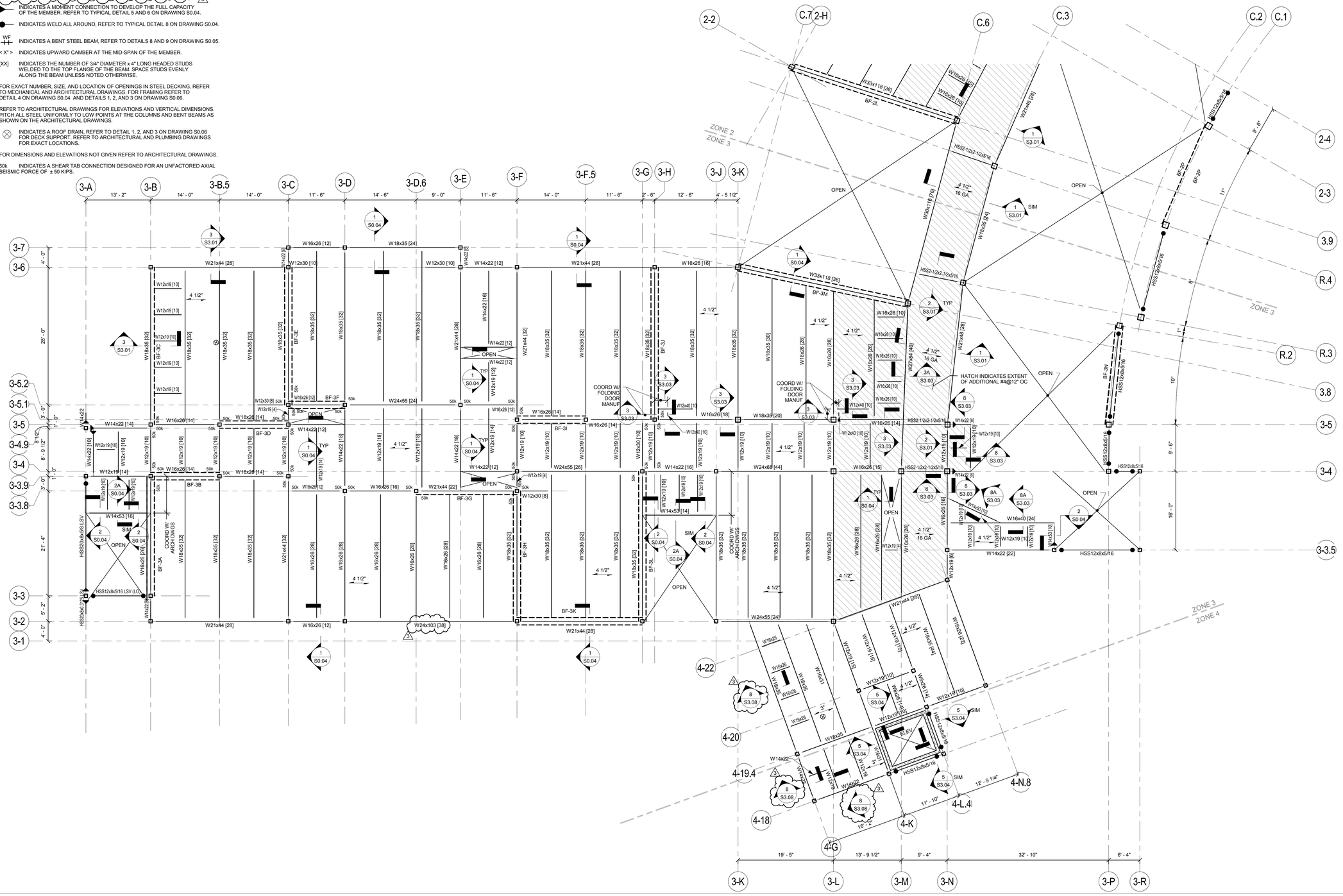

526 Boston Post Rd Wayland, MA
508.358.0790 www.ai3architects.com

Engineers Design Group Inc.
Structural Engineers
350 Main St. 2nd Flr
Malden, Ma 02148
(781)396-9007
(781)396-9008 (FAX)
EDG@EDGINC.COM

Copyright©2016 Ai3 Architects, LLC

BEVERLY MIDDLE SCHOOL

CABOT STREET
BEVERLY, MA 01915

BID PACKAGE #3
FOUNDATIONS, STRUCTURAL STEEL, & SITEWORK

NORTH ARROW | ADDENDUMIZED DRAWINGS

KEYPLAN

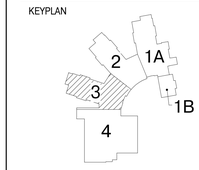

DRAWING NAME:

FOURTH FLOOR FRAMING PLAN ZONE 3

DRAWN BY: DH
REVIEWED BY: CJO
SCALE: 1/8" = 1'-0"
JOB NO: 2014-076
DATE: April 18, 2016
DRAWING NUMER: S1.43

5/20/2016 1:21:56 PM C:\Users\DHarris\Documents\Beverly - 2016_18May2016_105624_dharris.rvt

FRAMING NOTES:

1) FOR GENERAL NOTES AND TYPICAL DETAILS, SEE DRAWINGS S0.01, S0.02, S0.03, S0.04, S0.05, AND S0.06.

2.) CT INDICATES A COLUMN TERMINATES AT THIS LEVEL.

3.) OR OR INDICATES A STRUCTURAL MASONRY PARTITION WALL BELOW. REFER TO RELEVANT SECTIONS FOR REINFORCING. REFER TO SEISMIC CLIPPING DETAIL 4 ON DRAWING S0.03. PROVIDE MINIMUM REINFORCEMENT PER DETAIL 1 ON DRAWING S0.03. 3

4.) BF-1 INDICATES A BRACED BAY TYPE, SEE DRAWINGS S4.01 THRU S4.08 FOR ELEVATIONS AND DETAILS.

5.) 4 1/2" INDICATES SPAN DIRECTION OF 2" DEEP, 18 GAGE, GALVANIZED COMPOSITE STEEL DECK WITH 2 1/2" NORMAL WEIGHT CONCRETE TOPPING. TOTAL THICKNESS = 4 1/2". REINFORCE WITH 6 x 6 - W2.9 x W2.9 WWF TYPICAL UNLESS NOTED OTHERWISE.

6.) 4 1/2" 16 GA INDICATES SPAN DIRECTION OF 2" DEEP, 16 GAGE, GALVANIZED COMPOSITE STEEL DECK WITH 2 1/2" NORMAL WEIGHT CONCRETE TOPPING. TOTAL THICKNESS = 4 1/2". REINFORCE WITH 6 x 6 - W2.9 x W2.9 WWF TYPICAL UNLESS NOTED OTHERWISE.

7.) 3" INDICATES SPAN OF 3" DEEP x 18 GA TYPE N, GALVANIZED STEEL ROOF DECK.

8.) 3" AC INDICATES SPAN OF 3" DEEP x 18 GA TYPE NCAS, GALVANIZED ACOUSTICAL CELLULAR STEEL ROOF DECK.

9.) 7" INDICATES SPAN OF 3" DEEP 18 GA TYPE N GALVANIZED COMPOSITE STEEL DECK WITH 4" LIGHTWEIGHT CONCRETE TOPPING. TOTAL THICKNESS = 7" REINFORCE WITH 6 x 6 - W2.9 x W2.9 WWF. SEE DETAIL 3/S0.05 FOR DECK SUPPORT. PROVIDE OPENING REINFORCING AS SHOWN IN DETAIL 8/S0.06.

10.) FOR EDGE OF SLAB/DECK DIMENSIONS, REFER TO ARCHITECTURAL DRAWINGS FOR ADDITIONAL INFORMATION. REFER TO DETAIL 1 ON DRAWING S0.04 UNLESS NOTED OTHERWISE ON PLANS. 3

11.) INDICATES A MOMENT CONNECTION TO DEVELOP THE FULL CAPACITY OF THE MEMBER. REFER TO TYPICAL DETAIL 5 AND 6 ON DRAWING S0.04.

12.) INDICATES WELD ALL AROUND, REFER TO TYPICAL DETAIL 8 ON DRAWING S0.04.

13.) WF INDICATES A BENT STEEL BEAM, REFER TO DETAILS 8 AND 9 ON DRAWING S0.05.

14.) < X" > INDICATES UPWARD CAMBER AT THE MID-SPAN OF THE MEMBER.

15.) [XX] INDICATES THE NUMBER OF 3/4" DIAMETER x 4" LONG HEADED STUDS WELDED TO THE TOP FLANGE OF THE BEAM. SPACE STUDS EVENLY ALONG THE BEAM UNLESS NOTED OTHERWISE.

16.) FOR EXACT NUMBER, SIZE, AND LOCATION OF OPENINGS IN STEEL DECKING, REFER TO MECHANICAL AND ARCHITECTURAL DRAWINGS. FOR FRAMING REFER TO DETAIL 4 ON DRAWING S0.04 AND DETAILS 1, 2, AND 3 ON DRAWING S0.06.

17.) REFER TO ARCHITECTURAL DRAWINGS FOR ELEVATIONS AND VERTICAL DIMENSIONS. PITCH ALL STEEL UNIFORMILY TO LOW POINTS AT THE COLUMNS AND BENT BEAMS AS SHOWN ON THE ARCHITECTURAL DRAWINGS.

18.) INDICATES A ROOF DRAIN. REFER TO DETAIL 1, 2, AND 3 ON DRAWING S0.06 FOR DECK SUPPORT. REFER TO ARCHITECTURAL AND PLUMBING DRAWINGS FOR EXACT LOCATIONS.

19.) FOR DIMENSIONS AND ELEVATIONS NOT GIVEN REFER TO ARCHITECTURAL DRAWINGS.

20.) 50k INDICATES A SHEAR TAB CONNECTION DESIGNED FOR AN UNFACTORED AXIAL SEISMIC FORCE OF ± 50 KIPS.

FRAMING ELEVATION NOTES:

1) REFER TO GRADING PLANS C3.1 THROUGH C3.5 FOR FLOOR ELEVATIONS. THE STRUCTURAL DRAWINGS USE A DATUM ELEVATION OF 100' - 0".

2) COORDINATE ALL ELEVATIONS WITH ARCHITECTURAL DRAWINGS.

3) SLOPE STEEL UNIFORMILY TO COLUMN OR BENT BEAM ELEVATIONS SHOWN ON PLAN.

4) COORDINATE COLUMN ELEVATIONS WITH ROOF DRAINS, REFER TO ARCHITECTURAL DRAWINGS.

5) BOTTOM OF DECK ELEVATION TO BE 155' - 7" UNLESS NOTED OTHERWISE AS THUS (XX' - XX"), +/- (XX'-XX"), OR (HI / LO).

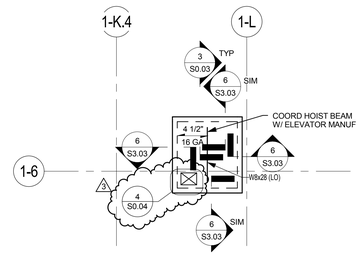

ELEV PART PLAN - AREA 1A

SCALE : 1/8" = 1' - 0"

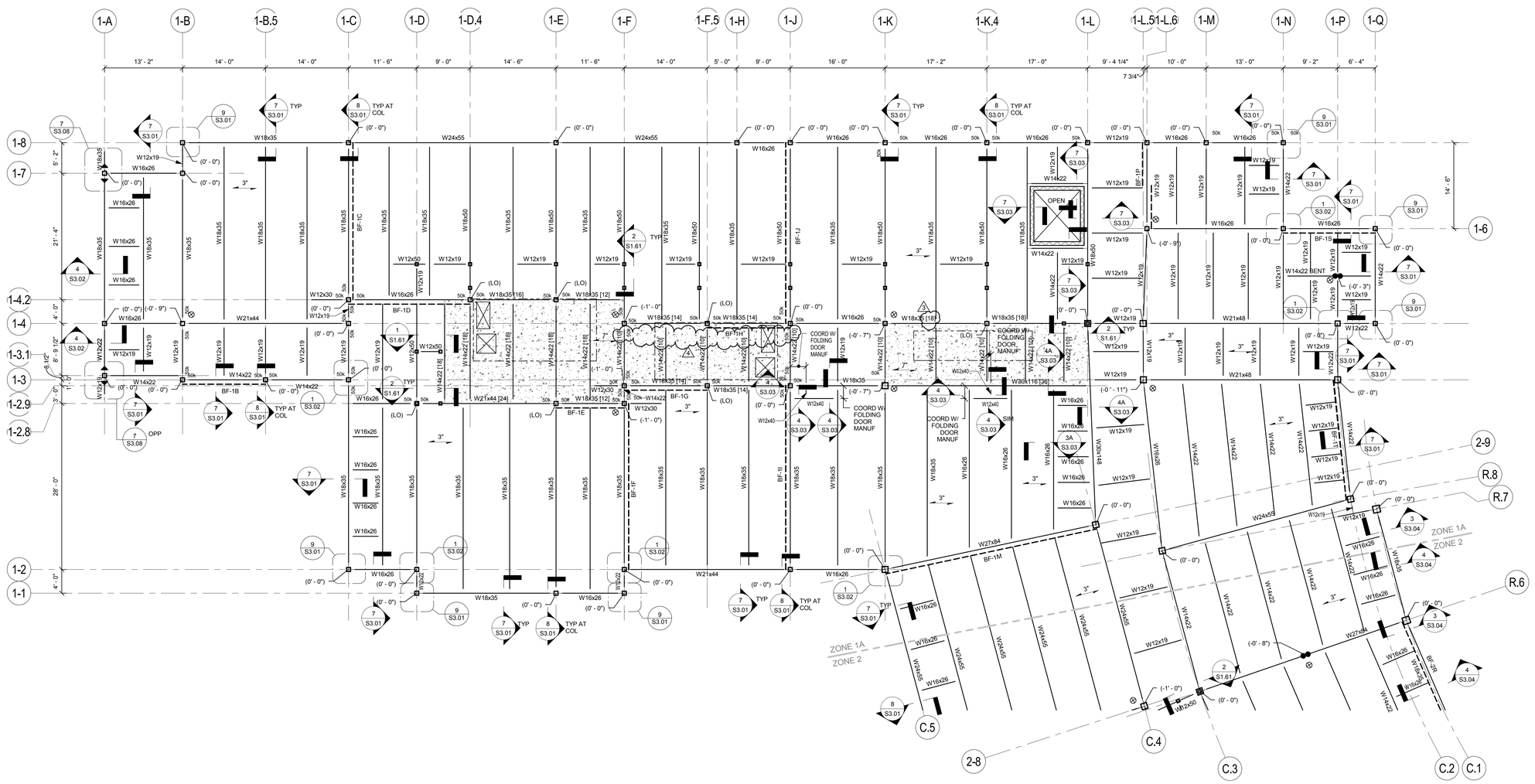

526 Boston Post Rd Wayland, MA
508.358.0790 www.ai3architects.com

Engineers Design Group Inc.
Structural Engineers
350 Main St. 2nd Flr
Malden, Ma 02148
(781)396-9007
(781)396-9008 (FAX)
EDG@EDGINC.COM

Copyright©2016 Ai3 Architects, LLC

BEVERLY MIDDLE SCHOOL

CABOT STREET
BEVERLY, MA 01915

BID PACKAGE #3
FOUNDATIONS, STRUCTURAL STEEL, & SITEWORK

NORTH ARROW | ADDENDUMIZED DRAWINGS

KEYPLAN

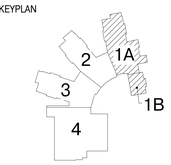

DRAWING NAME:

ROOF FRAMING PLAN ZONE 1

DRAWN BY: DH
REVIEWED BY: CJO
SCALE: 1/8" = 1'-0"
JOB NO: 2014-076
DATE: April 18, 2016
DRAWING NUMER: S1.51

5/20/2016 1:22:00 PM C:\Users\DHarris\Documents\Beverly - 2016_18May2016_105624_dharris.rvt

FRAMING NOTES:

1) FOR GENERAL NOTES AND TYPICAL DETAILS, SEE DRAWINGS S0.01, S0.02, S0.03, S0.04, S0.05, AND S0.06.

2.) CT INDICATES A COLUMN TERMINATES AT THIS LEVEL.

3.) INDICATES A STRUCTURAL MASONRY PARTITION WALL BELOW. REFER TO RELEVANT SECTIONS FOR REINFORCING. REFER TO SEISMIC CLIPPING DETAIL 4 ON DRAWING S0.03. PROVIDE MINIMUM REINFORCEMENT PER DETAIL 1 ON DRAWING S0.03.
OR
OR

4.) BF-1 INDICATES A BRACED BAY TYPE, SEE DRAWINGS S4.01 THRU S4.08 FOR ELEVATIONS AND DETAILS.

5.) 4 1/2" INDICATES SPAN DIRECTION OF 2" DEEP, 18 GAGE, GALVANIZED COMPOSITE STEEL DECK WITH 2 1/2" NORMAL WEIGHT CONCRETE TOPPING. TOTAL THICKNESS = 4 1/2". REINFORCE WITH 6 x 6 - W2.9 x W2.9 WWF TYPICAL UNLESS NOTED OTHERWISE.

6.) 4 1/2" 16 GA INDICATES SPAN DIRECTION OF 2" DEEP, 16 GAGE, GALVANIZED COMPOSITE STEEL DECK WITH 2 1/2" NORMAL WEIGHT CONCRETE TOPPING. TOTAL THICKNESS = 4 1/2". REINFORCE WITH 6 x 6 - W2.9 x W2.9 WWF TYPICAL UNLESS NOTED OTHERWISE.

7.) 3" INDICATES SPAN OF 3" DEEP x 18 GA TYPE N, GALVANIZED STEEL ROOF DECK.

8.) 3" AC INDICATES SPAN OF 3" DEEP x 18 GA TYPE NCAS, GALVANIZED ACOUSTICAL CELLULAR STEEL ROOF DECK.

9.) 7" INDICATES SPAN OF 3" DEEP 18 GA TYPE N GALVANIZED COMPOSITE STEEL DECK WITH 4" LIGHTWEIGHT CONCRETE TOPPING. TOTAL THICKNESS = 7" REINFORCE WITH 6 x 6 - W2.9 x W2.9 WWF. SEE DETAIL 3/S0.05 FOR DECK SUPPORT. PROVIDE OPENING REINFORCING AS SHOWN IN DETAIL 8/S0.05.

10.) FOR EDGE OF SLAB/DECK DIMENSIONS, REFER TO ARCHITECTURAL DRAWINGS FOR ADDITIONAL INFORMATION. REFER TO DETAIL 1 ON DRAWING S0.04 UNLESS NOTED OTHERWISE ON PLANS.

11.) INDICATES A MOMENT CONNECTION TO DEVELOP THE FULL CAPACITY OF THE MEMBER. REFER TO TYPICAL DETAIL 5 AND 6 ON DRAWING S0.04.

12.) INDICATES WELD ALL AROUND, REFER TO TYPICAL DETAIL 8 ON DRAWING S0.04.

13.) WF INDICATES A BENT STEEL BEAM, REFER TO DETAILS 8 AND 9 ON DRAWING S0.05.

14.) < X" > INDICATES UPWARD CAMBER AT THE MID-SPAN OF THE MEMBER.

15.) [XX] INDICATES THE NUMBER OF 3/4" DIAMETER x 4" LONG HEADED STUDS WELDED TO THE TOP FLANGE OF THE BEAM. SPACE STUDS EVENLY ALONG THE BEAM UNLESS NOTED OTHERWISE.

16.) FOR EXACT NUMBER, SIZE, AND LOCATION OF OPENINGS IN STEEL DECKING, REFER TO MECHANICAL AND ARCHITECTURAL DRAWINGS. FOR FRAMING REFER TO DETAIL 4 ON DRAWING S0.04 AND DETAILS 1, 2, AND 3 ON DRAWING S0.06.

17.) REFER TO ARCHITECTURAL DRAWINGS FOR ELEVATIONS AND VERTICAL DIMENSIONS. PITCH ALL STEEL UNIFORMLY TO LOW POINTS AT THE COLUMNS AND BENT BEAMS AS SHOWN ON THE ARCHITECTURAL DRAWINGS.

18.) INDICATES A ROOF DRAIN, REFER TO DETAIL 1, 2, AND 3 ON DRAWING S0.06 FOR DECK SUPPORT. REFER TO ARCHITECTURAL AND PLUMBING DRAWINGS FOR EXACT LOCATIONS.

19.) FOR DIMENSIONS AND ELEVATIONS NOT GIVEN REFER TO ARCHITECTURAL DRAWINGS.

20.) 50k INDICATES A SHEAR TAB CONNECTION DESIGNED FOR AN UNFACTORED AXIAL SEISMIC FORCE OF ± 50 KIPS.

FRAMING ELEVATION NOTES:

1) REFER TO GRADING PLANS C3.1 THROUGH C3.5 FOR FLOOR ELEVATIONS. THE STRUCTURAL DRAWINGS USE A DATUM ELEVATION OF 100' - 0".

2) COORDINATE ALL ELEVATIONS WITH ARCHITECTURAL DRAWINGS.

3) SLOPE STEEL UNIFORMLY TO COLUMN OR BENT BEAM ELEVATIONS SHOWN ON PLAN.

4) COORDINATE COLUMN ELEVATIONS WITH ROOF DRAINS, REFER TO ARCHITECTURAL DRAWINGS.

5) BOTTOM OF DECK ELEVATION TO BE 155' - 7" UNLESS NOTED OTHERWISE AS THUS (XX' - XX"), +/- (XX'-XX"), OR (HI / LO).

6) BOTTOM OF DECK ELEVATION TO BE 153' - 6" BETWEEN GRIDLINES 2-A AND 2-B UNLESS NOTED OTHERWISE AS THUS (XX' - XX"),+/- (XX'-XX"), OR (HI / LO).

7) BOTTOM OF DECK ELEVATION TO BE X' - X" FOR THE ROOF AREA BOUNDED BY GRIDLINES E 5 AND 17 AND GRIDLINES G AND 12 UNLESS NOTED OTHERWISE AS THUS (XX' - XX"),+/- (XX'-XX"), OR (HI / LO).

8) BOTTOM OF DECK ELEVATION TO BE X' - X" BETWEEN GRIDLINES D AND E UNLESS NOTED OTHERWISE AS THUS (XX' - XX"),+/- (XX'-XX"), OR (HI / LO).

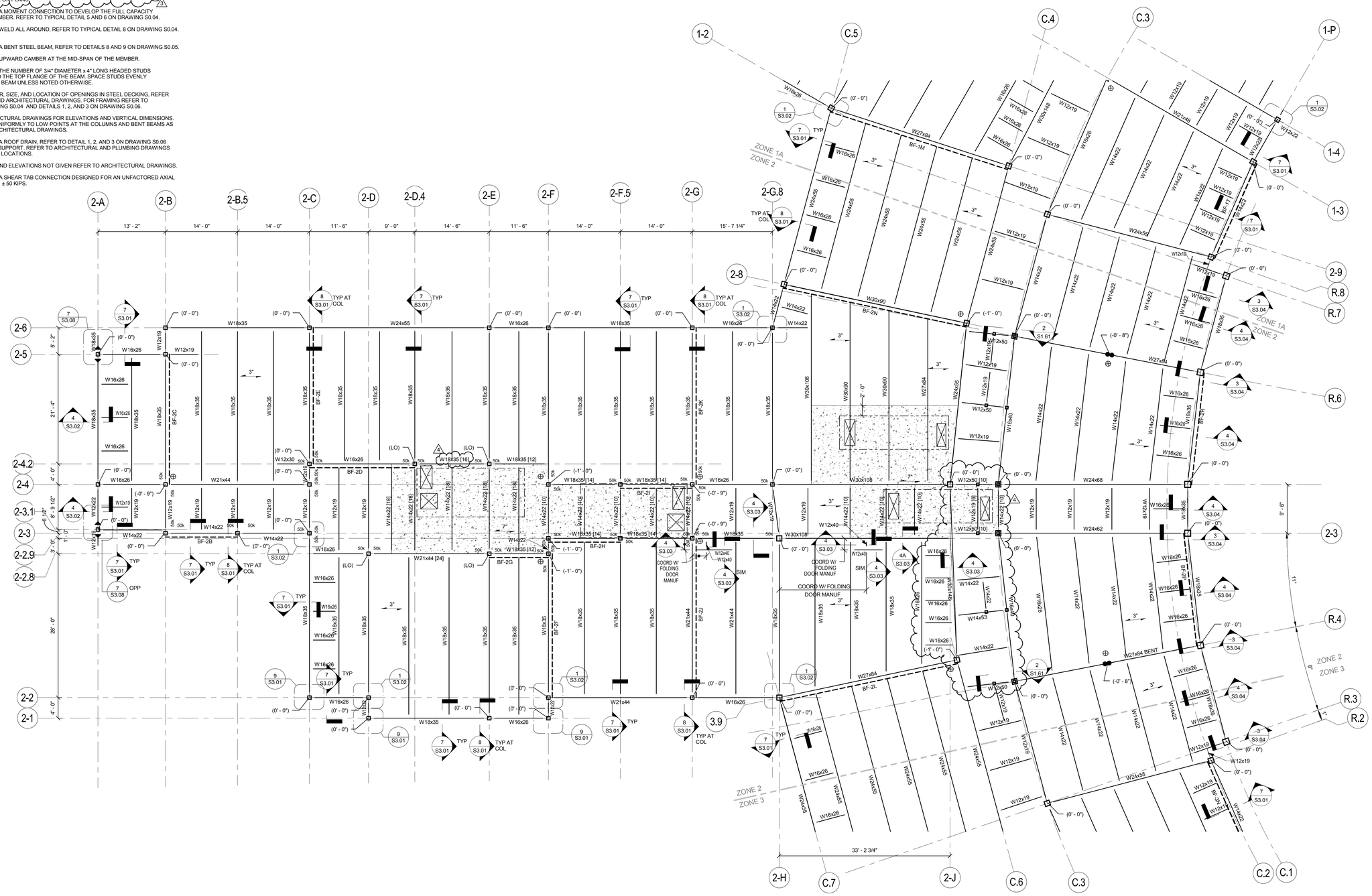

526 Boston Post Rd Wayland, MA
508.358.0790 www.ai3architects.com

Engineers Design Group Inc.
Structural Engineers
350 Main St. 2nd Flr
Malden, Ma 02148
(781)396-9007
(781)396-9008 (FAX)
EDG@EDGINC.COM

Copyright©2016 A3 Architects, LLC

BEVERLY MIDDLE SCHOOL

CABOT STREET
BEVERLY, MA 01915

BID PACKAGE #3
FOUNDATIONS, STRUCTURAL STEEL, & SITEWORK

NORTH ARROW | ADDENDUMIZED DRAWINGS

KEYPLAN

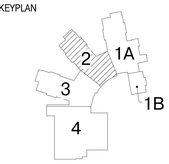

DRAWING NAME:

ROOF FRAMING PLAN ZONE 2

DRAWN BY: DH
REVIEWED BY: CJO
SCALE: 1/8" = 1'-0"
JOB NO: 2014-076
DATE: April 18, 2016
DRAWING NUMER: S1.52

5/20/2016 1:22:04 PM C:\Users\DHarris\Documents\Beverly - 2016_18May2016_105624_dharris.rvt

FRAMING NOTES:

1) FOR GENERAL NOTES AND TYPICAL DETAILS, SEE DRAWINGS S0.01, S0.02, S0.03, S0.04, S0.05, AND S0.06.

2.) CT INDICATES A COLUMN TERMINATES AT THIS LEVEL.

3.) OR OR INDICATES A STRUCTURAL MASONRY PARTITION WALL BELOW. REFER TO RELEVANT SECTIONS FOR REINFORCING. REFER TO SEISMIC CLIPPING DETAIL 4 ON DRAWING S0.03. PROVIDE MINIMUM REINFORCEMENT PER DETAIL 1 ON DRAWING S0.03.

4.) BF-1 INDICATES A BRACED BAY TYPE, SEE DRAWINGS S4.01 THRU S4.08 FOR ELEVATIONS AND DETAILS.

5.) 4 1/2" INDICATES SPAN DIRECTION OF 2" DEEP, 18 GAGE, GALVANIZED COMPOSITE STEEL DECK WITH 2 1/2" NORMAL WEIGHT CONCRETE TOPPING. TOTAL THICKNESS = 4 1/2". REINFORCE WITH 6 x 6 - W2.9 x W2.9 WWF TYPICAL UNLESS NOTED OTHERWISE.

6.) 4 1/2" 16 GA INDICATES SPAN DIRECTION OF 2" DEEP, 16 GAGE, GALVANIZED COMPOSITE STEEL DECK WITH 2 1/2" NORMAL WEIGHT CONCRETE TOPPING. TOTAL THICKNESS = 4 1/2". REINFORCE WITH 6 x 6 - W2.9 x W2.9 WWF TYPICAL UNLESS NOTED OTHERWISE.

7.) 3" INDICATES SPAN OF 3" DEEP x 18 GA TYPE N, GALVANIZED STEEL ROOF DECK.

8.) 3" AC INDICATES SPAN OF 3" DEEP x 18 GA TYPE NCAS, GALVANIZED ACOUSTICAL CELLULAR STEEL ROOF DECK.

9.) 7" INDICATES SPAN OF 3" DEEP 18 GA TYPE N GALVANIZED COMPOSITE STEEL DECK WITH 4" LIGHTWEIGHT CONCRETE TOPPING. TOTAL THICKNESS = 7" REINFORCE WITH 6 x 6 - W2.9 x W2.9 WWF. SEE DETAIL 3/S0.05 FOR DECK SUPPORT. PROVIDE OPENING REINFORCING AS SHOWN IN DETAIL 8/S0.06.

10.) FOR EDGE OF SLAB/DECK DIMENSIONS, REFER TO ARCHITECTURAL DRAWINGS FOR ADDITIONAL INFORMATION. REFER TO DETAIL 1 ON DRAWING S0.04 UNLESS NOTED OTHERWISE ON PLANS.

11.) INDICATES A MOMENT CONNECTION TO DEVELOP THE FULL CAPACITY OF THE MEMBER. REFER TO TYPICAL DETAIL 5 AND 6 ON DRAWING S0.04.

12.) INDICATES WELD ALL AROUND, REFER TO TYPICAL DETAIL 8 ON DRAWING S0.04.

13.) WF INDICATES A BENT STEEL BEAM, REFER TO DETAILS 8 AND 9 ON DRAWING S0.05.

14.) < X" > INDICATES UPWARD CAMBER AT THE MID-SPAN OF THE MEMBER.

15.) [XX] INDICATES THE NUMBER OF 3/4" DIAMETER x 4" LONG HEADED STUDS WELDED TO THE TOP FLANGE OF THE BEAM. SPACE STUDS EVENLY ALONG THE BEAM UNLESS NOTED OTHERWISE.

16.) FOR EXACT NUMBER, SIZE, AND LOCATION OF OPENINGS IN STEEL DECKING, REFER TO MECHANICAL AND ARCHITECTURAL DRAWINGS. FOR FRAMING REFER TO DETAIL 4 ON DRAWING S0.04 AND DETAILS 1, 2, AND 3 ON DRAWING S0.06.

17.) REFER TO ARCHITECTURAL DRAWINGS FOR ELEVATIONS AND VERTICAL DIMENSIONS. PITCH ALL STEEL UNIFORMLY TO LOW POINTS AT THE COLUMNS AND BENT BEAMS AS SHOWN ON THE ARCHITECTURAL DRAWINGS.

18.) INDICATES A ROOF DRAIN, REFER TO DETAIL 1, 2, AND 3 ON DRAWING S0.06 FOR DECK SUPPORT. REFER TO ARCHITECTURAL AND PLUMBING DRAWINGS FOR EXACT LOCATIONS.

19.) FOR DIMENSIONS AND ELEVATIONS NOT GIVEN REFER TO ARCHITECTURAL DRAWINGS.

20.) 50k INDICATES A SHEAR TAB CONNECTION DESIGNED FOR AN UNFACTORED AXIAL SEISMIC FORCE OF ± 50 KIPS.

FRAMING ELEVATION NOTES:

1) REFER TO GRADING PLANS C3.1 THROUGH C3.5 FOR FLOOR ELEVATIONS. THE STRUCTURAL DRAWINGS USE A DATUM ELEVATION OF 100' - 0".

2) COORDINATE ALL ELEVATIONS WITH ARCHITECTURAL DRAWINGS.

3) SLOPE STEEL UNIFORMLY TO COLUMN OR BENT BEAM ELEVATIONS SHOWN ON PLAN.

4) COORDINATE COLUMN ELEVATIONS WITH ROOF DRAINS, REFER TO ARCHITECTURAL DRAWINGS.

5) BOTTOM OF DECK ELEVATION TO BE 155' - 7" UNLESS NOTED OTHERWISE AS THUS (XX' - XX"), +/- (XX'-XX"), OR (HI / LO).

6) BOTTOM OF DECK ELEVATION TO BE X' - X" FOR THE AREA BOUNDED BY GRIDLINES 4 - 20 / 4-K AND 4-18 / 4-L.4 OTHERWISE AS THUS (XX' - XX"),+/- (XX'-XX"), OR (HI / LO).

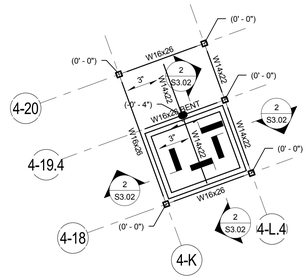

ELEV PART PLAN - AREA 3

SCALE : 1/8" = 1' - 0"

UNDERSIDE OF DECK EL = 173' - 6" (UNLESS NOTED OTHERWISE)

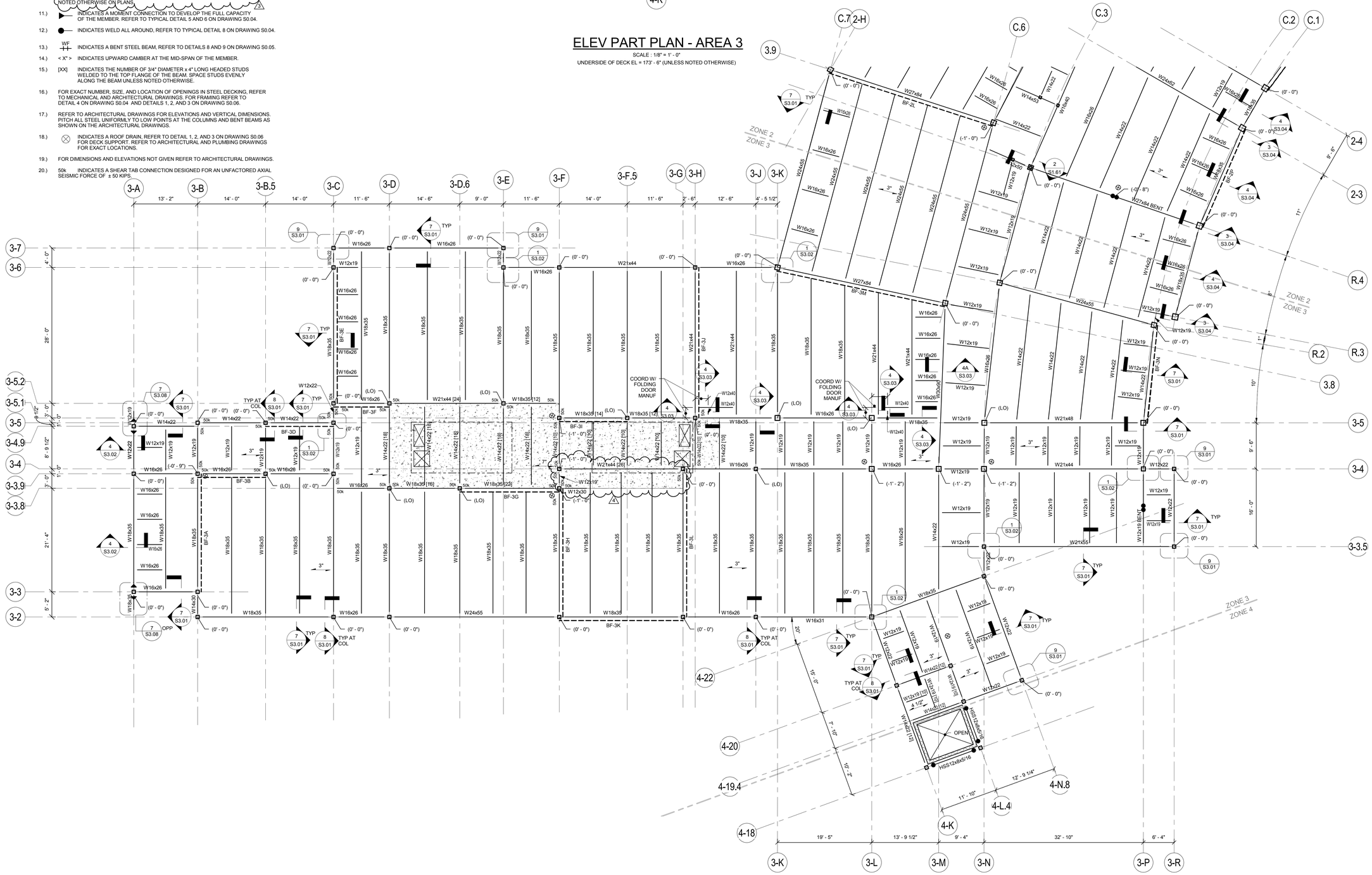

526 Boston Post Rd Wayland, MA
508.358.0790 www.ai3architects.com

Engineers Design Group Inc.
Structural Engineers
350 Main St. 2nd Flr
Malden, Ma 02148
(781)396-9007
(781)396-9008 (FAX)
EDG@EDGINC.COM

BEVERLY MIDDLE SCHOOL

CABOT STREET
BEVERLY, MA 01915

Copyright©2016 AI3 Architects, LLC

BID PACKAGE #3
FOUNDATIONS, STRUCTURAL STEEL, & SITEWORK

NORTH ARROW

ADDENDUMIZED DRAWINGS

KEYPLAN

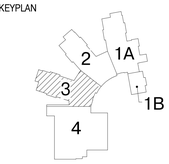

DRAWING NAME:

ROOF FRAMING PLAN ZONE 3

DRAWN BY: DH

REVIEWED BY: CJO

SCALE: 1/8" = 1'-0"

JOB NO: 2014-076

DATE: April 18, 2016

DRAWING NUMER: S1.53

5/20/2016 1:22:09 PM C:\Users\Dharris\Documents\Beverly - 2016_18May2016_105624_dharris.rvt

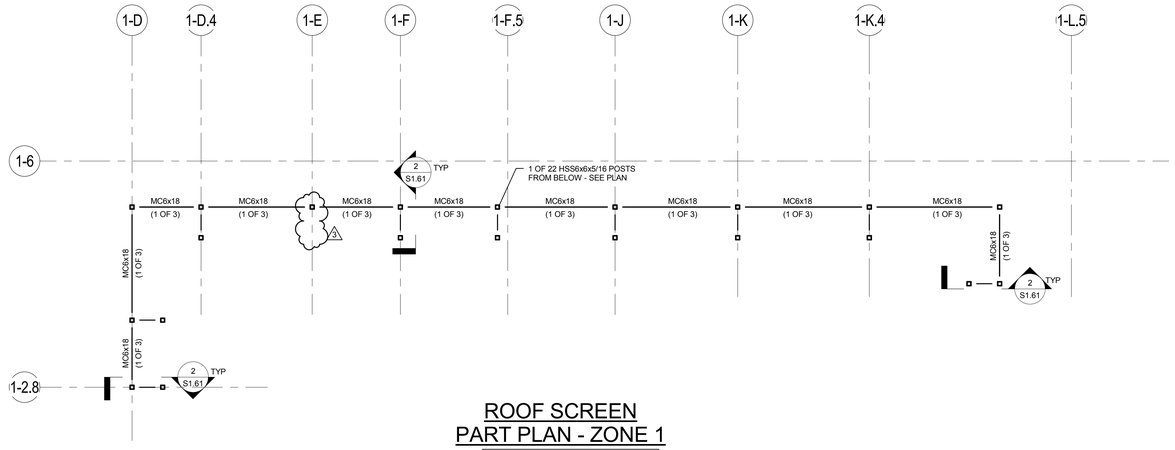

ROOF SCREEN PART PLAN - ZONE 1

NOTE:
COORDINATE DIMENSIONS AND ELEVATIONS WITH ARCHITECTURAL DRAWINGS AND SCREEN MANUFACTURER. REFER TO SHEET

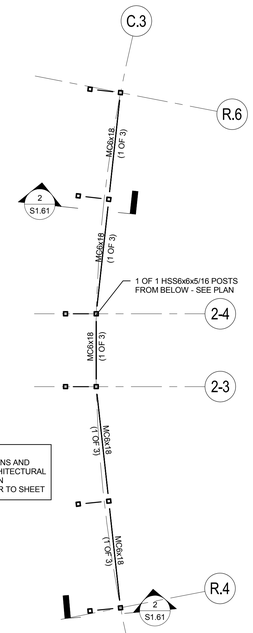

NOTE:
COORDINATE DIMENSIONS AND ELEVATIONS WITH ARCHITECTURAL DRAWINGS AND SCREEN MANUFACTURER. REFER TO SHEET

ROOF SCREEN PART PLAN - ZONES 2/3

NOTES:
1.) WHOLE ASSEMBLY AND ALL EXPOSED MEMBERS SUPPORTING THE SCREENS TO BE HOT DIPPED GALVANIZED. PLUG WELD ALL HOLES AND PAINT WELDS WITH ZINC RICH PAINT THAT ARE REQUIRED FOR THE GALVANIZING PROCESS
2.) ALL WELDS TO BE CONTINUOUS ALL MEMBER TO MEMBER CONNECTIONS TO BE WELDED ALL AROUND UNLESS NOTED OTHERWISE.
3.) REFER TO ARCH DWGS FOR DIMENSIONS, ELEVATIONS, LOCATIONS AND ADDITIONAL DETAILS
4.) SLOPE BASE PLATES AS REQUIRED ABOVE SLOPED BEAMS
5.) SHIM BASE PLATES WITH STEEL PLATES FOR FULL BEARING AS REQ'D FOR ERECTION TOLERANCES. WELD ALL SHIMS TO BASE PLATE AND SUPPORTING STEEL BEAM.

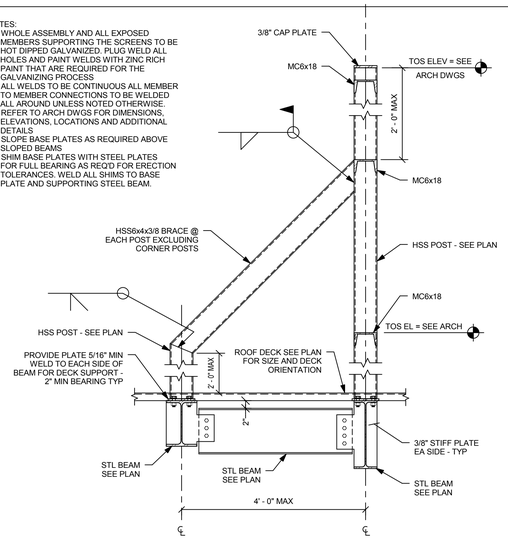

1

SCALE: 3/4" = 1' - 0"

NOTES:
1.) WHOLE ASSEMBLY AND ALL EXPOSED MEMBERS SUPPORTING THE SCREENS TO BE HOT DIPPED GALVANIZED. PLUG WELD ALL HOLES AND PAINT WELDS WITH ZINC RICH PAINT THAT ARE REQUIRED FOR THE GALVANIZING PROCESS
2.) ALL WELDS TO BE CONTINUOUS ALL MEMBER TO MEMBER CONNECTIONS TO BE WELDED ALL AROUND UNLESS NOTED OTHERWISE.
3.) REFER TO ARCH DWGS FOR DIMENSIONS, ELEVATIONS, LOCATIONS AND ADDITIONAL DETAILS
4.) SLOPE BASE PLATES AS REQUIRED ABOVE SLOPED BEAMS
5.) SHIM BASE PLATES WITH STEEL PLATES FOR FULL BEARING AS REQ'D FOR ERECTION TOLERANCES. WELD ALL SHIMS TO BASE PLATE AND SUPPORTING STEEL BEAM.

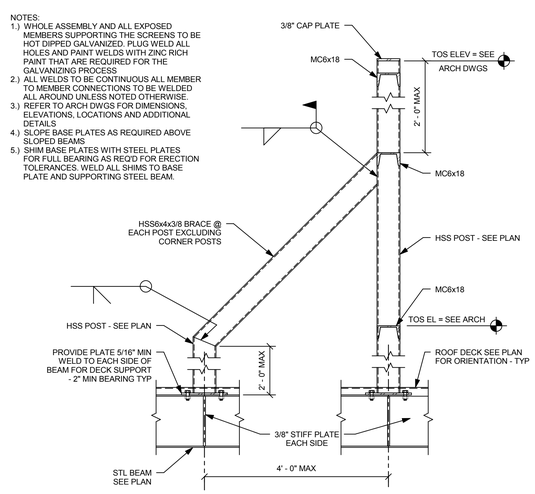

2

SCALE: 3/4" = 1' - 0"

526 Boston Post Rd
508.358.0790
Wayland, MA
www.ai3architects.com

Engineers Design Group Inc.
Structural Engineers
350 Main St. 2nd Flr
Malden, Ma 02148
(781)396-9007
(781)396-9008 (FAX)
EDG@EDGINC.COM

Copyright©2016 AI3 Architects, LLC

BEVERLY
MIDDLE
SCHOOL

CABOT STREET
BEVERLY, MA 01915

BID PACKAGE #3
FOUNDATIONS,
STRUCTURAL STEEL,
& SITEWORK

NORTH ARROW | ADDENDUMIZED DRAWINGS

KEYPLAN

DRAWING NAME:

ROOF SCREEN
PART PLANS

DRAWN BY: DH
REVIEWED BY: CJO
SCALE: As indicated
JOB NO: 2014-076
DATE: April 18, 2016
DRAWING NUMER:
S1.61

5/20/2016 1:22:10 PM C:\Users\DHarris\Documents\Beverly - 2016_18May2016_105624_dharris.rvt

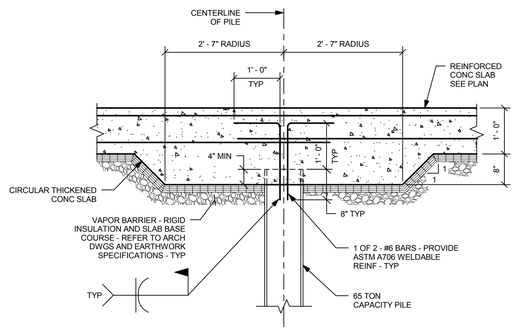

1

PILE TYPE P1

SCALE: 3/4" = 1' - 0"

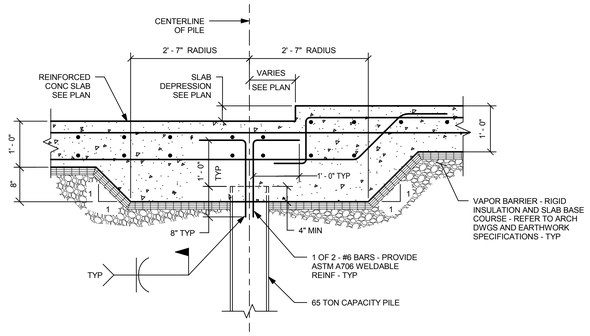

2

PILE TYPE P1 AT SLAB DEPRESSION

SCALE: 3/4" = 1' - 0"

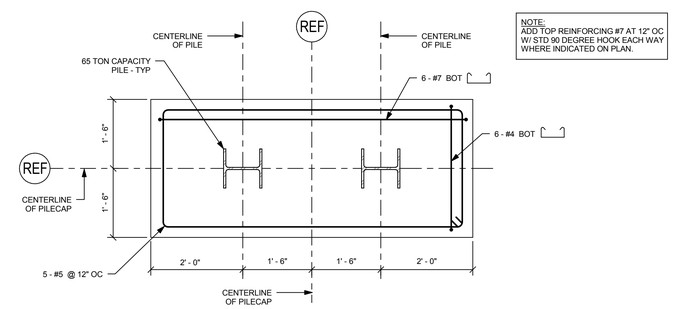

3

PILECAP TYPE PC-2

40" DEEP

SCALE: 3/4" = 1' - 0"

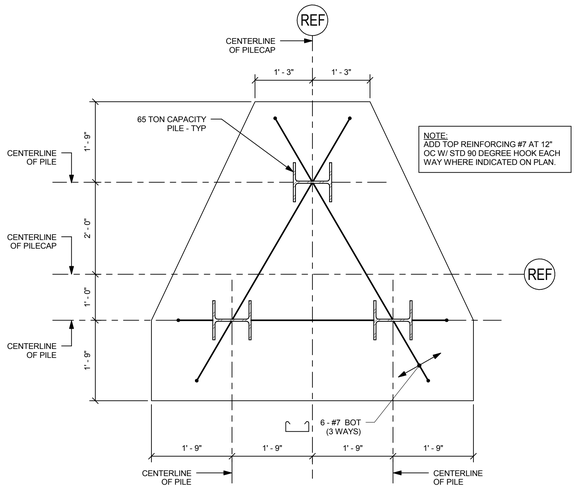

4

PILECAP TYPE PC-3

40" DEEP

SCALE: 3/4" = 1' - 0"

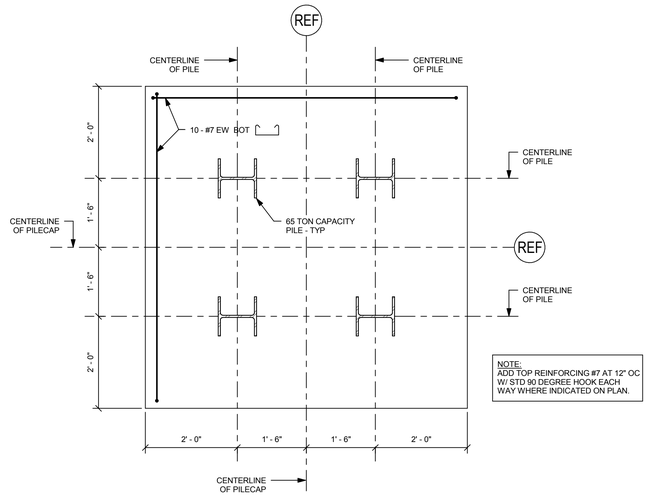

5

PILECAP TYPE PC-4

40" DEEP

SCALE: 3/4" = 1' - 0"

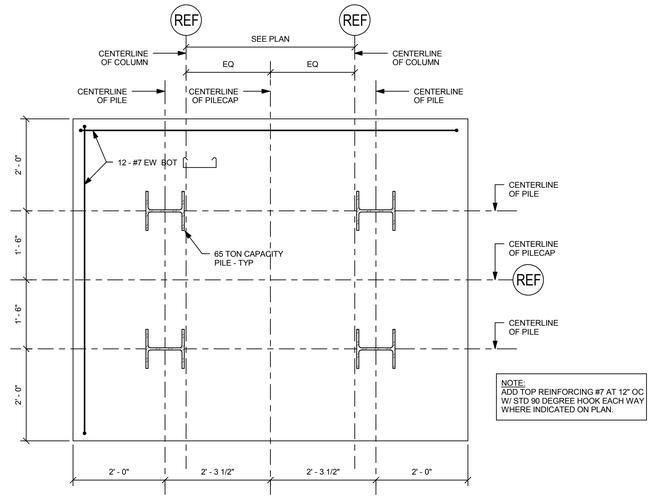

6

PILECAP TYPE PC-4A

40" DEEP

SCALE: 3/4" = 1' - 0"

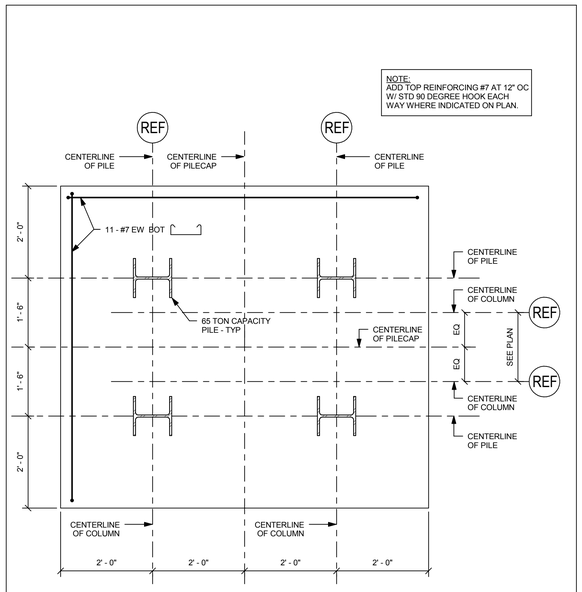

7

PILECAP TYPE PC-4B

40" DEEP

SCALE: 3/4" = 1' - 0"

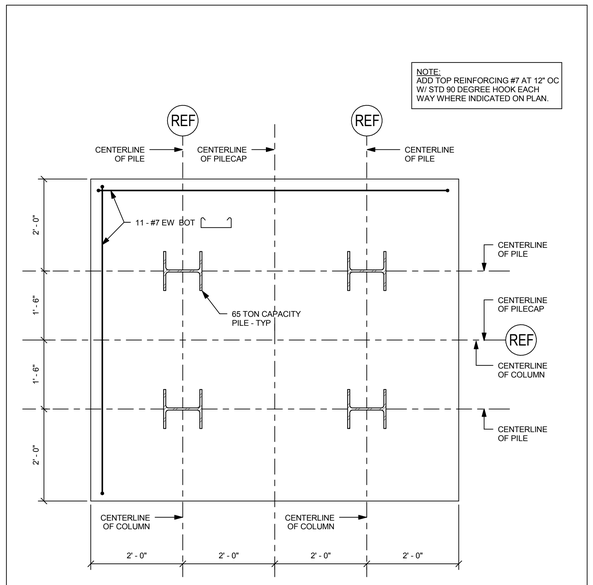

8

PILECAP TYPE PC-4C

40" DEEP

SCALE: 3/4" = 1' - 0"

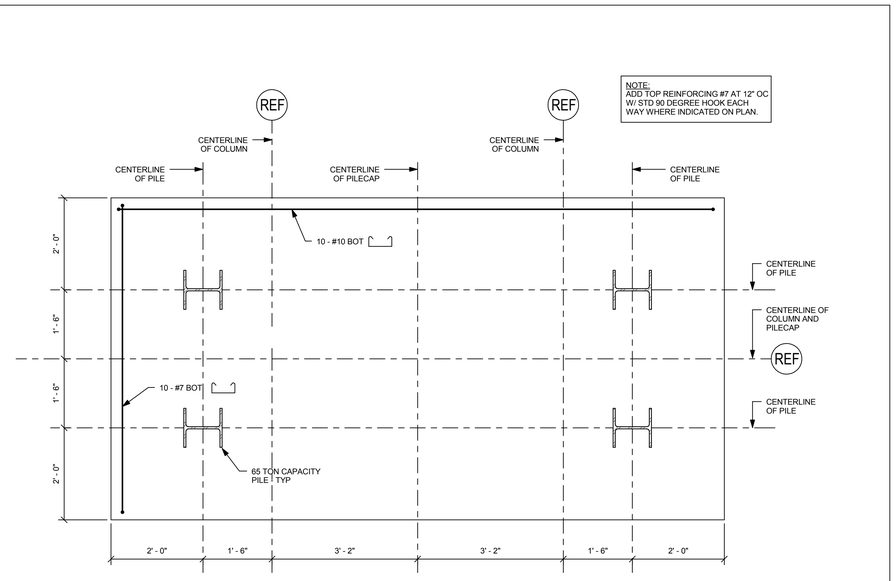

9

PILECAP TYPE PC-4D

40" DEEP

SCALE: 3/4" = 1' - 0"

architects
526 Boston Post Rd Wayland, MA
508.358.0790 www.ai3architects.com

Engineers Design Group Inc.
Structural Engineers
350 Main St. 2nd Flr
Malden, Ma 02148
(781)396-9007
(781)396-9008 (FAX)
EDG@EDGINC.COM

Copyright©2016 A13 Architects, LLC

BEVERLY MIDDLE SCHOOL

CABOT STREET
BEVERLY, MA 01915

BID PACKAGE #3
FOUNDATIONS, STRUCTURAL STEEL, & SITEWORK

NORTH ARROW | ADDENDUMIZED DRAWINGS

KEYPLAN

DRAWING NAME:

PILECAP DETAILS

DRAWN BY: DH
REVIEWED BY: CJO
SCALE: 3/4" = 1'-0"
JOB NO: 2014-076
DATE: April 18, 2016
DRAWING NUMER: S2.01

5/20/2016 1:22:13 PM C:\Users\DHarris\Documents\Beverly - 2016_18May2016_105624_dharris.rvt

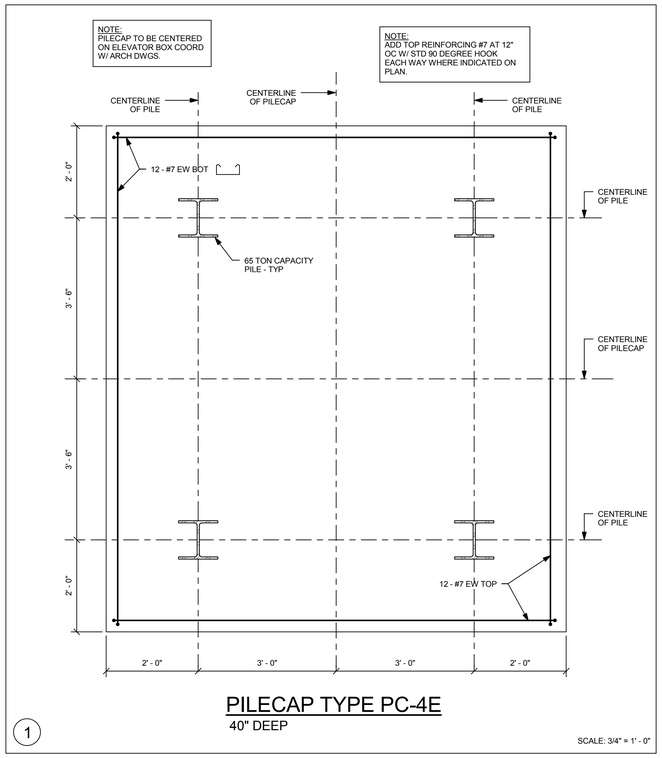

PILECAP TYPE PC-4E

40" DEEP

1

SCALE: 3/4" = 1' - 0"

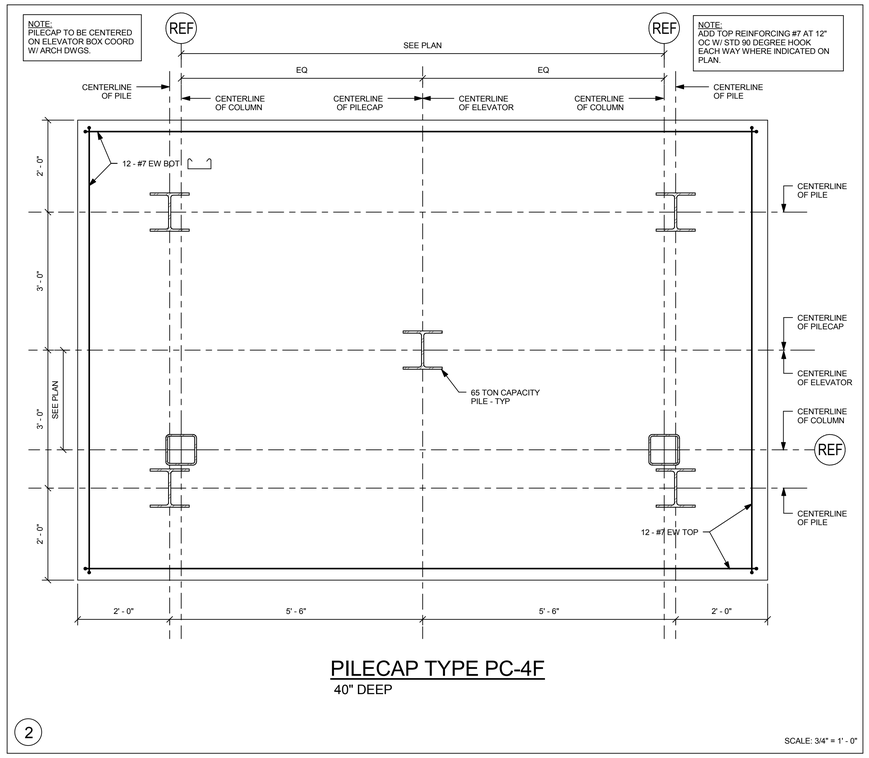

PILECAP TYPE PC-4F

40" DEEP

2

SCALE: 3/4" = 1' - 0"

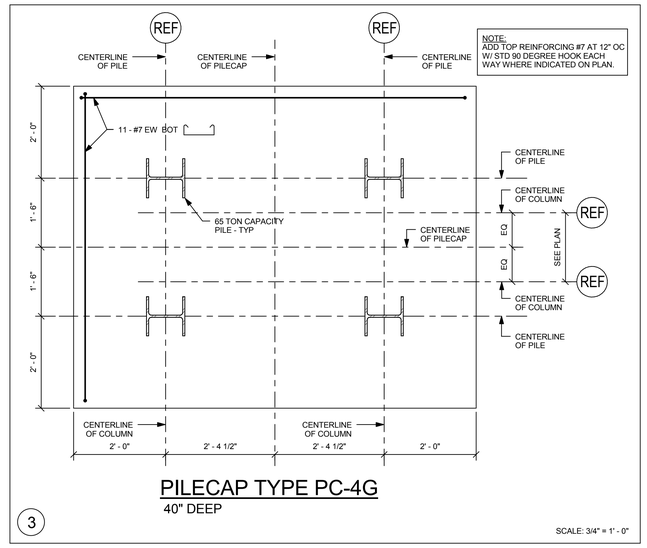

PILECAP TYPE PC-4G

40" DEEP

3

SCALE: 3/4" = 1' - 0"

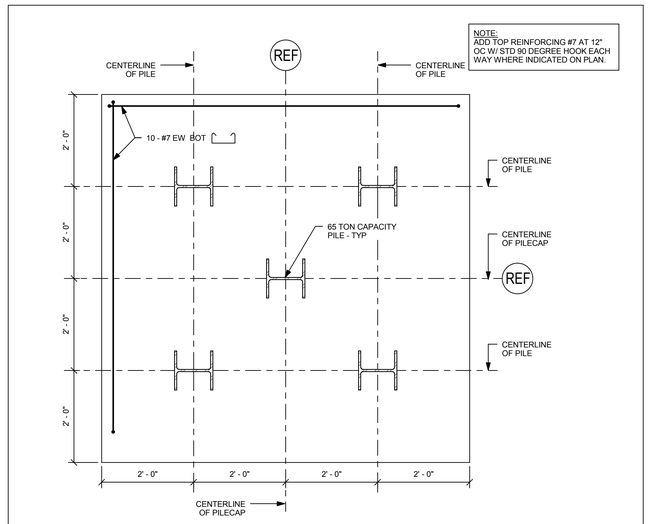

PILECAP TYPE PC-5

40" DEEP

4

SCALE: 3/4" = 1' - 0"

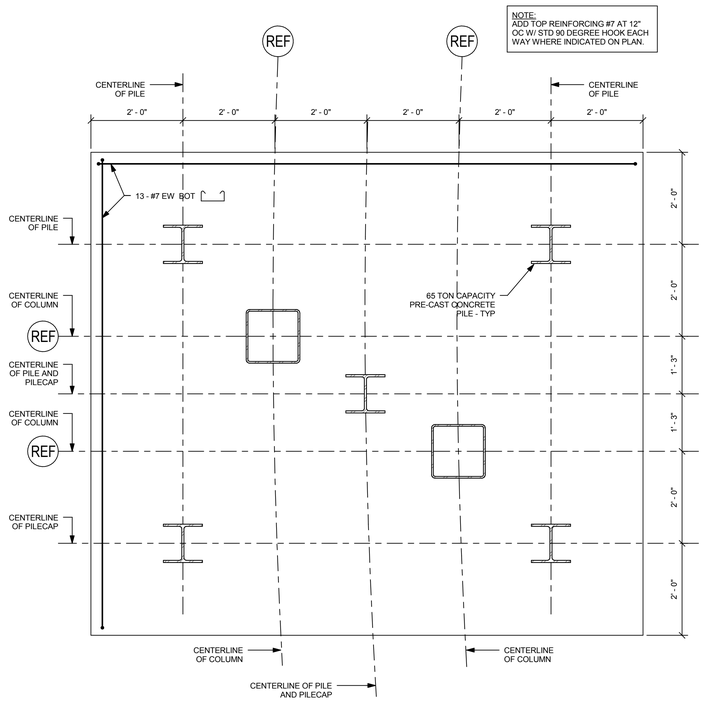

PILECAP TYPE PC-5A

40" DEEP

5

SCALE: 3/4" = 1' - 0"

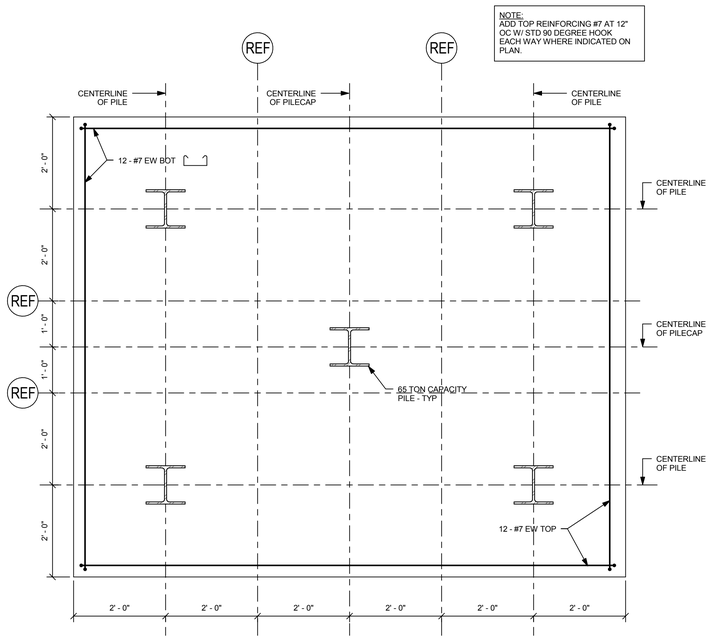

PILECAP TYPE PC-5B

40" DEEP

6

SCALE: 3/4" = 1' - 0"

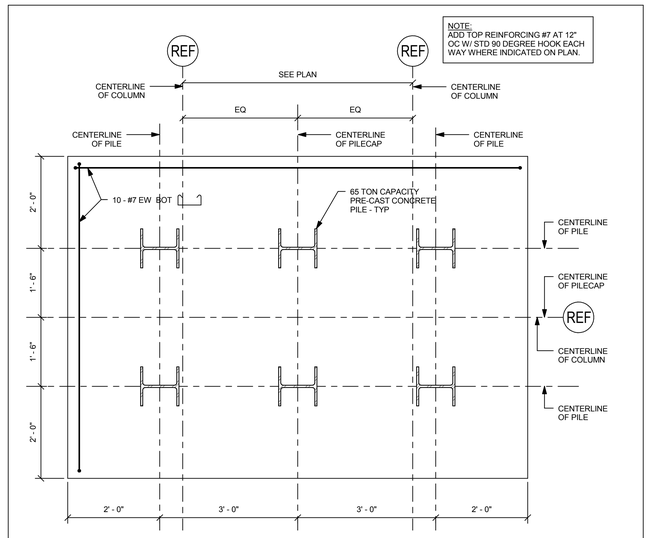

PILECAP TYPE PC-6

40" DEEP

7

SCALE: 3/4" = 1' - 0"

ai3 architects
526 Boston Post Rd Wayland, MA
508.358.0790 www.ai3architects.com

EDG
Engineers Design Group Inc.
Structural Engineers
350 Main St. 2nd Flr
Malden, Ma 02148
(781)396-9007
(781)396-9008 (FAX)
EDG@EDGINC.COM

Copyright©2016 Ai3 Architects, LLC

BEVERLY MIDDLE SCHOOL

CABOT STREET
BEVERLY, MA 01915

BID PACKAGE #3
FOUNDATIONS, STRUCTURAL STEEL, & SITEWORK

NORTH ARROW | ADDENDUMIZED DRAWINGS

KEYPLAN

DRAWING NAME:

PILECAP DETAILS

DRAWN BY: DH
REVIEWED BY: CJO
SCALE: 3/4" = 1'-0"
JOB NO: 2014-076
DATE: April 18, 2016
DRAWING NUMER: S2.01A

5/20/2016 1:22:15 PM C:\Users\DHarris\Documents\Beverly - 2016_18May2016_105624_dharris.rvt

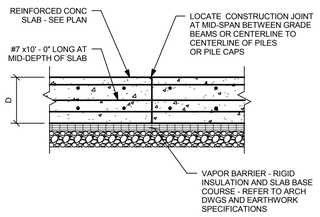

TYPICAL CONSTRUCTION JOINT IN SUPPORTED SLAB CAST ON GRADE DETAIL

NOTE:
ALL WORK BELOW THE BOTTOM OF THE SLAB, INCLUDING BUT NOT LIMITED TO, SOIL SUBGRADE PREPARATION, COMPACTION, TRENCHING, PIPING, CONDUIT, VAPOR BARRIER, RIGID INSULATION SHALL BE COMPLETE ON BOTH SIDES OF THE CONSTRUCTION JOINT FOR AT LEAST TEN FEET FROM THE CONSTRUCTION JOINT. FIELD BENDING OF THE STEEL REINFORCEMENT IS NOT PERMITTED.

1

SCALE: 3/4" = 1' - 0"

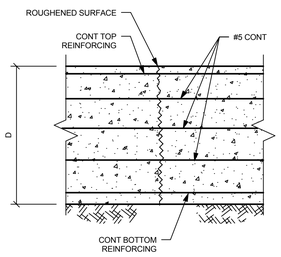

TYPICAL CONSTRUCTION JOINT IN GRADE BEAM DETAIL

NOTES:

1.) SPACE AT MAXIMUM 60 FEET ON CENTER. SEE PLAN FOR LOCATIONS UNLESS NOTED OTHERWISE ON PLAN.

2.) LOCATE CONSTRUCTION JOINT AT MID-SPAN BETWEEN CENTERLINE TO CENTERLINE OF PILES OR PILE CAPS.

2

SCALE: 3/4" = 1' - 0"

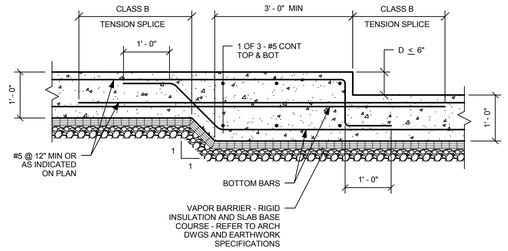

TYPICAL STEP IN STRUCTURAL SUPPORTED SLAB CAST ON GRADE DETAIL

3

SCALE: 3/4" = 1' - 0"

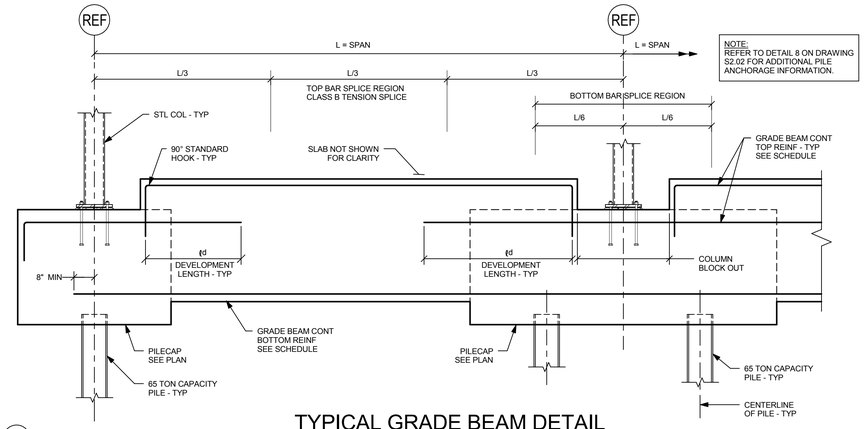

NOTE:
REFER TO DETAIL 8 ON DRAWING S2.02 FOR ADDITIONAL PILE ANCHORAGE INFORMATION.

TYPICAL GRADE BEAM DETAIL

4

SCALE:NOT TO SCALE

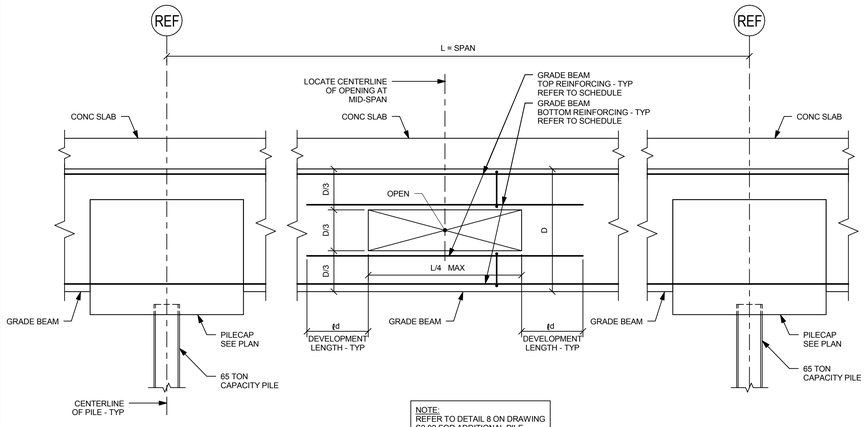

NOTE:
REFER TO DETAIL 8 ON DRAWING S2.02 FOR ADDITIONAL PILE ANCHORAGE INFORMATION.

5

SCALE: 3/4" = 1' - 0"

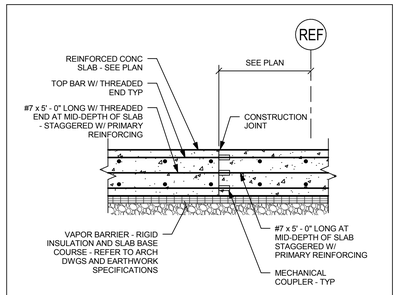

SLAB CONSTRUCTION JOINT DETAIL

NOTE:
JOINT PERMITTED ONLY WHERE INDICATED ON PLAN.

6

SCALE: 3/4" = 1' - 0"

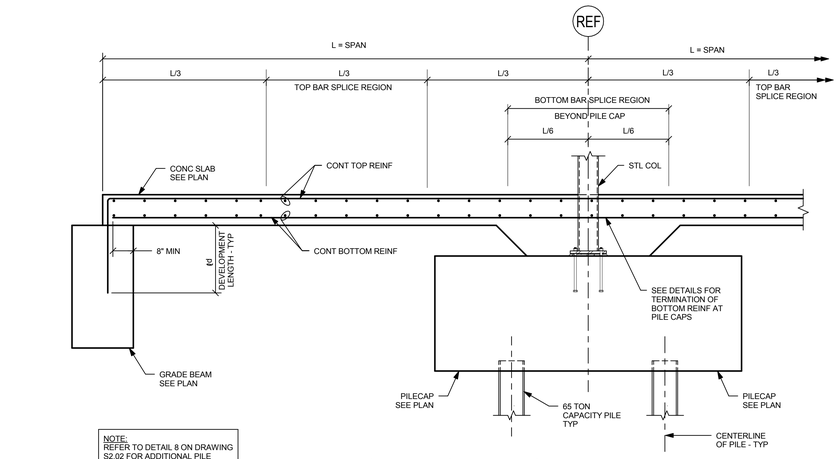

NOTE:
REFER TO DETAIL 8 ON DRAWING S2.02 FOR ADDITIONAL PILE ANCHORAGE INFORMATION.

TYPICAL TWO - WAY SLAB DETAIL

7

SCALE:NOT TO SCALE

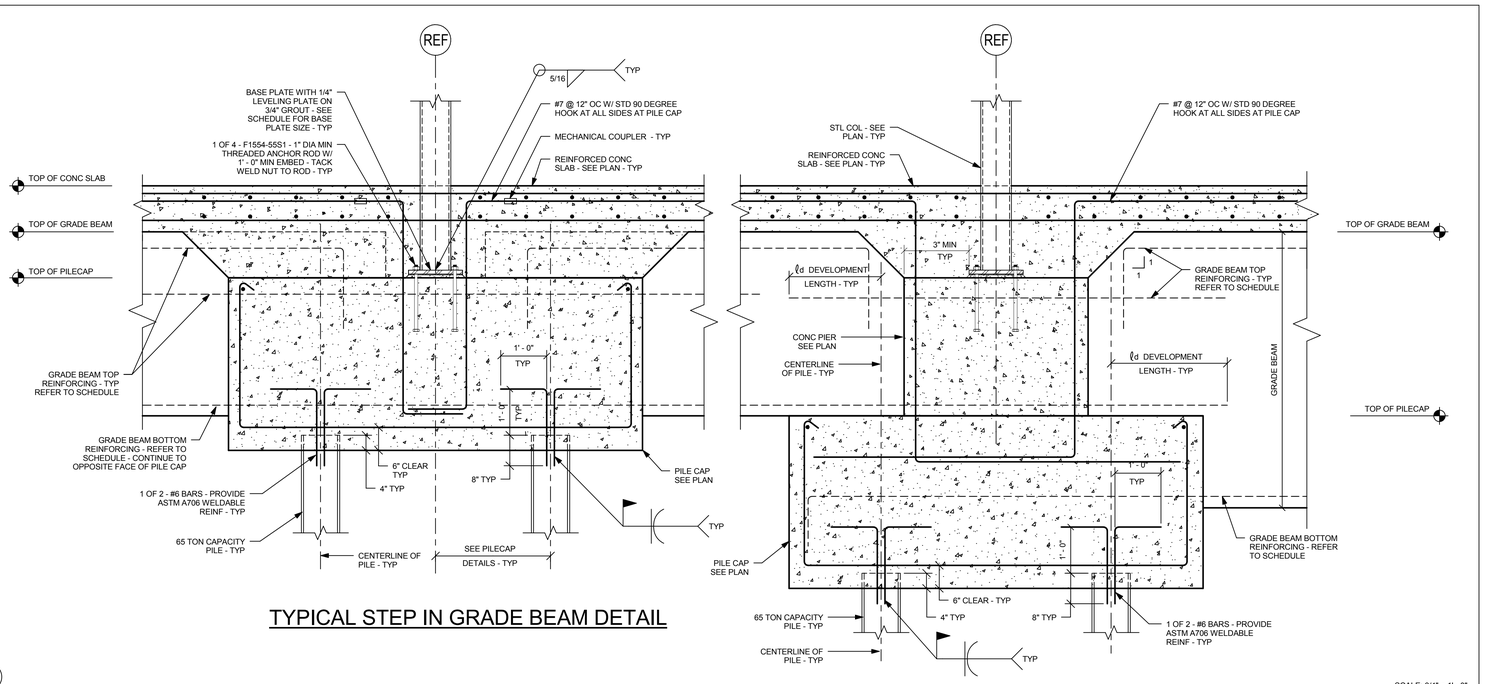

TYPICAL STEP IN GRADE BEAM DETAIL

8

SCALE: 3/4" = 1' - 0"

GRADE BEAM SCHEDULE					
MARK	WIDTH (in)	DEPTH (in)	TOP REINF BARS	BOTTOM REINF BARS	REMARKS
GB-1	24"	SEE SECTION	3 - #7	8 - #8	
GB-2	24"	SEE SECTION	3 - #7	3 - #9	
GB-3	36"	SEE SECTION	2 x 4 - #5	2 x 4 - #5	
GB-4	54"	SEE SECTION	2 x 4 - #5	2 x 4 - #5	
GB-5	40"	SEE SECTION	2 x 4 - #5	2 x 4 - #5	PILES ARE CENTERED ON COL LINE NOT GRADE BEAM
GB-6	40"	SEE SECTION	2 x 4 - #5	2 x 4 - #5	PILES ARE CENTERED ON COL LINE NOT GRADE BEAM

NOTE:
GRADE BEAM REINFORCING SHALL BE CONTINUOUS THROUGH PILE CAPS. REFER TO DETAIL 8 ON DRAWING S2.02 FOR ADDITIONAL INFORMATION.

9

SCALE: NONE

A13 architects
526 Boston Post Rd Wayland, MA
508.358.0790 www.ai3architects.com

EDG
Engineers Design Group Inc.
Structural Engineers
350 Main St. 2nd Flr
Malden, Ma 02148
(781)396-9007
(781)396-9008 (FAX)
EDG@EDGINC.COM

Copyright©2016 A13 Architects, LLC

BEVERLY MIDDLE SCHOOL

CABOT STREET
BEVERLY, MA 01915

BID PACKAGE #3
FOUNDATIONS, STRUCTURAL STEEL, & SITEWORK

NORTH ARROW | ADDENDUMIZED DRAWINGS

KEYPLAN

DRAWING NAME:
GRADE BEAM SCHEDULE AND TYP FOUNDATION DETAILS

DRAWN BY: DH
REVIEWED BY: CJO
SCALE: As indicated
JOB NO: 2014-076
DATE: April 18, 2016
DRAWING NUMER: S2.02

5/20/2016 1:22:17 PM C:\Users\DHarris\Documents\Beverly - 2016_18May2016_105624_dharris.rvt

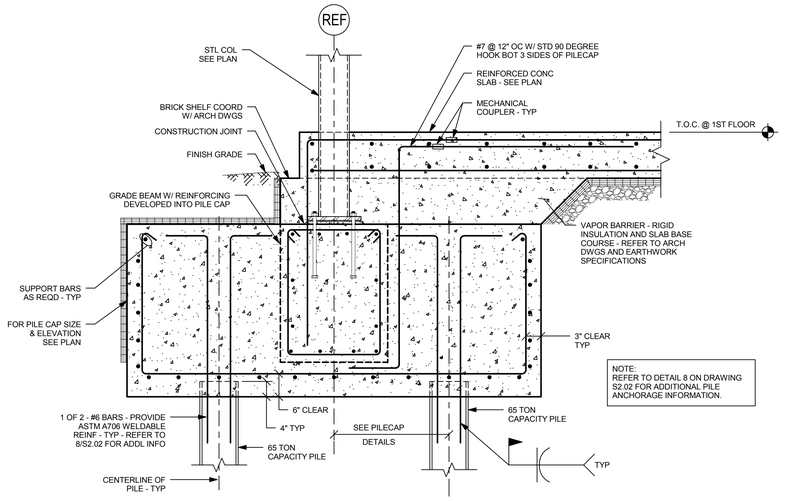

TYPICAL EXTERIOR GRADE BEAM AT COLUMN

NOTE: PLACE PILE CAP AND GRADE BEAM MONOLITHICALLY.

1

SCALE: 3/4" = 1' - 0"

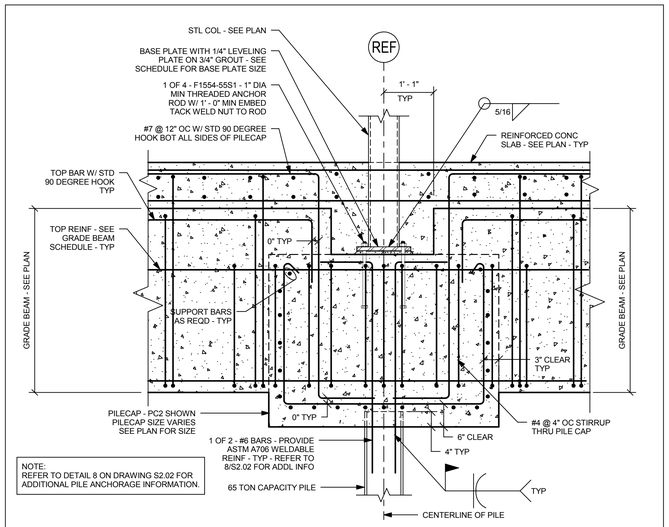

TYPICAL EXTERIOR GRADE BEAM AT COLUMN

NOTE: PLACE PILE CAP AND GRADE BEAM MONOLITHICALLY.

2

SCALE: 3/4" = 1' - 0"

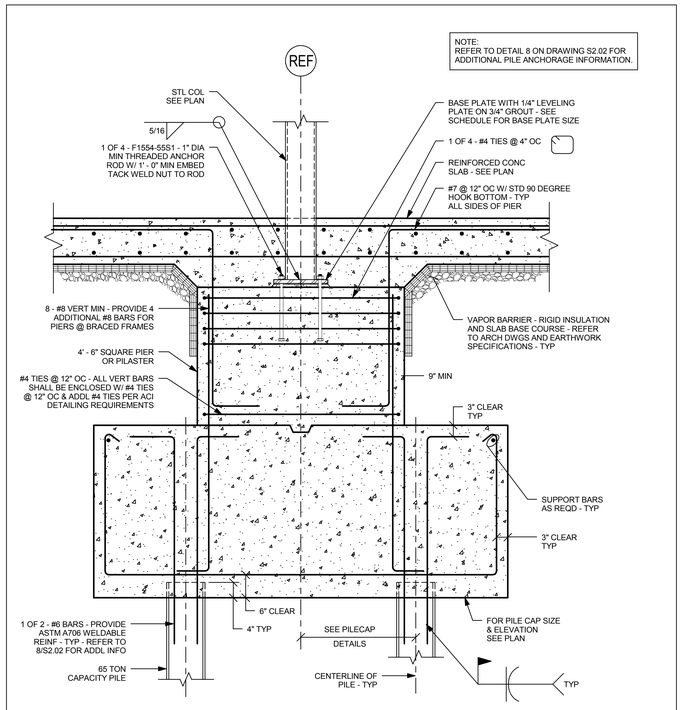

TYPICAL COLUMN BASE AND FOUNDATION WITH PIER OR PILASTER DETAIL

3

SCALE: 3/4" = 1' - 0"

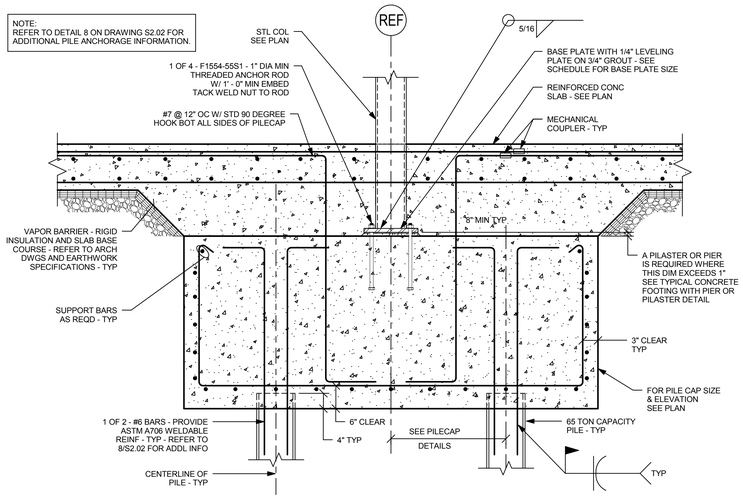

TYPICAL COLUMN BASE AND FOUNDATION WITHOUT PIER OR PILASTER DETAIL

PILE CAP TYPE PC-2 LONGITUDINAL, PC-3 AND PC-4

4

SCALE: 3/4" = 1' - 0"

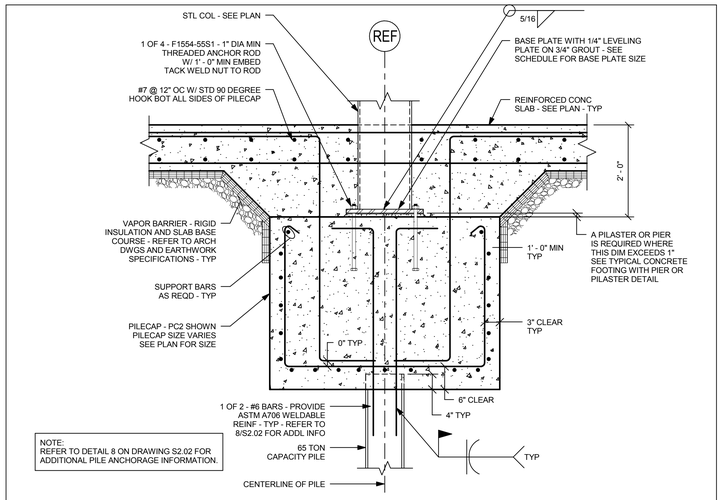

TYPICAL COLUMN BASE AND FOUNDATION WITHOUT PIER OR PILASTER DETAIL

PILE CAP TYPE PC-2 TRANSVERSE

5

SCALE: 3/4" = 1' - 0"

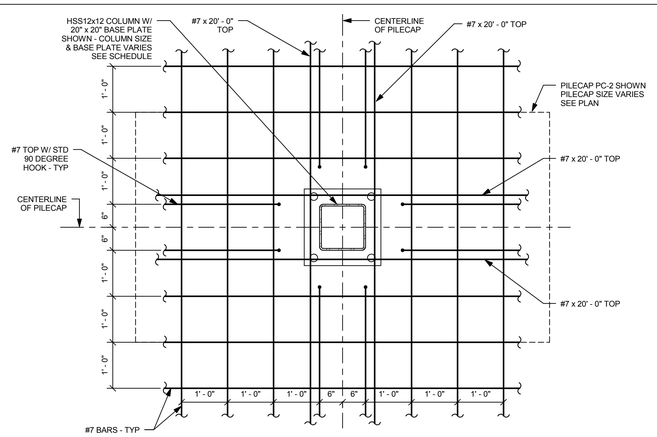

PLAN DETAIL - TOP SLAB REINFORCING AT TYPICAL INTERIOR COLUMN

6

SCALE: 1/2" = 1' - 0"

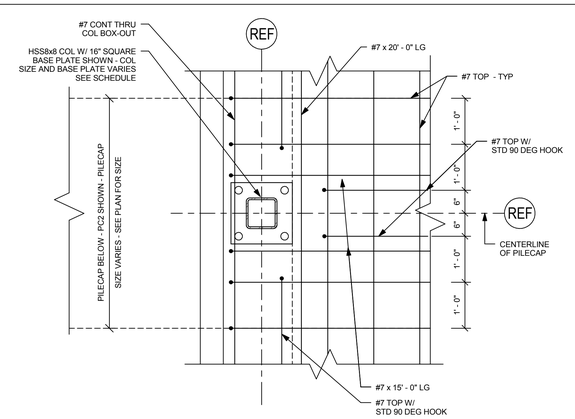

PLAN DETAIL - TOP SLAB REINFORCING AT TYPICAL EXTERIOR COLUMN

7

SCALE: 3/4" = 1' - 0"

8

SCALE: 3/4" = 1' - 0"

architects
526 Boston Post Rd Wayland, MA
508.358.0790 www.ai3architects.com

EDG
Engineers Design Group Inc.
Structural Engineers
350 Main St. 2nd Flr
Malden, Ma 02148
(781)396-9007
(781)396-9008 (FAX)
EDG@EDGINC.COM

BEVERLY MIDDLE SCHOOL

CABOT STREET
BEVERLY, MA 01915

Copyright©2016 Ai3 Architects, LLC

BID PACKAGE #3
FOUNDATIONS, STRUCTURAL STEEL, & SITEWORK

NORTH ARROW | ADDENDUMIZED DRAWINGS

KEYPLAN

DRAWING NAME:

FOUNDATION SECTIONS

DRAWN BY: DH
REVIEWED BY: CJO
SCALE: 3/4" = 1'-0"
JOB NO: 2014-076
DATE: April 18, 2016
DRAWING NUMER: S2.03

5/20/2016 1:22:19 PM C:\Users\DHarris\Documents\Beverly - 2016_18May2016_105624_dharris.rvt

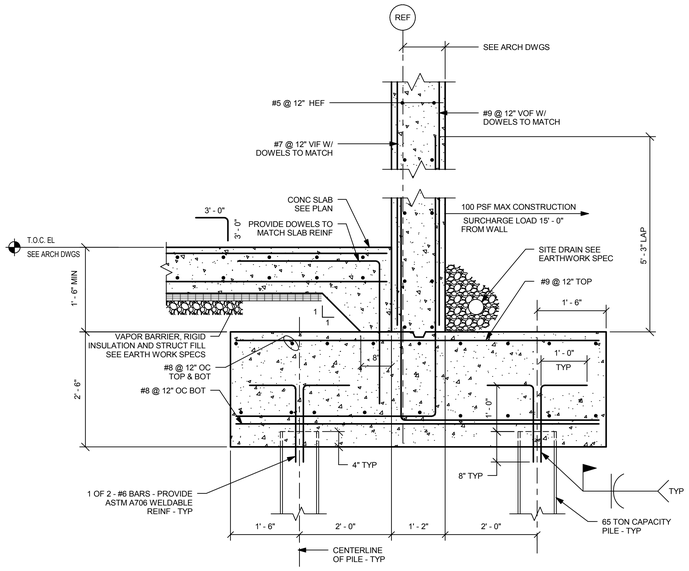

1

SCALE: 3/4" = 1' - 0"

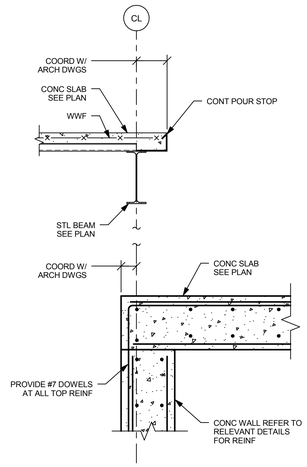

2

SCALE: 3/4" = 1' - 0"

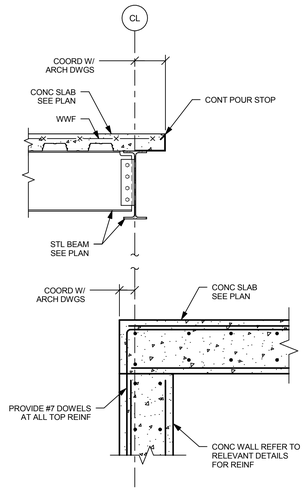

3

SCALE: 3/4" = 1' - 0"

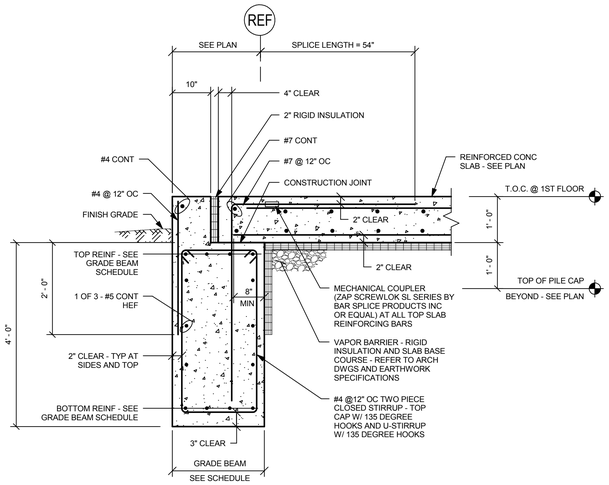

4

SCALE: 3/4" = 1' - 0"

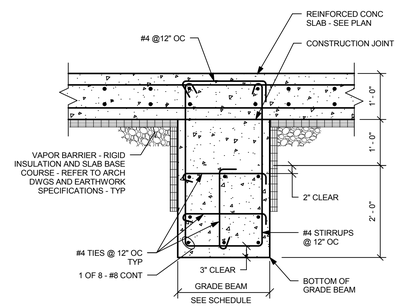

5

SCALE: 3/4" = 1' - 0"

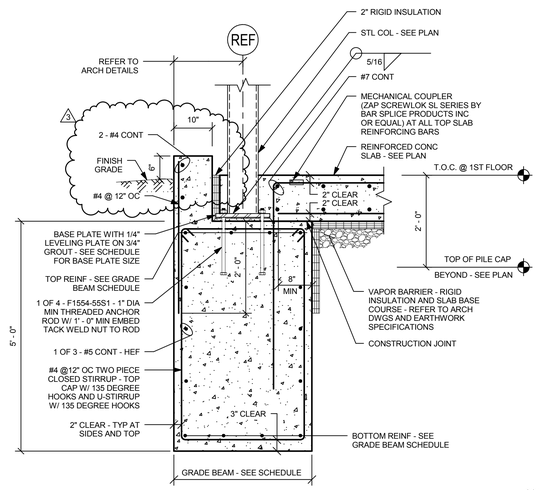

6

SCALE: 3/4" = 1' - 0"

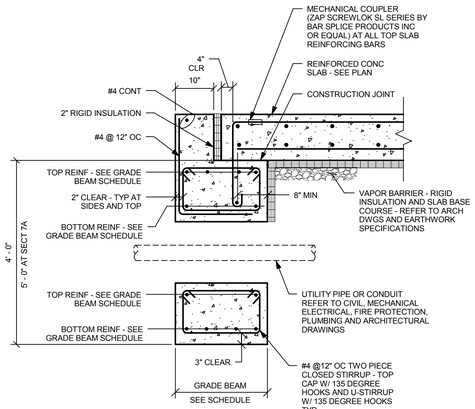

7 7A

GRADE BEAM UTILITY PENETRATION DETAIL

SCALE: 3/4" = 1' - 0"

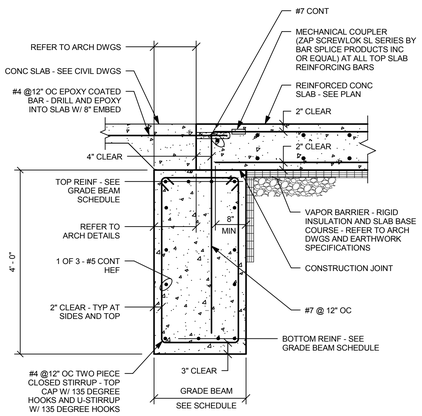

8

DOOR ENTRANCE DETAIL

SCALE: 3/4" = 1' - 0"

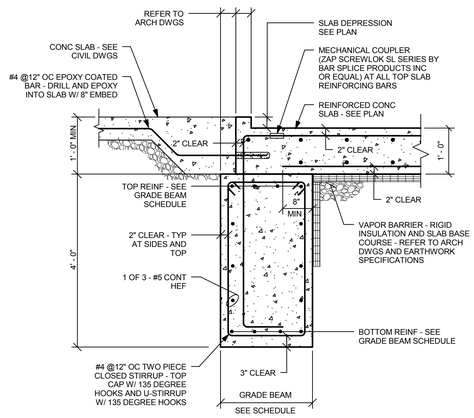

9

DOOR ENTRANCE WITH SLAB RECESS DETAIL

SCALE: 3/4" = 1' - 0"

ai3 architects
526 Boston Post Rd Wayland, MA
508.358.0790 www.ai3architects.com

EDG
Engineers Design Group Inc.
Structural Engineers
350 Main St. 2nd Flr
Malden, Ma 02148
(781)396-9007
(781)396-9008 (FAX)
EDG@EDGINC.COM

Copyright©2016 A13 Architects, LLC

BEVERLY MIDDLE SCHOOL

CABOT STREET
BEVERLY, MA 01915

BID PACKAGE #3
FOUNDATIONS, STRUCTURAL STEEL, & SITEWORK

NORTH ARROW | ADDENDUMIZED DRAWINGS

KEYPLAN

DRAWING NAME:

FOUNDATION SECTIONS

DRAWN BY: DH
REVIEWED BY: CJO
SCALE: 3/4" = 1'-0"
JOB NO: 2014-076
DATE: April 18, 2016
DRAWING NUMER: S2.04

5/20/2016 1:22:21 PM C:\Users\DHarris\Documents\Beverly - 2016_18May2016_105624_dharris.rvt

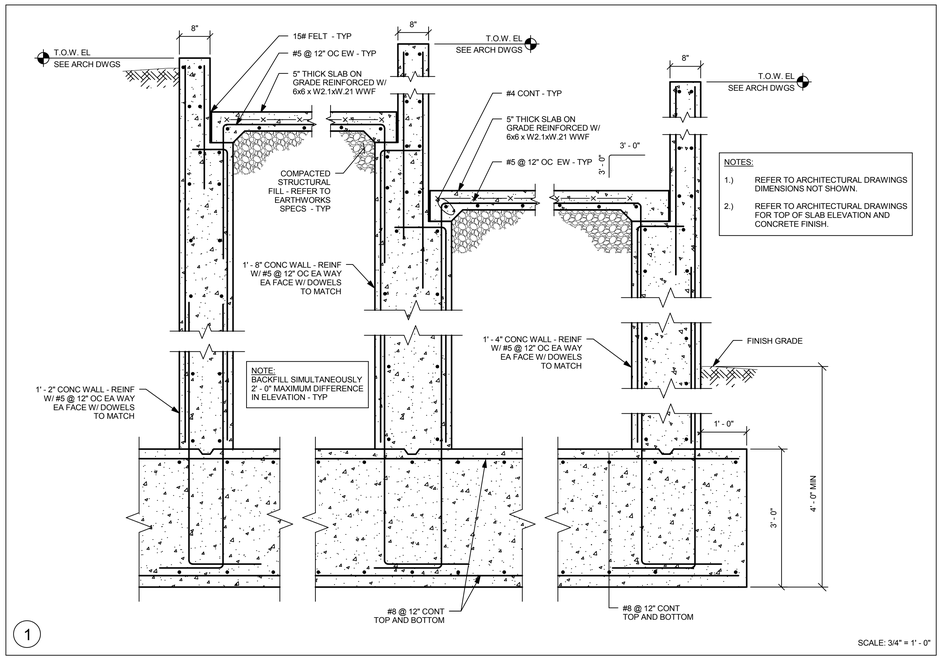

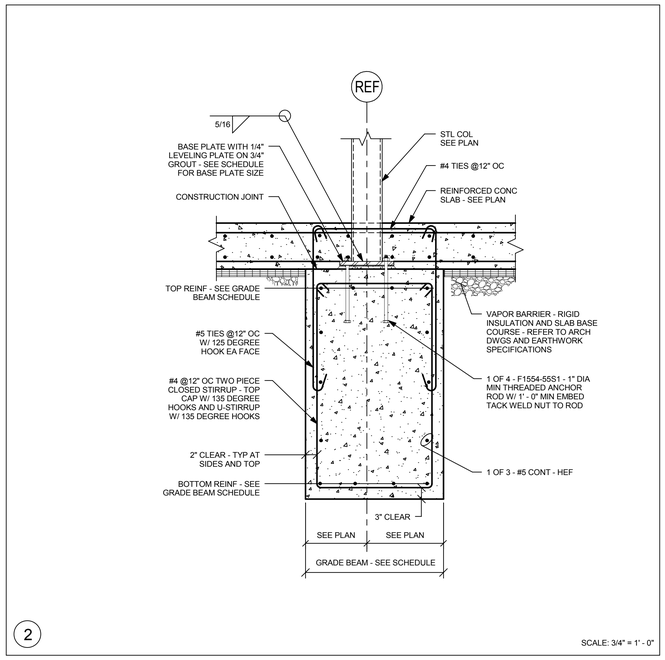

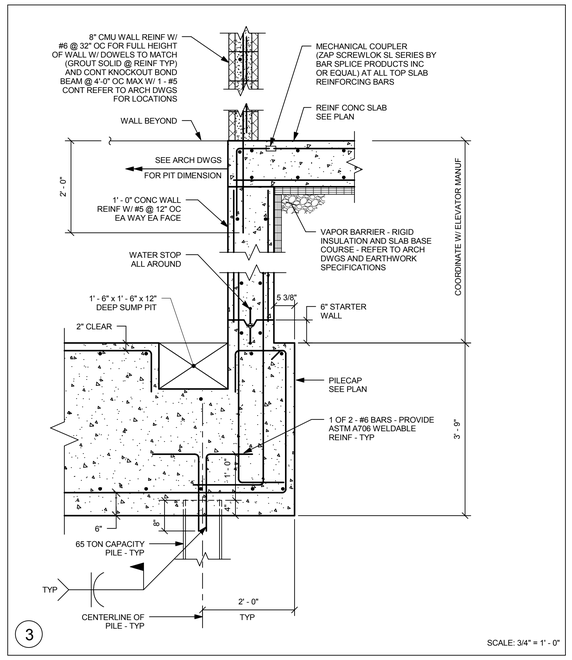

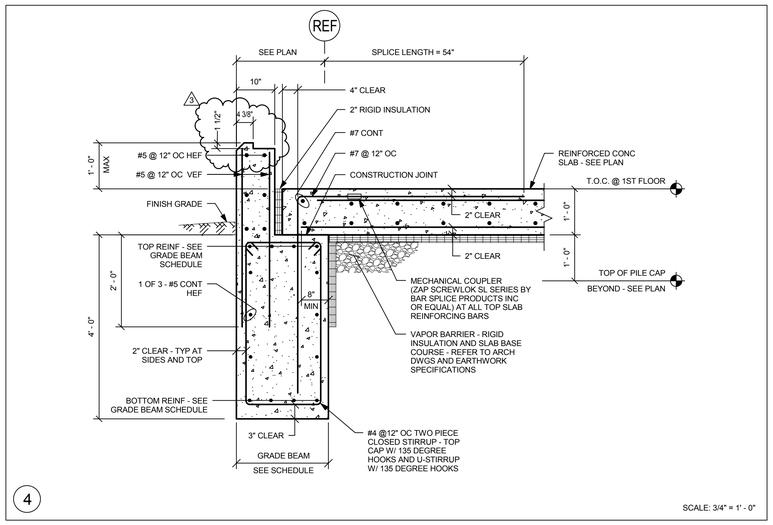

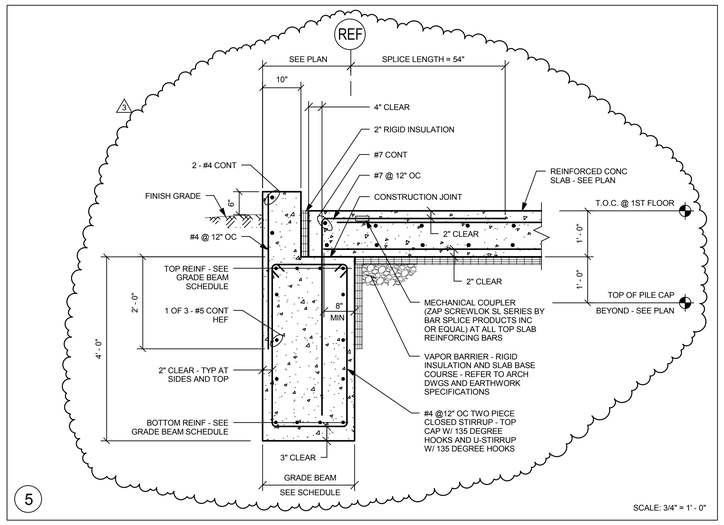

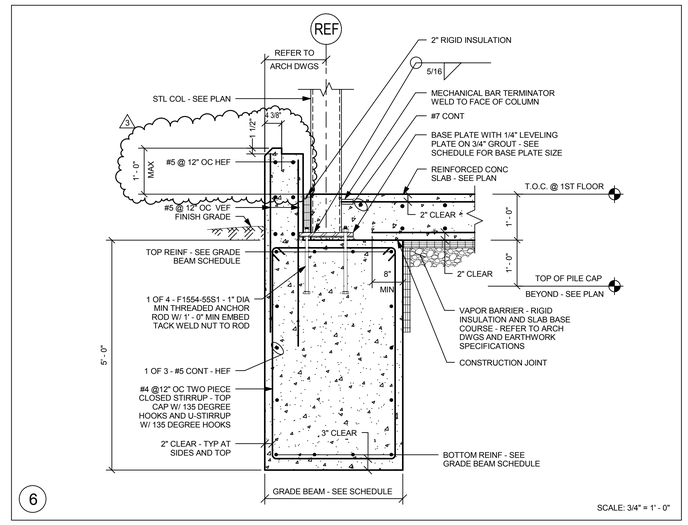

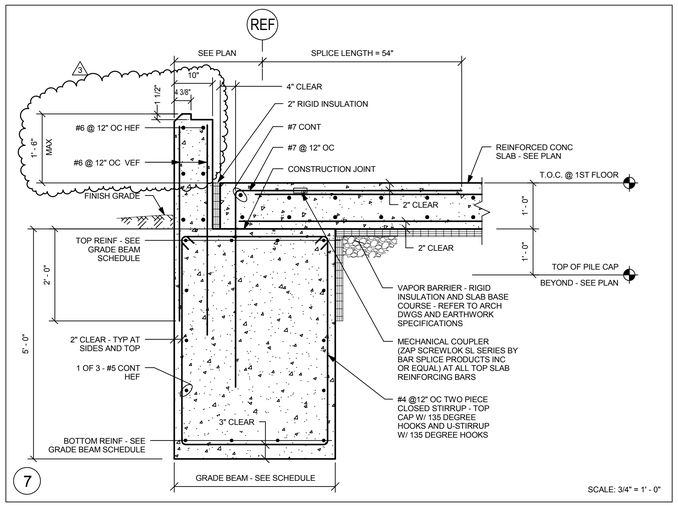

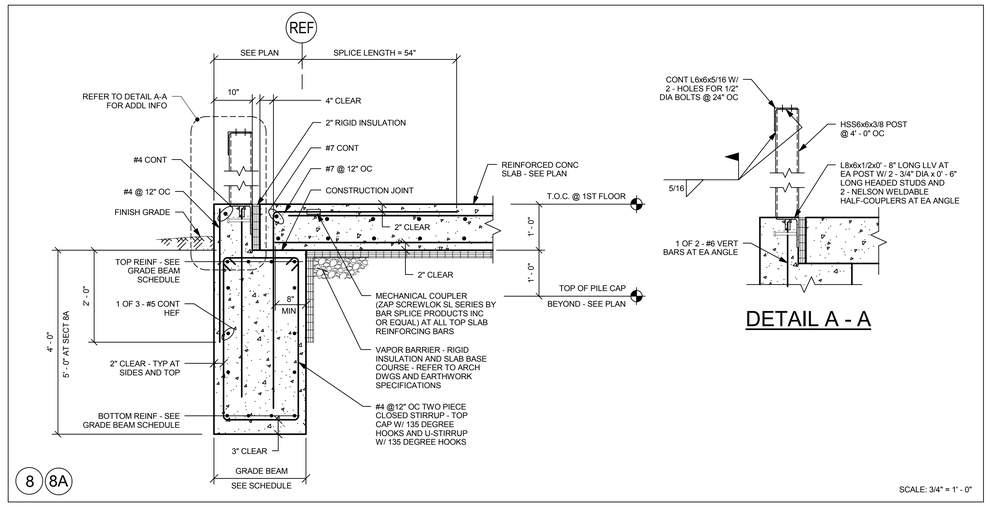

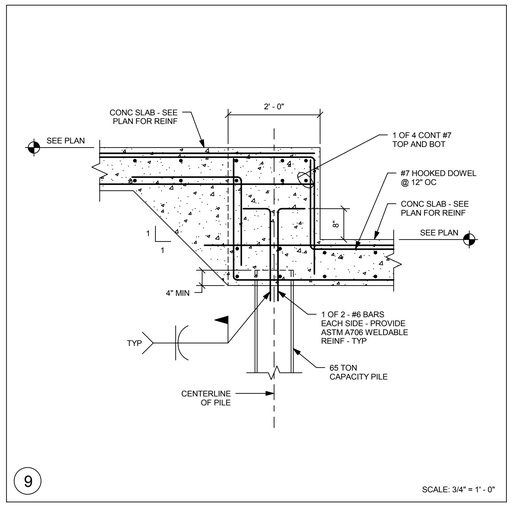

A3 architects
526 Boston Post Rd Wayland, MA
508.358.0790 www.a3architects.com

EDG
Engineers Design Group Inc.
Structural Engineers
350 Main St. 2nd Flr
Malden, Ma 02148
(781)396-9007
(781)396-9008 (FAX)
EDG@EDGINC.COM

Copyright©2016 A3 Architects, LLC

BEVERLY MIDDLE SCHOOL

CABOT STREET
BEVERLY, MA 01915

BID PACKAGE #3
FOUNDATIONS, STRUCTURAL STEEL, & SITEWORK

NORTH ARROW | ADDENDUMIZED DRAWINGS

KEYPLAN

DRAWING NAME:

FOUNDATION SECTIONS

DRAWN BY: DH
REVIEWED BY: CJO
SCALE: 3/4" = 1'-0"
JOB NO: 2014-076
DATE: April 18, 2016
DRAWING NUMER: S2.05

5/20/2016 1:22:24 PM C:\Users\DHarris\Documents\Beverly - 2016_18May2016_105624_dharris.rvt

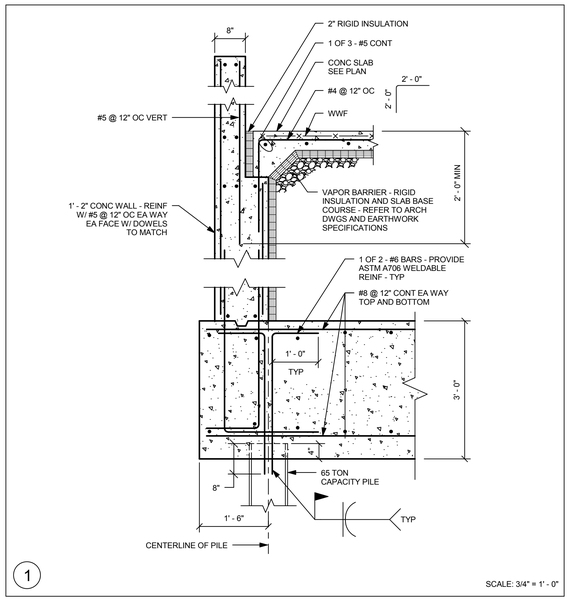

1

SCALE: 3/4" = 1' - 0"

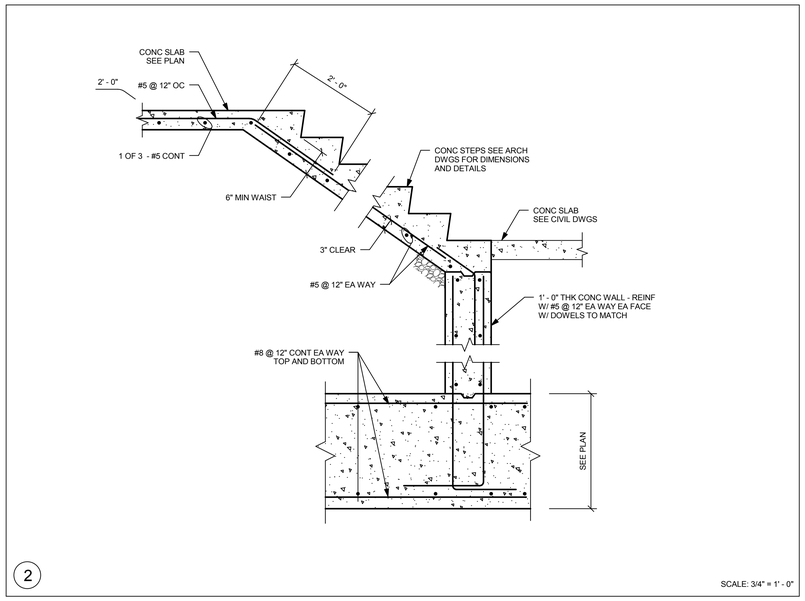

2

SCALE: 3/4" = 1' - 0"

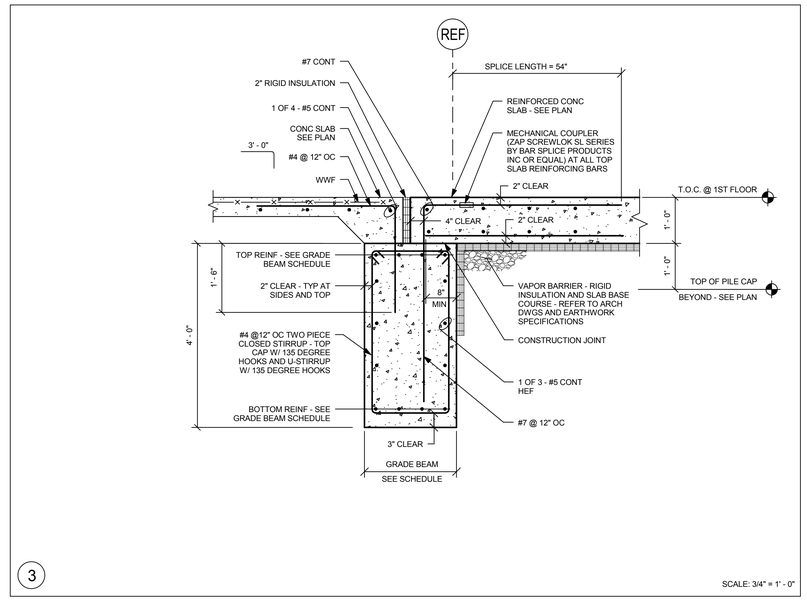

3

SCALE: 3/4" = 1' - 0"

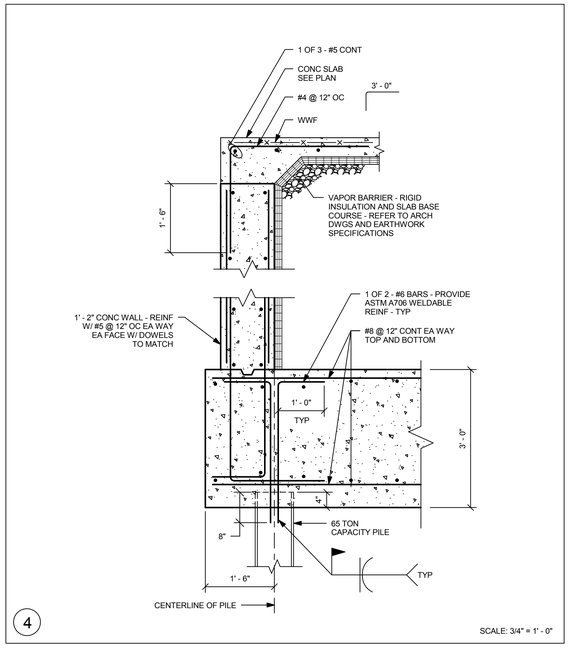

4

SCALE: 3/4" = 1' - 0"

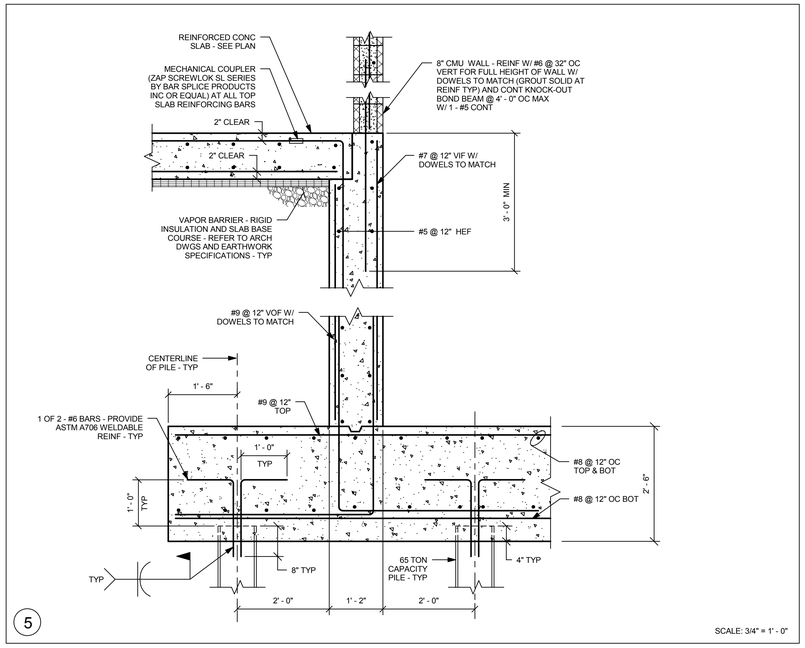

5

SCALE: 3/4" = 1' - 0"

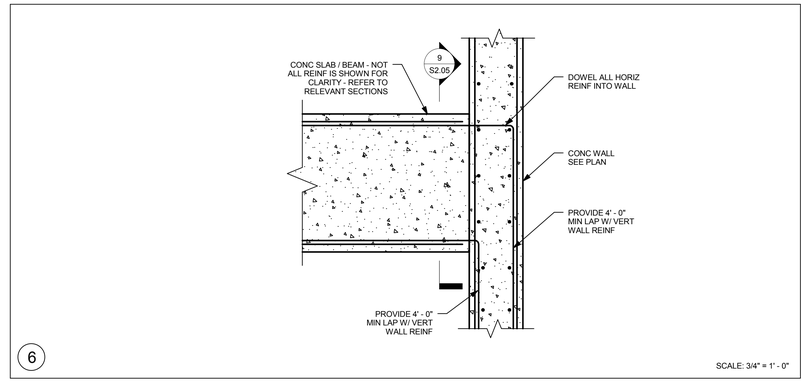

6

SCALE: 3/4" = 1' - 0"

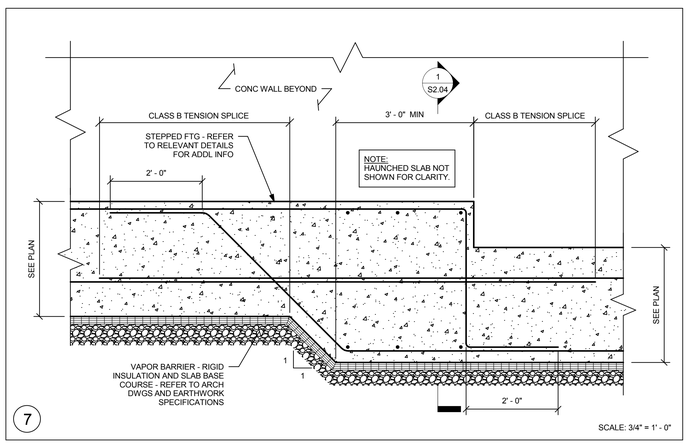

7

SCALE: 3/4" = 1' - 0"

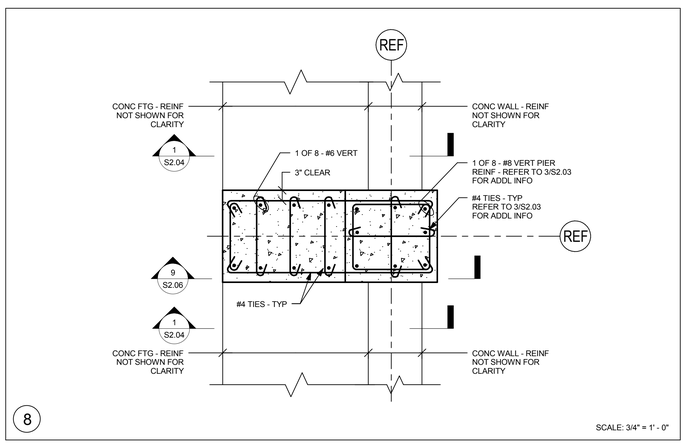

8

SCALE: 3/4" = 1' - 0"

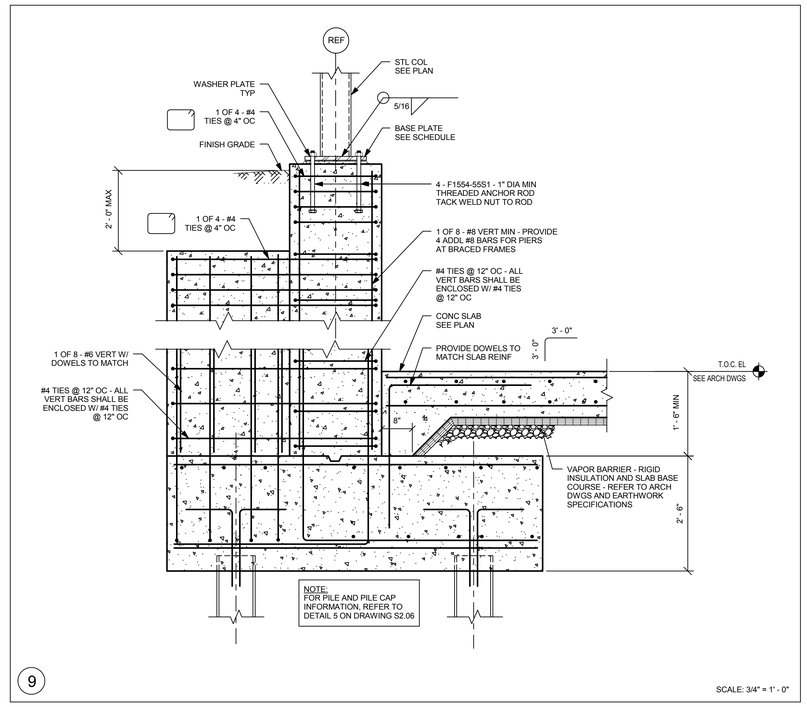

9

SCALE: 3/4" = 1' - 0"

ai3 architects
526 Boston Post Rd Wayland, MA
508.358.0790 www.ai3architects.com

EDG
Engineers Design Group Inc.
Structural Engineers
350 Main St. 2nd Flr
Malden, Ma 02148
(781)396-9007
(781)396-9008 (FAX)
EDG@EDGINC.COM

Copyright©2016 Ai3 Architects, LLC

BEVERLY MIDDLE SCHOOL

CABOT STREET
BEVERLY, MA 01915

BID PACKAGE #3
FOUNDATIONS, STRUCTURAL STEEL, & SITEWORK

NORTH ARROW | ADDENDUMIZED DRAWINGS

KEYPLAN

DRAWING NAME:

FOUNDATION SECTIONS

DRAWN BY: DH
REVIEWED BY: CJO
SCALE: 3/4" = 1'-0"
JOB NO: 2014-076
DATE: April 18, 2016
DRAWING NUMER: S2.06

5/20/2016 1:22:27 PM C:\Users\DHarris\Documents\Beverly - 2016_18May2016_105624_dharris.rvt

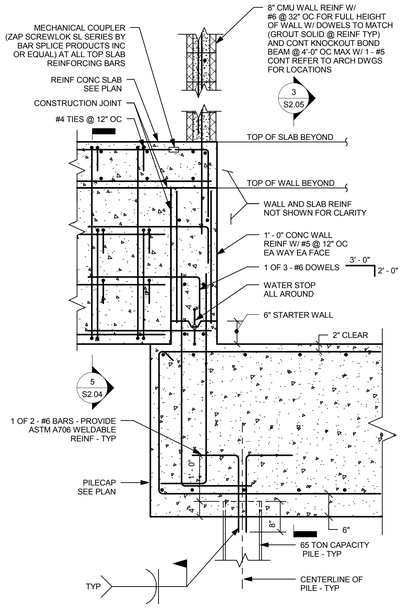

1

SCALE: 3/4" = 1' - 0"

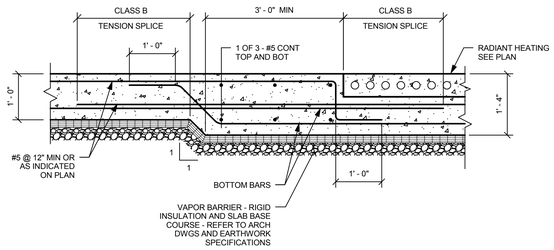

2

SCALE: 3/4" = 1' - 0"

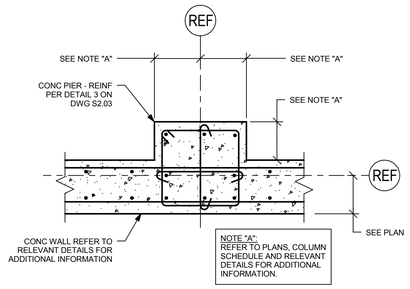

3

SCALE: 3/4" = 1' - 0"

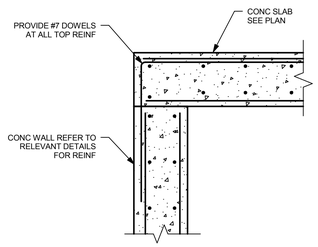

4

SCALE: 3/4" = 1' - 0"

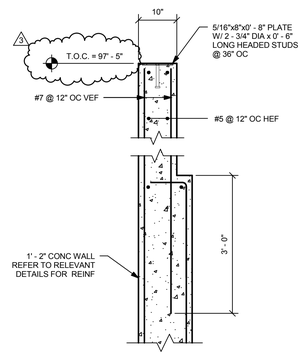

5

SCALE: 3/4" = 1' - 0"

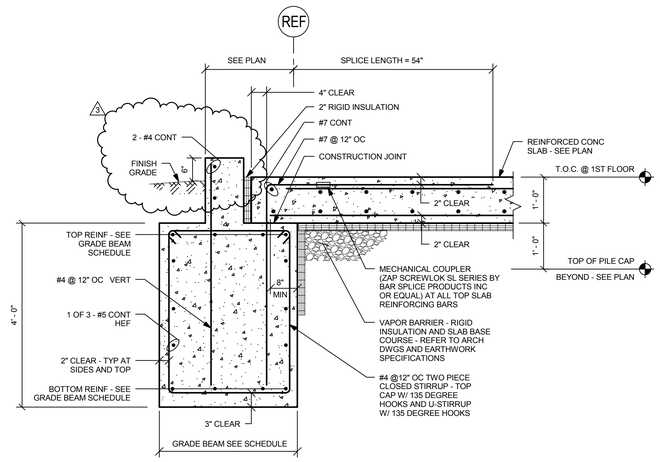

6

SCALE: 3/4" = 1' - 0"

7

SCALE: 3/4" = 1' - 0"

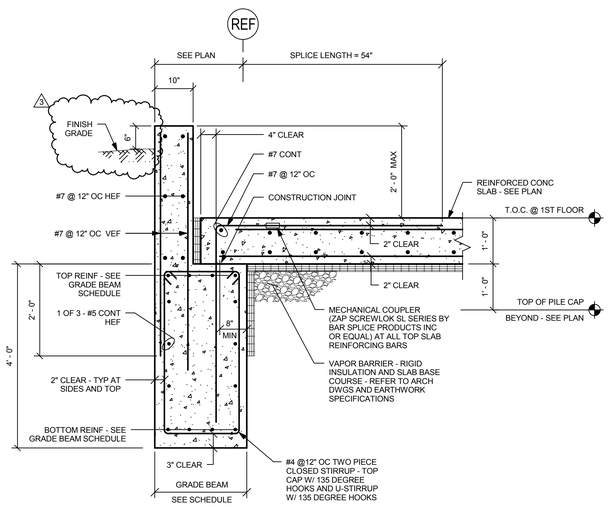

8

SCALE: 3/4" = 1' - 0"

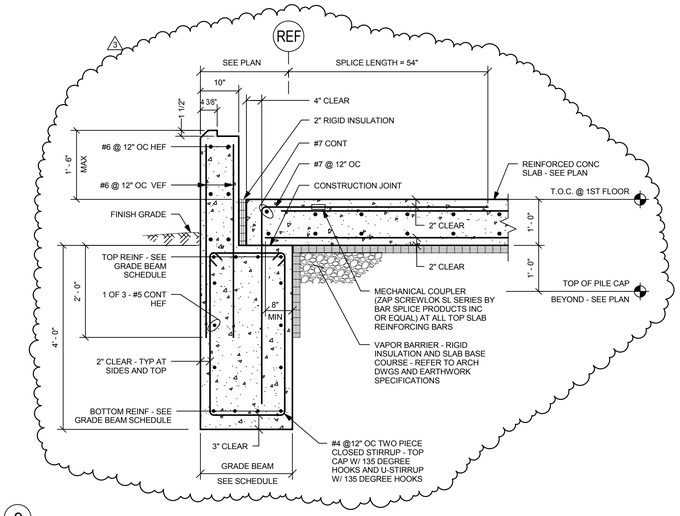

9

SCALE: 3/4" = 1' - 0"

ai3 architects
526 Boston Post Rd Wayland, MA
508.358.0790 www.ai3architects.com

EDG
Engineers Design Group Inc.
Structural Engineers
350 Main St. 2nd Flr
Malden, Ma 02148
(781)396-9007
(781)396-9008 (FAX)
EDG@EDGINC.COM

Copyright©2016 AI3 Architects, LLC

BEVERLY MIDDLE SCHOOL

CABOT STREET
BEVERLY, MA 01915

BID PACKAGE #3
FOUNDATIONS, STRUCTURAL STEEL, & SITEWORK

NORTH ARROW | ADDENDUMIZED DRAWINGS

KEYPLAN

DRAWING NAME:

FOUNDATION SECTIONS

DRAWN BY: DH
REVIEWED BY: CJO
SCALE: 3/4" = 1'-0"
JOB NO: 2014-076
DATE: April 18, 2016
DRAWING NUMER: S2.07

5/20/2016 1:22:29 PM C:\Users\DHarris\Documents\Beverly - 2016_18May2016_105624_dharris.rvt

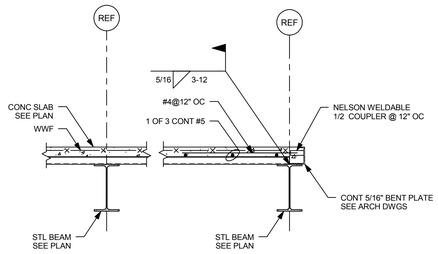

1

SCALE: 3/4" = 1' - 0"

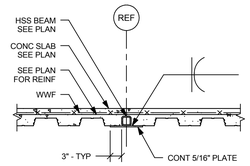

2

SCALE: 3/4" = 1' - 0"

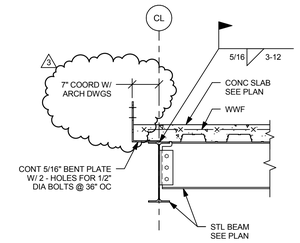

3

SCALE: 3/4" = 1' - 0"

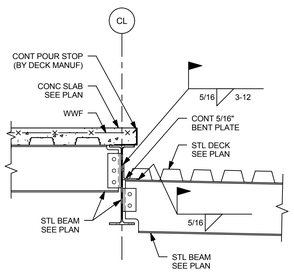

4

SCALE: 3/4" = 1' - 0"

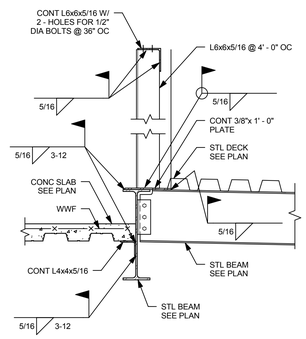

5

SCALE: 3/4" = 1' - 0"

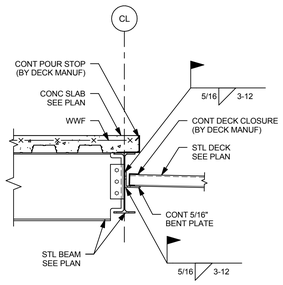

6

SCALE: 3/4" = 1' - 0"

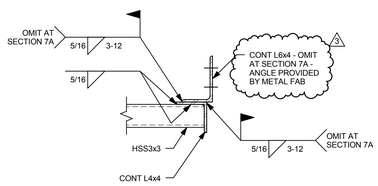

DETAIL A - A

NO SCALE

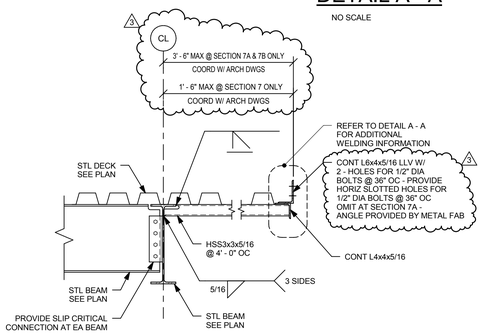

7 7A

SCALE: 3/4" = 1' - 0"

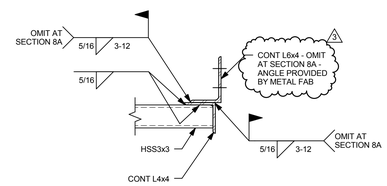

DETAIL A - A

NO SCALE

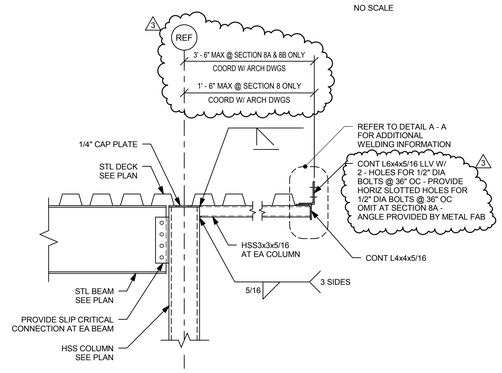

8 8A

SCALE: 3/4" = 1' - 0"

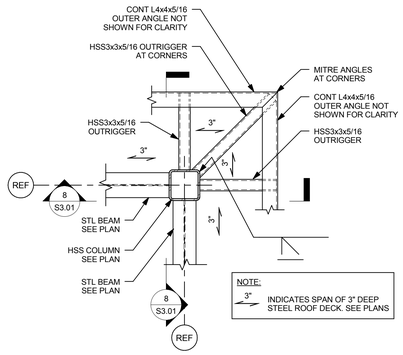

9

SCALE: 3/4" = 1' - 0"

A13 architects
526 Boston Post Rd Wayland, MA
508.358.0790 www.ai3architects.com

EDG
Engineers Design Group Inc.
Structural Engineers
350 Main St. 2nd Flr
Malden, Ma 02148
(781)396-9007
(781)396-9008 (FAX)
EDG@EDGINC.COM

Copyright©2016 A13 Architects, LLC

BEVERLY MIDDLE SCHOOL

CABOT STREET
BEVERLY, MA 01915

BID PACKAGE #3
FOUNDATIONS, STRUCTURAL STEEL, & SITEWORK

NORTH ARROW

ADDENDUMIZED DRAWINGS

KEYPLAN

DRAWING NAME:

STEEL SECTIONS

DRAWN BY: DH

REVIEWED BY: CJO

SCALE: As indicated

JOB NO: 2014-076

DATE: April 18, 2016

DRAWING NUMER: S3.01

5/20/2016 1:22:31 PM C:\Users\DHarris\Documents\Beverly - 2016_18May2016_105624_dharris.rvt

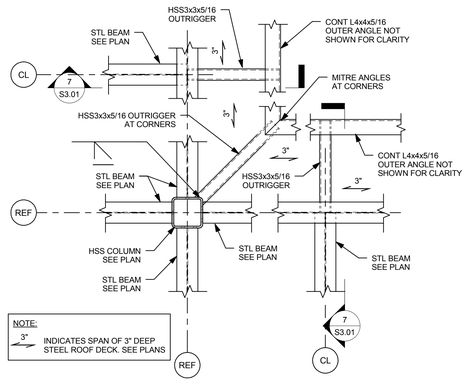

1

SCALE: 3/4" = 1' - 0"

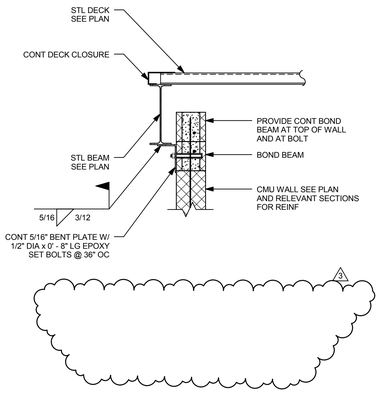

2

SCALE: 3/4" = 1' - 0"

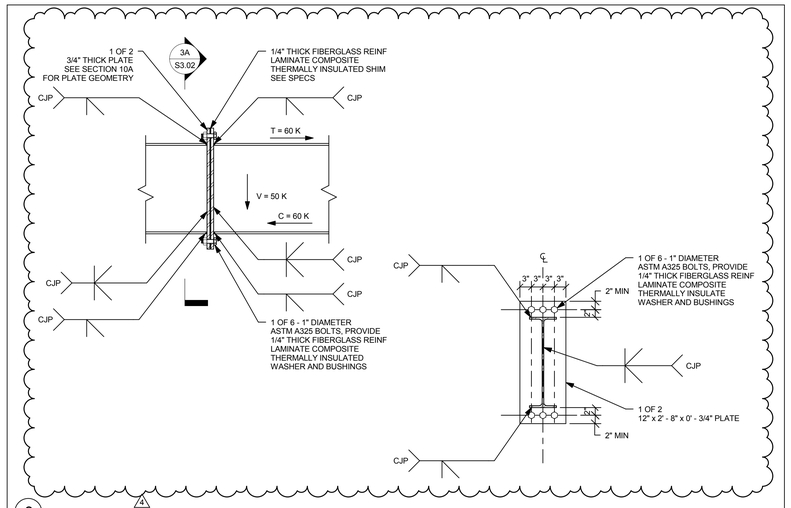

3

SCALE: 3/4" = 1' - 0"

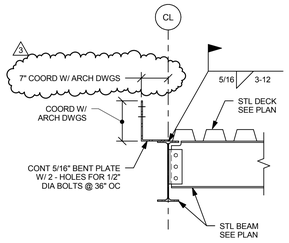

4

SCALE: 3/4" = 1' - 0"

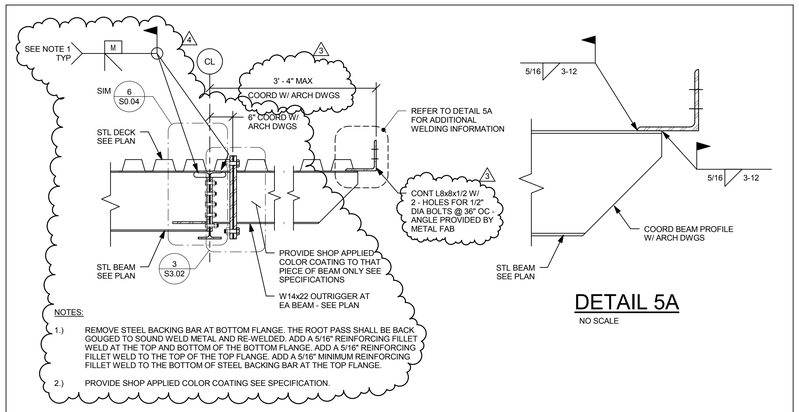

NOTES:

1.) REMOVE STEEL BACKING BAR AT BOTTOM FLANGE. THE ROOT PASS SHALL BE BACK GOUGED TO SOUND WELD METAL AND RE-WELDED. ADD A 5/16" REINFORCING FILLET WELD AT THE TOP AND BOTTOM OF THE BOTTOM FLANGE. ADD A 5/16" REINFORCING FILLET WELD TO THE TOP OF THE TOP FLANGE. ADD A 5/16" MINIMUM REINFORCING FILLET WELD TO THE BOTTOM OF STEEL BACKING BAR AT THE TOP FLANGE.

2.) PROVIDE SHOP APPLIED COLOR COATING SEE SPECIFICATION.

DETAIL 5A

NO SCALE

5

SCALE: 3/4" = 1' - 0"

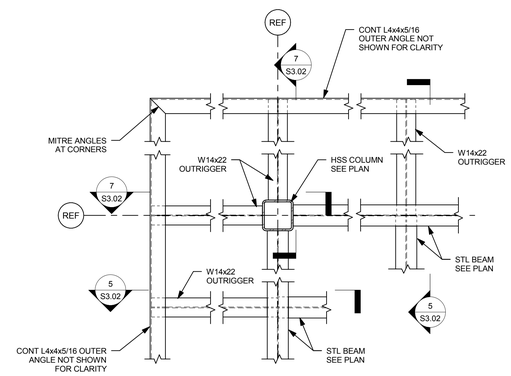

6

SCALE: 3/4" = 1' - 0"

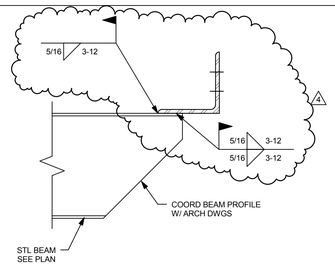

DETAIL 7A

NO SCALE

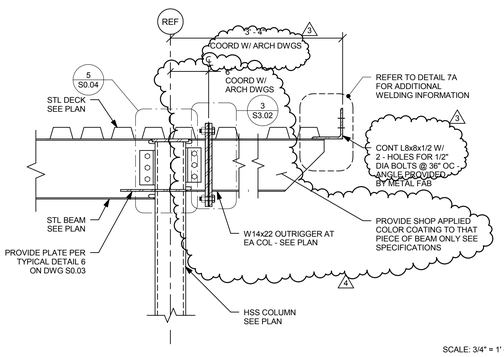

7

SCALE: 3/4" = 1' - 0"

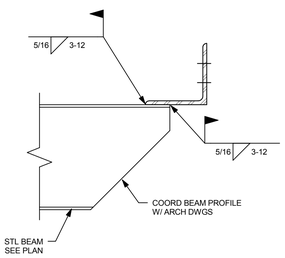

DETAIL 8A

NO SCALE

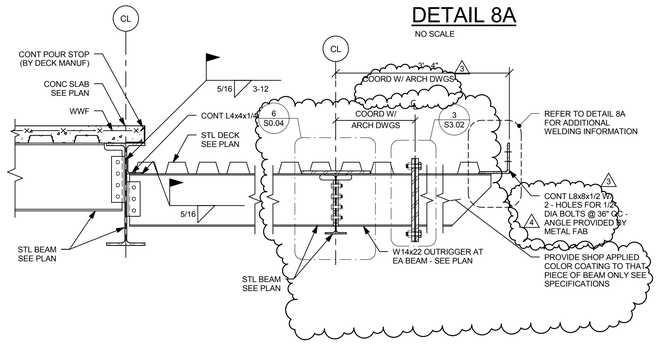

8

SCALE: 3/4" = 1' - 0"

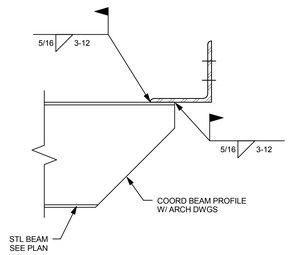

DETAIL 9A

NO SCALE

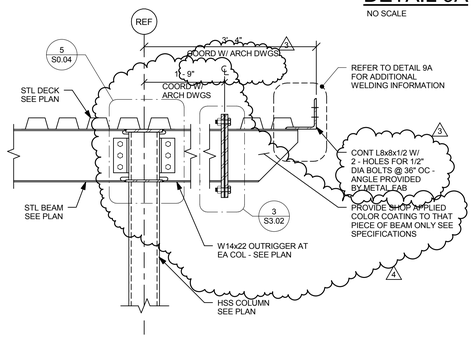

9

SCALE: 3/4" = 1' - 0"

A3 architects
526 Boston Post Rd Wayland, MA
508.358.0790 www.a3architects.com

EDG
Engineers Design Group Inc.
Structural Engineers
350 Main St. 2nd Flr
Malden, Ma 02148
(781)396-9007
(781)396-9008 (FAX)
EDG@EDGINC.COM

Copyright©2016 A3 Architects, LLC

BEVERLY MIDDLE SCHOOL

CABOT STREET
BEVERLY, MA 01915

BID PACKAGE #3
FOUNDATIONS, STRUCTURAL STEEL, & SITEWORK

NORTH ARROW | ADDENDUMIZED DRAWINGS

KEYPLAN

DRAWING NAME:

STEEL SECTIONS

DRAWN BY: DH
REVIEWED BY: CJO
SCALE: As indicated
JOB NO: 2014-076
DATE: April 18, 2016
DRAWING NUMER: S3.02

5/20/2016 1:22:34 PM C:\Users\DHarris\Documents\Beverly - 2016_18May2016_105624_dharris.rvt

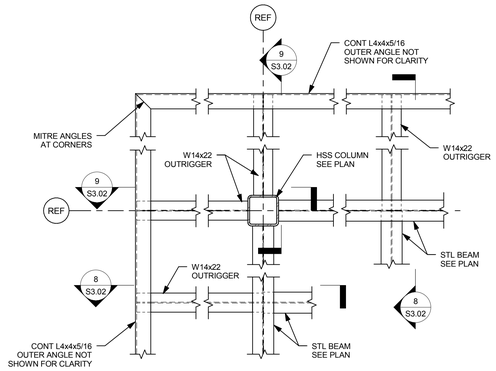

1

SCALE: 3/4" = 1' - 0"

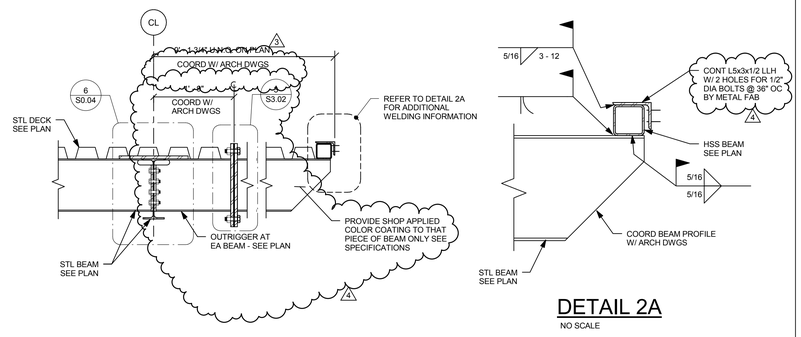

DETAIL 2A

NO SCALE

2 2A

SCALE: 3/4" = 1' - 0"

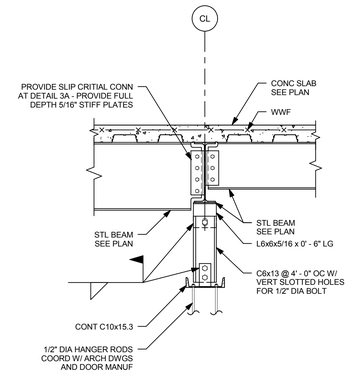

3 3A

SCALE: 3/4" = 1' - 0"

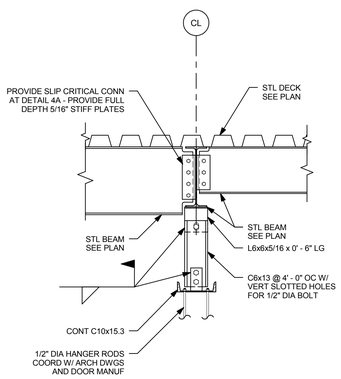

4 4A

SCALE: 3/4" = 1' - 0"

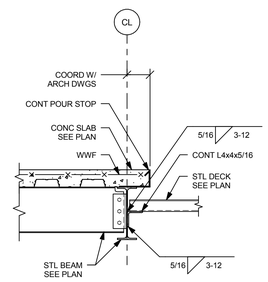

5

SCALE: 3/4" = 1' - 0"

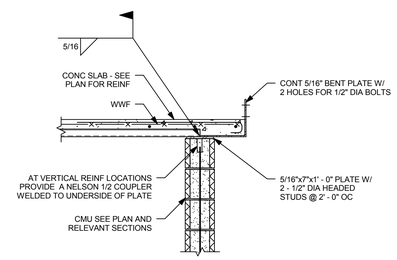

6

SCALE: 3/4" = 1' - 0"

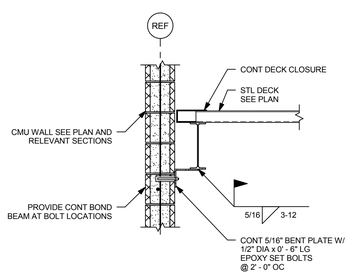

7

SCALE: 3/4" = 1' - 0"

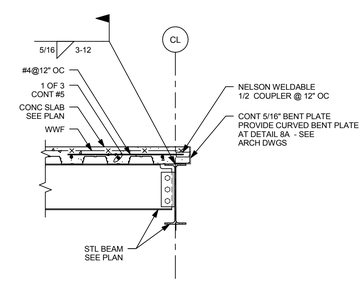

8 8A

SCALE: 3/4" = 1' - 0"

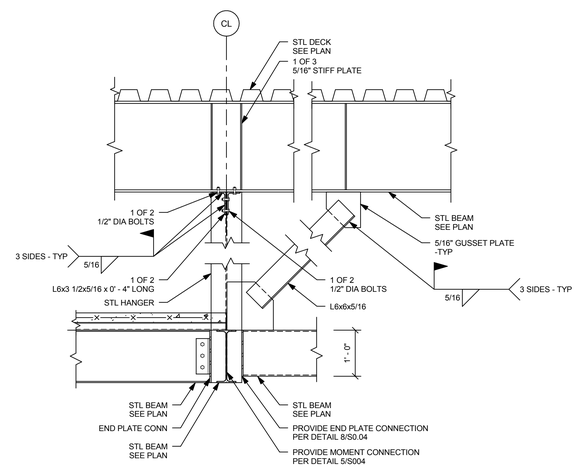

9

SCALE: 3/4" = 1' - 0"

A13 architects
526 Boston Post Rd Wayland, MA
508.358.0790 www.ai3architects.com

EDG
Engineers Design Group Inc.
Structural Engineers
350 Main St. 2nd Flr
Malden, Ma 02148
(781)396-9007
(781)396-9008 (FAX)
EDG@EDGINC.COM

Copyright©2016 A13 Architects, LLC

BEVERLY MIDDLE SCHOOL

CABOT STREET
BEVERLY, MA 01915

BID PACKAGE #3
FOUNDATIONS, STRUCTURAL STEEL, & SITEWORK

NORTH ARROW | ADDENDUMIZED DRAWINGS

KEYPLAN

DRAWING NAME:

STEEL SECTIONS

DRAWN BY: DH
REVIEWED BY: CJO
SCALE: As indicated
JOB NO: 2014-076
DATE: April 18, 2016
DRAWING NUMER: S3.03

5/20/2016 1:22:36 PM C:\Users\DHarris\Documents\Beverly - 2016_18May2016_105624_dharris.rvt

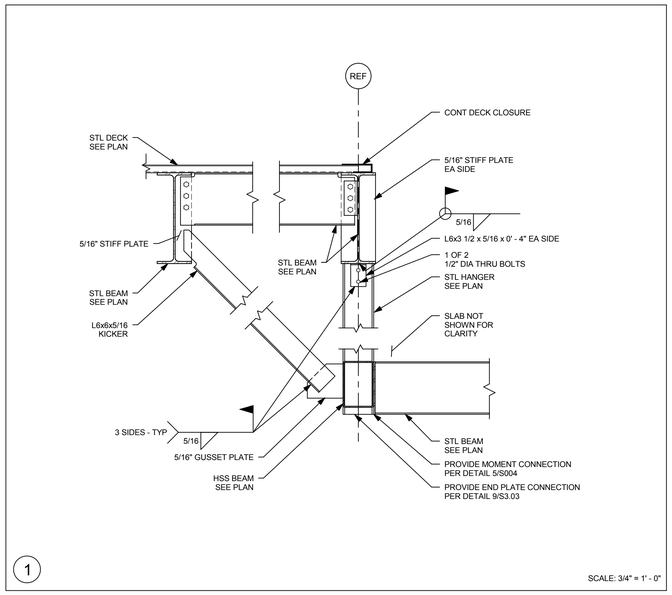

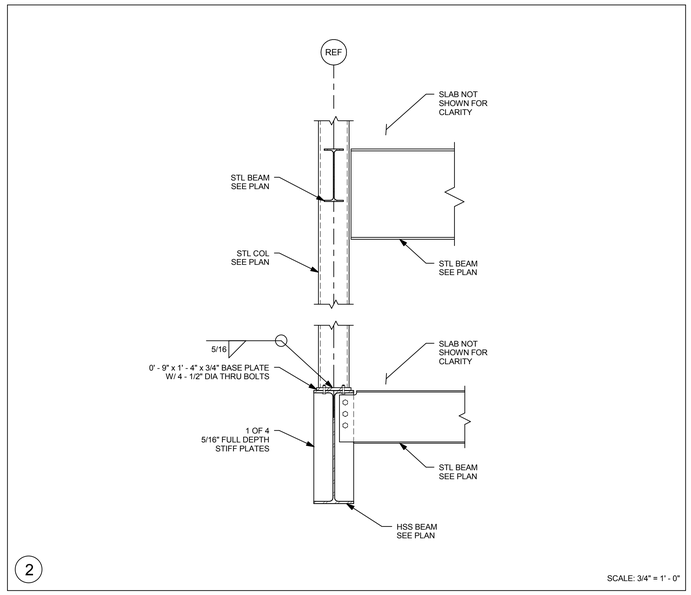

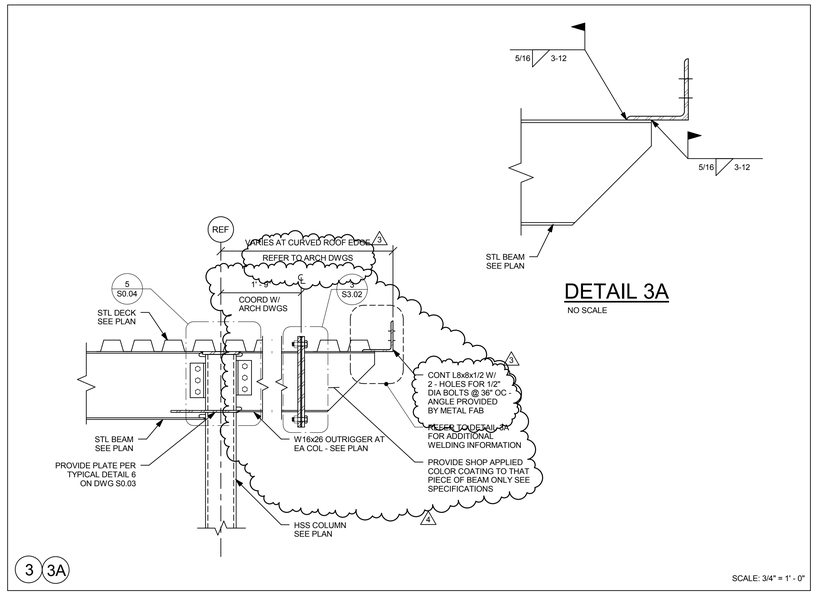

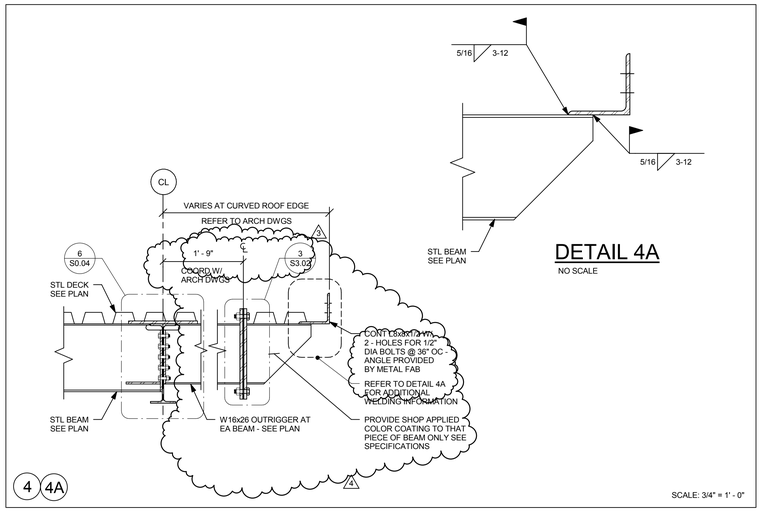

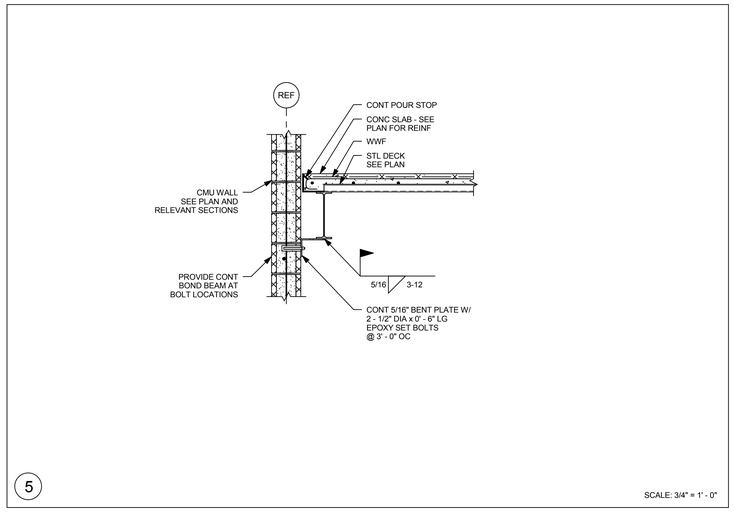

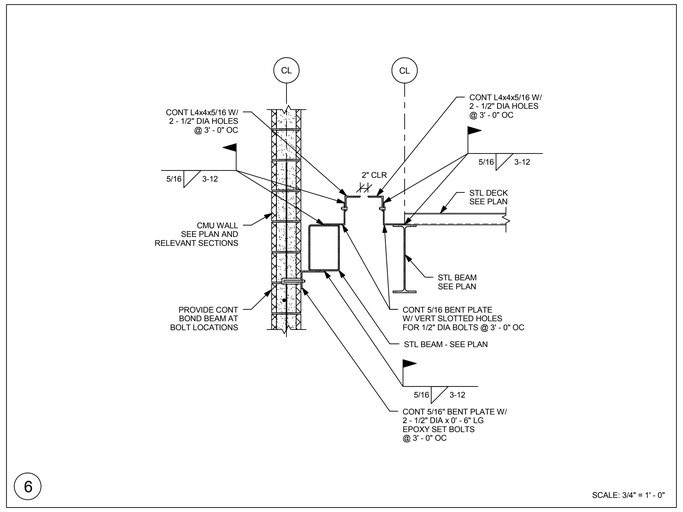

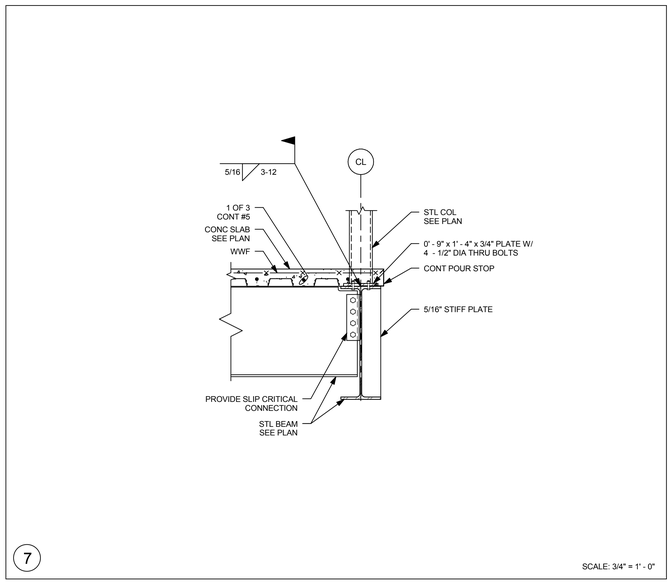

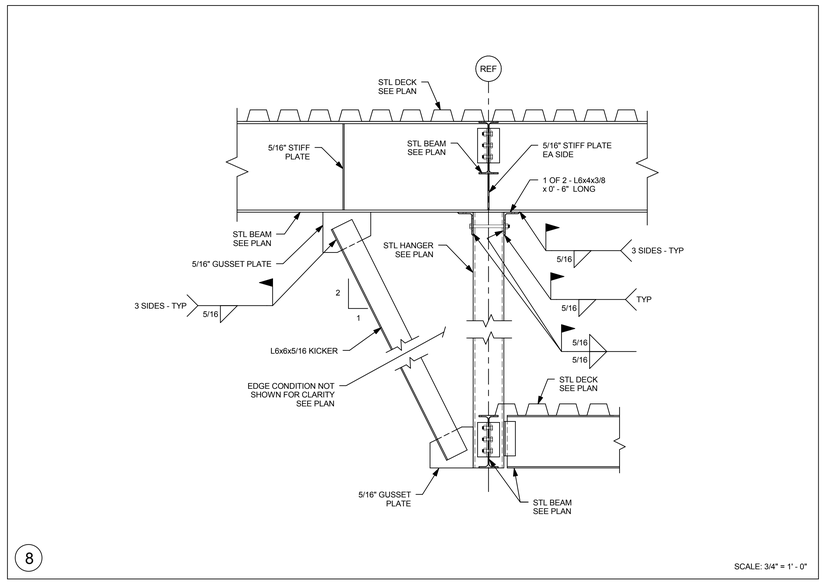

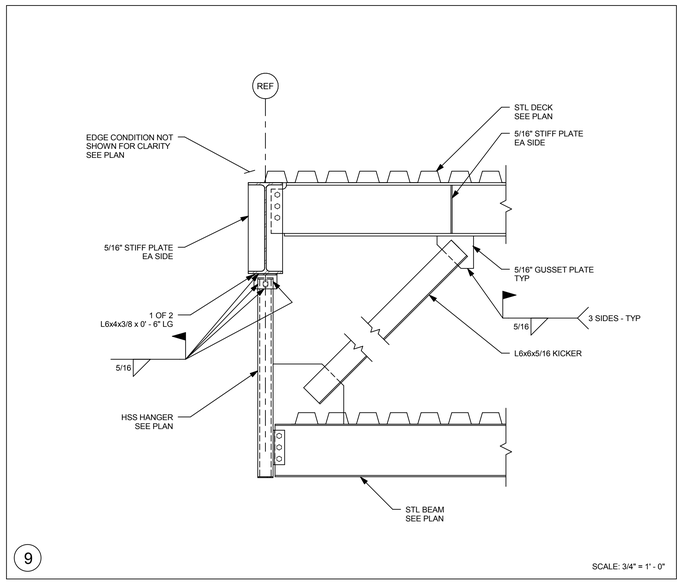

A3 architects
526 Boston Post Rd Wayland, MA
508.358.0790 www.ai3architects.com

EDG
Engineers Design Group Inc.
Structural Engineers
350 Main St. 2nd Flr
Malden, Ma 02148
(781)396-9007
(781)396-9008 (FAX)
EDG@EDGINC.COM

Copyright © 2016 A3 Architects, LLC

BEVERLY MIDDLE SCHOOL

CABOT STREET
BEVERLY, MA 01915

BID PACKAGE #3
FOUNDATIONS, STRUCTURAL STEEL, & SITEWORK

NORTH ARROW | ADDENDUMIZED DRAWINGS

KEYPLAN

DRAWING NAME:

STEEL SECTIONS

DRAWN BY: DH
REVIEWED BY: CJO
SCALE: As indicated
JOB NO: 2014-076
DATE: April 18, 2016
DRAWING NUMER: S3.04

5/20/2016 1:22:39 PM C:\Users\DHarris\Documents\Beverly - 2016_18May2016_105624_dharris.rvt

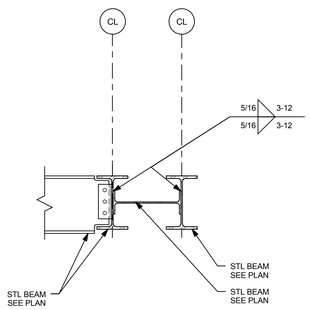

1

SCALE: 3/4" = 1' - 0"

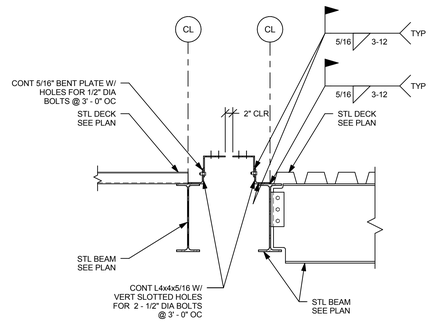

2

SCALE: 3/4" = 1' - 0"

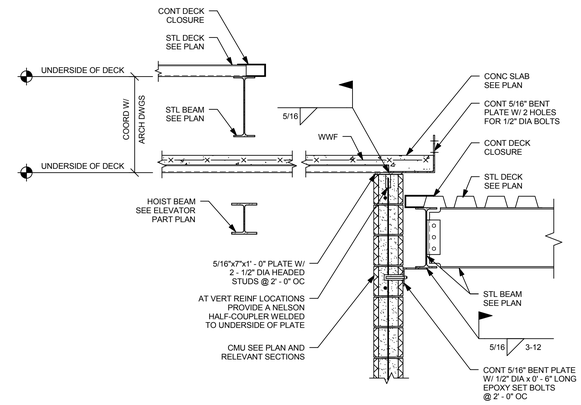

3

SCALE: 3/4" = 1' - 0"

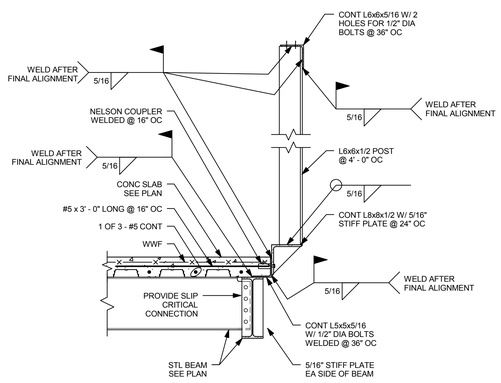

4

SCALE: 3/4" = 1' - 0"

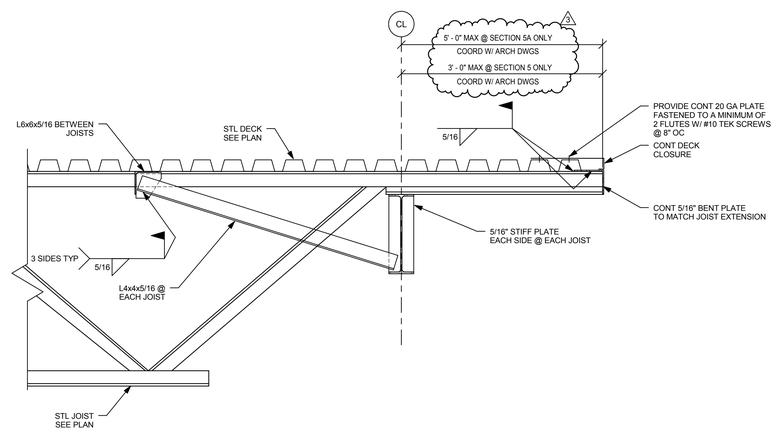

5 5A

SCALE: 3/4" = 1' - 0"

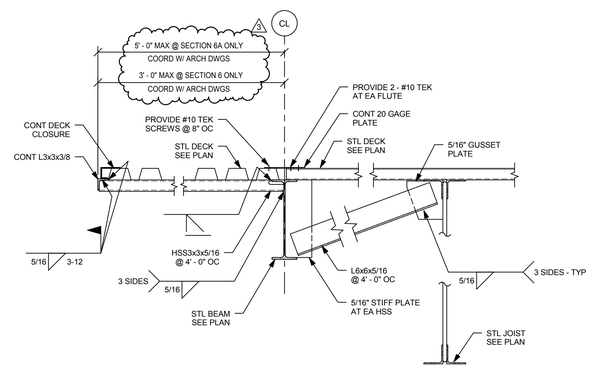

6 6A

SCALE: 3/4" = 1' - 0"

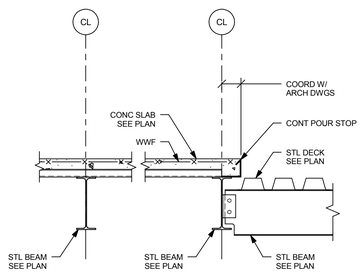

7

SCALE: 3/4" = 1' - 0"

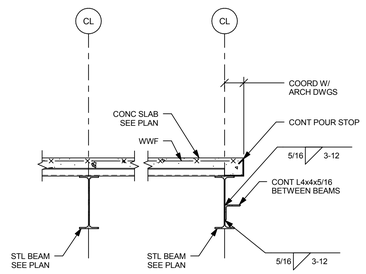

8

SCALE: 3/4" = 1' - 0"

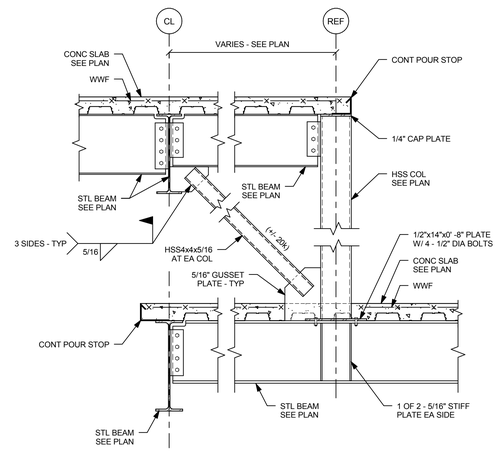

9

SCALE: 3/4" = 1' - 0"

526 Boston Post Rd Wayland, MA
508.358.0790 www.ai3architects.com

Engineers Design Group Inc.
Structural Engineers
350 Main St. 2nd Flr
Malden, Ma 02148
(781)396-9007
(781)396-9008 (FAX)
EDG@EDGINC.COM

Copyright©2016 A3 Architects, LLC

BEVERLY MIDDLE SCHOOL

CABOT STREET
BEVERLY, MA 01915

BID PACKAGE #3
FOUNDATIONS, STRUCTURAL STEEL, & SITEWORK

NORTH ARROW

ADDENDUMIZED DRAWINGS

KEYPLAN

DRAWING NAME:

STEEL SECTIONS

DRAWN BY: DH

REVIEWED BY: CJO

SCALE: As indicated

JOB NO: 2014-076

DATE: April 18, 2016

DRAWING NUMER: S3.05

5/20/2016 1:22:41 PM C:\Users\DHarris\Documents\Beverly - 2016_18May2016_105624_dharris.rvt

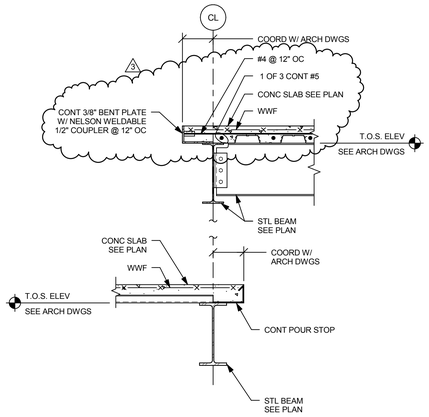

1

SCALE: 3/4" = 1' - 0"

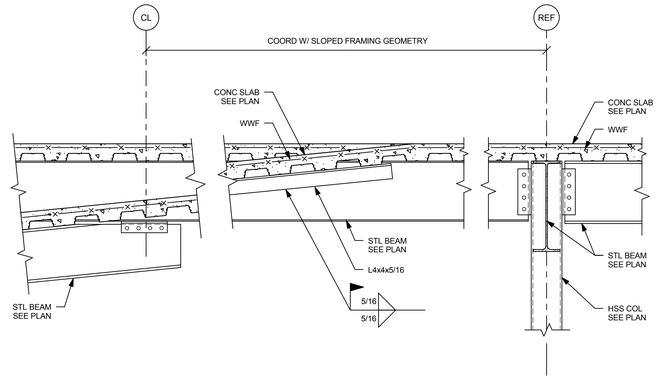

2

SCALE: 3/4" = 1' - 0"

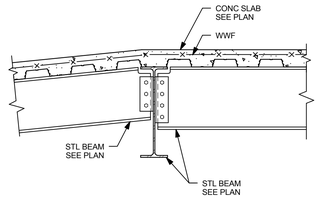

3

SCALE: 3/4" = 1' - 0"

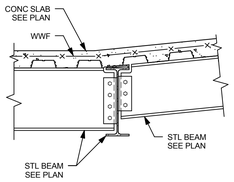

4

SCALE: 3/4" = 1' - 0"

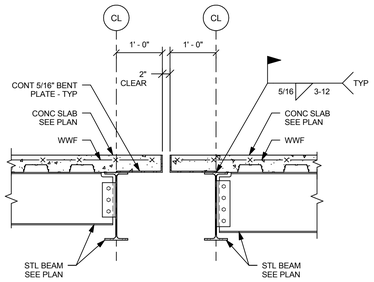

5

SCALE: 3/4" = 1' - 0"

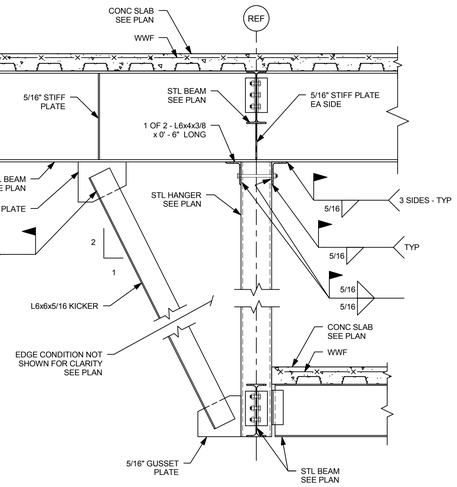

6

SCALE: 3/4" = 1' - 0"

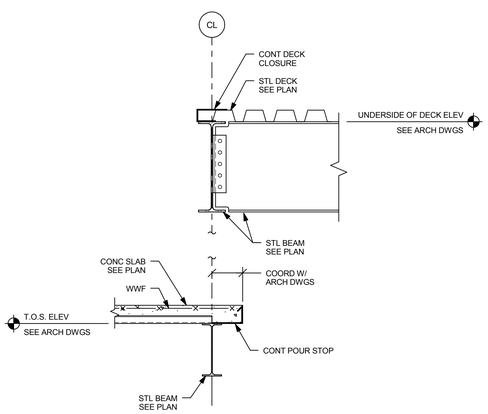

7

SCALE: 3/4" = 1' - 0"

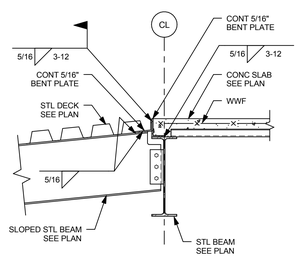

8

SCALE: 3/4" = 1' - 0"

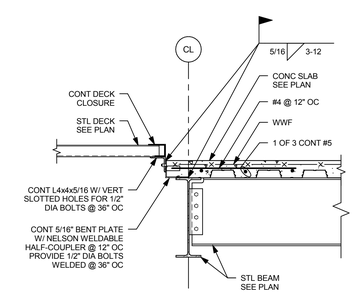

9

SCALE: 3/4" = 1' - 0"

526 Boston Post Rd
Wayland, MA
508.358.0790
www.ai3architects.com

Engineers Design Group Inc.
Structural Engineers
350 Main St. 2nd Flr
Malden, Ma 02148
(781)396-9007
(781)396-9008 (FAX)
EDG@EDGINC.COM

Copyright©2016 AI3 Architects, LLC

BEVERLY MIDDLE SCHOOL

CABOT STREET
BEVERLY, MA 01915

BID PACKAGE #3
FOUNDATIONS, STRUCTURAL STEEL, & SITEWORK

NORTH ARROW

ADDENDUMIZED DRAWINGS

KEYPLAN

DRAWING NAME:

STEEL SECTIONS

DRAWN BY: WER

REVIEWED BY: CJO

SCALE: 3/4" = 1'-0"

JOB NO: 2014-076

DATE: April 18, 2016

DRAWING NUMER: S3.06

5/20/2016 1:22:48 PM C:\Users\DHarris\Documents\Beverly - 2016_18May2016_105624_dharris.rvt

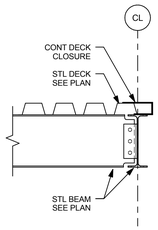

1

SCALE: 3/4" = 1' - 0"

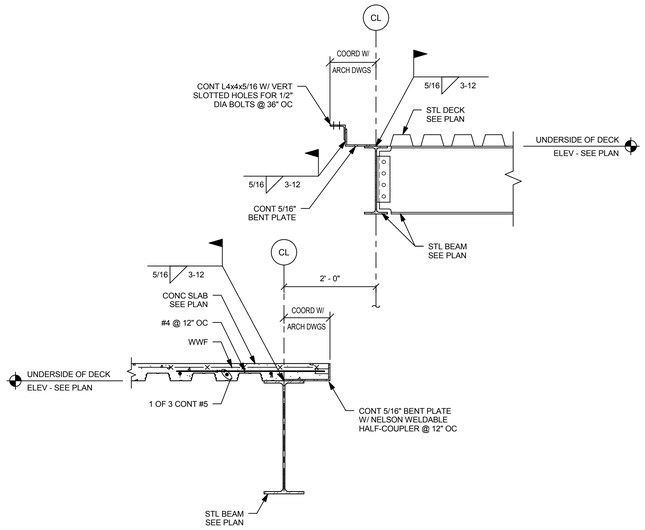

2

SCALE: 3/4" = 1' - 0"

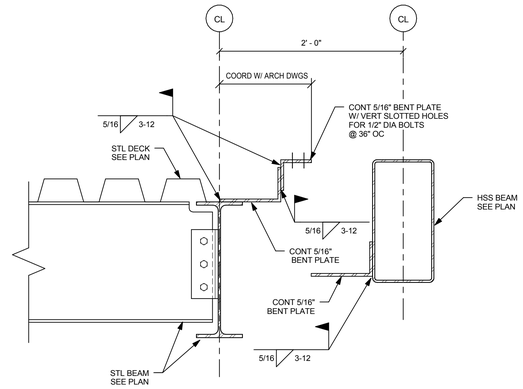

3

SCALE: 1 1/2" = 1' - 0"

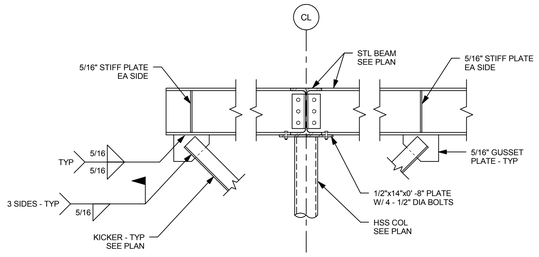

4

SCALE: 3/4" = 1' - 0"

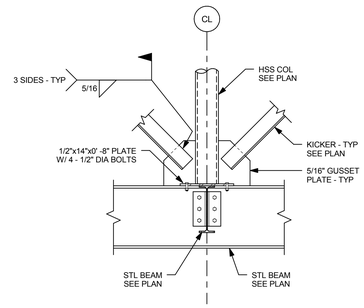

5

SCALE: 3/4" = 1' - 0"

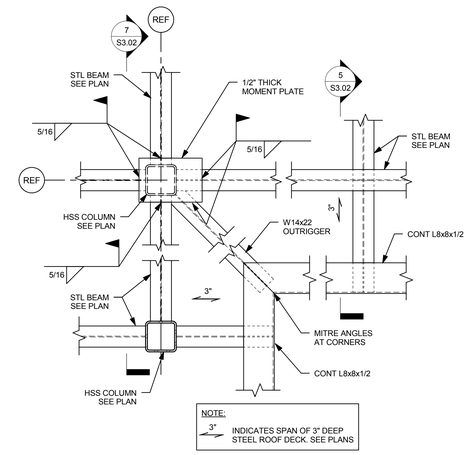

6

SCALE: 3/4" = 1' - 0"

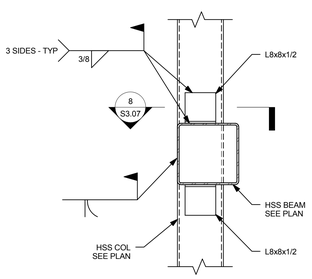

7

SCALE: 3/4" = 1' - 0"

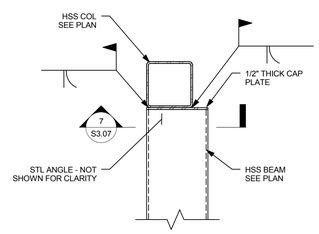

8

SCALE: 3/4" = 1' - 0"

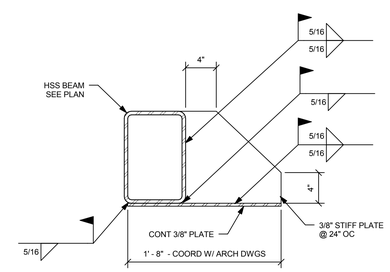

9

SCALE: 1 1/2" = 1' - 0"

A i3 architects
526 Boston Post Rd Wayland, MA
508.358.0790 www.ai3architects.com

EDG
Engineers Design Group Inc.
Structural Engineers
350 Main St. 2nd Flr
Malden, Ma 02148
(781)396-9007
(781)396-9008 (FAX)
EDG@EDGINC.COM

Copyright©2016 A3 Architects, LLC

BEVERLY MIDDLE SCHOOL

CABOT STREET
BEVERLY, MA 01915

BID PACKAGE #3
FOUNDATIONS, STRUCTURAL STEEL, & SITEWORK

NORTH ARROW | ADDENDUMIZED DRAWINGS

KEYPLAN

DRAWING NAME:

STEEL SECTIONS

DRAWN BY: WER
REVIEWED BY: CJO
SCALE: As indicated
JOB NO: 2014-076
DATE: April 18, 2016
DRAWING NUMER: S3.07

5/20/2016 1:22:45 PM C:\Users\DHarris\Documents\Beverly - 2016_18May2016_105624_dharris.rvt

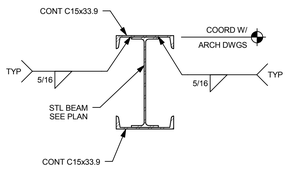

1

SCALE: 3/4" = 1' - 0"

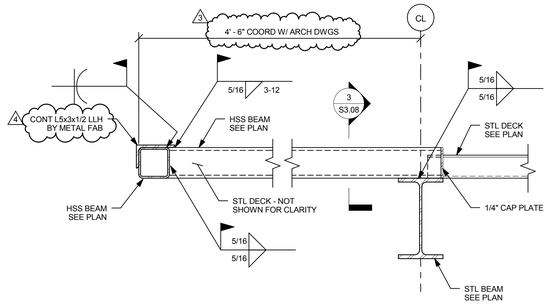

2

SCALE: 1 1/2" = 1' - 0"

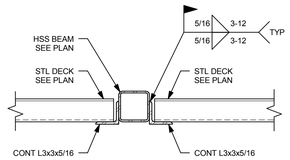

3

SCALE: 1 1/2" = 1' - 0"

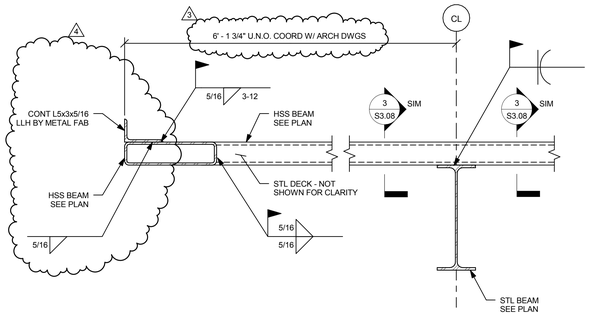

4

SCALE: 3/4" = 1' - 0"

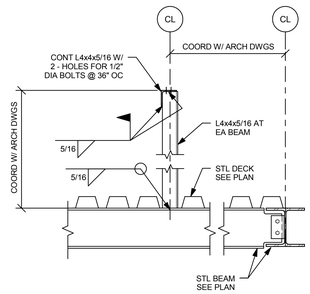

5

SCALE: 3/4" = 1' - 0"

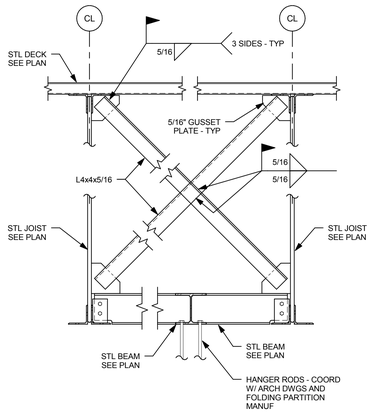

6

SCALE: 3/4" = 1' - 0"

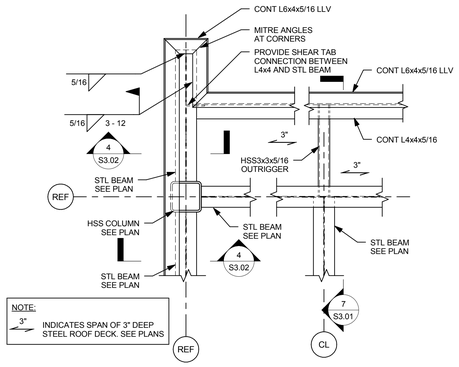

7

SCALE: 3/4" = 1' - 0"

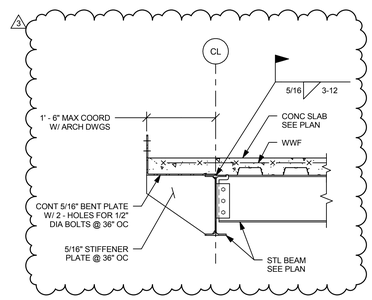

8

SCALE: 3/4" = 1' - 0"

9

SCALE: 3/4" = 1' - 0"

526 Boston Post Rd
508.358.0790
Wayland, MA
www.ai3architects.com

Engineers Design Group Inc.
Structural Engineers
350 Main St. 2nd Flr
Malden, Ma 02148
(781)396-9007
(781)396-9008 (FAX)
EDG@EDGINC.COM

Copyright©2016 Ai3 Architects, LLC

BEVERLY
MIDDLE
SCHOOL

CABOT STREET
BEVERLY, MA 01915

BID PACKAGE #3
FOUNDATIONS,
STRUCTURAL STEEL,
& SITEWORK

NORTH ARROW

ADDENDUMIZED DRAWINGS

KEYPLAN

DRAWING NAME:

STEEL SECTIONS

DRAWN BY: WER

REVIEWED BY: CJO

SCALE: As indicated

JOB NO: 2014-076

DATE: April 18, 2016

DRAWING NUMER:

S3.08

5/20/2016 1:22:47 PM C:\Users\DHarris\Documents\Beverly - 2016_18May2016_105624_dharris.rvt

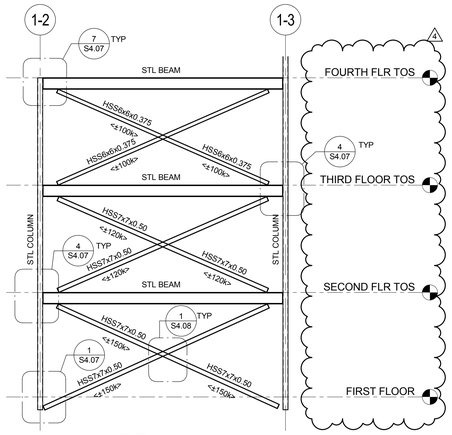

BF-1A
ALONG GRIDLINE 1-B

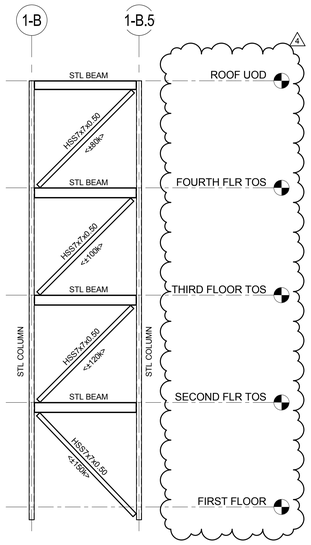

BF-1B
ALONG GRIDLINE 1-3

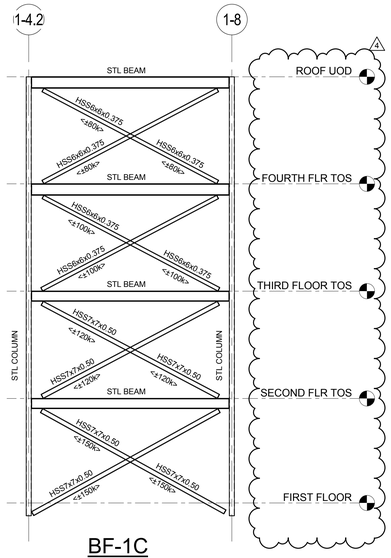

BF-1C
ALONG GRIDLINE 1-C

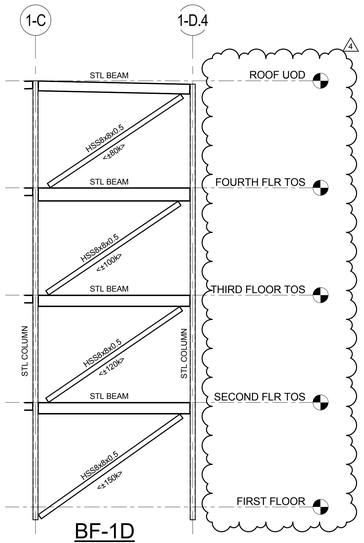

BF-1D
ALONG GRIDLINE 1-4.2

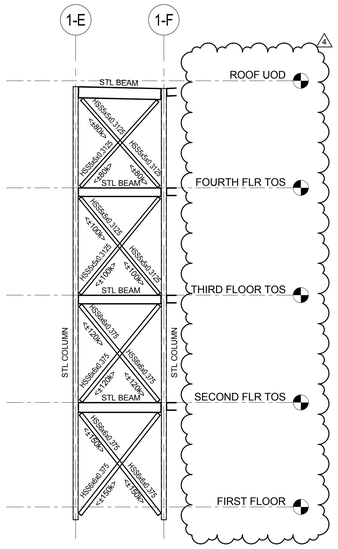

BF-1E
ALONG GRIDLINE 1-2.8

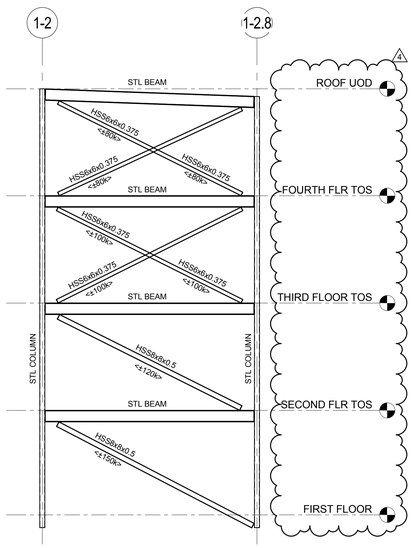

BF-1F
ALONG GRIDLINE 1-F

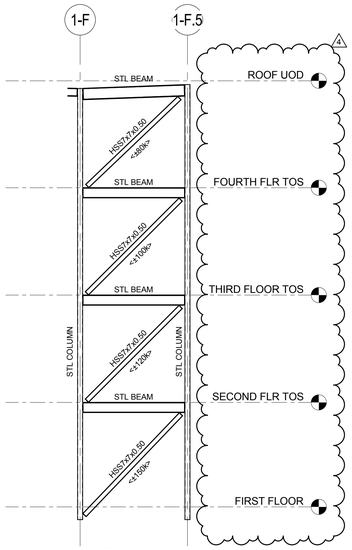

BF-1G
ALONG GRIDLINE 1-2.9

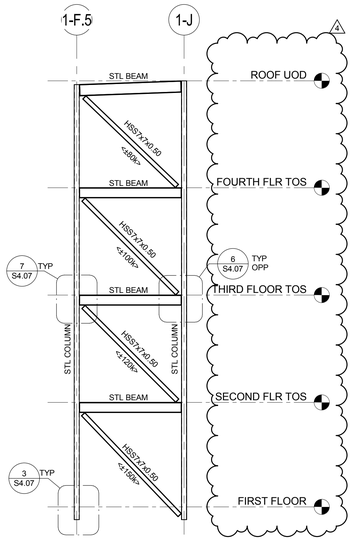

BF-1H
ALONG GRIDLINE 1-4

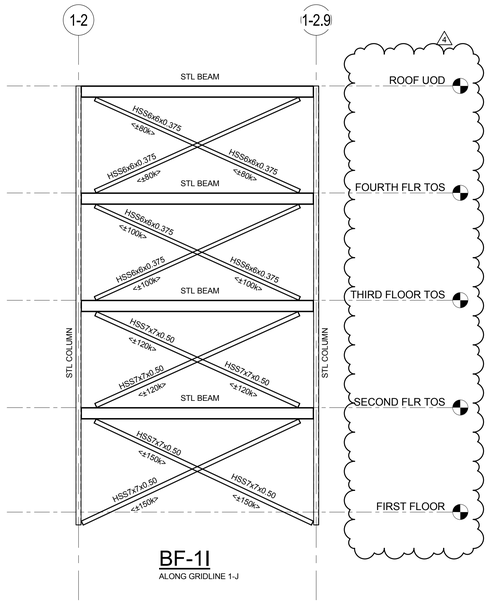

BF-1I
ALONG GRIDLINE 1-J

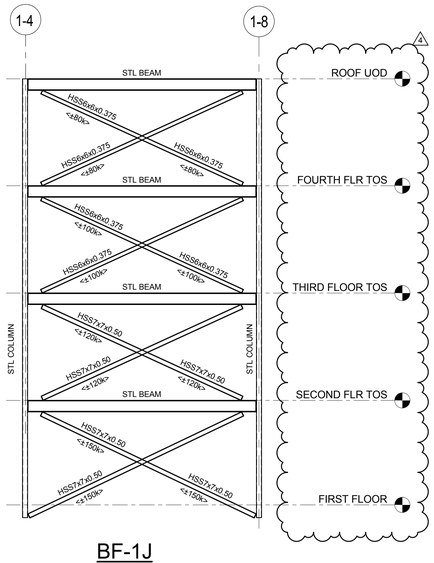

BF-1J
ALONG GRIDLINE 1-J

BRACED FRAMING NOTES:

1.) FABRICATOR IS RESPONSIBLE FOR CONNECTION DESIGN.

2.) ELEVATIONS ARE SCHEMATIC ONLY AND INTENDED TO SHOW CONFIGURATION OF BRACE FRAMES AND BRACE FORCES.

3.) DESIGN DIAGONAL MEMBER CONNECTIONS FOR TWICE THE AXIAL DESIGN FOR FORCE SHOWN (+/- XX k) AT EACH MEMBER (TENSION AND COMPRESSION). AXIAL DESIGN FORCE IS AN LRFD LOAD. USE UNIFORM FORCE METHOD FOR CONNECTION DESIGN.

4.) DO NOT WELD TOP END OF DIAGONAL BRACE MEMBERS IN PLACE UNTIL FLOOR SLABS AND ROOFING ARE IN PLACE. WELDS MUST BE FULLY INSPECTED AND APPROVED PRIOR TO PLACING ANY CONCRETE OR INSTALLING OTHER MATERIALS THAT WOULD COVER THE CONNECTIONS.

5.) BOLTED CONNECTIONS IN BRACE FRAMES SHALL BE DESIGNED AS SLIP CRITICAL CONNECTIONS.

6.) SEE PLANS FOR COLUMN AND BEAM SIZES.

7.) THESE NOTES ARE TYPICAL FOR ALL BRACE FRAME SHEETS UNLESS NOTED OTHERWISE.

8.) * INDICATES ELEMENTS TO BE DESIGNED, FABRICATED AND INSTALLED BY METAL FABRICATIONS.

ai3 architects
526 Boston Post Rd Wayland, MA
508.358.0790 www.ai3architects.com

EDG
Engineers Design Group Inc.
Structural Engineers
350 Main St. 2nd Flr
Malden, Ma 02148
(781)396-9007
(781)396-9008 (FAX)
EDG@EDGINC.COM

BEVERLY MIDDLE SCHOOL

CABOT STREET
BEVERLY, MA 01915

Copyright©2016 AI3 Architects, LLC

BID PACKAGE #3
FOUNDATIONS, STRUCTURAL STEEL, & SITEWORK

NORTH ARROW

ADDENDUMIZED DRAWINGS

KEYPLAN

DRAWING NAME:

BRACE FRAME ELEVATIONS

DRAWN BY: DH

REVIEWED BY: CJO

SCALE: 1/8" = 1'-0"

JOB NO: 2014-076

DATE: April 18, 2016

DRAWING NUMER: S4.01

5/20/2016 1:22:51 PM C:\Users\DHarris\Documents\Beverly - 2016_18May2016_105624_dharris.rvt

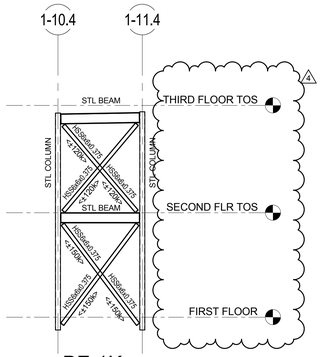

BF-1K
ALONG GRIDLINE 1-J.2

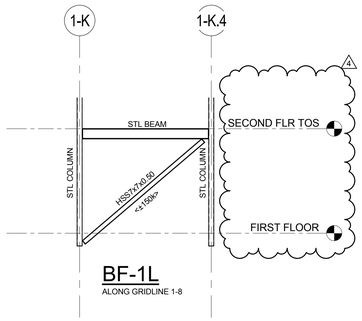

BF-1L
ALONG GRIDLINE 1-8

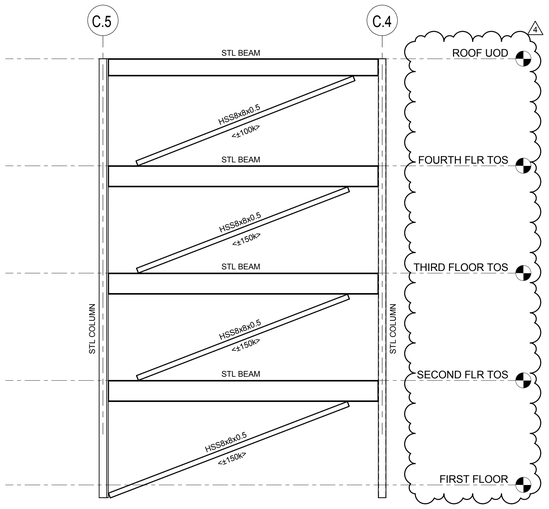

BF-1M
ALONG GRIDLINE 2.9

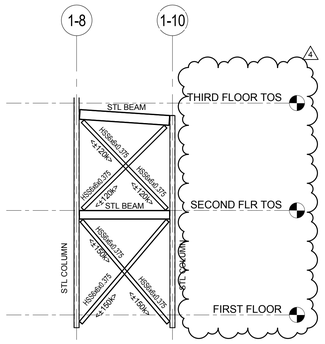

BF-1N
ALONG GRIDLINE 1-K

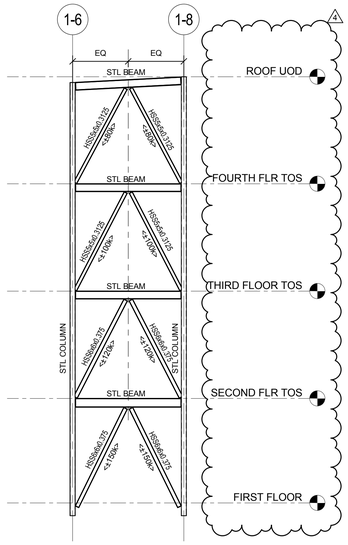

BF-1P
ALONG GRIDLINE 1-L.6

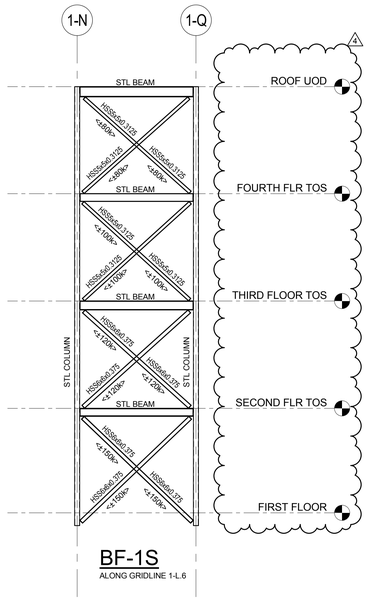

BF-1S
ALONG GRIDLINE 1-L.6

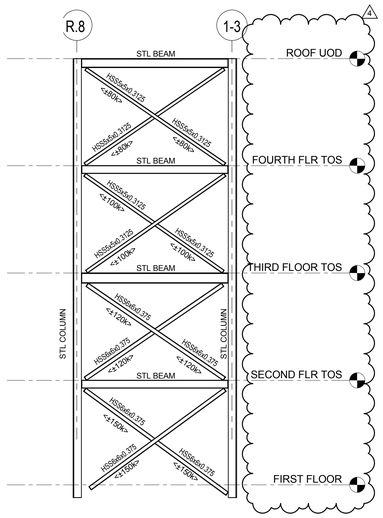

BF-1T
ALONG GRIDLINE 1-P

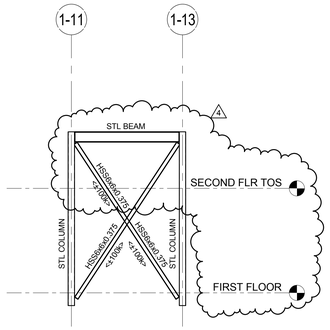

BF-1U
ALONG GRIDLINE 1-Q

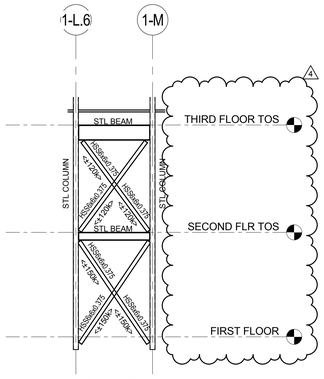

BF-1Q
ALONG GRIDLINE 1-8

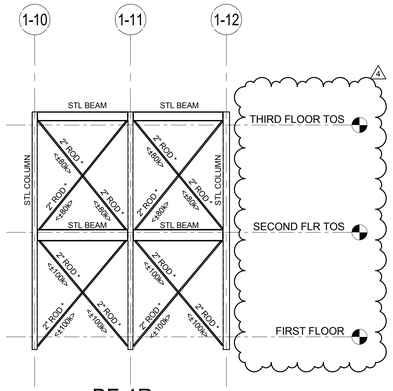

BF-1R
ALONG GRIDLINE 1-M

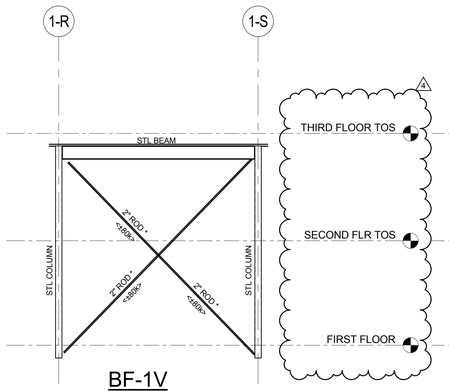

BF-1V
ALONG GRIDLINE 1-5

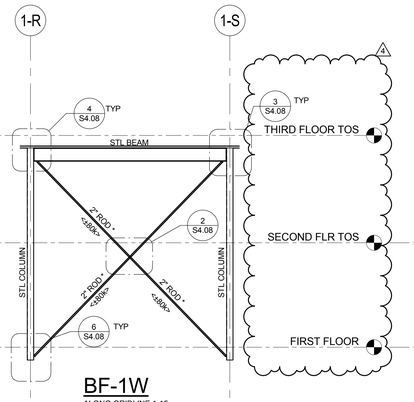

BF-1W
ALONG GRIDLINE 1-15

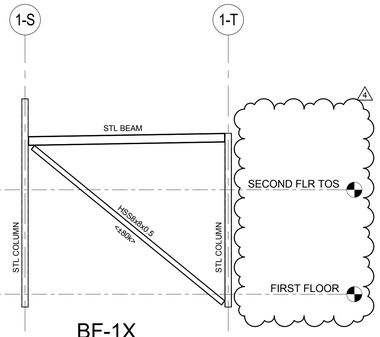

BF-1X
ALONG GRIDLINE 1-8

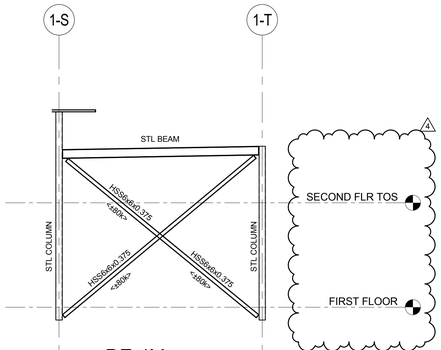

BF-1Y
ALONG GRIDLINE 1-11

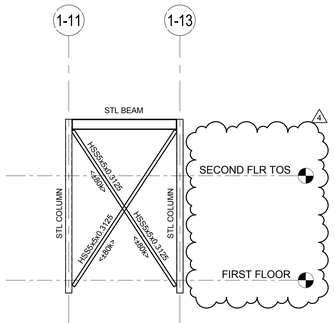

BF-1Z
ALONG GRIDLINE 1-T

ai3 architects
526 Boston Post Rd Wayland, MA
508.358.0790 www.ai3architects.com

EDG
Engineers Design Group Inc.
Structural Engineers
350 Main St. 2nd Flr
Malden, Ma 02148
(781)396-9007
(781)396-9008 (FAX)
EDG@EDGINC.COM

Copyright©2016 AI3 Architects, LLC

BEVERLY MIDDLE SCHOOL

CABOT STREET
BEVERLY, MA 01915

BID PACKAGE #3
FOUNDATIONS, STRUCTURAL STEEL, & SITEWORK

NORTH ARROW | ADDENDUMIZED DRAWINGS

KEYPLAN

DRAWING NAME:

BRACE FRAME ELEVATIONS

DRAWN BY: DH
REVIEWED BY: CJO
SCALE: 1/8" = 1'-0"
JOB NO: 2014-076
DATE: April 18, 2016
DRAWING NUMER: S4.02

5/20/2016 1:22:55 PM C:\Users\DHarris\Documents\Beverly - 2016_18May2016_105624_dharris.rvt

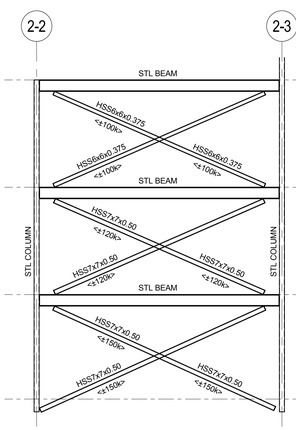

BF-2A
ALONG GRIDLINE 2-B

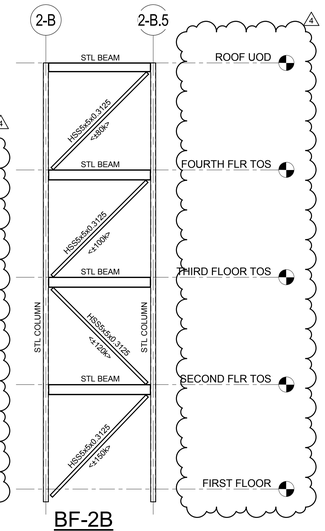

BF-2B
ALONG GRIDLINE 2-3.1

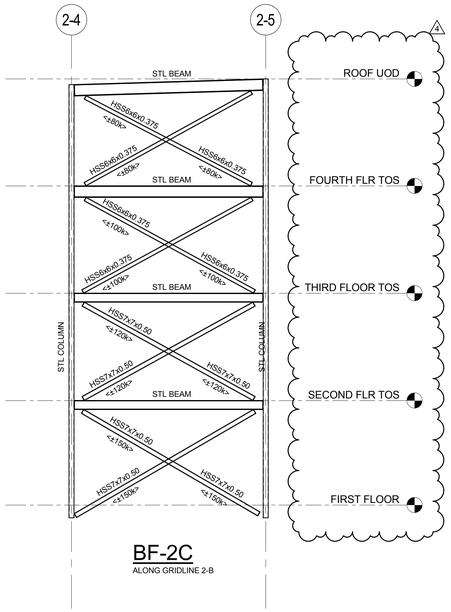

BF-2C
ALONG GRIDLINE 2-B

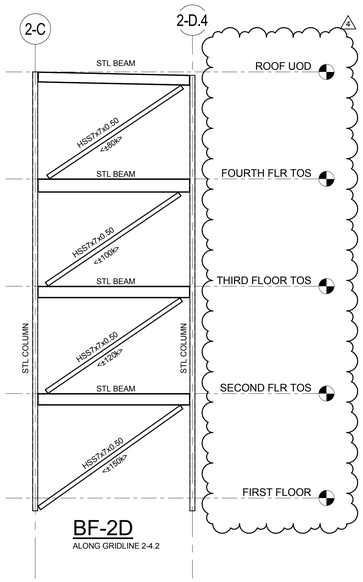

BF-2D
ALONG GRIDLINE 2-4.2

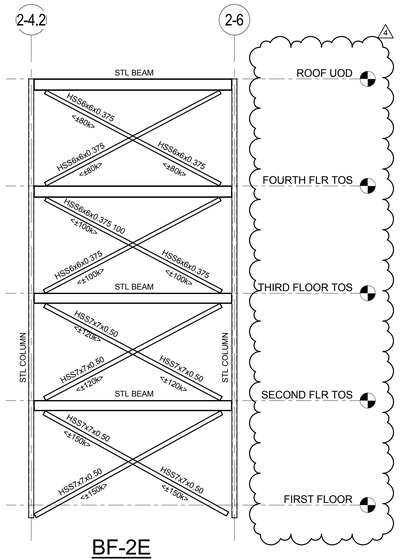

BF-2E
ALONG GRIDLINE 2-C

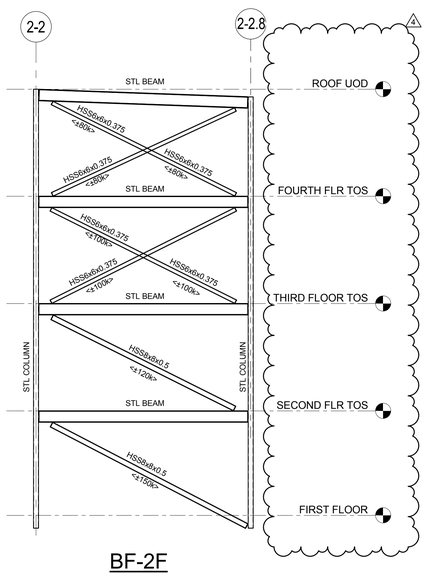

BF-2F
ALONG GRIDLINE 2-F

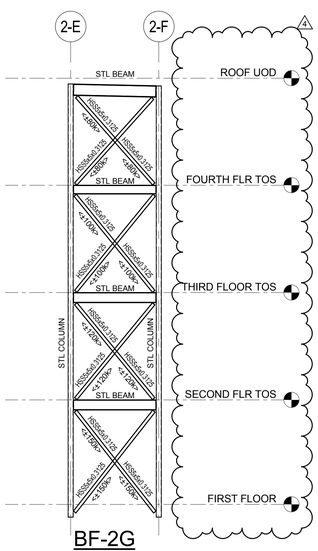

BF-2G
ALONG GRIDLINE 2-2.8

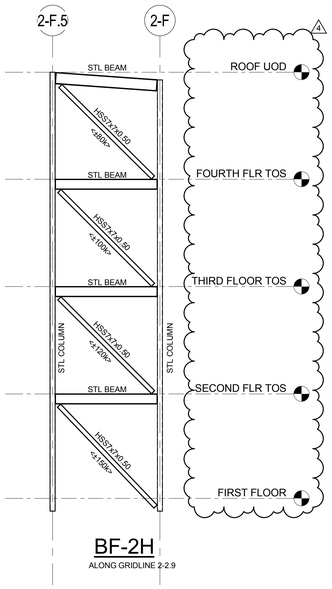

BF-2H
ALONG GRIDLINE 2-2.9

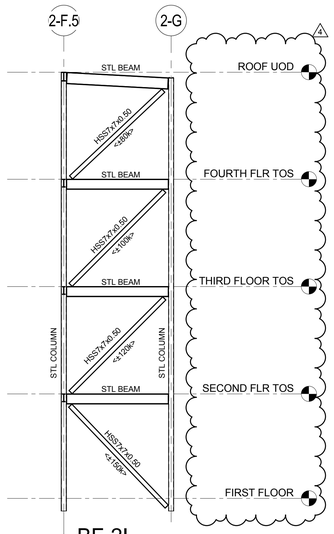

BF-2I
ALONG GRIDLINE 2-4

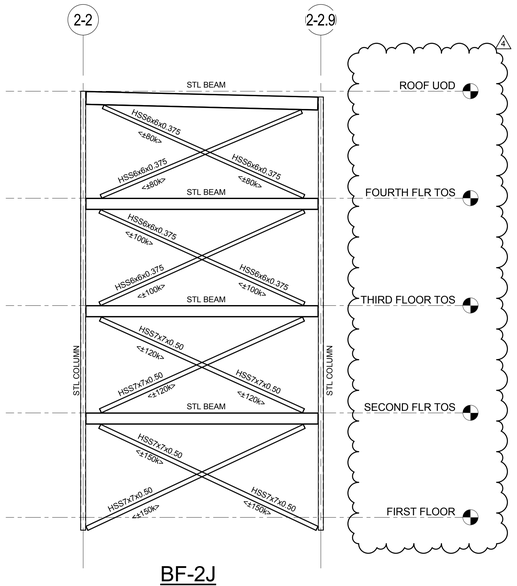

BF-2J
ALONG GRIDLINE 2-G

526 Boston Post Rd Wayland, MA
508.358.0790 www.ai3architects.com

Engineers Design Group Inc.
Structural Engineers
350 Main St. 2nd Flr
Malden, Ma 02148
(781)396-9007
(781)396-9008 (FAX)
EDG@EDGINC.COM

BEVERLY MIDDLE SCHOOL

CABOT STREET
BEVERLY, MA 01915

Copyright©2016 AI3 Architects, LLC

BID PACKAGE #3
FOUNDATIONS, STRUCTURAL STEEL, & SITEWORK

NORTH ARROW

ADDENDUMIZED DRAWINGS

KEYPLAN

DRAWING NAME:

BRACE FRAME ELEVATIONS

DRAWN BY: DH
REVIEWED BY: CJO
SCALE: 1/8" = 1'-0"
JOB NO: 2014-076
DATE: April 18, 2016

DRAWING NUMER: S4.03

5/20/2016 1:22:59 PM C:\Users\DHarris\Documents\Beverly - 2016_18May2016_105624_dharris.rvt

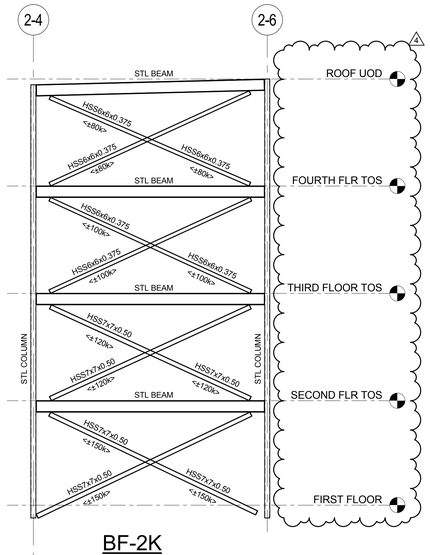

BF-2K
ALONG GRIDLINE 2-G

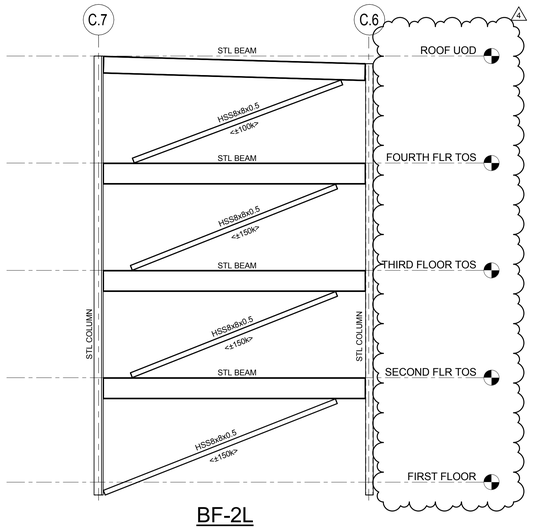

BF-2L
ALONG GRIDLINE 3.9

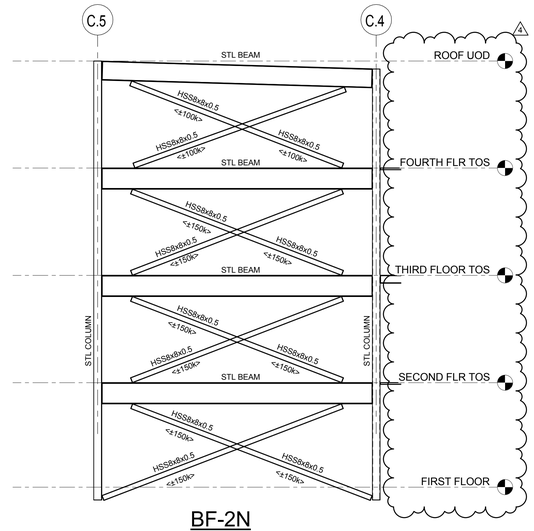

BF-2N
ALONG GRIDLINE 2-8

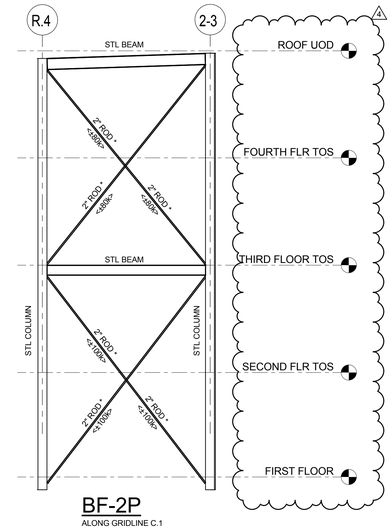

BF-2P
ALONG GRIDLINE C.1

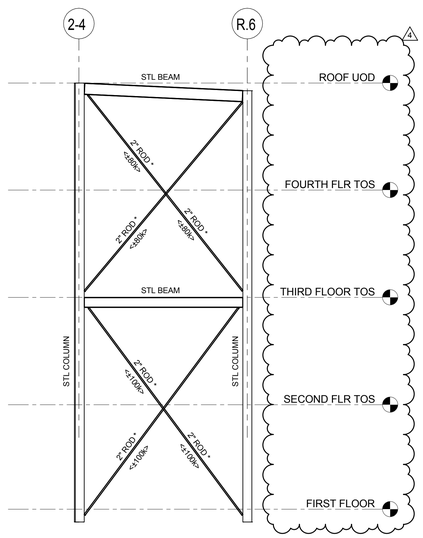

BF-2R
ALONG GRIDLINE C.1

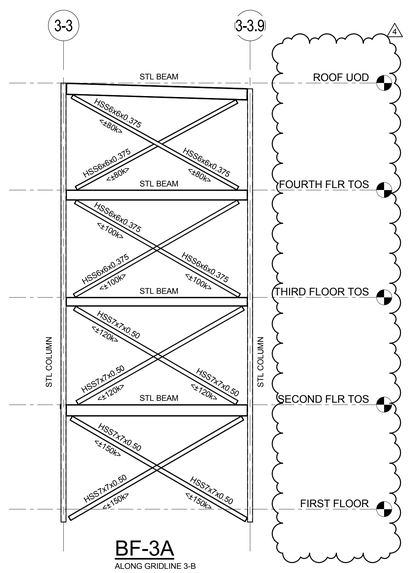

BF-3A
ALONG GRIDLINE 3-B

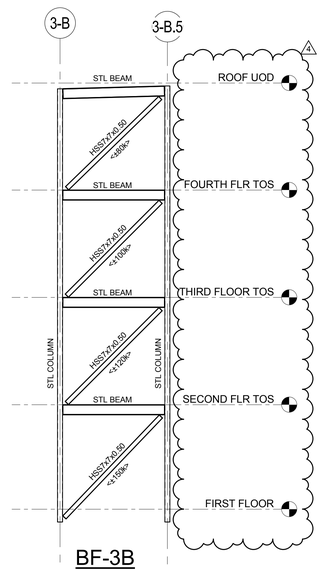

BF-3B
ALONG GRIDLINE 3-3.9

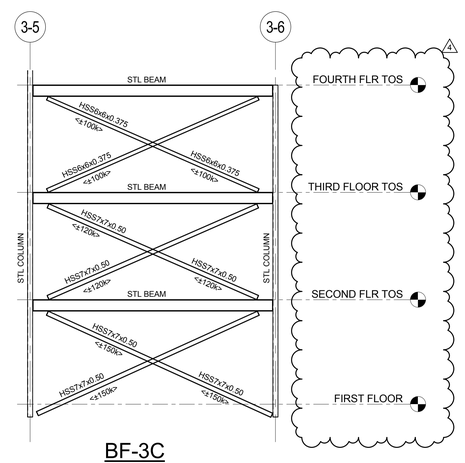

BF-3C
ALONG GRIDLINE 3-B

A3 architects
526 Boston Post Rd Wayland, MA
508.358.0790 www.ai3architects.com

EDG
Engineers Design Group Inc.
Structural Engineers
350 Main St. 2nd Flr
Malden, Ma 02148
(781)396-9007
(781)396-9008 (FAX)
EDG@EDGINC.COM

Copyright©2016 A3 Architects, LLC

BEVERLY MIDDLE SCHOOL

CABOT STREET
BEVERLY, MA 01915

BID PACKAGE #3
FOUNDATIONS, STRUCTURAL STEEL, & SITEWORK

NORTH ARROW

ADDENDUMIZED DRAWINGS

KEYPLAN

DRAWING NAME:

BRACE FRAME ELEVATIONS

DRAWN BY: DH
REVIEWED BY: CJO
SCALE: 1/8" = 1'-0"
JOB NO: 2014-076
DATE: April 18, 2016
DRAWING NUMER: S4.04

5/20/2016 1:23:02 PM C:\Users\DHarris\Documents\Beverly - 2016_18May2016_105624_dharris.rvt

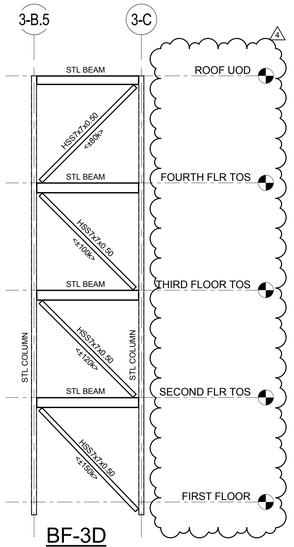

BF-3D
ALONG GRIDLINE 3.5

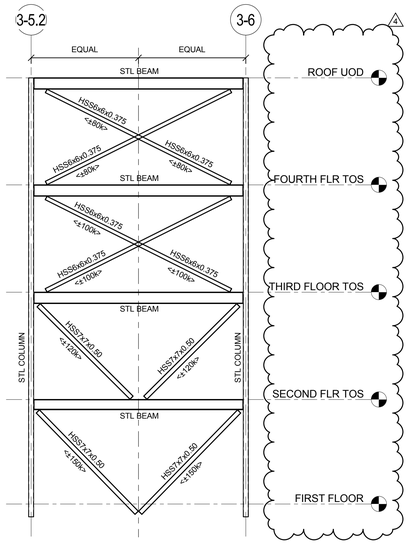

BF-3E
ALONG GRIDLINE 3-C

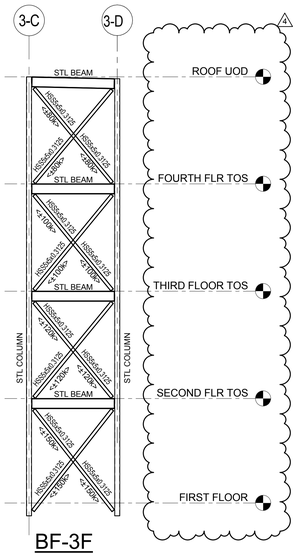

BF-3F
ALONG GRIDLINE 3-5.2

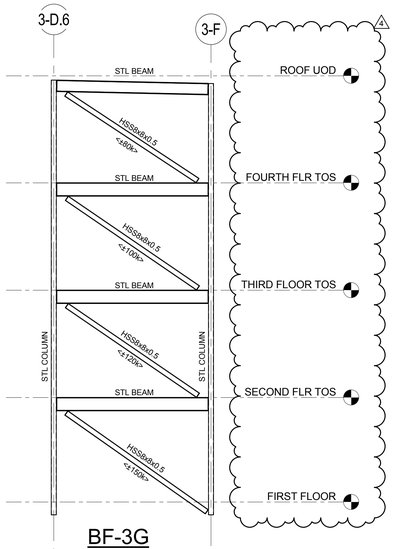

BF-3G
ALONG GRIDLINE 3.3-8

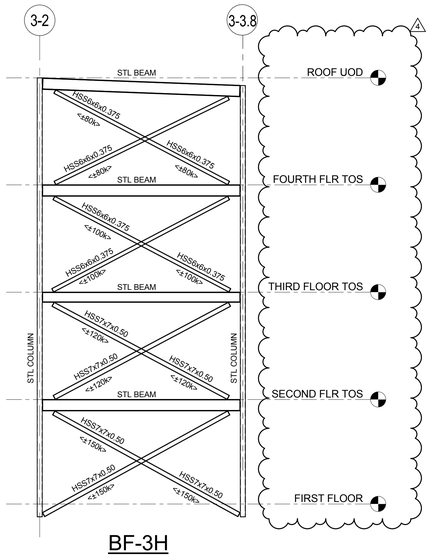

BF-3H
ALONG GRIDLINE 3-F

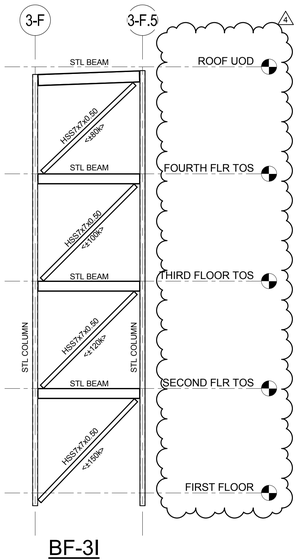

BF-3I
ALONG GRIDLINE 3-5.1

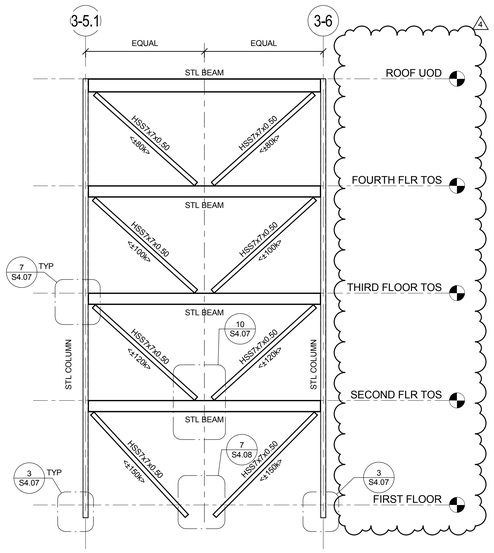

BF-3J
ALONG GRIDLINE 3-H

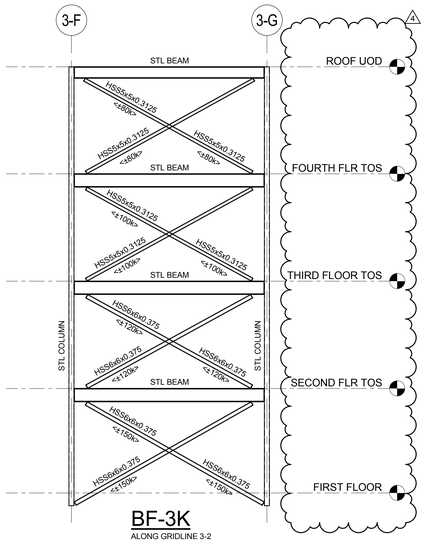

BF-3K
ALONG GRIDLINE 3-2

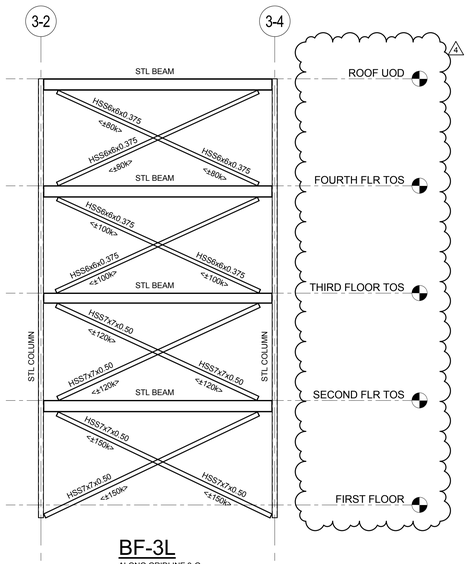

BF-3L
ALONG GRIDLINE 3-G

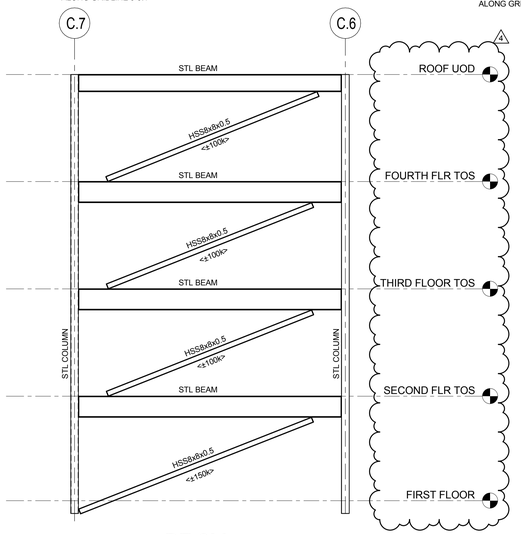

BF-3M
ALONG GRIDLINE 3.8

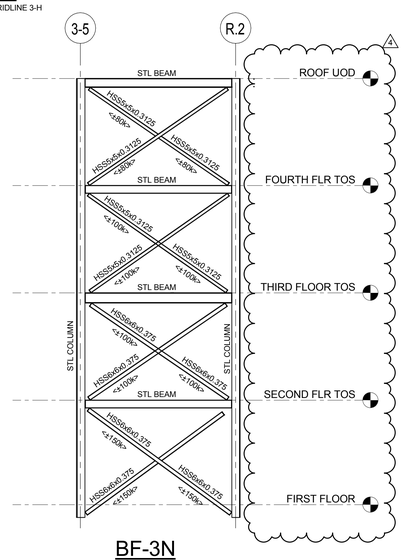

BF-3N
ALONG GRIDLINE 3-P

architects
526 Boston Post Rd Wayland, MA
508.358.0790 www.ai3architects.com

EDG
Engineers Design Group Inc.
Structural Engineers
350 Main St. 2nd Flr
Malden, Ma 02148
(781)396-9007
(781)396-9008 (FAX)
EDG@EDGINC.COM

Copyright©2016 AI3 Architects, LLC

BEVERLY MIDDLE SCHOOL

CABOT STREET
BEVERLY, MA 01915

BID PACKAGE #3
FOUNDATIONS, STRUCTURAL STEEL, & SITEWORK

NORTH ARROW | ADDENDUMIZED DRAWINGS

KEYPLAN

DRAWING NAME:

BRACE FRAME ELEVATIONS

DRAWN BY: DH
REVIEWED BY: CJO
SCALE: 1/8" = 1'-0"
JOB NO: 2014-076
DATE: April 18, 2016
DRAWING NUMER: S4.05

5/20/2016 1:23:07 PM C:\Users\Dharris\Documents\Beverly - 2016_18May2016_105624_dharris.rvt

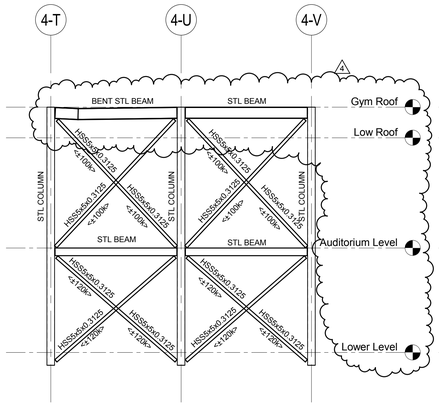

BF-4A
ALONG GRIDLINE 4-4

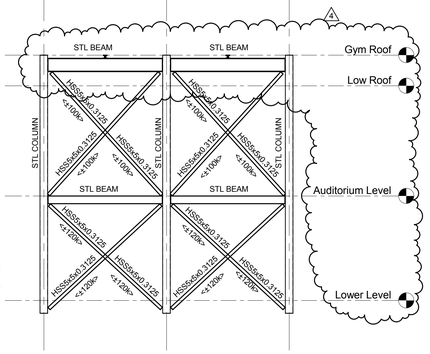

BF-4B
ALONG GRIDLINE 4-W

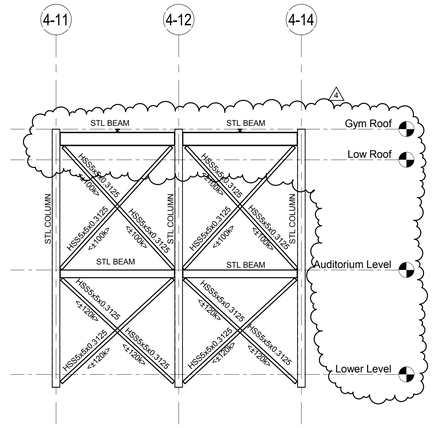

BF-4C
ALONG GRIDLINE 4-W

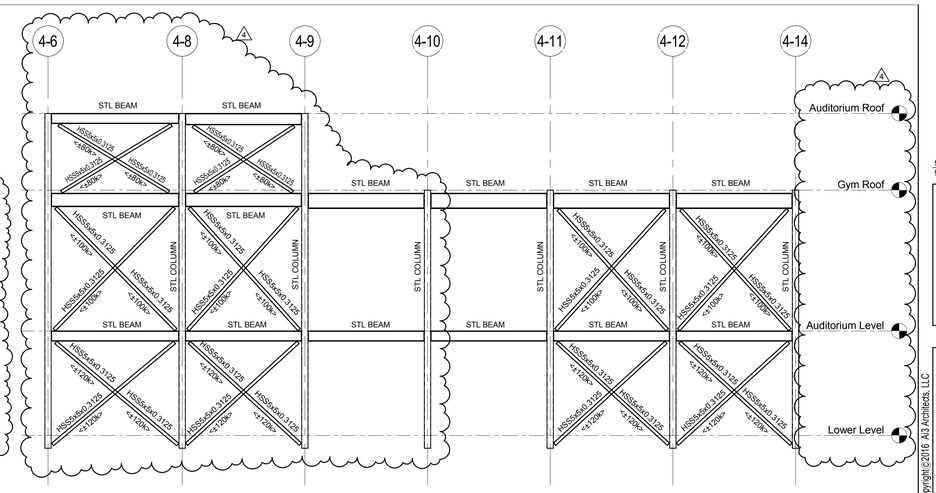

BF-4D
ALONG GRIDLINE 4-P

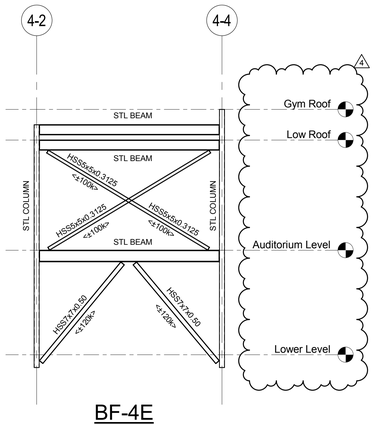

BF-4E
ALONG GRIDLINE 4-L

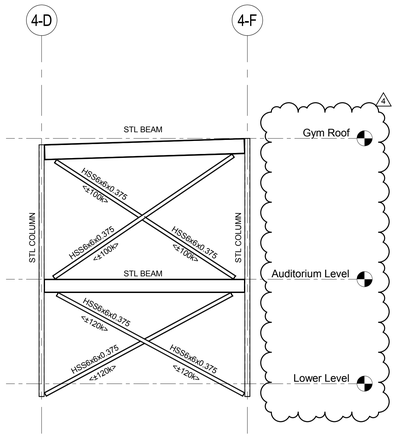

BF-4F
ALONG GRIDLINE 4-5

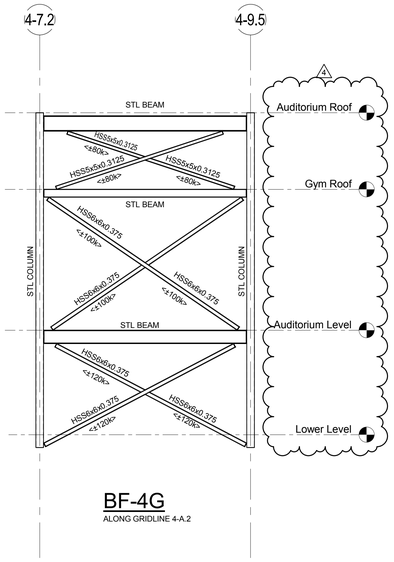

BF-4G
ALONG GRIDLINE 4-A.2

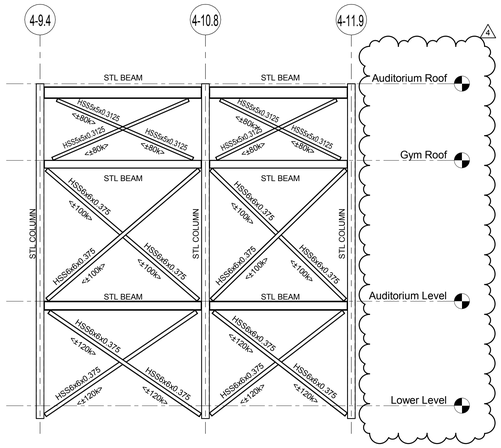

BF-4H
ALONG GRIDLINE 4-A.1

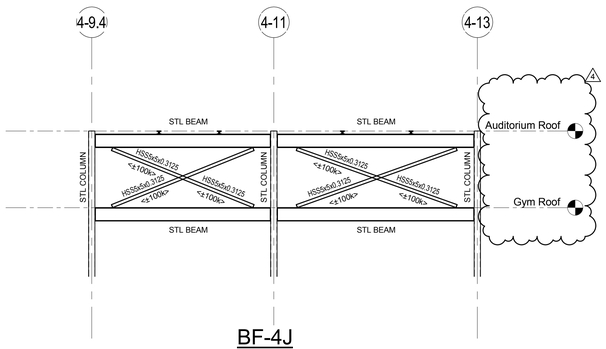

BF-4J
ALONG GRIDLINE 4-N

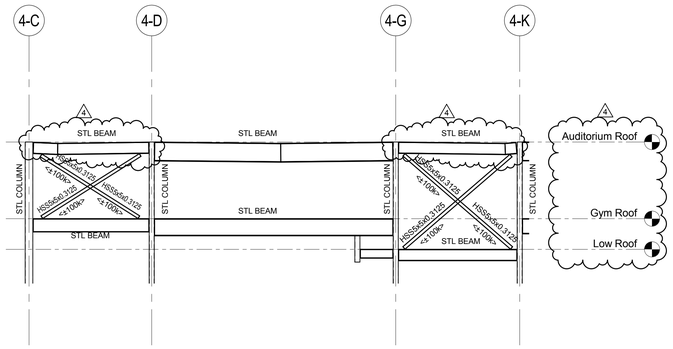

BF-4K
ALONG GRIDLINE 4-6

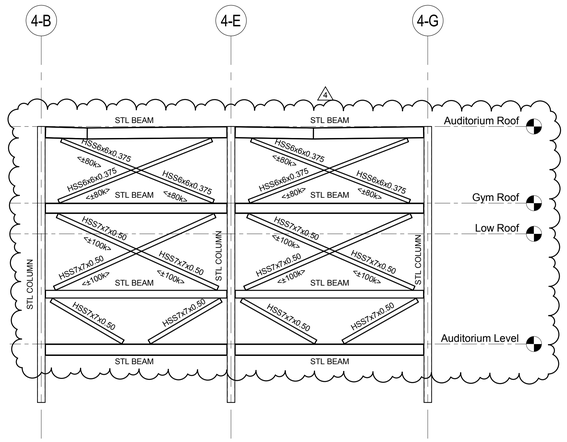

BF-4L
ALONG GRIDLINE 4-15

ai3 architects
526 Boston Post Rd Wayland, MA
508.358.0790 www.ai3architects.com

EDG
Engineers Design Group Inc.
Structural Engineers
350 Main St. 2nd Flr
Malden, Ma 02148
(781)396-9007
(781)396-9008 (FAX)
EDG@EDGINC.COM

Copyright©2016 AI3 Architects, LLC

BEVERLY MIDDLE SCHOOL

CABOT STREET
BEVERLY, MA 01915

BID PACKAGE #3
FOUNDATIONS, STRUCTURAL STEEL, & SITEWORK

NORTH ARROW | ADDENDUMIZED DRAWINGS

KEYPLAN

DRAWING NAME:

BRACE FRAME ELEVATIONS

DRAWN BY: DH
REVIEWED BY: CJO
SCALE: 1/8" = 1'-0"
JOB NO: 2014-076
DATE: April 18, 2016
DRAWING NUMER: S4.06

5/20/2016 1:23:11 PM C:\Users\DHarris\Documents\Beverly - 2016_18May2016_105624_dharris.rvt

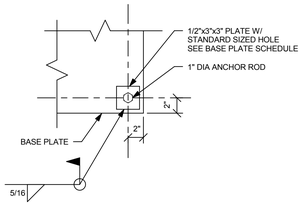

BASE PLATE DETAIL

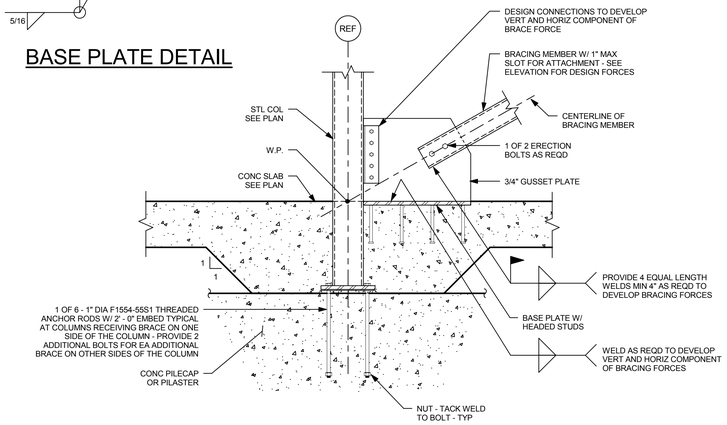

NOTE:
BRACING SHALL BE ERECTED AND WELDED
PRIOR TO CONCRETE SLAB PLACEMENT.

1

NO SCALE

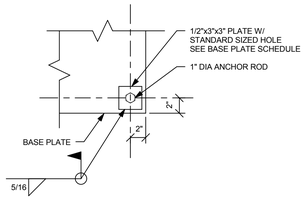

BASE PLATE DETAIL

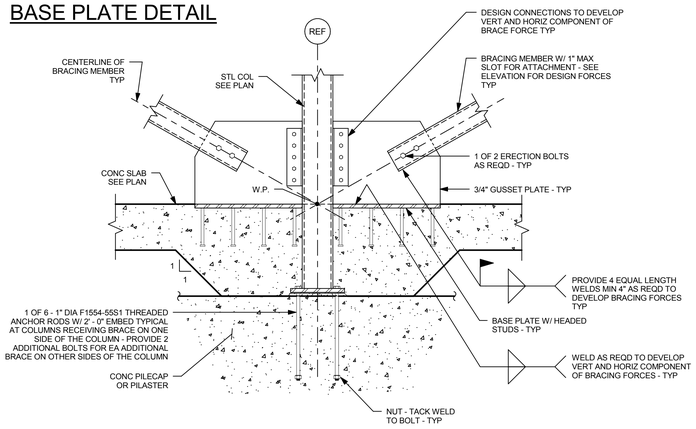

NOTE:
BRACING SHALL BE ERECTED AND WELDED
PRIOR TO CONCRETE SLAB PLACEMENT.

2

NO SCALE

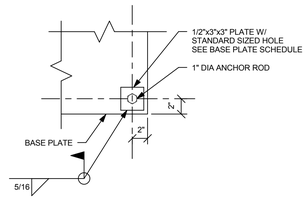

BASE PLATE DETAIL

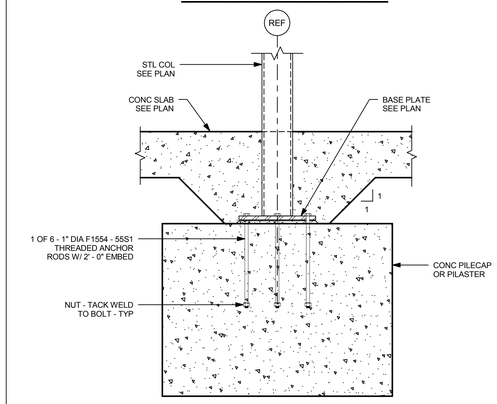

3

NO SCALE

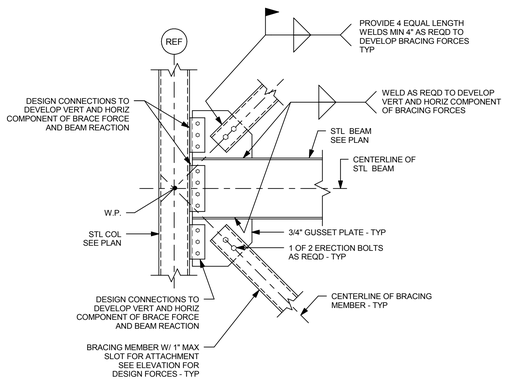

4

NO SCALE

5

NO SCALE

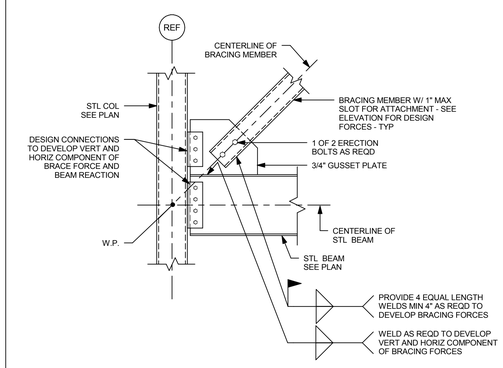

6

NO SCALE

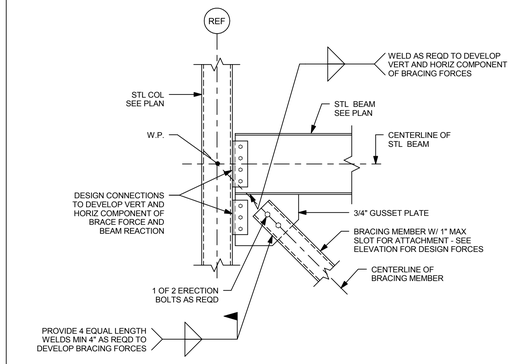

7

NO SCALE

8

NO SCALE

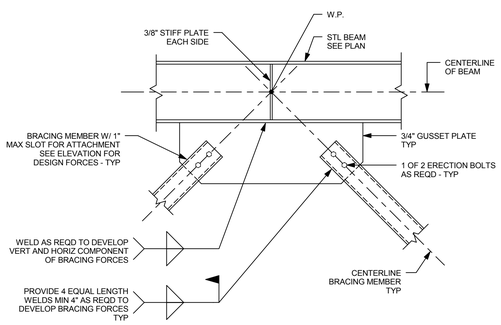

9

NO SCALE

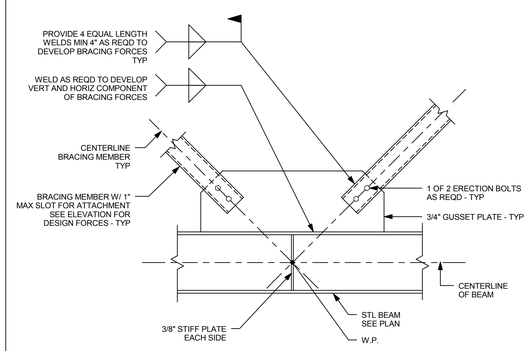

10

NO SCALE

11

NO SCALE

526 Boston Post Rd Wayland, MA
508.358.0790 www.ai3architects.com

Engineers Design Group Inc.
Structural Engineers
350 Main St. 2nd Flr
Malden, Ma 02148
(781)396-9007
(781)396-9008 (FAX)
EDG@EDGINC.COM

Copyright©2016 Ai3 Architects, LLC

BEVERLY
MIDDLE
SCHOOL

CABOT STREET
BEVERLY, MA 01915

BID PACKAGE #3
FOUNDATIONS,
STRUCTURAL STEEL,
& SITEWORK

NORTH ARROW | ADDENDUMIZED DRAWINGS

KEYPLAN

DRAWING NAME:

BRACE FRAME
DETAILS

DRAWN BY: DH
REVIEWED BY: CJO
SCALE: 3/4" = 1'-0"
JOB NO: 2014-076
DATE: April 18, 2016
DRAWING NUMER: S4.07

5/20/2016 1:23:13 PM C:\Users\DHarris\Documents\Beverly - 2016_18May2016_105624_dharris.rvt

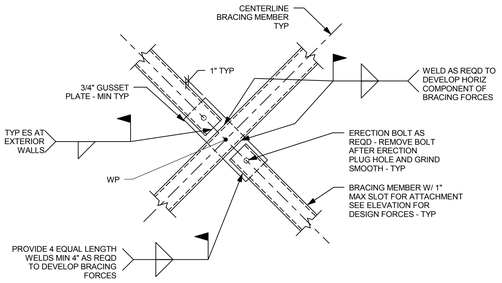

1

NO SCALE

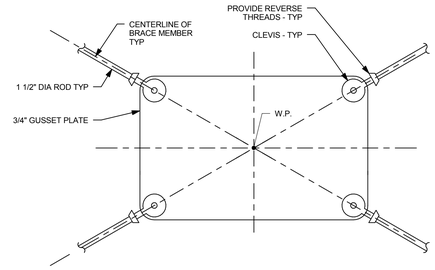

NOTES:

1.) REFER TO ARCHITECTURAL DRAWINGS DETAILS, FINISH AND ADDITIONAL INFORMATION.

2.) ALL EXPOSED STEEL TO RECEIVE A SPECIAL FINISH, REFER TO ARCHITECTURAL DRAWINGS AND SPECIFICATIONS.

3.) PROVIDE CONTINUOUS WELD WITH NO GAPS. SHOP SLOTS PROVIDED IN THE BRACE TO BE FULLY WELDED IN THE FIELD WITH NO GAPS AND GROUND SMOOTH.

4.) ALL EXPOSED BRACED FRAME COMPONENTS NOT ATTACHED DIRECTLY TO STRUCTURAL STEEL SHALL BE FABRICATED AND INSTALLED BY METAL FABRICATIONS.

2

NO SCALE

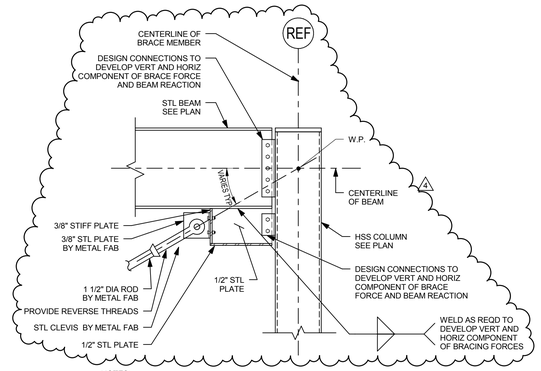

NOTES:

1.) REFER TO ARCHITECTURAL DRAWINGS DETAILS, FINISH AND ADDITIONAL INFORMATION.

2.) ALL EXPOSED STEEL TO RECEIVE A SPECIAL FINISH, REFER TO ARCHITECTURAL DRAWINGS AND SPECIFICATIONS.

3.) PROVIDE CONTINUOUS WELD WITH NO GAPS. SHOP SLOTS PROVIDED IN THE BRACE TO BE FULLY WELDED IN THE FIELD WITH NO GAPS AND GROUND SMOOTH.

4.) ALL EXPOSED BRACED FRAME COMPONENTS NOT ATTACHED DIRECTLY TO STRUCTURAL STEEL SHALL BE FABRICATED AND INSTALLED BY METAL FABRICATIONS.

5.) DO NOT INSTALL RODS UNTIL ALL ROOF DEAD LOADS ARE IN PLACE.

3

NO SCALE

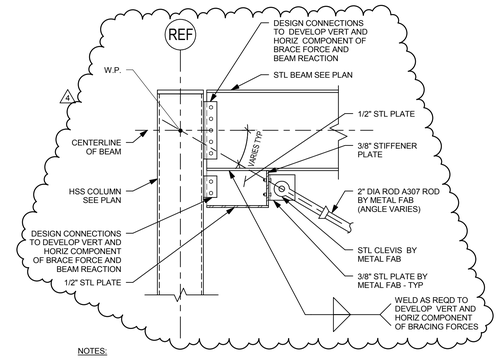

NOTES:

1.) REFER TO ARCHITECTURAL DRAWINGS DETAILS, FINISH AND ADDITIONAL INFORMATION.

2.) ALL EXPOSED STEEL TO RECEIVE A SPECIAL FINISH, REFER TO ARCHITECTURAL DRAWINGS AND SPECIFICATIONS.

3.) PROVIDE CONTINUOUS WELD WITH NO GAPS. SHOP SLOTS PROVIDED IN THE BRACE TO BE FULLY WELDED IN THE FIELD WITH NO GAPS AND GROUND SMOOTH.

4.) ALL EXPOSED BRACED FRAME COMPONENTS NOT ATTACHED DIRECTLY TO STRUCTURAL STEEL SHALL BE FABRICATED AND INSTALLED BY METAL FABRICATIONS.

5.) DO NOT INSTALL RODS UNTIL ALL ROOF DEAD LOADS ARE IN PLACE.

4

NO SCALE

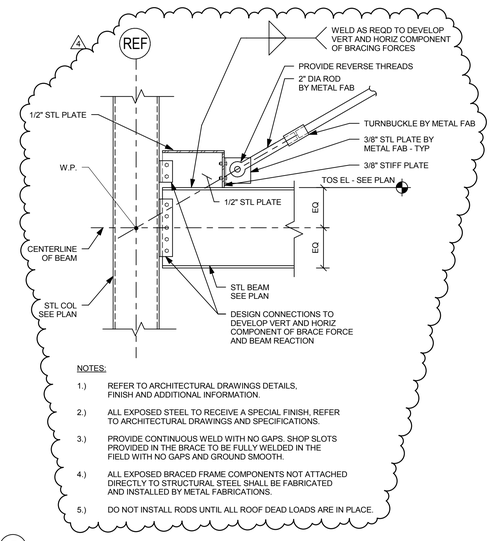

NOTES:

1.) REFER TO ARCHITECTURAL DRAWINGS DETAILS, FINISH AND ADDITIONAL INFORMATION.

2.) ALL EXPOSED STEEL TO RECEIVE A SPECIAL FINISH, REFER TO ARCHITECTURAL DRAWINGS AND SPECIFICATIONS.

3.) PROVIDE CONTINUOUS WELD WITH NO GAPS. SHOP SLOTS PROVIDED IN THE BRACE TO BE FULLY WELDED IN THE FIELD WITH NO GAPS AND GROUND SMOOTH.

4.) ALL EXPOSED BRACED FRAME COMPONENTS NOT ATTACHED DIRECTLY TO STRUCTURAL STEEL SHALL BE FABRICATED AND INSTALLED BY METAL FABRICATIONS.

5.) DO NOT INSTALL RODS UNTIL ALL ROOF DEAD LOADS ARE IN PLACE.

5

NO SCALE

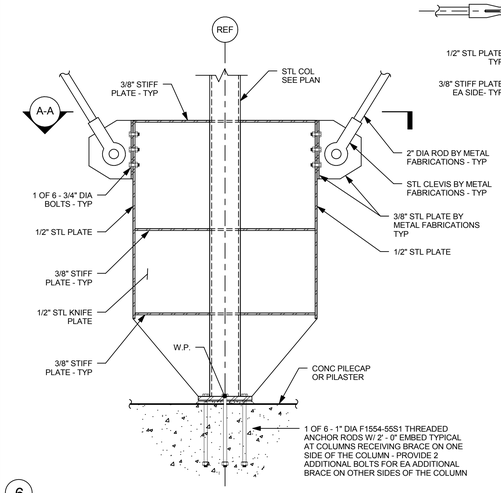

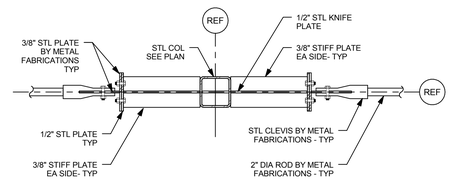

DETAIL A-A

6

NO SCALE

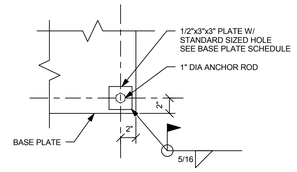

BASE PLATE DETAIL

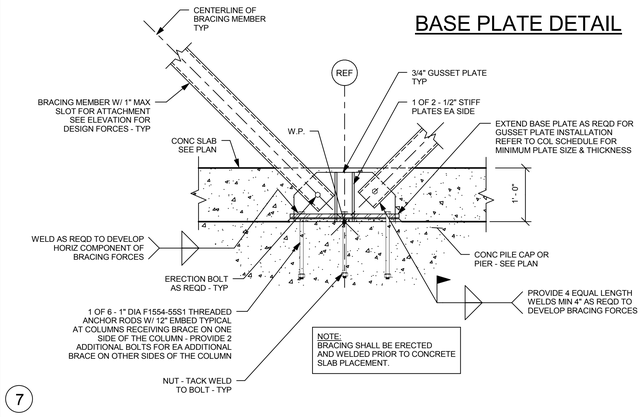

7

NO SCALE

8

NO SCALE

9

NO SCALE

10

NO SCALE

11

NO SCALE

A13 architects
526 Boston Post Rd Wayland, MA
508.358.0790 www.ai3architects.com

EDG Engineers Design Group Inc.
Structural Engineers
350 Main St. 2nd Flr
Malden, Ma 02148
(781)396-9007
(781)396-9008 (FAX)
EDG@EDGINC.COM

Copyright©2016 A13 Architects, LLC

BEVERLY MIDDLE SCHOOL

CABOT STREET
BEVERLY, MA 01915

BID PACKAGE #3
FOUNDATIONS, STRUCTURAL STEEL, & SITEWORK

NORTH ARROW | ADDENDUMIZED DRAWINGS

KEYPLAN

DRAWING NAME:

BRACE FRAME DETAILS

DRAWN BY: DH
REVIEWED BY: CJO
SCALE: 3/4" = 1'-0"
JOB NO: 2014-076
DATE: April 18, 2016
DRAWING NUMER: S4.08

5/20/2016 1:23:15 PM C:\Users\DHarris\Documents\Beverly - 2016_18May2016_105624_dharris.rvt

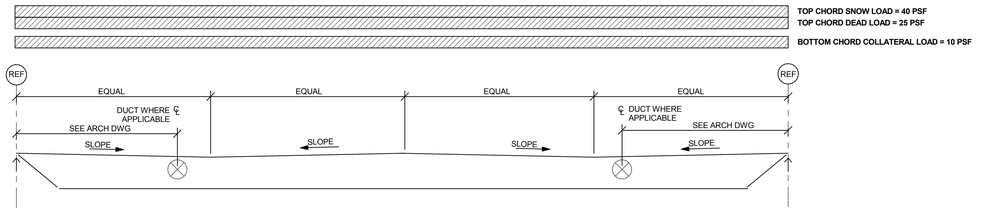

JOIST LOAD DIAGRAM AND PROFILE FOR 56DLH SP1

NOTE: DEAD LOADS DO NOT INCLUDE SELF WEIGHT OF JOIST

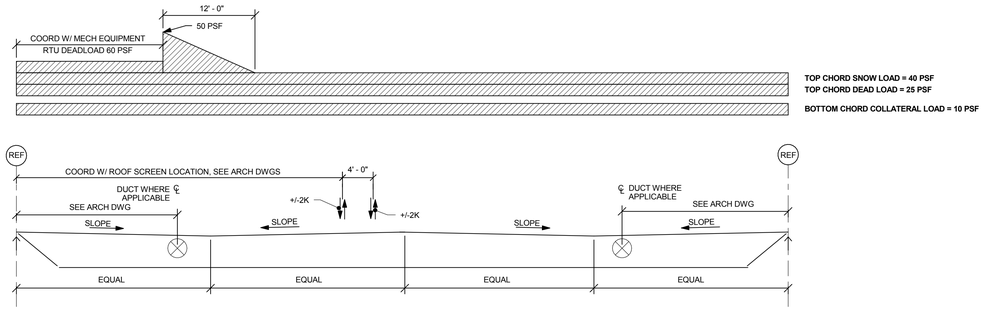

JOIST LOAD DIAGRAM AND PROFILE FOR 56DLH SP2

NOTE: DEAD LOADS DO NOT INCLUDE SELF WEIGHT OF JOIST

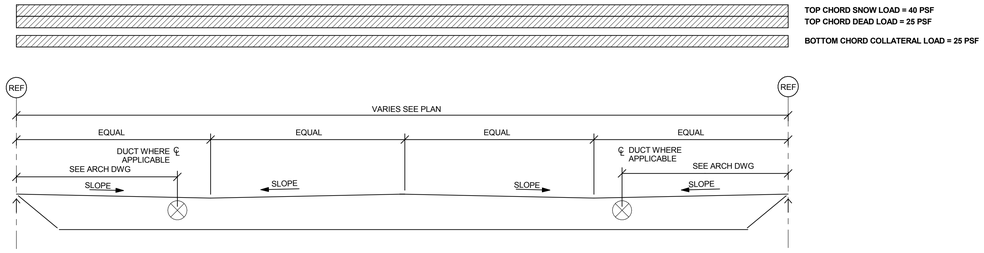

JOIST LOAD DIAGRAM AND PROFILE FOR 68DLH SP1

NOTE: DEAD LOADS DO NOT INCLUDE SELF WEIGHT OF JOIST

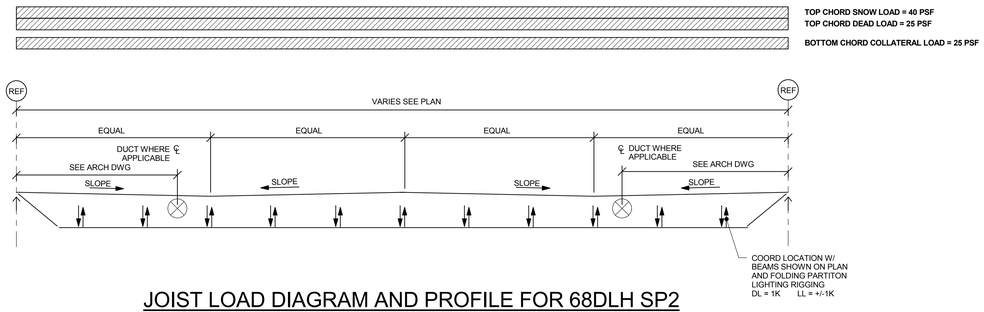

JOIST LOAD DIAGRAM AND PROFILE FOR 68DLH SP2

NOTE: DEAD LOADS DO NOT INCLUDE SELF WEIGHT OF JOIST

JOIST LOAD DIAGRAM:

1.) JOISTS DEPTH AT SPECIFED IS AT MIDSPAN JOIST DEPTH AT SUPPORT IS BASED ON ROOF SLOPE COORD WITH ARCH DWGS.

2.) SPLICE AT MID - SPAN. SPLICE CONNECTION DETAIL BY JOIST SUPPLIER IS SUBJECT TO REVIEW AND APPROVAL OF ARCHITECT AND ENGINEER OF RECORD.

3.) JOIST WEB CONFIGURATION IS BY JOIST SUPPLIER. WEB CONFIGURATION SHALL BE COMPATIBLE WITH MECHANICAL DUCT LAYOUT.

4.) TOP CHORD DOUBLE PITCHED UNDER-SLUNG JOIST. SYMETRICAL ABOUT MIDSPAN.

5.) JOIST SEAT DEPTH = 7 1/2".

6.) DESIGN LOADS ARE ALLOWABLE STRESS DESIGN.

7.) MAXIMUM LIVE LOAD DEFLECTION = SPAN/360.

8.) IN ADDITION TO SLOPE PROVIDE CAMBER SPECIFIED ON PLAN. REDUCE CAMBER BY ONE-HALF FOR JOIST ADJACENT TO STRUCTURAL STEEL FRAMING.

9.) IN ADDITION TO THE LOADS SHOWN ON THE DIAGRAMS, DESIGN JOIST FOR CONCENTRATED LOADS FROM MOTORIZED GYM CURTAIN AND THE BASKETBALL BACKSTOP SUPPORT POINTS. REFER TO THE ARCHITECTURAL DRAWINGS AND BASKETBALL BACKSTOP MANUFACTURERS DRAWINGS FOR LOAD MAGNITUDES AND LOCATIONS.

10.) REFER TO SPECIFICATIONS FOR UPLIFT LOAD ON THE TRUSSES, DO NOT USE DESIGN DEAD LOAD TO OFFSET UPLIFT LOADS, ONLY SELF WEIGHT OF THE JOIST AND METAL ROOF DECK CAN BE USED TO OFFSET ANY UPLIFT LOADS.

11.) DESIGN ALL JOISTS FOR ADDITIONAL UPWARD LOAD OF 200 POUNDS AT FIRST POINT AT EACH END.

ai3 architects
526 Boston Post Rd Wayland, MA
508.358.0790 www.ai3architects.com

EDG
Engineers Design Group Inc.
Structural Engineers
350 Main St. 2nd Flr
Malden, Ma 02148
(781)396-9007
(781)396-9008 (FAX)
EDG@EDGINC.COM

Copyright©2016 AI3 Architects, LLC

BEVERLY MIDDLE SCHOOL

CABOT STREET
BEVERLY, MA 01915

BID PACKAGE #3
FOUNDATIONS, STRUCTURAL STEEL, & SITEWORK

NORTH ARROW | ADDENDUMIZED DRAWINGS

KEYPLAN

DRAWING NAME:

JOIST LOADING DIAGRAMS

DRAWN BY: DH
REVIEWED BY: CJO
SCALE: 1/8" = 1'-0"
JOB NO: 2014-076
DATE: April 18, 2016
DRAWING NUMER: S5.01

5/20/2016 1:23:16 PM C:\Users\DHarris\Documents\Beverly - 2016_18May2016_105624_dharris.rvt