DIVISION 00 - BIDDING AND CONTRACT REQUIREMENTS

00 01 01 NOT USED

00 01 01.01 NOT USED

DIVISION 01 - GENERAL REQUIREMENTS

01 00 01 NOT USED

01 00 01.01 NOT USED

DIVISION 02 - EXISTING CONDITIONS

02 00 01 NOT USED

02 00 01.01 NOT USED

DIVISION 03 - CONCRETE

03 05 13 CONCRETE SEALERS

03 05 13.01 CONCRETE SEALER
03 05 13.02 PRIMER

03 30 00 CAST-IN-PLACE CONCRETE

03 30 00.01 CONCRETE
03 30 00.02 CONCRETE SLAB ON GRADE – SEE STRUCTURAL
03 30 00.03 CONCRETE SLAB ON DECK – SEE STRUCTURAL
03 30 00.04 CONCRETE FOOTING – SEE STRUCTURAL
03 30 00.05 CONCRETE FOUNDATION – SEE STRUCTURAL
03 30 00.06 CONCRETE WALL – SEE STRUCTURAL
03 30 00.07 CONCRETE PIER – SEE STRUCTURAL
03 30 00.08 CONCRETE PAD – SEE STRUCTURAL
03 30 00.09 CONCRETE GRADE BEAM – SEE STRUCTURAL
03 30 00.11 EXPANDABLE JOINT FILLER
03 30 00.12 NORMAL WEIGHT CONCRETE – SEE STRUCTURAL

03 30 00.21 SAW CUT JOINT

03 30 00.31 REINFORCING STEEL BAR – SEE STRUCTURAL

DIVISION 04 - MASONRY

04 20 00 UNIT MASONRY

04 20 00.01 CMU – STANDARD – NORMAL WEIGHT – REFERENCE DRAWINGS FOR DEPTH SIZE AND FIRE RATING
04 20 00.02 CMU BOND BEAM – SEE STRUCTURAL

04 20 00.50 MASONRY MORTAR
04 20 00.51 GROUT FILL

04 20 00.61 TYPICAL MASONRY ANCHOR/TIES – REFERENCE SPECIFICATION FOR SPACING
04 20 00.62 HORIZONTAL MASONRY REINFORCING– GALVANIZED TRUSS TYPE
04 20 00.63 COMPRESSIBLE FILLER AT TOP OF MASONRY PARTITIONS AND EXPANSION JOINTS
04 20 00.64 SEALANT – TYPE AS REQUIRED

04 40 00 NATURAL THIN VENEER STONE

04 40 00.01 STONE VENEER
04 40 00.02 STONE CORNER

04 40 00.05 STONE SILL

04 40 00.10 GALVANIZED METAL LATH
04 40 00.11 SCRATCH COAT
04 40 00.12 MORTAR
04 40 00.13 GROUT
04 40 00.14 WEEP SCREED
04 40 00.15 CONTROL JOINT

04 40 00.20 STONE SILL SUPPORT CLIP/BRACKET

04 73 16 SIMULATED STONE VENEER

04 73 16.01 SIMULATED STONE VENEER
04 73 16.02 SIMULATED STONE CORNER

04 73 16.05 SIMULATED STONE SILL

04 73 16.10 GALVANIZED METAL LATH
04 73 16.11 SCRATCH COAT
04 73 16.12 MORTAR
04 73 16.13 GROUT
04 73 16.14 WEEP SCREED
04 73 16.15 CONTROL JOINT

04 73 16.20 STONE SILL SUPPORT CLIP/BRACKET

DIVISION 05 - METALS

05 12 00 STRUCTURAL STEEL FRAMING

05 12 00.01 STEEL BEAM – SEE STRUCTURAL
05 12 00.02 STEEL COLUMN – SEE STRUCTURAL
05 12 00.06 STEEL TUBE – SEE STRUCTURAL
05 12 00.08 STEEL TUBE COLUMN – SEE STRUCTURAL

05 12 00.10 STEEL OUTRIGGER – SEE STRUCTURAL
05 12 00.11 STEEL WIDE FLANGE OUTRIGGER – SHOP APPLIED COLOR COATING – SEE STRUCTURAL
05 12 00.14 STEEL TRUSS – SEE STRUCTURAL
05 12 00.16 STEEL CHANNEL – SEE STRUCTURAL
05 12 00.18 STEEL ANGLE CONTINUOUS – SEE STRUCTURAL
05 12 00.19 STEEL TUBE STRINGER – SEE STRUCTURAL

05 12 00.20 STEEL RELIEVING ANGLE – SEE STRUCTURAL
05 12 00.32 STEEL PLATE – SEE STRUCTURAL
05 12 00.36 STEEL PLATE BENT – SEE STRUCTURAL

05 12 00.40 BRACE FRAME – SEE STRUCTURAL

05 12 00.50 SHOP APPLIED COLOR COATING

05 12 00.60 STEEL BENT PLATE – 7 x 14 x 5/16 – CONTINUOUS – 1/2 INCH DIA HOLES @ VERTICAL LEG AT 32 INCHES O.C. – WELD TO STRUCTURAL STEEL – SEE STRUCTURAL
05 12 00.61 STEEL BENT PLATE – 7 x 10 1/2 x 5/16 – CONTINUOUS – 1/2 INCH DIA HOLES @ VERTICAL LEG AT 32 INCHES O.C. – WELD TO STRUCTURAL STEEL – SEE STRUCTURAL
05 12 00.62 STEEL BENT PLATE – 7 x 8 1/2 x 5/16 – CONTINUOUS – 1/2 INCH DIA HOLES @ VERTICAL LEG AT 32 INCHES O.C. – WELD TO STRUCTURAL STEEL – SEE STRUCTURAL

05 15 00 STUD SHEAR CONNECTORS

05 15 00.01 STEEL SHEAR STUD CONNECTORS – SEE STRUCTURAL

05 31 00 STEEL DECKING

05 31 00.01 COMPOSITE STEEL DECK – SEE STRUCTURAL
05 31 00.02 POUR STOP – FLOOR SLAB – SEE STRUCTURAL
05 31 00.03 STEEL FORM DECK – SEE STRUCTURAL

05 31 00.10 STEEL ROOF DECK – 1 1/2 INCH GALVANIZED – SEE STRUCTURAL
05 31 00.11 STEEL ROOF DECK – 3 INCH GALVANIZED – SEE STRUCTURAL
05 31 00.12 STEEL ROOF DECK – 1 1/2 INCH CELLULAR ACOUSTICAL DECK – SEE STRUCTURAL
05 31 00.13 STEEL ROOF DECK – 3 INCH CELLULAR ACOUSTICAL DECK – SEE STRUCTURAL

05 40 00 COLD FORMED METAL FRAMING

05 40 00.01 STEEL STUDS – 1 5/8 INCH – 16 INCHES O.C. MAX
05 40 00.02 STEEL STUDS – 2 1/2 INCH – 16 INCHES O.C. MAX
05 40 00.03 STEEL STUDS – 3 5/8 INCH – 16 INCHES O.C. MAX
05 40 00.04 STEEL STUDS – 4 INCH – 16 INCHES O.C. MAX
05 40 00.05 STEEL STUDS – 5 INCH – 16 INCHES O.C. MAX
05 40 00.06 STEEL STUDS – 6 INCH – 16 INCHES O.C. MAX
05 40 00.08 STEEL STUDS – 8 INCH – 16 INCHES O.C. MAX
05 40 00.10 STEEL STUDS – 10 INCH – 16 INCHES O.C. MAX
05 40 00.11 STEEL STUDS – 11 INCH – 16 INCHES O.C. MAX
05 40 00.12 STEEL STUDS – 12 INCH – 16 INCHES O.C. MAX

05 40 00.17 STEEL Z–CLIP – 16 INCHES O.C. MAX
05 40 00.18 STEEL Z–CLIP – 3 INCH – 16 INCHES O.C. MAX
05 40 00.19 STEEL Z–CLIP – 16 GAGE MIN. – 1 INCH MIN. DEPTH – 16 INCHES O.C. MAX

05 40 00.21 ISOLATION HANGER
05 40 00.22 NEOPRENE PAD
05 40 00.23 METAL CEILING HANGER – ENGINEERED TO SUPPORT CEILING SYSTEM

05 40 00.25 METAL FURRING – 7/8 INCH

05 40 00.40 DOUBLE STUD AT JAMB – SIZE AS REQUIRED
05 40 00.41 STEEL STUD & TRACK – BOXED HEADER
05 40 00.42 STEEL BUILT–UP COLUMN

05 40 00.55 14 GAGE BENT GALVANIZED STEEL PLATE – SECURE TO STRUCTURAL MEMBER AS REQUIRED – SIZE AS NOTED OR DRAWN
05 40 00.56 LIGHT GAGE BENT PLATE – SIZE AS REQUIRED

05 40 00.60 DOUBLE STEEL STUD CLEAT – 10 INCH – CONTINUOUS
05 40 00.61 DOUBLE STEEL STUD CLEAT – 4 INCH – CONTINUOUS

05 50 00 METAL FABRICATIONS

05 50 00.01 STEEL ANGLE – 6 x 4 x 5/16 LLV – CONTINUOUS – 1/2 INCH DIA SLOTTED HOLES @ VERTICAL LEG STAGGERED – HOLES @ 36 INCHES O.C.
05 50 00.02 STEEL ANGLE – 8 x 8 x 1/2 LLV – CONTINUOUS – 1/2 INCH DIA SLOTTED HOLES @ VERTICAL LEG STAGGERED – HOLES @ 36 INCHES O.C.
05 50 00.03 STEEL ANGLE – 5 x 3 x 5/16 LLH – CONTINUOUS – 1/2 INCH DIA SLOTTED HOLES @ VERTICAL LEG STAGGERED – HOLES @ 36 INCHES O.C.
05 50 00.04 STEEL ANGLE – 5 x 3 x 1/2 LLH – CONTINUOUS – 1/2 INCH DIA SLOTTED HOLES @ VERTICAL LEG STAGGERED – HOLES @ 36 INCHES O.C.

05 50 00.10 STEEL ANGLE – SEISMIC CLIP – SEE STRUCTURAL
05 50 00.11 STEEL ANGLE – SUPPORT FOR ELEVATOR SILL – SIZE AS REQUIRED

05 50 00.12 STEEL ANGLE – SEE STRUCTURAL
05 50 00.13 STEEL ANGLE CONTINUOUS – SIZE AS NOTED OR DRAWN
05 50 00.14 ALUMINUM CEILING TRUSS

05 50 00.21 STEEL TUBE – SEE STRUCTURAL
05 50 00.22 STEEL BEAM – SEE STRUCTURAL

05 50 00.31 STEEL CHANNEL – ROOF OPENING – SEE STRUCTURAL
05 50 00.32 STEEL BENT PLATE – SEE STRUCTURAL

05 50 00.40 STEEL PLATE – 20 GAGE – SECURE TO EACH STUD
05 50 00.41 STEEL PLATE – 1/4 INCH THICK
05 50 00.42 STEEL PLATE – 5/16 INCH THICK
05 50 00.43 STEEL PLATE – 3/8 INCH THICK
05 50 00.44 STEEL PLATE – 1/2 INCH THICK
05 50 00.45 STEEL PLATE – 5/8 INCH THICK
05 50 00.46 STEEL PLATE – 1/4 INCH THICK, 12 INCHES IN LENGTH, COORDINATE HEIGHT OF PLATE, LOCATIONS AND QUANTITY OF PLATES WITH LOCATIONS AND QUANTITIES OF PROJECTION SCREEN MOUNTING BRACKETS

05 50 00.51 STEEL ANGLE LINTEL – REFERENCE STRUCTURAL STEEL SCHEDULE

05 50 00.55 STEEL ANGLE – 1–1/2 INCH x 1–1/2 INCH X 4 INCH
05 50 00.56 THREADED ROD – 1/4 INCH DIA WITH WASHERS AND BOLTS – CUT ROD FLUSH TO BOLTS AND GRIND SMOOTH

05 50 00.60 SHOP APPLIED COLOR COATING

05 50 00.70 CLEVIS – NUMBER 5 – SEE STRUCTURAL
05 50 00.71 STEEL ROD – 2 INCH DIAMETER – SEE STRUCTURAL
05 50 00.72 STEEL PLATE – 3/8 INCH THICK – SEE STRUCTURAL
05 50 00.73 3/4" STEEL BOLT – SEE STRUCTURAL

05 50 00.75 STAINLESS STEEL MOUNTING FLANGE
05 50 00.76 STAINLESS STEEL BENT PLATE – 1/8 INCH THICK

05 50 00.80 THREADED POST – 1/4 INCH DIAMETER – WELDED TO LETTER
05 50 00.81 ANCHOR BOLT
05 50 00.82 EXPANSION BOLT

05 50 00.85 ALUMINUM MARKER TROUGH
05 50 00.86 ALUMINUM SHEET
05 50 00.87 ALUMINUM CHANNEL
05 50 00.88 STAINLESS STEEL MECHANICAL FASTENER & WASHER

05 50 00.91 STEEL BOLLARD – INSTALLED BY SITE CONTRACTOR
05 50 00.93 ROOF ACCESS LADDER – INTERIOR
05 50 00.94 ROOF ACCESS LADDER – EXTERIOR
05 50 00.95 ROOF ACCESS LADDER CAGE
05 50 00.96 CATWALK ACCESS LADDER – INTERIOR
05 50 00.99 SHIPS LADDER

05 51 00 METAL STAIRS AND RAILINGS

05 51 00.01 STEEL PAN TREAD AND RISER
05 51 00.02 STEEL PAN LANDING
05 51 00.03 STEEL CHANNEL STRINGER
05 51 00.04 STEEL CHANNEL HEADER
05 51 00.05 STEEL CLOSURE PLATE – WELDED AND GROUND SMOOTH
05 51 00.06 STEEL TUBE LANDING BEAM
05 51 00.07 STEEL TUBE STRINGER

05 51 00.10 STEEL ANGLE CONTINUOUS
05 51 00.11 STEEL ANGLE CLIP
05 51 00.12 STEEL ANGLE CARRIER
05 51 00.14 STEEL ANGLE 5 x 5 x 3/8 – WELD TO STEEL STRINGER

05 51 00.15 STEEL ANGLE 2 X 2 X 3/8

05 51 00.16 STEEL PLATE – 1/2 INCH

05 51 00.17 STEEL PLATE – 1/4 INCH

05 51 00.18 STEEL PLATE – 1/2 INCH – CUSTOM CUT

05 51 00.19 STEEL PLATE – 1/4 INCH – CUSTOM CUT

05 51 00.20 STEEL PIPE GUARDRAIL – 1–1/2 INCH O.D.
05 51 00.21 STEEL PIPE GUARDRAIL POST – 1–1/2 INCH O.D.
05 51 00.22 STEEL PIPE HANDRAIL – 1–1/2 INCH O.D.
05 51 00.24 STEEL HANDRAIL BRACKET
05 51 00.25 STEEL HANDRAIL POST BRACKET
05 51 00.26 STEEL POST CANOPY

05 51 00.32 STAINLESS STEEL INTERMEDIATE HANDRAIL WITH POSTS ANCHORED TO FLOOR
05 51 00.33 STAINLESS STEEL PIPE HANDRAIL – 1–1/2 INCH O.D.
05 51 00.34 STAINLESS STEEL HANDRAIL BRACKET
05 51 00.35 STAINLESS STEEL HANDRAIL POST BRACKET
05 51 00.36 STAINLESS STEEL BAR – 3/4 INCH X 2 INCH
05 51 00.37 STAINLESS STEEL BAR – 1/2 INCH X 1 1/2 INCH

05 51 00.39 STEEL BAR – 1/2 INCH x 1–1/2 INCH
05 51 00.40 STEEL BAR – 3/8 INCH x 3/8 INCH
05 51 00.41 STEEL BAR – 1/2 INCH x 1/2 INCH

05 51 00.43 STEEL TUBE – 1–1/2 INCH X 4 INCH – WITH END CLOSURE PLATES
05 51 00.44 STEEL BAR – 1 INCH X 2 INCH
05 51 00.45 STEEL BAR – 5/8 INCH x 5/8 INCH
05 51 00.46 STEEL BAR – 5/8 INCH DIA.
05 51 00.47 STEEL BAR – 5/8 INCH x 1 INCH
05 51 00.48 STEEL BAR – 1 INCH x 1 INCH
05 51 00.49 STEEL BAR – 1 INCH x 1–1/2 INCH
05 51 00.50 STEEL BAR – 1 1/2 INCH X 1 1/2 INCH

05 51 00.51 STEEL ANGLE LINTEL – REFERENCE STRUCTURAL STEEL SCHEDULE

05 51 00.60 WELD TO STEEL FRAMING
05 51 00.62 STEEL TRIANGLE SUPPORT BRACKET – 2 INCH WIDE x 1/4 INCH THICK @ 18 INCHES O.C. MAX PREDRILLED INSTALLATION @ FASTENING HOLES

05 51 00.70 STEEL PIPE – 1.900 O.D.

05 51 00.80 PREFABRICATED ROOFTOP STAIR

05 51 00.93 STEEL PIPE RAIL POST – EXTERIOR
05 51 00.94 STEEL HANDRAIL BRACKET – EXTERIOR
05 51 00.95 STEEL BAR BALUSTER – 5/8 INCH DIA.– EXTERIOR
05 51 00.96 STEEL PIPE RAIL – 1–1/2 INCH O.D. – EXTERIOR
05 51 00.97 STEEL PIPE GUARDRAIL – 1–1/2 INCH NOM. DIA. – EXTERIOR
05 51 00.98 STEEL PIPE SLEEVE
05 51 00.99 CORE DRILL 4 INCH x 12 INCH DEEP POST PLACEMENT – GROUT SOLID TYPICAL

DIVISION 06 - WOOD PLASTICS AND COMPOSITES

06 10 00 ROUGH CARPENTRY

06 10 00.01 WOOD BLOCKING – (2X) CONTINUOUS – PRESSURE TREATED – ROOF EDGE – SIZE AS NOTED OR DRAWN – STAGGER BOLTED TO ANGLE AT 32 INCHES O.C.
06 10 00.02 WOOD BLOCKING – (2X) CONTINUOUS WITH PLYWOOD SHIMS – PRESSURE TREATED – ROOF EDGE – SIZE AS NOTED OR DRAWN STAGGER BOLTED TO ANGLE AT 32 INCHES O.C.
06 10 00.03 WOOD BLOCKING – (2X) CONTINUOUS – PRESSURE TREATED – ROOF EDGE – SIZE AS NOTED OR DRAWN – STAGGER BOLTED TO ANGLE AT 32 INCHES O.C. – SHIM AS REQUIRED TO BE PLUMB AND LEVEL FROM STEEL
06 10 00.04 WOOD BLOCKING – (2X) CONTINUOUS – PRESSURE TREATED – SIZE AS REQUIRED – ESTABLISH LEVEL INSTALLATION SURFACE FOR ROOFTOP CURB
06 10 00.05 WOOD BLOCKING – (2X) CONTINUOUS – PRESSURE TREATED – LOCKER BASE – SIZE AS NOTED OR DRAWN – BOLT IF REQUIRED FOR ANCHORAGE

06 10 00.11 WOOD BLOCKING – 2X PRESSURE TREATED – SIZE AS NOTED OR DRAWN
06 10 00.12 WOOD BLOCKING – 1X PRESSURE TREATED – SIZE AS NOTED OR DRAWN

06 10 00.21 WOOD BLOCKING – 2X FIRE RETARDANT TREATED – SIZE AS NOTED OR DRAWN
06 10 00.23 WOOD BLOCKING – FIRE RETARDANT TREATED – SIZE AS NOTED OR DRAWN

06 10 00.31 PLYWOOD – 1/4 INCH
06 10 00.32 PLYWOOD – 1/2 INCH
06 10 00.33 PLYWOOD – 5/8 INCH
06 10 00.34 PLYWOOD – 3/4 INCH
06 10 00.35 PLYWOOD – 3/4 INCH CONTINUOUS BETWEEN METAL STUDS – COORDINATE PLACEMENT WITH PROJECTOR SUPPORT REQUIREMENTS
06 10 00.36 PLYWOOD – 3/8 INCH

06 10 00.41 PLYWOOD PRESSURE TREATED – 1/4 INCH
06 10 00.42 PLYWOOD PRESSURE TREATED – 1/2 INCH
06 10 00.43 PLYWOOD PRESSURE TREATED – 5/8 INCH
06 10 00.44 PLYWOOD PRESSURE TREATED – 3/4 INCH

06 10 00.51 WOOD STUD – 2X4 – 16 INCHES O.C. – SHOP WORKSTATION
06 10 00.52 WOOD STUD – 2X6 – 16 INCHES O.C. – SHOP WORKSTATION
06 10 00.53 WOOD TOP PLATE – (2) 2X4 CONTINUOUS – SHOP WORKSTATION
06 10 00.54 WOOD TOP PLATE – (2) 2X6 CONTINUOUS – SHOP WORKSTATION
06 10 00.55 WOOD SOLE PLATE – 2X4 CONTINUOUS – SHOP WORKSTATION
06 10 00.56 WOOD SOLE PLATE – 2X6 CONTINUOUS – PRESSURE TREATED – SHOP WORKSTATION
06 10 00.57 WOOD BOARD – 1X12 – SHOP WORKSTATION
06 10 00.58 WOOD CEILING JOIST – 2X12 – 16 INCHES O.C. – SHOP WORKSTATION

06 10 00.80 2X WOOD STRINGER – FIRE TREATED
06 10 00.82 2X4 PRESSURE TREATED SLEEPERS – 16 INCHES O.C.

06 10 00.90 EXPANSION BOLT
06 10 00.92 INSECT SCREEN

06 20 00 FINISH CARPENTRY

06 20 00.01 HARDWOOD MILLWORK – TRANSPARENT FINISH
06 20 00.02 HARDWOOD TRIM – TRANSPARENT FINISH
06 20 00.03 HARDWOOD TRIM – 3/4 INCH – PENCILED EDGE 1/8 INCH RADIUS – 1–1/2 INCH O.D.
06 20 00.04 HARDWOOD SILL – 3/4 INCH – 1/4 INCH RADIUS EASED EDGE – TRANSPARENT FINISH

06 20 00.21 HARDWOOD TRIM – 1/2 INCH – TRANSPARENT FINISH
06 20 00.22 HARDWOOD TRIM – 1/4 INCH – TRANSPARENT FINISH
06 20 00.23 HARDWOOD TRIM – 3/4 INCH – TRANSPARENT FINISH
06 20 00.24 HARDWOOD TRIM – 1 INCH – TRANSPARENT FINISH
06 20 00.25 HARDWOOD SHELF 1 INCH – TRANSPARENT FINISH
06 20 00.26 HARDWOOD TRIM – 5/4 INCH – TRANSPARENT FINISH

06 20 00.29 HARDWOOD BULLNOSE – TRANSPARENT FINISH

06 20 00.31 HARDWOOD VENEER PLYWOOD – 1/2 INCH – TRANSPARENT FINISH
06 20 00.32 HARDWOOD VENEER PLYWOOD – 5/8 INCH – TRANSPARENT FINISH
06 20 00.33 HARDWOOD VENEER PLYWOOD – 3/4 INCH – TRANSPARENT FINISH
06 20 00.34 HARDWOOD EDGING ON PLYWOOD – TRANSPARENT FINISH

06 20 00.42 PLYWOOD – 1/2 INCH
06 20 00.43 PLYWOOD – 5/8 INCH
06 20 00.44 PLYWOOD – 3/4 INCH
06 20 00.45 OSB PLYWOOD – 3/4 INCH – TRANSPARENT FINISH

06 20 00.51 MDF PLYWOOD – 1/2 INCH
06 20 00.53 MDF PLYWOOD – 3/4 INCH
06 20 00.54 MDF PLYWOOD – 1 INCH

06 20 00.55 MDO PLYWOOD – 3/4 INCH
06 20 00.56 PEGBOARD – 1/4 INCH THICK

06 20 00.60 FLAG HOOK STANDOFF WITH CAP
06 20 00.61 VENTED WALL BASE
06 20 00.62 HARDBOARD STAGE FLOORING
06 20 00.63 FLATHEAD STAINLESS STEEL WOOD SCREW – COUNTERSUNK
06 20 00.64 STAINLESS STEEL DOME HEAD RIVET – DOUBLE SIDED – 7MM CAP
06 20 00.65 BRUSHED STAINLESS FINISH ALUMINUM CHANNEL – 1 INCH
06 20 00.66 CLEAT HANGER
06 20 00.67 BRUSHED STAINLESS FINISH ALUMINUM OUTSIDE CORNER TRIM – 3/8 UNCH EXPOSED FACE.

06 20 00.71 STAINLESS STEEL SCREWS – COUNTERSUNK
06 20 00.72 STAINLESS STEEL SCREWS – WITH FINISH WASHERS
06 20 00.73 STAINLESS STEEL BOLTS – NUTS AND WASHERS – 1/2 INCH DIA
06 20 00.74 STAINLESS STEEL INFILL PANEL TYPE 1
06 20 00.76 STAINLESS STEEL TURNBUCKLE
06 20 00.77 LOCK
06 20 00.78 HINGE
06 20 00.79 RECYCLING BIN – PROVIDED BY FFE

06 20 00.80 STEEL UNDER COUNTER SUPPORT BRACKET – SIZE AS NOTED OR DRAWN

06 20 00.81 PLASTIC LAMINATE COUNTER TOP
06 20 00.82 PLASTIC LAMINATE BACKSPLASH – 4 INCH
06 20 00.83 PLASTIC LAMINATE
06 20 00.84 GROMMET – 3 INCH – PLASTIC
06 20 00.85 SHELVING BRACKET
06 20 00.86 WIRE MANAGEMENT HOOKS –12 INCHES O.C. – UNDER COUNTER
06 20 00.87 EDGE LIT GLAZING CHANNEL – COORDINATE WITH ELECTRICAL
06 20 00.88 CUP CABINET DOOR HINGES – 12 INCHES O.C. MAX

06 20 00.90 HARDWOOD TREAD AND RISER TO MATCH STAGE FLOOR – TRANSPARENT FINISH
06 20 00.91 HARDWOOD HANDRAIL – TRANSPARENT FINISH

06 20 00.97 WOOD SLEEPERS – SIZE AS REQUIRED
06 20 00.98 WOOD BLOCKING – FIRE RETARDANT TREATED – SIZE AS REQUIRED
06 20 00.99 WOOD BLOCKING – SIZE AS REQUIRED

06 40 00 ARCHITECTURAL WOODWORK

06 40 00.01 ADMINISTRATION CIRCULATION DESK
06 40 00.02 MAILBOX UNITS
06 40 00.03 LIBRARY CIRCULATION DESK
06 40 00.04 LIBRARY COMPUTER DESK
06 40 00.05 DISPLAY CASE

06 40 00.11 3D WOOD WALL PANELS – MAPLE

06 40 00.14 PLASTIC LAMINATE
06 40 00.15 TACKABLE SURFACE
06 40 00.16 ALUMINUM EXTRUSION TRIM – TACK WALL SURFACE

06 40 00.20 HARDWOOD TRIM – TRANSPARENT FINISH – SIZE AS DRAWN
06 40 00.21 HARDWOOD TRIM – 1/2 INCH – TRANSPARENT FINISH
06 40 00.22 HARDWOOD TRIM – 3/4 INCH – TRANSPARENT FINISH
06 40 00.23 HARDWOOD TRIM – 1 INCH – TRANSPARENT FINISH

06 40 00.25 HARDWOOD TRIM – 3/4 INCH – PENCILED EDGE 1/8 INCH RADIUS – TRANSPARENT FINISH

06 40 00.31 HARDWOOD VENEER PLYWOOD – 1/2 INCH – TRANSPARENT FINISH
06 40 00.32 HARDWOOD VENEER PLYWOOD – 3/4 INCH – TRANSPARENT FINISH
06 40 00.33 HARDWOOD VENEER PLYWOOD – 1 INCH – TRANSPARENT FINISH

06 40 00.35 HARDWOOD EDGING ON PLYWOOD – TRANSPARENT FINISH

06 40 00.41 PLYWOOD – 1/2 INCH
06 40 00.42 PLYWOOD – 3/4 INCH

06 40 00.52 HARDWOOD EDGE TRIM – TRANSPARENT FINISH

06 40 00.61 WOOD BLOCKING – 2X
06 40 00.62 WOOD BLOCKING – SIZE AS REQUIRED

06 40 00.65 BRUSHED STAINLESS FINISH ALUMINUM CHANNEL – 1 INCH
06 40 00.67 BRUSHED STAINLESS FINISH ALUMINUM OUTSIDE CORNER TRIM – 3/8 UNCH EXPOSED FACE.

06 40 00.71 LOCK
06 40 00.72 CABINET DOOR
06 40 00.73 DOUBLE ACTION SPRING HINGE
06 40 00.74 HINGE
06 40 00.75 STAINLESS STEEL BAR RAIL AND POSTS
06 40 00.77 METAL GLAZING CHANNEL
06 40 00.78 WIRE PULL
06 40 00.79 CARD HOLDER – RECTANGULAR – 1–1/8" x 3–1/8"

06 40 00.81 SLIDING GLASS DOORS – SET IN ALUMINUM TRACKS – PROVIDE LOCKS
06 40 00.82 ADJUSTABLE SHELVING STANDARDS AND BRACKETS
06 40 00.84 GLASS SHELVING AND BRACKETS

06 40 00.85 PORCELAIN ENAMEL, CHALK SURFACE – SELF ADHERING – COLOR BLACK

06 40 00.89 GLASS SHELF – 3/8 INCH THICK TEMPERED – SIZE AS NOTED/DRAWN

06 40 00.90 CABLE DISPLAY SYSTEM – SATIN FINISH
06 40 00.91 CABLE – 1/8 INCH THICK WITH TENSIONER
06 40 00.92 CABLE FIXING – FLOOR TO CEILING MOUNT
06 40 00.93 FIXING SHELF SUPPORT – SIDE SHELF FIXING CLAMPS FOR 3/8 INCH GLASS SHELVES
06 40 00.94 GLASS SHELF – 14 INCH X 24 INCH X 3/8 INCH TEMPERED GLASS SHELF
06 40 00.95 GLASS DOOR WITH PIVOT HINGE – 2'–2"W X 5'–3"H
06 40 00.96 ACCESS PANEL
06 40 00.97 3 INCH GROMMET – PLASTIC
06 40 00.98 WIRE MANAGEMENT HOOKS – 12 INCHES O.C. – UNDER COUNTER
06 40 00.99 UNDER COUNTER STEEL SUPPORT WITH PRE–DRILLED HOLES

06 55 00 SOLID SURFACING

06 55 00.01 SOLID SURFACE MATERIAL
06 55 00.02 SEALANT
06 55 00.03 PLYWOOD BACKING
06 55 00.04 ADHESIVE
06 55 00.05 Z–CLIPS SECURED TO BLOCKING AND SOLID SURFACING
06 55 00.06 GROMMET – 3 INCH – PLASTIC
06 55 00.07 STAINLESS STEEL TRASH GROMMET – 12 INCH

DIVISION 07 - THERMAL AND MOISTURE PROTECTION

07 13 53 ELASTOMERIC SHEET WATERPROOFING

07 13 53.01 ADHERED VERTICAL WATERPROOFING
07 13 53.02 BELOW–SLAB HORIZONTAL WATERPROOFING

07 13 53.11 DRAINAGE COMPOSITE BOARD

07 16 13 POLYMER MODIFIED CEMENT WATERPROOFING

07 16 13.01 POLYMER MODIFIED CEMENT WATERPROOFING MATERIAL

07 21 00 THERMAL INSULATION

07 21 00.01 RIGID INSULATION – 2 INCH – FOUNDATION ONLY
07 21 00.02 RIGID INSULATION – 2 INCH – UNDER SLAB – HIGH COMPRESSIVE STRENGTH

07 21 00.11 INSULATING NAIL BASE – 2 INCH – EXTERIOR WALL

07 21 00.20 GLASS FIBER INSULATION
07 21 00.21 GLASS FIBER ACOUSTICAL BLANKET INSULATION – 6 INCH – UNFACED
07 21 00.22 GLASS FIBER ACOUSTICAL BLANKET INSULATION – 3 1/2 INCH – UNFACED

07 21 00.29 GLASS FIBER ACOUSTICAL BLANKET INSULATION – MATCH DEPTH OF STUD – UNFACED

07 21 00.30 MINERAL FIBER INSULATION
07 21 00.31 MINERAL FIBER ACOUSTICAL INSULATION – 6 INCH
07 21 00.32 MINERAL FIBER ACOUSTICAL INSULATION – 3 1/2 INCH

07 21 00.39 MINERAL FIBER ACOUSTICAL INSULATION – MATCH DEPTH OF STUD – UNFACED

07 21 00.40 FOAMED IN PLACE INSULATION / AIR BARRIER

07 21 00.50 BACKER ROD AND SEALANT – TYPE AS REQUIRED

07 21 31 CLOSED-CELL SPRAYED FOAM INSULATION

07 21 31.02 FOAM INSULATION – SPRAYED–IN–PLACE – 1–1/2 INCH DEPTH BETWEEN STUDS

07 24 20 EXTERIOR FINISH SYSTEM (EFS)

07 24 20.01 EXTERIOR FINISH – TYPE AND COLOR SELECTED BY ARCHITECT
07 24 20.11 1/2 INCH EXTERIOR GRADE SHEATHING
07 24 20.12 CONTROL JOINT
07 24 20.13 BACKER ROD AND SEALANT – TYPE AS REQUIRED
07 24 20.14 ALUMINUM SOFFIT VENT

07 26 00 VAPOR RETARDERS

07 26 00.01 VAPOR RETARDER – UNDER SLAB
07 26 00.02 FOAMED–IN–PLACE INSULATION WITH BACKER ROD AS REQUIRED
07 26 00.03 VAPOR RETARDER – UNDER STAGE FLOORING
07 26 00.04 VAPOR RETARDER – TAPE SEAMS

07 27 13 MODIFIED BITUMINOUS SHEET AIR BARRIER

07 27 13.01 AIR/VAPOR BARRIER MEMBRANE – SELF–ADHERING
07 27 13.02 AIR/VAPOR BARRIER MEMBRANE – SELF–ADHERING – 2 LAYERS
07 27 13.05 AIR/VAPOR BARRIER TRANSITION MEMBRANE – SELF–ADHERING

07 27 13.10 WATERPROOF MEMBRANE FLASHING

07 27 13.20 PREFINISHED ALUMINUM FLASHING
07 27 13.21 GALVANIZED SHEET METAL FLASHING
07 27 13.22 FASTENER

07 46 46 MINERAL FIBER CEMENT SIDING

07 46 46.01 MINERAL FIBER CEMENT SIDING PANEL
07 46 46.02 MINERAL FIBER CEMENT SMOOTH PANEL

07 46 46.10 DRAINAGE MAT
07 46 46.11 STARTER TRACK/STRIP
07 46 46.12 CLIP
07 46 46.13 SPACER

07 46 46.21 FLASHING
07 46 46.22 SEALANT
07 46 46.23 SEALANT – CUSTOM COLOR TO MATCH PANEL

07 46 46.31 OPEN OUTSIDE CORNER TRIM
07 46 46.32 SINGLE FLANGE SEALANT BACKER
07 46 46.33 DOUBLE FLANGE SEALANT BACKER
07 46 46.34 INSIDE CORNER TRIM
07 46 46.35 BEAD REVEAL TRIM

07 54 19 POLYVINYL CHLORIDE (PVC) ROOFING

07 54 19.01 PVC SINGLE PLY MEMBRANE ROOFING
07 54 19.02 HIGH DENSITY POLYISO RECOVERY BOARD
07 54 19.03 POLYISO RIGID INSULATION
07 54 19.04 POLYISO TAPERED INSULATION
07 54 19.05 FLASHING MEMBRANE
07 54 19.06 BASE FLASHING
07 54 19.08 FIBERGLASS MAT FACED GYPSUM RECOVERY BOARD
07 54 19.09 SHEET VAPOR RETARDER – TAPE SEAMS

07 54 19.10 FLAT SECUREMENT BARS
07 54 19.11 WIND UPLIFT SECUREMENT BARS
07 54 19.12 BLIND NAILER
07 54 19.13 MULTI–PURPOSE TAPE
07 54 19.14 STAINLESS STEEL HOSE CLAMP

07 54 19.20 PVC EXPANSION JOINT
07 54 19.21 FOAM ROD TUBING – CONTINUOUS

07 54 19.80 WALKWAY PADS
07 54 19.81 ROOF EDGE SCUPPER

07 54 19.90 ADHESIVE
07 54 19.91 SEALANT – CONTINUOUS
07 54 19.92 HOT–AIR WELD

07 62 00 SHEET METAL FLASHING AND TRIM

07 62 00.01 SHEET METAL FLASHING
07 62 00.02 SHEET METAL COUNTER FLASHING
07 62 00.03 SPRING LOCK FLASHING
07 62 00.04 FLASHING REGLET

07 62 00.10 METAL COPING
07 62 00.11 PRE–FINISHED ALUMINUM FLASHING – CUSTOM COLOR

07 62 00.20 SEALANT – TYPE AS REQUIRED

07 62 00.30 GUTTER
07 62 00.31 DOWNSPOUT
07 62 00.32 SPLASH BLOCK – PLACE WALKWAY PAD UNDER

07 62 00.40 SHEET METAL COLLAR
07 62 00.41 SHEET METAL RAIN HOOD

07 71 00 ROOF SPECIALTIES

07 71 00.01 FACTORY FABRICATED FASCIA TRIM/ROOF EDGE – CUSTOM COLOR
07 71 00.02 EXPOSED ALUMINUM FINISH METAL – CUSTOM COLOR
07 71 00.03 ALUMINUM DRIP EDGE – CUSTOM COLOR
07 71 00.04 FACTORY FABRICATED PARAPET WALL COPING – CUSTOM COLOR

07 71 00.10 SOFFIT STRIP VENT

07 71 00.20 CONTINUOUS SEALANT – TYPE AS REQUIRED

07 72 00 ROOF ACCESSORIES

07 72 00.01 ROOF SCUTTLE – TYPE 1 – 3'–0" x 3'–0"
07 72 00.02 ROOF SCUTTLE – TYPE 2 – 3'–0" x 4'–6"

07 72 00.10 NEOPRENE GASKET ENTIRE PERIMETER TYP.
07 72 00.11 RIGID INSULATION
07 72 00.12 SPRING LATCH W/ HANDLE AND PADLOCK HASP ON INSIDE
07 72 00.13 PADLOCK HASP

07 72 00.20 ELEVATOR PENTHOUSE STRUCTURE

07 72 00.30 12 GA. ALUM. ROOF
07 72 00.31 STORM PROOF LOUVER BLADE
07 72

09 30 13 CERAMIC TILING

09 30 13.01 CERAMIC FLOOR TILE
09 30 13.02 CERAMIC TILE BASE
09 30 13.11 CERAMIC WALL TILE
09 30 13.31 MARBLE THRESHOLD
09 30 13.41 THIN SET TILE SETTING BED – ON GRADE
09 30 13.42 THIN SET TILE SETTING BED – ON DECK
09 30 13.43 THICK SET TILE SETTING BED
09 30 13.51 CEMENTITIOUS BACKING BOARD

09 30 16 QUARRY TILING

09 30 16.01 QUARRY TILE
09 30 16.02 QUARRY TILE BASE
09 30 16.31 ALUMINUM TRANSITION STRIP
09 30 16.41 THICK SET TILE SETTING BED

09 30 19 PAVER TILING

09 30 19.02 PORCELAIN WALL TILE
09 30 19.31 PORCELAIN WALL TILE – 6 x 24 CUT TILE
09 30 19.33 PORCELAIN WALL TILE – 12 x 24
09 30 19.41 THIN SET TILE SETTING BED
09 30 19.51 CEMENTITIOUS BACKING BOARD
09 30 19.61 ALUMINUM CORNER TRIM
09 30 19.62 ALUMINUM CAP TRIM

09 51 00 ACOUSTICAL CEILINGS

09 51 00.01 ACT TYPE-1
09 51 00.02 ACT TYPE-2
09 51 00.03 ACT TYPE-3
09 51 00.04 ACT TYPE-4
09 51 00.05 ACT TYPE-5
09 51 00.06 ACT TYPE-6
09 51 00.11 WOOD SLAT CEILING TYPE-W1
09 51 00.12 WOOD SLAT CEILING TYPE-W2
09 51 00.15 WOOD GRILLE PANEL SLAT
09 51 00.16 WOOD PERIMETER TRIM – 1/2 X 5-1/4
09 51 00.51 ACT SUSPENSION SYSTEM
09 51 00.52 PERIMETER EDGE TRIM SYSTEM
09 51 00.53 RETENTION CLIPS
09 51 00.97 ACOUSTICAL CLOUD – REFERENCE REFLECTED CEILING PLANS FOR TYPE AND HEIGHT
09 51 00.98 WOOD VENEER CEILING SYSTEM – REFERENCE REFLECTED CEILING PLANS FOR TYPE AND HEIGHT
09 51 00.99 ACOUSTICAL CEILING – REFERENCE REFLECTED CEILING PLANS FOR TYPE AND HEIGHT

09 64 29 WOOD STRIP AND PLANK FLOORING

09 64 29.01 WOOD STRIP AND PLANK FLOOR
09 64 29.11 HARDWOOD TRIM – 1" x 8" WITH BULLNOSE
09 64 29.12 WOOD BLOCKING – SIZE AS REQUIRED
09 64 29.21 PLYWOOD UNDERLAYMENT – 5/8 INCH
09 64 29.22 SLEEPERS AND SHIMS
09 64 29.23 VAPOR RETARDER

09 64 66 WOOD ATHLETIC FLOORING

09 64 66.01 WOOD ATHLETIC FLOOR
09 64 66.02 RUBBER COVE WALL BASE – VENTED
09 64 66.03 VAPOR RETARDER
09 64 66.05 GAME LINES – COURT MARKINGS – PAINTED
09 64 66.06 LOGO – PAINTED
09 64 66.07 STENCIL LETTERING – PAINTED

09 65 13 RESILIENT BASE AND ACCESSORIES

09 65 13.01 RUBBER BASE – 4"
09 65 13.02 RUBBER BASE – 2"

09 65 16 RESILIENT SHEET FLOORING

09 65 16.01 RESILIENT SHEET VINYL FLOORING
09 65 16.11 TRANSITION STRIP

09 65 19 RESILIENT TILE FLOORING

09 65 19.01 VINYL COMPOSITION TILE
09 65 19.11 TRANSITION STRIP

09 65 23 RUBBER FLOORING

09 65 23.01 RUBBER FLOOR TILE – RAISED STUD PROFILE – STAIR TREADS/RISERS AND LANDINGS
09 65 23.02 RUBBER FLOOR TILE – HAMMERED PROFILE
09 65 23.03 RUBBER FLOOR TILE – ATHLETIC
09 65 23.11 TRANSITION STRIP

09 65 36 STATIC-CONTROL RESILIENT FLOORING

09 65 36.01 STATIC-CONTROL COMPOSITE TILE

09 65 43 LINOLEUM FLOORING

09 65 43.01 LINOLEUM SHEET FLOORING
09 65 43.11 TRANSITION STRIP

09 66 23 RESINOUS MATRIX TERRAZZO FLOORING

09 66 23.01 RESINOUS MATRIX TERRAZZO FLOORING

09 67 33 THIN-FILM EPOXY FLOORING SYSTEM

09 67 33.01 THIN-FILM EPOXY FLOOR

09 68 00 CARPETING

09 68 00.01 CARPET
09 68 00.02 CARPET BORDER
09 68 00.11 RUBBER CARPET REDUCING STRIP
09 68 00.12 METAL CARPET REDUCING STRIP
09 68 00.13 VINYL STAIR NOSING
09 68 00.14 ROUND EDGING
09 68 00.15 RUBBER STAIR TREAD NOSING

09 72 00 WALL COVERINGS

09 72 00.01 VINYL WALL COVERING

09 84 00 ACOUSTICAL ROOM COMPONENTS

09 84 00.01 ACOUSTICAL PANEL – WALL MOUNTED – TYPE 1
09 84 00.02 ACOUSTICAL PANEL – WALL MOUNTED – TYPE 2
09 84 00.03 ACOUSTICAL PANEL – WALL MOUNTED – TYPE 3
09 84 00.04 ACOUSTICAL PANEL – WALL MOUNTED – TYPE 4
09 84 00.05 ACOUSTICAL PYRAMID PANEL – CEILING MOUNTED – TYPE 5
09 84 00.06 ACOUSTICAL PANEL – CEILING HUNG – TYPE 6
09 84 00.99 CONCEALED "Z" CLIP MOUNTING SYSTEM

09 91 00 PAINTING

09 91 00.01 PAINT – SEE SCHEDULE
09 91 00.10 DRY ERASE PAINT
09 91 00.12 METALLIC PAINT

09 96 00 HIGH-PERFORMANCE COATINGS

09 96 00.01 HIGH PERFORMANCE COATING – SEE SCHEDULE

DIVISION 10 - SPECIALTIES

10 11 16 MARKER BOARDS

10 11 16.01 DRY MARKER BOARD
10 11 16.02 DRY MARKER BOARD / TACK BOARD
10 11 16.03 MENU BOARD
10 11 16.04 VERTICAL SLIDING MARKER BOARD
10 11 16.11 TACK BOARD
10 11 16.12 2 INCH TACK BOARD STRIP
10 11 16.19 TACK BOARD WALL
10 11 16.21 DRY ERASE H-BAR SPLICE
10 11 16.31 SILK SCREEN – MUSIC STAFF LINING
10 11 16.41 OMIT MARKER TRAY FROM MARKER BOARD

10 12 00 DISPLAY CASES

10 12 00.01 DISPLAY CASE – TYPE 1
10 12 00.02 DISPLAY CASE – TYPE 2
10 12 00.03 DISPLAY CASE – TYPE 3
10 12 00.04 DISPLAY CASE – TYPE 4
10 12 00.05 DISPLAY CASE – TYPE 5

10 14 00 SIGNAGE

10 14 00.01 INTERIOR SIGNAGE – TYPE AS SCHEDULED
10 14 00.02 INTERIOR SIGNAGE – METAL LETTERS
10 14 00.10 STANDOFF HARDWARE
10 14 00.21 ALUMINUM EXTERIOR SIGN – TWO SIDED
10 14 00.23 EXTERIOR SIGNAGE – TYPE AS SCHEDULED
10 14 00.30 WALL MOUNTING BRACKET
10 14 00.31 EXPANSION BOLT
10 14 00.40 FABRIC BANNER – INTERIOR
10 14 00.41 FABRIC BANNER – EXTERIOR

10 21 13 TOILET COMPARTMENTS

10 21 13.01 TOILET COMPARTMENT
10 21 13.11 TOILET PARTITION – PANEL
10 21 13.12 TOILET PARTITION – POST – FLOOR TO CEILING
10 21 13.13 TOILET PARTITION – WALL BRACKET
10 21 13.21 TOILET COMPARTMENT DOOR – 36 INCH
10 21 13.22 TOILET COMPARTMENT DOOR – 28 INCH
10 21 13.31 URINAL SCREEN
10 21 13.41 PRIVACY PARTITION – 30 INCHES WIDE x 48 INCHES TALL – MOUNT 24 INCHES ABOVE FINISH FLOOR

10 22 15 FIXED GLASS PANEL PARTITIONS

10 22 15.01 INTERIOR GLASS WALL SYSTEM
10 22 15.11 FIXED GLASS PANEL
10 22 15.12 SLIDING GLASS DOOR
10 22 15.21 ALUMINUM TRACK

10 22 26 OPERABLE GLASS PARTITIONS

10 22 26.01 INTERIOR OPERABLE GLASS PARTITION PANEL
10 22 26.02 EXTERIOR OPERABLE GLASS PARTITION PANEL
10 22 26.11 OPERABLE GLASS PARTITION PANEL TRACK ASSEMBLY

10 22 28 FOLDING PANEL PARTITIONS

10 22 28.01 FOLDING PANEL PARTITION
10 22 28.02 FOLDING PANEL PARTITION DOOR
10 22 28.03 FOLDING PANEL PARTITION MARKERBOARD
10 22 28.11 MOTORIZED FOLDING PANEL PARTITION

10 28 13 TOILET ACCESSORIES

10 28 13.01 TOILET ACCESSORY – SEE SCHEDULE
10 28 13.10 COAT HOOK
10 28 13.11 PAPER TOWEL DISPENSER
10 28 13.12 SOAP DISPENSER
10 28 13.13 HAND SANITIZER DISPENSER
10 28 13.14 BABY CHANGING STATION
10 28 13.20 ELECTRIC HAND DRYER

10 44 00 FIRE PROTECTION SPECIALTIES

10 44 00.01 FIRE EXTINGUISHER CABINET – FULLY RECESSED
10 44 00.02 FIRE EXTINGUISHER AND BLANKET CABINET – FULLY RECESSED
10 44 00.03 FIRE EXTINGUISHER WALL MOUNTED BRACKET
10 44 00.11 FIRE EXTINGUISHER
10 44 00.12 FIRE BLANKET
10 44 00.21 EMERGENCY KEY CABINET
10 44 00.31 FIRST AID KIT – WALL MOUNTED

10 51 13 METAL LOCKERS

10 51 13.01 METAL LOCKER – SLOPED TOP – TYPE 1
10 51 13.02 METAL LOCKER – SLOPED TOP – TYPE 2
10 51 13.03 METAL LOCKER – SLOPED TOP – TYPE 3
10 51 13.10 METAL FILLER PANEL – EACH SIDE OF LOCKER BANK TO CENTER LOCKERS IN OPENING
10 51 13.11 LOCKER ROOM BENCH
10 51 13.13 LOCKER TRIM

10 51 23 PHENOLIC LOCKERS

10 51 23.01 PHENOLIC LOCKER – RECESSED – TYPE 1
10 51 23.11 SHIM

10 71 13 EXTERIOR SUN CONTROL DEVICES

10 71 13.01 ALUMINUM SUNSHADE ASSEMBLY
10 71 13.10 ALUMINUM SUNSHADE OUTRIGGER
10 71 13.11 ALUMINUM SUNSHADE MULLION CLIP
10 71 13.20 FASTENER – AS REQUIRED
10 71 13.99 SEALANT – TYPE AS REQUIRED

DIVISION 11 - EQUIPMENT

11 13 00 LOADING DOCK EQUIPMENT

11 13 00.01 DOCK BUMPERS
11 13 00.02 RUBBER CORNER GUARD

11 31 00 RESIDENTIAL APPLIANCES

11 31 00.01 REFRIGERATOR
11 31 00.02 REFRIGERATOR – UNDER-COUNTER
11 31 00.11 DISHWASHER – UNDER-COUNTER
11 31 00.21 WASHER
11 31 00.22 DRYER
11 31 00.23 STORAGE DRAWER PEDESTAL
11 31 00.25 HEAVY-DUTY WASHER
11 31 00.26 HEAVY-DUTY DRYER
11 31 00.41 WALL OVEN – BUILT-IN – ELECTRIC
11 31 00.42 IN COUNTER COOKTOP – ELECTRIC
11 31 00.44 RANGE HOOD

11 40 00 FOODSERVICE EQUIPMENT

11 40 00.01 FOODSERVICE EQUIPMENT – SEE FOODSERVICE SPECIFICATION AND DRAWINGS
11 40 00.11 EXHAUST VENTILATOR – REFER TO FOODSERVICE EQUIPMENT DRAWINGS AND SPECIFICATIONS
11 40 00.12 CLOSURE PANEL BY KITCHEN EQUIPMENT CONTRACTOR
11 40 00.21 STAINLESS STEEL MOBILE PREP TABLE – 4'-0" x 6'-0"

11 52 13 PROJECTION SCREENS

11 52 13.01 PROJECTION SCREEN – TYPE 1 – AUDITORIUM
11 52 13.02 PROJECTION SCREEN – TYPE 2 – CAFETERIA
11 52 13.03 PROJECTION SCREEN – TYPE 3 – BAND
11 52 13.10 PROJECTOR LIFT

11 53 00 LABORATORY EQUIPMENT

11 53 00.01 ACID STORAGE CABINET – BENCH TOP
11 53 00.02 FLAMMABLE STORAGE CABINET – BENCH TOP
11 53 00.11 GLASSWARE PEGBOARD
11 53 00.21 SAFETY GOGGLE CABINET

11 61 00 THEATER AND STAGE EQUIPMENT

11 61 00.01 DIMMING RACK
11 61 00.02 DIMMING CONSOLE
11 61 00.03 LIGHTING CONSOLE
11 61 00.04 STAGE MANAGER PANEL
11 61 00.05 TORM LADDER
11 61 00.06 STAGE RIGGING
11 61 00.07 CURTAIN – MAIN VALANCE
11 61 00.08 CURTAIN – MAIN TRAVELER
11 61 00.09 CURTAIN – BORDER
11 61 00.10 CURTAIN – LEG
11 61 00.11 CURTAIN – TRAVELER
11 61 00.12 CURTAIN – CYCLORAMA
11 61 00.13 CURTAIN – SIDE TABS
11 61 00.20 PIPE GRID
11 61 00.21 CURATIN ASSEMBLY
11 61 00.22 STEEL ANGLES WITH PRE-PUNCHED HOLES – SIZE AND GAGE AS REQUIRED
11 61 00.23 STAINLESS STEEL ROD – 3/16 INCH DIAMETER
11 61 00.24 STAINLESS STEEL BOLT AND WASHERS

11 66 23 GYMNASIUM EQUIPMENT

11 66 23.01 WALL PADDING – TYPE 1
11 66 23.02 WALL PADDING – TYPE 2
11 66 23.03 WALL PADDING – TYPE 3
11 66 23.11 VOLLEYBALL STANDARD FLOOR INSERT
11 66 23.21 MAT HOIST – TYPE 1

11 66 24 BASKETBALL GYM EQUIPMENT

11 66 24.01 BACKSTOP – FORWARD FOLDING – ADJUSTABLE CEILING MOUNTED – ELECTRIC OPERATED
11 66 24.02 BACKSTOP – SIDE FOLDING – ADJUSTABLE CEILING MOUNTED – ELECTRIC OPERATED
11 66 24.21 BACKBOARD – GLASS – OFFICIAL 72 x 48 – SAFETY PADDING

11 66 53 GYMNASIUM DIVIDERS

11 66 53.01 ROLL-FOLD DIVIDER CURTAIN – OVERHEAD SUPPORTED
11 66 53.11 DIVIDER CURTAIN MOTOR

DIVISION 12 - FURNISHINGS

12 24 00 WINDOW SHADES

12 24 00.01 ROLLER SHADE
12 24 00.02 ROLLER SHADE – ELECTRICALLY OPERATED
12 24 00.11 BLACKOUT SHADE
12 24 00.12 BLACKOUT SHADE – ELECTRICALLY OPERATED
12 24 00.21 DUAL ROLLER SHADES

12 30 00 CASEWORK

12 30 00.01 BASE CABINET
12 30 00.02 WALL CABINET
12 30 00.03 TALL CABINET
12 30 00.10 LOCKING NARCOTICS CABINET
12 30 00.20 PLASTIC LAMINATE COUNTERTOP
12 30 00.21 PLASTIC LAMINATE BACKSPLASH – 4 INCH
12 30 00.22 PVC EDGE BANDING
12 30 00.23 PLASTIC LAMINATE BACKSPLASH – 6 INCH
12 30 00.24 PLASTIC LAMINATE BACKSPLASH – 8 INCH
12 30 00.25 PLASTIC LAMINATE COUNTERTOP – HIGH WEAR
12 30 00.28 STAINLESS STEEL COUNTERTOP
12 30 00.29 STAINLESS STEEL COUNTERTOP AND BACKSPLASH-SIZE AS NOTED
12 30 00.30 GROMMET – 3 INCH – PLASTIC
12 30 00.31 STEEL UNDER COUNTER SUPPORT BRACKET – SIZE AS NOTED OR DRAWN
12 30 00.32 LOCK
12 30 00.40 APRON HOOKS
12 30 00.50 FILLER PIECE SCRIBED TO ADJACENT SURFACE – FINISH TO MATCH CASEWORK
12 30 00.60 4" WOOD VALANCE-CONTINUOUS – FINISH TO MATCH CASEWORK
12 30 00.61 WOOD END PANEL – FINISH TO MATCH CASEWORK
12 30 00.65 RESIN LABORATORY COUNTERTOP AND BACKSPLASH
12 30 00.66 RESIN LABORATORY SHELF
12 30 00.71 QUARTZ COUNTERTOP AND BACKSPLASH
12 30 00.80 SEALANT
12 30 00.90 FASTENER
12 30 00.99 CASEWORK – REFERENCE INTERIOR ELEVATIONS TYPE

12 35 51 MUSICAL INSTRUMENT STORAGE CASEWORK

12 35 51.10 MUSIC LIBRARY STORAGE SYSTEM

12 48 13 ENTRANCE FLOOR MATS AND FRAMES

12 48 13.01 RECESSED ENTRANCE MAT – REFERENCE DRAWINGS FOR SIZE
12 48 13.10 EXTRUDED ALUMINUM RECESSED FRAMING – L SHAPE

12 61 00 FIXED AUDIENCE SEATING

12 61 00.01 FIXED AUDIENCE SEAT
12 61 00.02 FIXED AUDIENCE SEAT WITH LIGHT UNDER ARMREST
12 61 00.03 FIXED AUDIENCE SEAT – ADA ACCESSIBLE ARMLESS SEAT

12 66 13 TELESCOPING BLEACHERS

12 66 13.01 TELESCOPING POWER ASSISTED WOOD BLEACHERS
12 66 13.03 PORTABLE TELESCOPING MANUAL WOOD BLEACHERS
12 66 13.11 END-CLOSURE CURTAINS
12 66 13.12 MEDIA PLATFORM

DIVISION 13 - SPECIAL CONSTRUCTION

13 00 00 NOT USED

13 00 00.01 NOT USED

DIVISION 14 - CONVEYING SYSTEM

14 21 23 COMPACT TRACTION ELEVATORS

14 21 23.01 ELEVATOR – TYPE 1 – SEE SPECIFICATION
14 21 23.02 ELEVATOR – TYPE 2 – SEE SPECIFICATION
14 21 23.03 ELEVATOR – TYPE 3 – SEE SPECIFICATION
14 21 23.05 ELEVATOR CONTROLLER
14 21 23.11 ELEVATOR CAB
14 21 23.12 ELEVATOR PLATFORM
14 21 23.13 ELEVATOR SILL
14 21 23.14 ELEVATOR DOOR FRAME
14 21 23.15 ELEVATOR DOORS
14 21 23.16 ELEVATOR DOOR GUIDE
14 21 23.17 ELEVATOR GUIDE RAILS AND BRACKETS
14 21 23.18 ELEVATOR PIT LADDER
14 21 23.21 STEEL SILL GUARDS
14 21 23.22 SHIM

DIVISION 15 - RESERVED

15 00 00 NOT USED

15 00 00.01 NOT USED

DIVISION 16 - RESERVED

16 00 00 NOT USED

16 00 00.01 NOT USED

DIVISION 17 - RESERVED

17 00 00 NOT USED

17 00 00.01 NOT USED

DIVISION 18 - RESERVED

18 00 00 NOT USED

18 00 00.01 NOT USED

DIVISION 19 - RESERVED

19 00 00 NOT USED

19 00 00.01 NOT USED

DIVISION 20 - RESERVED

20 00 00 NOT USED

20 00 00.01 NOT USED

DIVISION 21 - FIRE SUPPRESSION

21 00 00 FIRE SUPPRESSION

21 00 00.01 SPRINKLER HEAD – PENDANT
21 00 00.02 SPRINKLER HEAD – UPRIGHT
21 00 00.03 SPRINKLER HEAD – RECESSED
21 00 00.04 SPRINKLER HEAD – SIDEWALL
21 00 00.05 FIRE STANDPIPE
21 00 00.06 SPRINKLER PIPE
21 00 00.07 FIRE DEPARTMENT VALVE / CABINET
21 00 00.08 FIRE DEPARTMENT VALVE
21 00 00.09 FIRE DEPARTMENT CONNECTION
21 00 00.10 VALVE AND EXTINGUISHER CABINET

DIVISION 22 - PLUMBING

22 00 00 PLUMBING

22 00 00.01 SINK – SEE PLUMBING
22 00 00.02 LAVATORY – SEE PLUMBING
22 00 00.03 WATER FOUNTAIN – SEE PLUMBING
22 00 00.04 ELECTRIC WATER COOLER – SEE PLUMBING
22 00 00.05 WATER CLOSET – SEE PLUMBING
22 00 00.06 URINAL – SEE PLUMBING
22 00 00.07 SHOWER – SEE PLUMBING
22 00 00.08 MOP RECEPTOR – SEE PLUMBING
22 00 00.09 HOSE REEL ASSEMBLY – SEE PLUMBING
22 00 00.10 HOSE BIB – SEE PLUMBING
22 00 00.11 MOP SINK – SEE PLUMBING
22 00 00.12 HYDRATION STATION – SEE PLUMBING
22 00 00.15 COMPRESSED AIR SUPPLY VALVE – SEE PLUMBING
22 00 00.20 ROOF DRAIN ASSEMBLY – SEE PLUMBING
22 00 00.21 FLOOR DRAIN – SEE PLUMBING
22 00 00.22 DRAIN PIPE – SEE PLUMBING
22 00 00.23 AREA DRAIN – SEE PLUMBING
22 00 00.24 TRENCH DRAIN – SEE PLUMBING
22 00 00.30 PIPE INSULATION – SEE PLUMBING
22 00 00.35 RAIN WATER LEADER – SEE PLUMBING
22 00 00.40 FREEZE PROOF WALL HYDRANT – SEE PLUMBING
22 00 00.50 PIPE PENETRATION – SEE PLUMBING
22 00 00.60 PIPE – SEE PLUMBING
22 00 00.70 EMERGENCY EYEWASH/SHOWER STATION
22 00 00.71 EMERGENCY UTILITY CONTROLLER
22 00 00.80 GAS METER – SEE PLUMBING
22 00 00.98 SHOWER HEAD & FAUCET – SEE PLUMBING
22 00 00.99 RESIDENTIAL SHOWER / TUB – SEE PLUMBING

DIVISION 23 - HEATING, VENTILATING AND AIR CONDITIONING

23 00 00 HEATING, VENTILATING, AND AIR CONDITIONING

23 00 00.01 CONVECTOR – SEE HVAC
23 00 00.02 DIFFUSER – SEE HVAC
23 00 00.03 CABINET UNIT HEATER – SEE HVAC
23 00 00.04 PTAC UNIT – SEE HVAC
23 00 00.06 ROOF TOP UNIT – SEE HVAC
23 00 00.08 BOILER STACK – SEE HVAC
23 00 00.10 FAN – SEE HVAC
23 00 00.12 EXHAUST FAN UNIT – SEE HVAC
23 00 00.14 VENT – SEE HVAC
23 00 00.20 SUPPLY AIR REGISTER – SEE HVAC
23 00 00.21 RETURN AIR REGISTER – SEE HVAC
23 00 00.22 AIR PLENUM – SEE HVAC
23 00 00.23 DUCT – SEE HVAC
23 00 00.24 FLEXIBLE AIR DUCT – SEE HVAC
23 00 00.25 RADIANT PANEL – SEE HVAC
23 00 00.30 STAINLESS STEEL EXHAUST HOOD –SEE HVAC

DIVISION 24 - RESERVED

24 00 00 NOT USED

24 00 00.01 NOT USED

DIVISION 25 - INTEGRATED AUTOMATION

25 00 00 NOT USED

25 00 00.01 NOT USED

DIVISION 26 - ELECTRICAL

26 00 00 ELECTRICAL

26 00 00.01 LIGHT FIXTURE – SEE ELECTRICAL
26 00 00.02 COVE LIGHT FIXTURE – SEE ELECTRICAL
26 00 00.03 2x4 LIGHT FIXTURE – SEE ELECTRICAL
26 00 00.04 2x2 LIGHT FIXTURE – SEE ELECTRICAL
26 00 00.05 1x4 LIGHT FIXTURE – SEE ELECTRICAL
26 00 00.06 8' LONG PENDANT LIGHT FIXTURE – SEE ELECTRICAL
26 00 00.07 4' LONG PENDANT LIGHT FIXTURE – SEE ELECTRICAL
26 00 00.08 4' INDUSTRIAL LIGHT FIXTURE – SEE ELECTRICAL
26 00 00.09 DOWN LIGHT – SEE ELECTRICAL
26 00 00.10 WALL MOUNTED LIGHT – SEE ELECTRICAL
26 00 00.11 PENDANT LIGHT FIXTURE – SEE ELECTRICAL
26 00 00.12 UNDER-COUNTER LIGHT – SEE ELECTRICAL
26 00 00.13 EXTERIOR LIGHT FIXTURE – SEE ELECTRICAL
26 00 00.15 UNDER SLAB CONDUIT – SEE ELECTRICAL
26 00 00.16 ELECTRICAL CONDUIT – SEE ELECTRICAL
26 00 00.21 CEILING MOUNTED SPEAKER BAFFLE – SEE ELECTRICAL
26 00 00.22 FIRE ALARM ANNUNCIATOR PANEL – SEE ELECTRICAL
26 00 00.23 FIRE ALARM AUDIO/VISUAL UNIT – SEE ELECTRICAL
26 00 00.24 FIRE ALARM PULL – SEE ELECTRICAL
26 00 00.25 EXIT SIGN – SEE ELECTRICAL
26 00 00.26 FIRE ALARM CONTROL PANEL – SEE ELECTRICAL
26 00 00.27 FIRE BEACON – SEE ELECTRICAL
26 00 00.28 FIRE BELL – SEE ELECTRICAL
26 00 00.30 SCOREBOARD – SEE ELECTRICAL
26 00 00.31 SHOT CLOCK – SEE ELECTRICAL
26 00 00.35 DESTRATIFICATION FAN – SEE ELECTRICAL
26 00 00.45 SURFACE MTD JUNCTION BOX AND CONDUIT FOR SOUND SYSTEM – SEE ELECRICAL
26 00 00.50 ELECTRICAL OUTLET – SEE ELECTRICAL
26 00 00.51 ELECTRICAL FLOOR OUTLET – SEE ELECTRICAL
26 00 00.52 LIGHT SWITCH – SEE ELECTRICAL
26 00 00.53 ELECTRICAL RETRACTABLE OVERHEAD OUTLET – SEE ELECTRICAL
26 00 00.54 ELECTRICAL OUTLET WITH DIRECT CURRENT – SEE ELECTRICAL
26 00 00.60 LCD ANNUNCIATOR – SEE ELECTRICAL
26 00 00.72 ELECTRICAL POWER PANELS – SEE ELECTRICAL
26 00 00.75 EMERGENCY LIGHTING
26 00 00.76 SECURITY STROBE
26 00 00.98 EMERGENCY SHUT OFF – SEE ELECTRICAL
26 00 00.99 ELECTRICAL PANEL – SEE ELECTRICAL

DIVISION 27 - COMMUNICATIONS

27 10 00 STRUCTURED CABLING

27 10 00.01 CPU HOLDER – SEE TECHNOLOGY
27 10 00.10 DATA OUTLET – SEE TECHNOLOGY
27 10 00.11 TELEPHONE JACK – SEE TECHNOLOGY – TELEPHONE DEVICE TO BE OWNER FURNISHED AND INSTALLED
27 10 00.21 EQUIPMENT RACK – SEE TECHNOLOGY
27 10 00.22 CABLE TRAY – SEE TECHNOLOGY

27 21 33 DATA COMMUNICATIONS WIRELESS ACCESS POINTS

27 21 33.01 WIRELESS ACCESS POINT – SEE TECHNOLOGY

27 40 00 AUDIO-VIDEO COMMUNICATIONS

27 40 00.01 LCD TV – SEE TECHNOLOGY
27 40 00.02 CAMERA – SEE TECHNOLOGY
27 40 00.03 VIDEO DISPLAY MONITOR
27 40 00.04 VIDEO DISPLAY WALL BRACKET
27 40 00.06 SPEAKER – SEE TECHNOLOGY
27 40 00.07 EQUIPMENT RACK
27 40 00.08 PROJECTOR – SEE TECHNOLOGY
27 40 00.10 FACE PLATE – SEE TECHNOLOGY

27 50 00 DISTRIBUTED COMMUNICATIONS AND MONITORING

27 50 00.01 SPEAKER – SEE TECHNOLOGY
27 50 00.11 CLOCK – SEE TECHNOLOGY

27 70 00 VIDEO DISTRIBUTION SYSTEM

27 70 00.01 TV – FLAT SCREEN – SEE TECHNOLOGY

DIVISION 28 - ELECTRONIC SAFETY AND SECURITY

28 00 00 ELECTRONIC SAFETY AND SECURITY

28 00 00.01 CAMERA – SEE TECHNOLOGY
28 00 00.02 CARD READER – SEE TECHNOLOGY
28 00 00.10 SECURITY KEYPAD – SEE TECHNOLOGY
28 00 00.11 MOTION SENSOR – SEE TECHNOLOGY

DIVISION 29 - RESERVED

29 00 00 NOT USED

29 00 00.01 NOT USED

DIVISION 30 - RESERVED

30 00 00 NOT USED

30 00 00.01 NOT USED

DIVISION 31 - EARTHWORK

31 00 00 NOT USED

31 00 00.01 NOT USED

DIVISION 32 - EXTERIOR IMPROVEMENTS

32 13 13 SITE CONCRETE

32 13 13.01 SIDEWALK – SEE CIVIL/LANDSCAPE
32 13 13.02 BOND BREAKER

DIVISION 33 - UTILITIES

33 00 00 NOT USED

33 00 00.01 NOT USED

DIVISION 34 - TRANSPORTATION

34 00 00 NOT USED

34 00 00.01 NOT USED

DIVISION 35 - WATERWAY AND MARINE CONSTRUCTION

35 00 00 NOT USED

35 00 00.01 NOT USED

A13 architects
526 Boston Post Rd Wayland, MA
508.358.0790 www.a13architects.com

BEVERLY MIDDLE SCHOOL

CABOT STREET
BEVERLY, MA 01915

Copyright © 2016 A13 Architects, LLC

90% CONSTRUCTION DOCUMENTS

NOT FOR CONSTRUCTION

NORTH ARROW

KEYPLAN

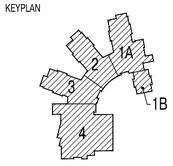

DRAWING NAME:

MASTER KEYNOTE LIST

DRAWN BY: BPH
REVIEWED BY: BPH
SCALE: N.T.S.
JOB NO.: 1403.00
DATE: July 25, 2016
DRAWING NUMBER: A0.02

Graphic Symbols

FIRST FLOOR ELEV. 100'-0"	LEVEL LINE, CONTROL OR DATUM ELEVATION
6	PARTITION TYPE
B1	CASEWORK TYPE
A	EXTERIOR WINDOW TYPE
CW1	CURTAINWALL TYPE
SF1	STOREFRONT TYPE
L1	LOUVER TYPE
W1	INTERIOR WINDOW TYPE
S	SPANDREL GLASS
X / AX.XX	BUILDING SECTION REFERENCE DWG #
X / AX.XX	WALL SECTION REFERENCE DWG #
X / AX.XX	SECTION DETAIL REFERENCE DWG #
X / AX.XX	DETAIL REFERENCE DWG #
X / AX.XX	EXTERIOR ELEVATION REFERENCE DWG #
CLASSROOM 1234	ROOM NAME & NUMBER
4 / AX.XX / 2 / 3	INTERIOR ELEVATION REFERENCE DWG #
1234A	DOOR NUMBER
A	STRUCTURAL GRID COLUMN CENTER LINE
	CENTER LINE
	HIDDEN OR CONSTRUCTION ABOVE OR BEYOND
	BREAK LINE
8'-0"	DIMENSION LINE
	WOOD GRAIN DIRECTION

Material Indications

EARTH	EARTH/ COMPACT FILL	POROUS FILL/ GRAVEL
CONCRETE	CONCRETE	SAND MORTAR
MASONRY	BRICK	CONCRETE MASONRY UNIT
STONE	RUBBLE	MARBLE
METAL	STEEL/IRON	ALUMINUM

Note: this symbol represents masonry on plans & details

WOOD	INTERMEDIATE BLOCKING	CONTINUOUS BLOCKING
	PLYWOOD	FINISH
GLASS	GLASS	GLASS BLOCK
INSULATION	BATT/ LOOSE FILL	RIGID
	FIBE SARING	

ARCHITECTURAL ABBREVIATION LIST:

A	ACRE
AC	AIR CONDITIONING
ACST	ACOUSTICAL
ACT	ACOUSTICAL CEILING TILE
AD	AREA DRAIN
ADD	ADDENDUM
ADDL	ADDITIONAL
ADJ	ADJUSTABLE, ADJACENT
AFF	ABOVE FINISH FLOOR
AGGR	AGGREGATE
AHU	AIR HANDLING UNIT
ALT	ALTERNATE
ALUM	ALUMINUM
ANOD	ANODIZED
AP	ACCESS PANEL
APRX	APPROXIMATE
ARCH	ARCHITECTURAL
AVG	AVERAGE
&	AND
∠	ANGLE
@	AT
BC	BRICK COURSE
BD	BOARD
BG	BELOW GRADE
BL	BUILDING LINE
BLDG	BUILDING
BLK	BLACK
BLKG	BLOCKING
BLR	BOILER
BM	BEAM, BENCH MARK
BTM	BOTTOM
BTU	BRITISH THERMAL UNIT
BOW	BOTTOM OF WALL
CAB	CABINET
CB	CHALK BOARD
CBN	CATCH BASIN
CJ	CONTROL JOINT
CL	CENTER LINE
CLG	CEILING
CLKG	CAULKING
CLOS	CLOSET
CLR	CLEAR
CLSRM	CLASSROOM
CMT	CERAMIC MOSAIC TILE
CMTB	CERAMIC MOSAIC TILE BASE
CMU	CONCRETE MASONRY UNIT
COL	COLUMN
COMP	COMPRESSIBLE
CONC	CONCRETE
CONST	CONSTRUCTION
CONT	CONTINUOUS
CONTR	CONTRACTOR
CORR	CORRIDOR
CPT	CARPET
CRS	COURSE
CT	CERAMIC TILE
CTB	CERAMIC TILE BASE
CTR	CENTER
CUH	CABINET UNIT HEATER
CW	COLD WATER
[	CHANNEL
D	DEEP
DBL	DOUBLE
DEG	DEGREE
DEMO	DEMOLITION
DEPT	DEPARTMENT
DET	DETAIL
DF	DRINKING FOUNTAIN
DIA	DIAMETER
DIFF	DIFFUSER
DIM	DIMENSION
DISP	DISPENSER
DIV	DIVISION
DN	DOWN
DPFG	DAMPROOFING
DR	DOOR
DRW	DRAWER
DS	DOWNSPOUT
DWG	DRAWING
E	EAST
EA	EACH
EJ	EXPANSION JOINT
EL	ELEVATION
ELEC	ELECTRICAL
ELEV	ELEVATOR
EMER	EMERGENCY
ENCL	ENCLOSURE
ENTR	EXTRANCE
EP	ELECTRICAL PANEL, EPOXY PAINT
EQ	EQUAL
EQUP	EQUIPMENT
EWC	ELECTRIC WATER COOLER
EX	EXISTING
EXCV	EXCAVATION
EXP	EXPOSED
EXT	EXTERIOR
EXTR	EXTRUDED
FA	FIRE ALARM
FAB	FABRICATE
FAF	FLUID-APPLIED ATHLETIC FLOORING
FB	FLAT BAR
FD	FLOOR DRAIN
FDVC	FIRE DEPARTMENT VALVE CABINET
FE	FIRE EXTINGUISHER
FEC	FIRE EXTINGUISHER CABINET
FEJ	FLOOR EXPANTION JOINT
FF	FINISH FLOOR
FH	FIRE HYDRANT
FIN	FINISH
FIN GR	FINISH GRADE
FIX	FIXED
FIXT	FIXTURE
FLASH	FLASHING
FLEX	FLEXIBLE
FLOUR	FLOURESCENT
FLR	FLOOR
FND	FOUNDATION
FPRF	FIRE PROOFING
FRT	FIRE RETARDANT TREATED
FS	FOOD SERVICE
FT	FOOT, FEET
FTG	FOOTING
FTR	FINNED TUBE RADIATION
FURN	FURNITURE
FURR	FURRING
FUT	FUTURE
GA	GUAGE
GALV	GALVANIZED
GC	GENERAL CONTRACTOR
GEN	GENERAL, GENERATOR
GFRG	GLASS FIBER REINFORCED GYPSUM
GFRP	GLASS FIBER REINFORCED PLASTER
GL	GLASS
GND	GROUND
GWB	GYPSUM WALL BOARD
GYP	GYPSUM
H	HIGH
HC	HOLLOW CORE
HDW	HARDWARE
HM	HOLLOW METAL
HORZ	HORIZONTAL
HP	HIGH POINT
HR	HOUR
HSMB	HORIZONTAL SLIDING MARKER BOARD
HT	HEIGHT
HVAC	HEATING VENTILATION & AIR CONDITIONING
HW	HOT WATER
HWD	HARDWOOD
ID	INSIDE DIAMETER
IN	INCH, INCHES
INCL	INCLUDE, INCLUSIVE
INSUL	INSULATION, INSULATED
INT	INTERIOR
INV	INVERT, INVERSE
JAN	JANITOR
JT	JOINT
KD	KNOCKED DOWN
KEC	KITCHEN EQUIPMENT CONTRACTOR
KIT	KITCHEN
KW	KILOWATT
KWH	KILOWATT PER HOUR
L	LEFT, LONG
LAM	LAMINATE, LAMINATED
LAV	LAVATORY
LB	POUND
LF	LINEAR FOOT, LINEAR FEET
LH	LEFT HAND
LP	LOW POINT
LT	LIGHT
LTG	LIGHTING
MAT	ENTRANCE MATS, ENTRANCE GRATE
MATL	MATERIAL
MAX	MAXIMUM
MB	MARKER BOARD
MECH	MECHANICAL
MEMB	MEMBRANE
MFR	MANUFACTURER
MIN	MINIMUM
MISC	MISCELLANEOUS
MO	MASONRY OPENING
MR	MOISTURE RESISTANT
MTD	MOUNTED
MTG	MOUNTING, MEETING
MTL	METAL
MUL	MULLION
N	NORTH
NAT	NATURAL
NIC	NOT IN CONTRACT
NO	NUMBER
NOM	NOMINAL
NRC	NOISE REDUCTION COEFFICIENT
NTS	NOT TO SCALE
OA	OVERALL
OC	ON CENTER
OD	OUTSIDE DIAMETER
OFOI	OWNER FURNISHED / OWNER INSTALLED
OFCI	OWNER FURNISHED / CONTRACTOR INSTALLED
OH	OVERHEAD
OPER	OPERABLE
OPNG	OPENING
OPP	OPPOSITE
OZ	OUNCE
P	PAINT
PAR	PARALLEL
PERF	PERFORATED
PERP	PERPENDICULAR
PG	PAINT GRADE
PL	PLATE
PLAM	PLASTIC LAMINATE
PLBG	PLUMBING
PLAS	PLASTER
PNL	PANEL, PANELING
POL	POLISHED
PR	PAIR
PRFB	PREFABRICATED
PRTBD	PARTICLE BOARD
PSI	POUNDS PER SQUARE INCH
PT	PRESSURE TREATED
PTD	PAINTED
PTN	PARTITION
PWD	PLYWOOD
QR	QUARTER ROUND
QT	QUARRY TILE
QUAL	QUALITY
QUAN	QUANTITY
R	RADIUS, RISER, RUBBER
RB	RUBBER BASE
RCPT	RECEPTACLE
RD	ROOF DRAIN
REC	RECESSED
RECT	RECTANGULAR
REF	REFERENCE
REFL	REFLECTED
REFR	REFRIGERATOR
REINF	REINFORCED
REQD	REQUIRED
RESIL	RESILIENT
REV	REVISE, REVERSE
RH	RIGHT HAND
RHR	RIGHT HAND REVERSE
RL	RAIN LEADER
RLG	RAILING
RO	ROUGH OPENING
RR	RUBBER RISER
RT	RIGHT
RTR	RUBBER TILE, RUBBER TREAD
S	SOUTH
SC	SOLID CORE
SCHD	SCHEDULE
SCRF	STATIC-CONTROL RESILIENT FLOORING
SECT	SECTION
SEG	SEGMENT
SF	SQUARE FOOT
SH	SHELF
SHT	SHEET
SHR	SHOWER
SHVT	SEAMLESS SHEET VINYL
SIM	SIMILAR
SLH	SLOTTED HORIZONTAL
SLV	SLOTTED VERTICAL
SMFL	SEAMLESS FLOORING
SPEC	SPECIFICATION
SQ	SQUARE
SQIN	SQUARE INCH
SS	STAINLESS STEEL
SSM	SOLID SURFACE MATERIAL
ST	STREET
STA	STATION
STC	SOUND TRANSMISSION CLASSIFICATION
STD	STANDARD
STL	STEEL
STOR	STORAGE
STR	STRUCTURE
STRL	STRUCTURAL
SUB	SUBCONTRACTOR
SUSP	SUSPENDED
SWD	SOFT WOOD
SYM	SYMETRICAL
SYN	SYNTHETIC
SYST	SYSTEM
T	TREAD
T&G	TONGUE AND GROOVE
TB	TACK BOARD
TC	TOP OF CURB
TEL	TELEPHONE
TEMP	TEMPORARY, TEMPERATURE
TFE	THIN-FILM EPOXY FLOORING
THK	THICK
THR	THRESHOLD
TLT	TOILET
TO	TOP OF
TOB	TOP OF BLOCKING
TOC	TOP OF CONCRETE
TOF	TOP OF FOUNDATION / FOOTING
TOS	TOP OF STEEL
TRK	TRACK
TS	TUBE STEEL
TV	TELEVISION
TW	TOP OF WALL
TYP	TYPICAL
TZ	TERRAZO
UC	UNDERCUT
UL	UNDERWRITERS LABORATORY
UNO	UNLESS NOTED OTHERWISE
UR	URINAL
UV	UNIT VENTILATOR, ULTRAVIOLET
VB	VINYL BASE
VCT	VINYL COMPOSITE TILE
VERT	VERTICAL
VEST	VESTIBULE
VIF	VERIFY IN FIELD
VP	VENEER PLASTER
VTR	VENT THROUGH ROOF
VWC	VINYL WALLCOVERING
W	WEST, WIDE, WIDTH
W/	WITH
W/O	WITHOUT
WAB	WOOD ATHLETIC FLOORING VENTED BASE
WAF	WOOD ATHLETIC FLOORING
WC	WATER CLOSET
WD	WOOD
WEJ	WALL EXPANSION JOINT
WF	WIDE FLANGE
WH	WATER HEATER
WP	WORK POINT
WPFG	WATER PROOFING
WSF	WOOD STRIP FLOORING
WT	WEIGHT, WT (STEEL SHAPE)
XBAR	CROSSBAR
XH	EXTRA HEAVY
XL	EXTRA LARGE
YD	YARD
YR	YEAR
YS	YIELD STRENGTH
Z	MODULUS OF SECTION
ZN	ZINC

architects
526 Boston Post Rd Wayland, MA
508.358.0790 www.ai3architects.com

BEVERLY MIDDLE SCHOOL

CABOT STREET
BEVERLY, MA 01915

Copyright © 2016 AI3 Architects, LLC

KEYNOTE LEGEND: (REFERENCE SHEETS A0.01 & A0.02 FOR MASTER KEYNOTE LIST AND KEYNOTES NOT LISTED)

90% CONSTRUCTION DOCUMENTS

NOT FOR CONSTRUCTION

NORTH ARROW

KEYPLAN

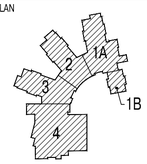

DRAWING NAME:

ABBREVIATIONS, SYMBOLS AND MATERIAL INDICATIONS

DRAWN BY:	FPB
REVIEWED BY:	CLO
SCALE:	N.T.S.
JOB NO.:	1403.00
DATE:	July 25, 2016
DRAWING NUMBER:	A0.03

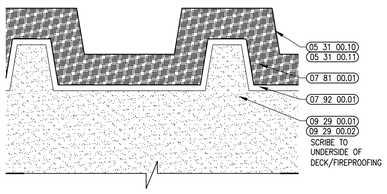

9 METAL STUD WALL HEAD DETAIL
3" = 1'-0" AT ROOF DECK, TYP

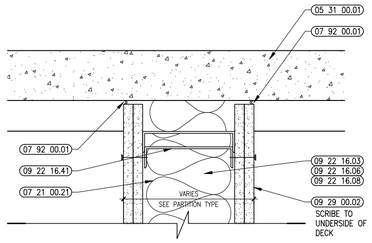

8 ACOUSTIC WALL HEAD DETAIL, TYP
3" = 1'-0" SIM AT NON-ACOUSTIC

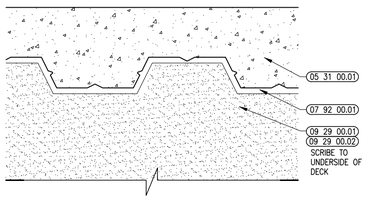

7 METAL STUD WALL HEAD DETAIL
3" = 1'-0" AT FLOOR SLAB, TYP

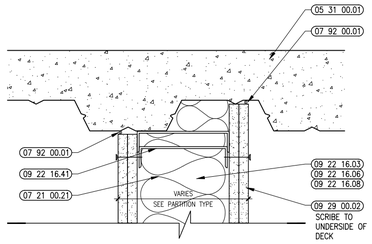

6 ACOUSTIC WALL HEAD DETAIL, TYP
3" = 1'-0" SIM AT NON-ACOUSTIC

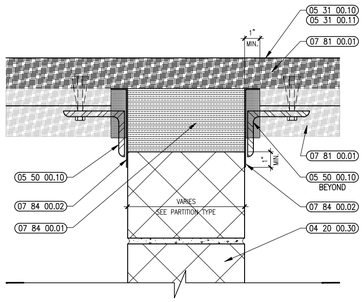

5 RATED WALL HEAD DETAIL
3" = 1'-0"

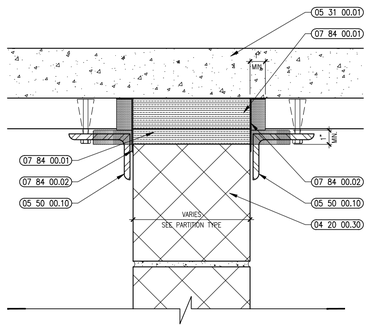

4 RATED WALL HEAD DETAIL
3" = 1'-0"

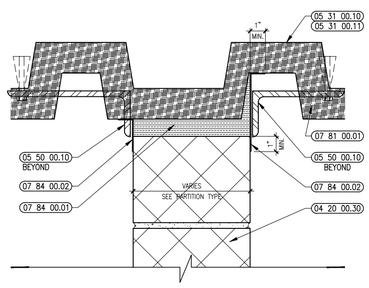

3 RATED WALL HEAD DETAIL
3" = 1'-0"

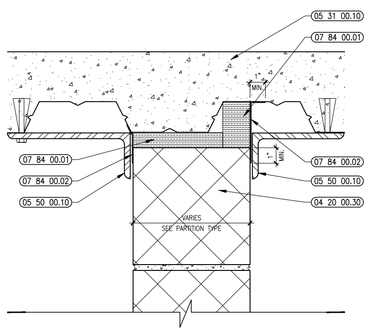

2 RATED WALL HEAD DETAIL
3" = 1'-0"

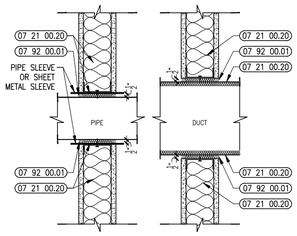

WALL PENETRATION DETAILS

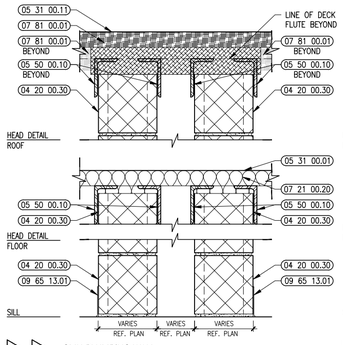

6 B CMU PLUMBING WALL

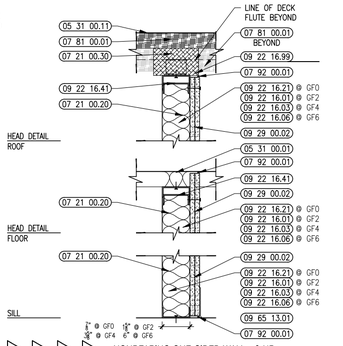

GF0 GF2 GF4 GF6 NONBEARING ONE-SIDED WALL - 0 HR.
AT AUDITORIUM WALL LOCATIONS, STUDS ARE INSTALLED MAXIMUM 12"O.C

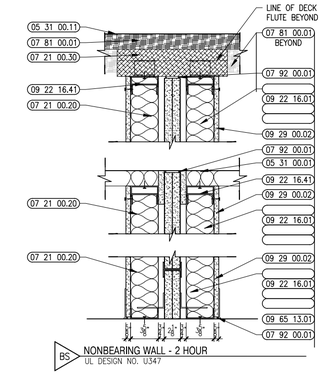

BS NONBEARING WALL - 2 HOUR
UL DESIGN NO. U347

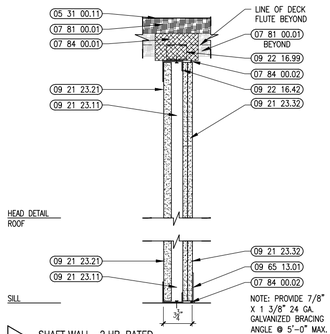

S1 SHAFT WALL - 2 HR. RATED
UL DESIGN NO. U497

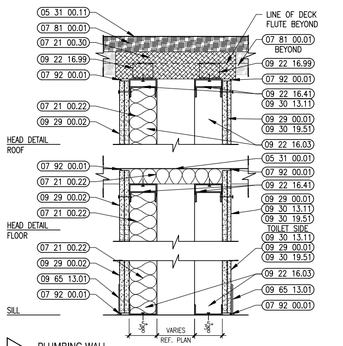

GP PLUMBING WALL
STC 60
– ALL PLUMBING/PIPING CONNECTIONS SHALL BE SECURED EXCLUSIVELY TO THE STUDS ON THE TOILET SIDE OF THE WALL TO PREVENT TRANSMISSION OF STRUCTURE–BORNE NOISE TO ADJACENT SPACES
– EACH ROW OF STUDS TO BE FREESTANDING TO PREVENT TRANSMISSION OF NOISE

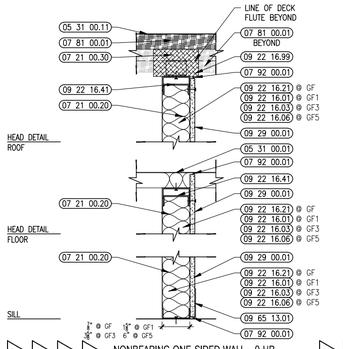

GF GF1 GF3 GF5 NONBEARING ONE-SIDED WALL - 0 HR.
AT AUDITORIUM WALL LOCATIONS, STUDS ARE INSTALLED MAXIMUM 12"O.C

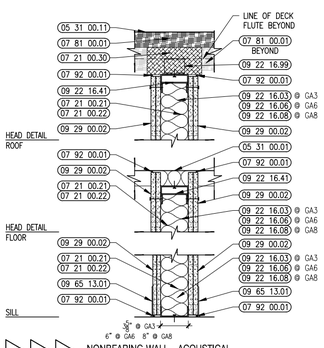

GA3 GA6 GA8 GA10 NONBEARING WALL - ACOUSTICAL
STC 50
NOTE 1: AT AUDITORIUM WALL LOCATIONS, STUDS ARE INSTALLED MAXIMUM 12"O.C
NOTE 2: AT CLASSROOM CORRIDORS (CORRIDOR SIDE) ABUSE RESISTANCE DRYWALL WILL BE USED FROM ABOVE WALL TILE LOCATION TO 7'-0" ABOVE FF

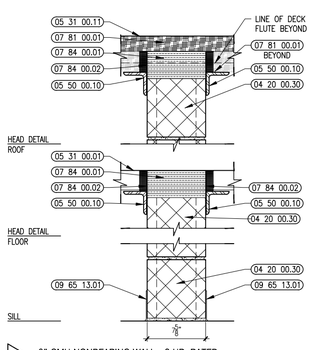

8.2 8" CMU NONBEARING WALL - 2 HR. RATED
UL DESIGN NO. U905

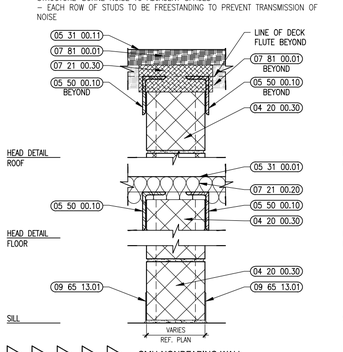

4 6 8 10 12 CMU NONBEARING WALL

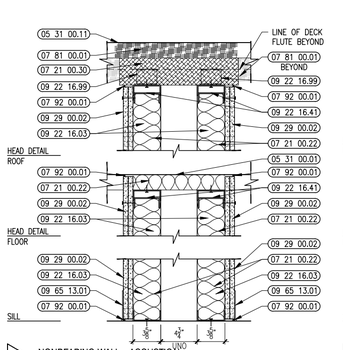

G0 NONBEARING WALL - ACOUSTICAL
STC 60
– EACH ROW OF STUDS TO BE FREESTANDING TO PREVENT TRANSMISSION OF NOISE

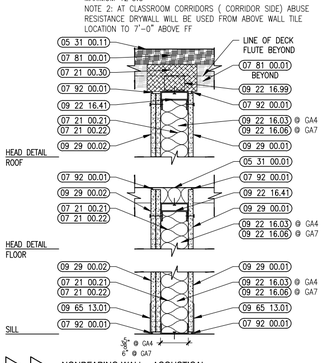

GA4 GA7 NONBEARING WALL - ACOUSTICAL
STC 45

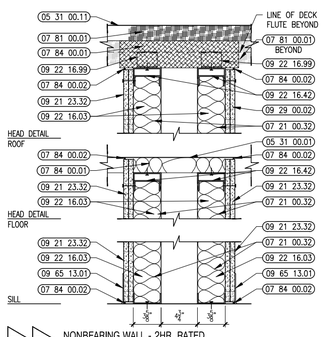

F23 F26 NONBEARING WALL - 2HR. RATED
UL DESIGN NO. V446

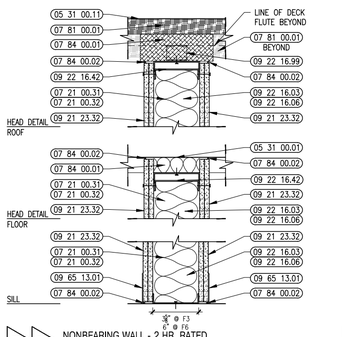

F3 F6 NONBEARING WALL - 2 HR. RATED
UL DESIGN NO. U419
STC 50

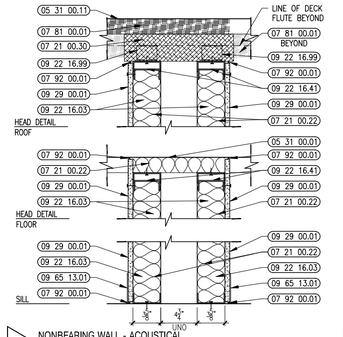

G8 NONBEARING WALL - ACOUSTICAL
STC 53
– EACH ROW OF STUDS TO BE FREESTANDING TO PREVENT TRANSMISSION OF NOISE
NOTE 1: WALLS AT GYMNASIUM WILL BE IMPACT RESISTANT (GYM SIDE) GYP. WALLBOARD W/ 1/2" PLYWOOD BACKING (09 29 00.09), TO STRUCTURE
NOTE 2: AT CLASSROOM CORRIDORS (CORRIDOR SIDE) ABUSE RESISTANCE DRYWALL WILL BE USED FROM ABOVE WALL TILE LOCATION TO 7'-0" ABOVE FF

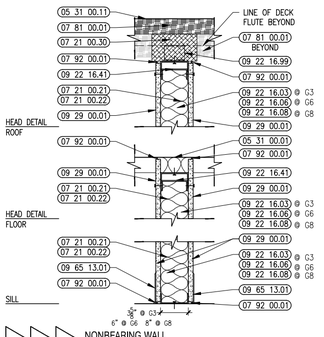

G3 G6 G8 NONBEARING WALL

1 PARTITION TYPES
1-1/2" = 1'-0"

architects
526 Boston Post Rd Wayland, MA
508.358.0790 www.ai3architects.com

BEVERLY MIDDLE SCHOOL

CABOT STREET
BEVERLY, MA 01915

Copyright © 2016 A13 Architects, LLC

KEYNOTE LEGEND: (REFERENCE SHEETS A0.01 & A0.02 FOR MASTER KEYNOTE LIST AND KEYNOTES NOT LISTED)

04 20 00.30	CMU – STANDARD – NORMAL WEIGHT – REFERENCE DRAWINGS FOR DEPTH SIZE AND FIRE RATING
05 31 00.01	COMPOSITE STEEL DECK – SEE STRUCTURAL
05 31 00.10	STEEL ROOF DECK – 1 1/2 INCH GALVANIZED – SEE STRUCTURAL
05 31 00.11	STEEL ROOF DECK – 3 INCH GALVANIZED – SEE STRUCTURAL
05 50 00.10	STEEL ANGLE – SEISMIC CLIP – SEE STRUCTURAL
07 21 00.20	GLASS FIBER INSULATION
07 21 00.21	GLASS FIBER ACOUSTICAL BLANKET INSULATION – 6 INCH – UNFACED
07 21 00.22	GLASS FIBER ACOUSTICAL BLANKET INSULATION – 3 1/2 INCH – UNFACED
07 21 00.30	MINERAL FIBER INSULATION
07 21 00.31	MINERAL FIBER ACOUSTICAL INSULATION – 6 INCH
07 21 00.32	MINERAL FIBER ACOUSTICAL INSULATION – 3 1/2 INCH
07 81 00.01	CEMENTITIOUS FIREPROOFING
07 84 00.01	FIRE SAFING MINERAL WOOL
07 84 00.02	CAULK – CAULK AND PUTTY
07 92 00.01	JOINT SEALANT – TYPE AS REQUIRED
09 21 23.11	METAL SHAFTWALL C–H STUD – 2 1/2 INCH – 24 INCHES O.C. MAX
09 21 23.21	GYPSUM SHAFTWALL LINER PANEL – 1 INCH
09 21 23.32	GYPSUM BOARD – 5/8 INCH TYPE "X" – 2 LAYERS

GENERAL NOTES:

1. CONTRACTOR SHALL MAINTAIN THE INTEGRITY OF ALL SPRAY FIREPROOFING. PROVIDE PATCHING AND TOUCH UP OF SPRAY FIREPROOFING AS REQUIRED, TYPICAL.

2. PROVIDE DIAGONAL BRACING @ METAL STUD PARTITIONS ABOVE CEILING AS REQUIRED.

3. ALL STEEL ANGLE RESTRAINERS AND ASSOCIATED STEEL CHANNELS AND ANGLES BETWEEN STRUCTURE ARE TO BE FURNISHED BY 05 50 00.

4. SEE STRUCTURAL DRAWINGS FOR SIZES OF ALL STEEL ANGLE RESTRAINERS AND REQUIREMENTS OF FABRICATION METAL BETWEEN STRUCTURAL MEMBERS.

5. SEE MECHANICAL DRAWINGS FOR CMU PARTITION PENETRATIONS BY DUCTS. PROVIDE STEEL LINTELS AS REQUIRED. SEE STRUCTURAL DRAWINGS FOR LINTEL SCHEDULE.

6. ALL WALL PENETRATIONS, INCLUDING, BUT NOT LIMITED TO PIPING OR DUCTWORK SHOULD BE SEALED. REFER TO PENETRATION DETAILS ON A1.04.

7. SEE INTERIOR ELEVATIONS AND ROOM FINISH SCHEDULE FOR WALL FINISHES OR WALL TILE APPLICATIONS.

8. A CLIP FOR WALL FRAMING AT ROOF CONDITIONS, KEYNOTED 09 22 16.99, IS REQUIRED TO PROVIDE CLEARANCE FOR SPRAY FIREPROOFING.

9. DIMENSIONS ARE TO FACE OF FOUNDATION (F.O.F.), FACE OF STUD (F.O.S.) OR FACE OF MASONRY (F.O.M.), UNLESS NOTED AS "HOLD", "CLEAR", "MIN.", "MAX." OR OTHERWISE INDICATED. DIMENSION LINES INTERSECTING AT COLUMN LINES WITH TICK MARKS ARE TO BE TAKEN FROM COLUMN CENTER.

90% CONSTRUCTION DOCUMENTS

NOT FOR CONSTRUCTION

NORTH ARROW

KEYPLAN

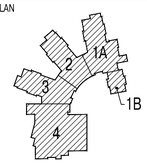

DRAWING NAME:

PARTITION TYPES

DRAWN BY:

REVIEWED BY: BPH

SCALE: As Noted
JOB NO.: 1403.00
DATE: July 25, 2016

DRAWING NUMBER: A0.04

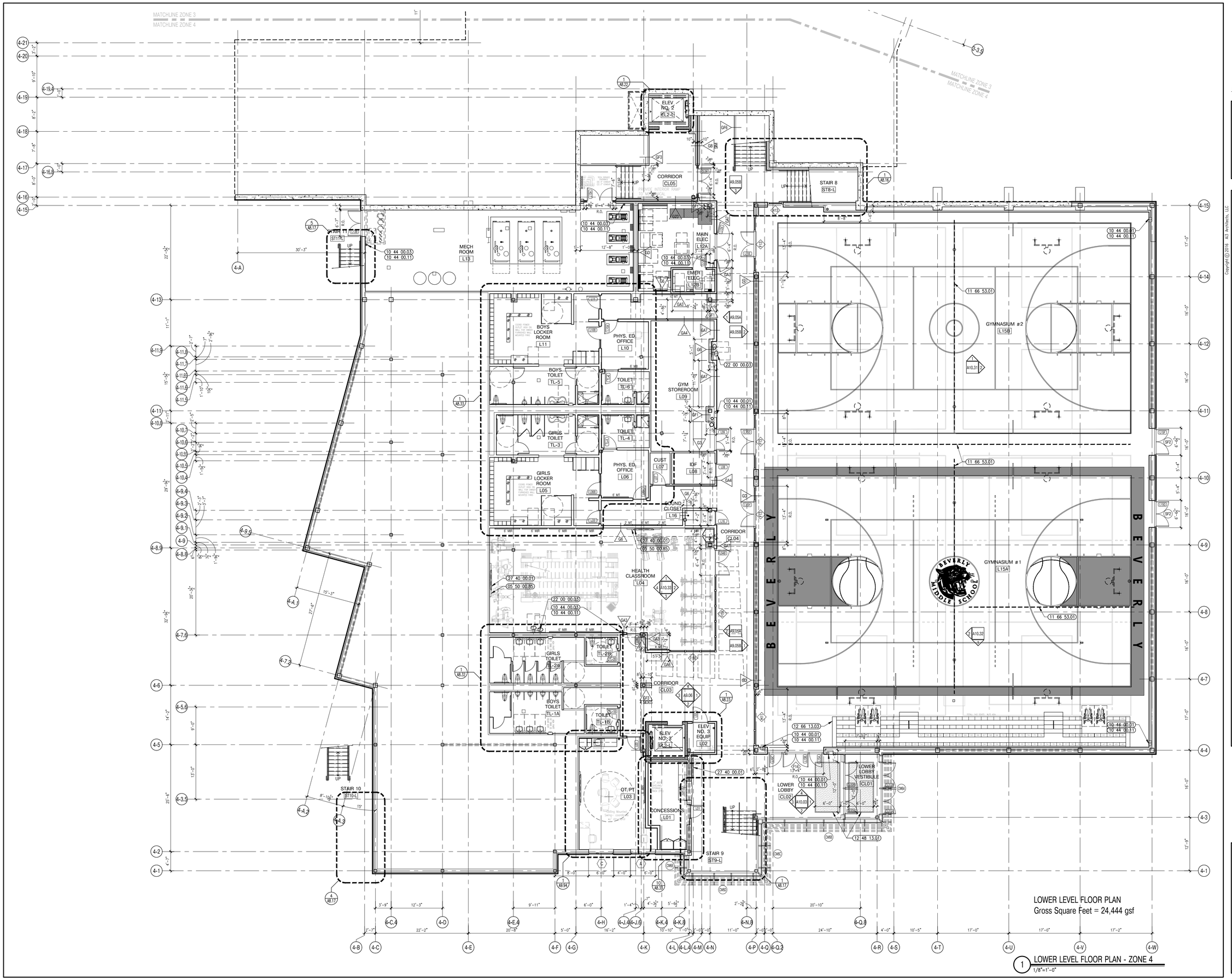

LOWER LEVEL FLOOR PLAN
Gross Square Feet = 24,444 gsf

1 LOWER LEVEL FLOOR PLAN - ZONE 4
1/8"=1'-0"

A13 architects
526 Boston Post Rd Wayland, MA
508.358.0790 www.a13architects.com

BEVERLY MIDDLE SCHOOL

CABOT STREET
BEVERLY, MA 01915

Copyright © 2016 A13 Architects, LLC

KEYNOTE LEGEND: (REFERENCE SHEETS A0.01 & A0.02 FOR MASTER KEYNOTE LIST AND KEYNOTES NOT LISTED)

05 50 00.85	ALUMINUM MARKER TROUGH
10 44 00.01	FIRE EXTINGUISHER CABINET – FULLY RECESSED
10 44 00.03	FIRE EXTINGUISHER WALL MOUNTED BRACKET
10 44 00.11	FIRE EXTINGUISHER
11 66 53.01	ROLL-FOLD DIVIDER CURTAIN – OVERHEAD SUPPORTED
12 48 13.01	RECESSED ENTRANCE MAT – REFERENCE DRAWINGS FOR SIZE
12 66 13.03	PORTABLE TELESCOPING MANUAL WOOD BLEACHERS
22 00 00.03	WATER FOUNTAIN – SEE PLUMBING
27 40 00.01	LCD TV – SEE TECHNOLOGY

GENERAL NOTES:

1. FINISHED LOWER LEVEL ELEVATION TO BE 93'-0" UNLESS NOTED OTHERWISE ON ZONE PLANS.

90% CONSTRUCTION DOCUMENTS

NOT FOR CONSTRUCTION

NORTH ARROW

KEYPLAN

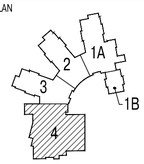

DRAWING NAME:

LOWER LEVEL FLOOR PLAN ZONE 4

DRAWN BY:	RPM
REVIEWED BY:	CLO
SCALE:	As Noted
JOB NO.:	1403.00
DATE:	July 25, 2016
DRAWING NUMBER:	A1.04

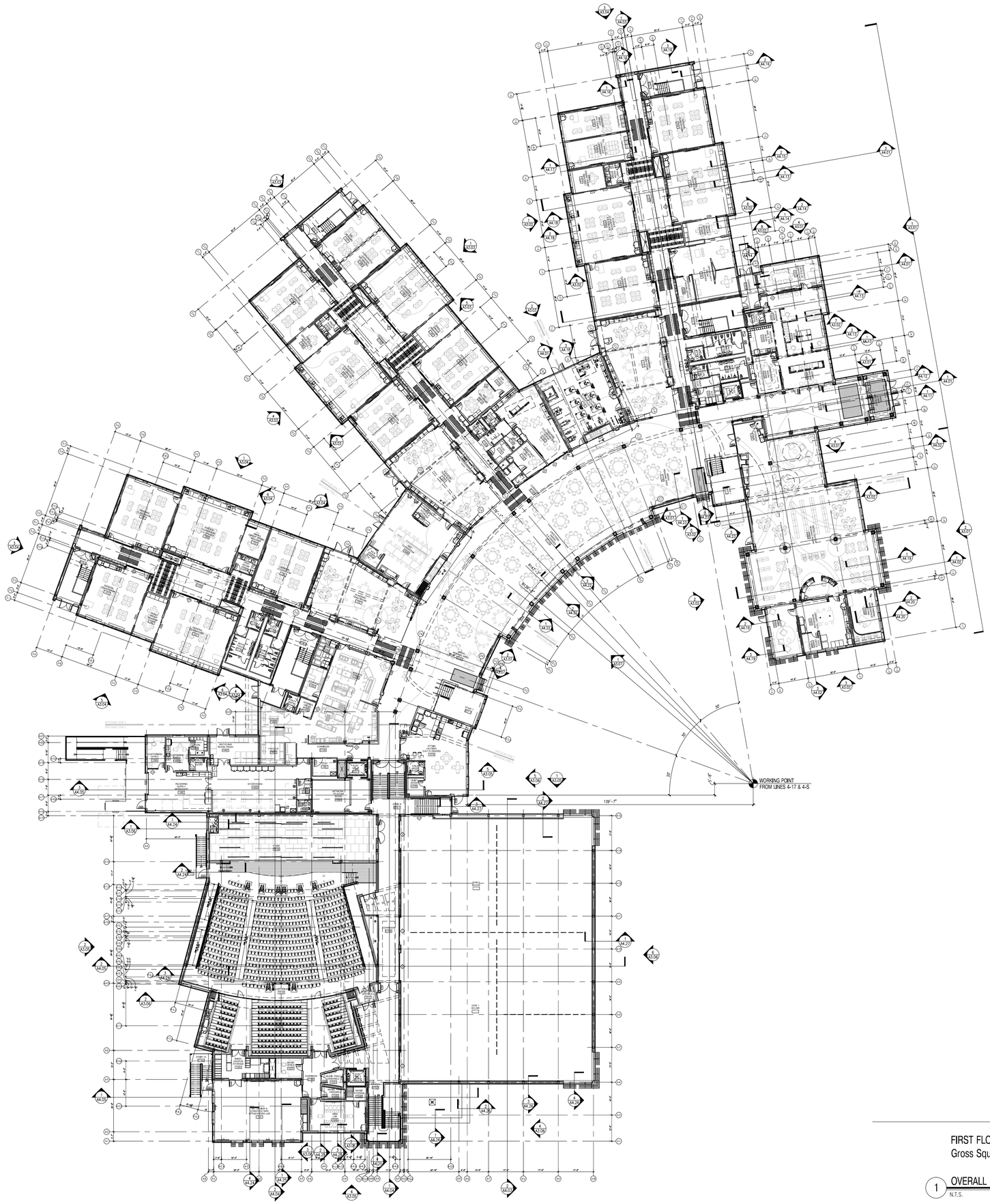

FIRST FLOOR PLAN
Gross Square Feet = 80,726 gsf

1 OVERALL FIRST FLOOR PLAN
N.T.S.

A13 architects
526 Boston Post Rd Wayland, MA
508.358.0790 www.a13architects.com

Copyright © 2016 A13 Architects, LLC

BEVERLY MIDDLE SCHOOL

CABOT STREET
BEVERLY, MA 01915

KEYNOTE LEGEND: (REFERENCE SHEETS A0.01 & A0.02 FOR MASTER KEYNOTE LIST AND KEYNOTES NOT LISTED)

GENERAL NOTES:

1. FINISHED FIRST FLOOR ELEVATION TO BE 100'-0" UNLESS NOTED OTHERWISE ON ZONE PLANS.
2. FINISH FIRST FLOOR ELEVATION OF 100'-0" ON THE ARCHITECTURAL DRAWINGS CORRESPONDS TO ELEVATION 128'-0" ON THE CIVIL AND PLUMBING DRAWINGS.

90% CONSTRUCTION DOCUMENTS

NOT FOR CONSTRUCTION

NORTH ARROW

KEYPLAN

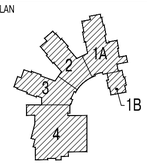

DRAWING NAME:

OVERALL FIRST FLOOR PLAN

DRAWN BY:	JMR
REVIEWED BY:	MB
SCALE:	As Noted
JOB NO.:	1403.00
DATE:	July 25, 2016
DRAWING NUMBER:	A1.10

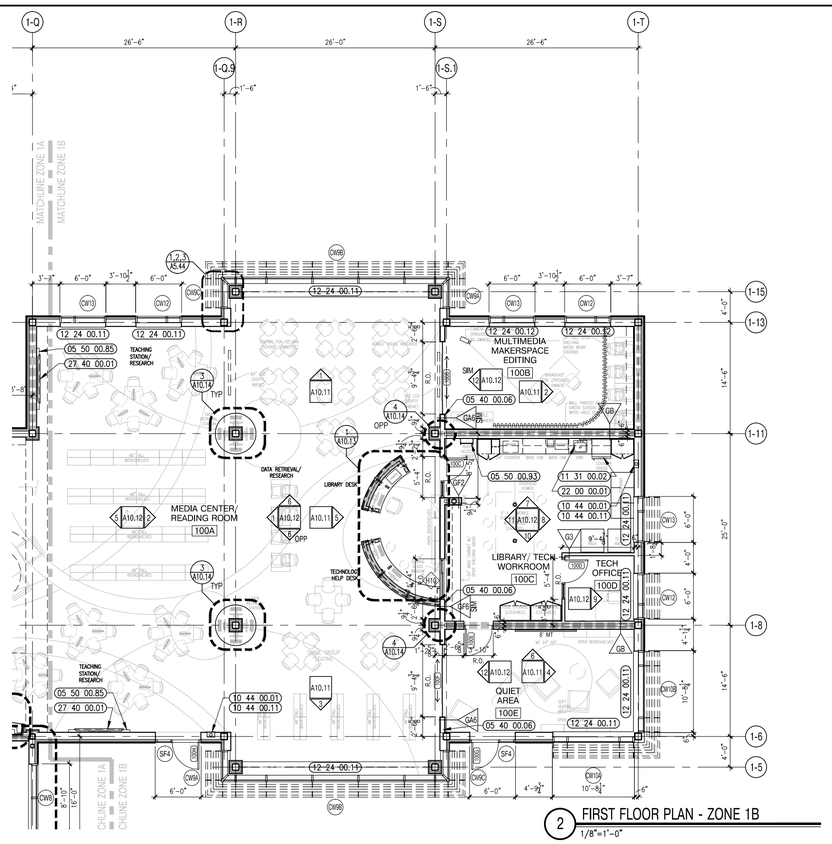

2 FIRST FLOOR PLAN - ZONE 1B
1/8"=1'-0"

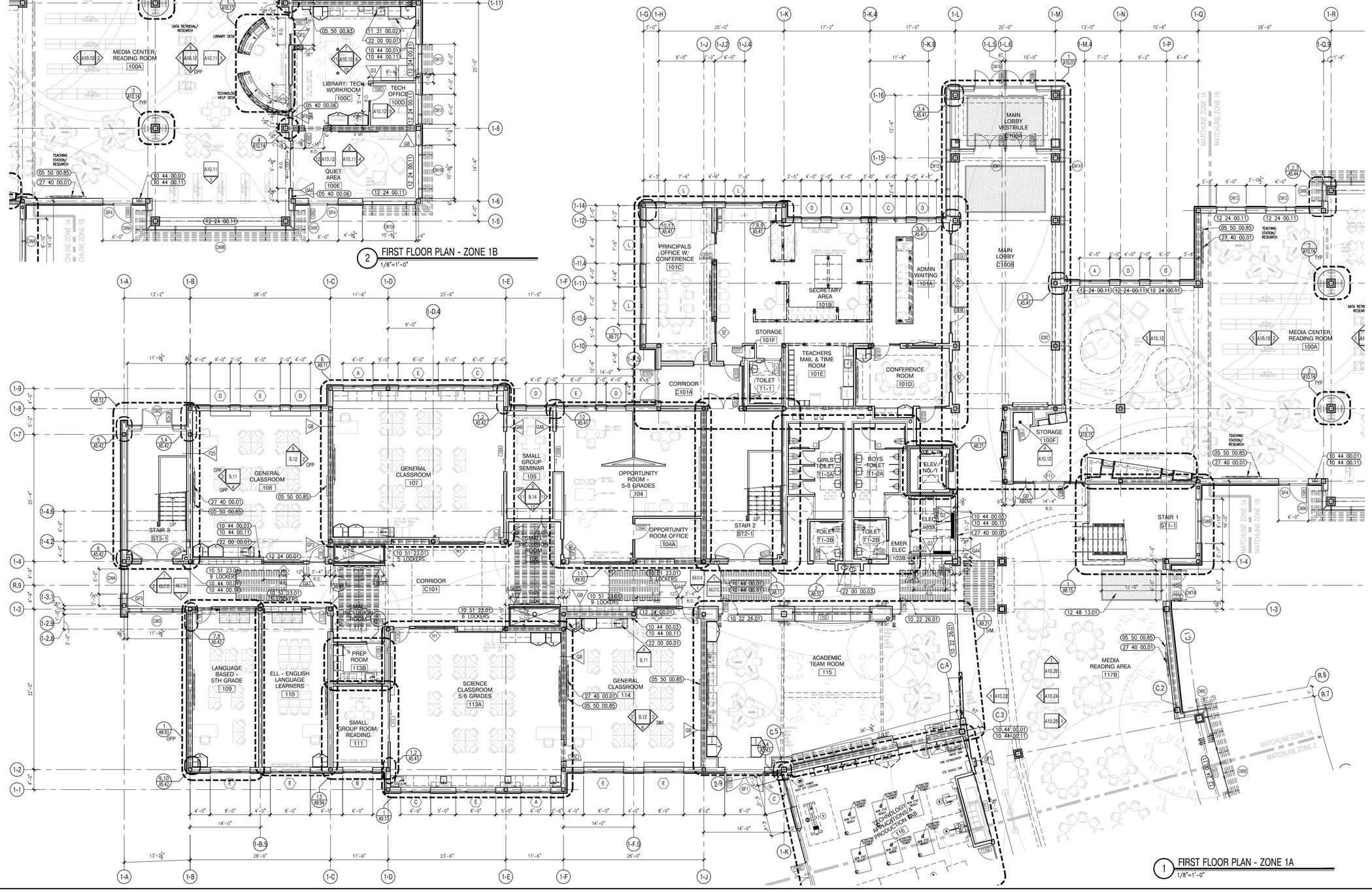

1 FIRST FLOOR PLAN - ZONE 1A
1/8"=1'-0"

A13 architects
526 Boston Post Rd Wayland, MA
508.358.0790 www.a13architects.com

BEVERLY MIDDLE SCHOOL

CABOT STREET
BEVERLY, MA 01915

Copyright © 2016 A13 Architects, LLC

KEYNOTE LEGEND: (REFERENCE SHEETS A0.01 & A0.02 FOR MASTER KEYNOTE LIST AND KEYNOTES NOT LISTED)

05 40 00.06	STEEL STUDS – 6 INCH – 16 INCHES O.C. MAX
05 50 00.85	ALUMINUM MARKER TROUGH
05 50 00.93	ROOF ACCESS LADDER – INTERIOR
10 22 26.01	INTERIOR OPERABLE GLASS PARTITION PANEL
10 44 00.01	FIRE EXTINGUISHER CABINET – FULLY RECESSED
10 44 00.03	FIRE EXTINGUISHER WALL MOUNTED BRACKET
10 44 00.11	FIRE EXTINGUISHER
10 51 23.01	PHENOLIC LOCKER – RECESSED – TYPE 1
11 31 00.02	REFRIGERATOR – UNDER-COUNTER
12 24 00.01	ROLLER SHADE
12 24 00.11	BLACKOUT SHADE
12 24 00.12	BLACKOUT SHADE – ELECTRICALLY OPERATED
12 48 13.01	RECESSED ENTRANCE MAT – REFERENCE DRAWINGS FOR SIZE
22 00 00.01	SINK – SEE PLUMBING
22 00 00.03	WATER FOUNTAIN – SEE PLUMBING
27 40 00.01	LCD TV – SEE TECHNOLOGY

90% CONSTRUCTION DOCUMENTS

NOT FOR CONSTRUCTION

NORTH ARROW

KEYPLAN

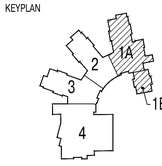

DRAWING NAME:
FIRST FLOOR PLAN ZONE 1

DRAWN BY: JMR/ MJR
REVIEWED BY: CLO
SCALE: As Noted
JOB NO.: 1403.00
DATE: July 25, 2016
DRAWING NUMBER: A1.11

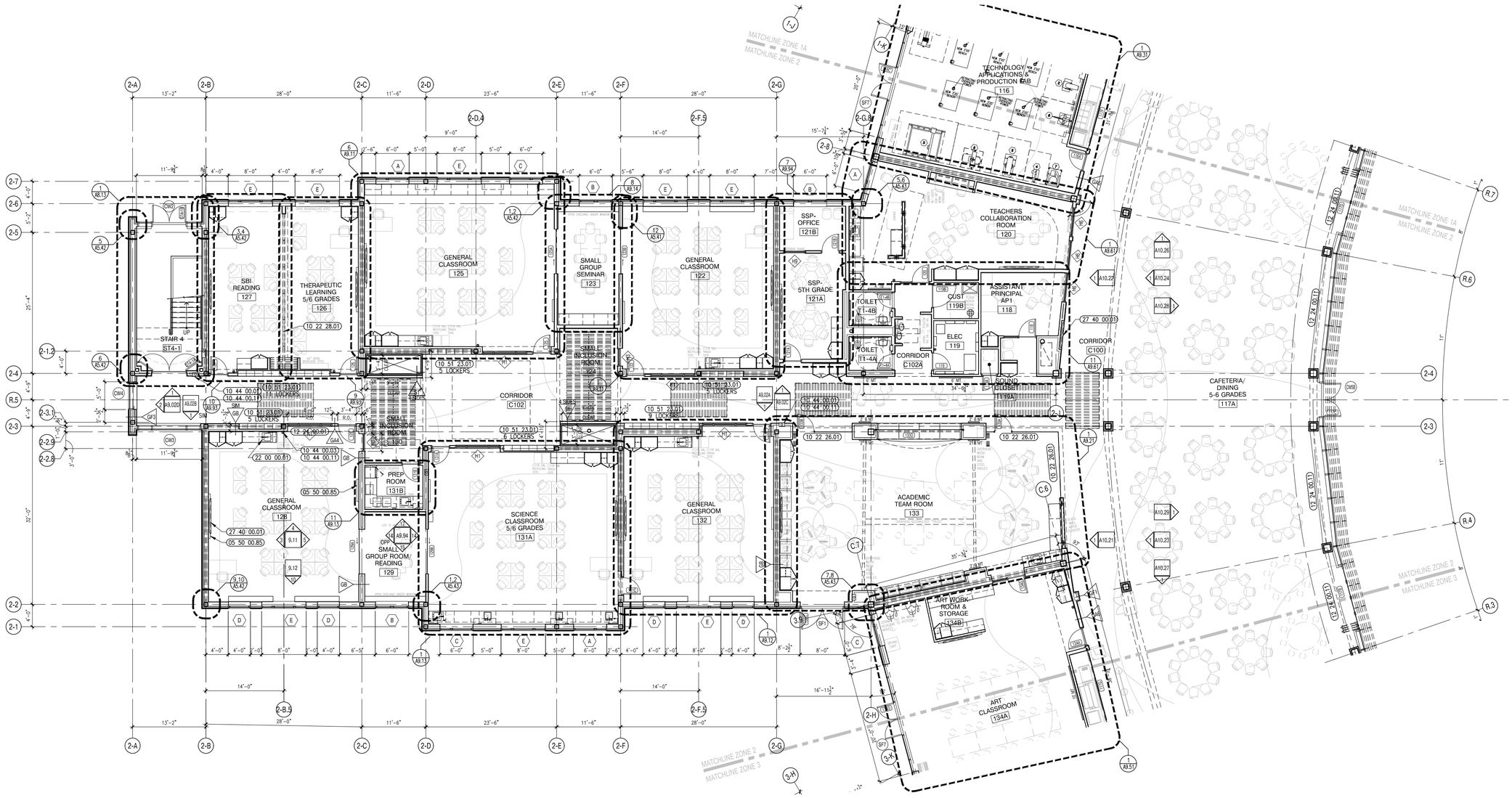

1 FIRST FLOOR PLAN - ZONE 2
1/8"=1'-0"

526 Boston Post Rd Wayland, MA
508.358.0790 www.ai3architects.com

BEVERLY MIDDLE SCHOOL

CABOT STREET
BEVERLY, MA 01915

Copyright © 2016 Ai3 Architects, LLC

KEYNOTE LEGEND: (REFERENCE SHEETS A0.01 & A0.02 FOR MASTER KEYNOTE LIST AND KEYNOTES NOT LISTED)

05	50	00.85	ALUMINUM MARKER TROUGH
10	22	26.01	INTERIOR OPERABLE GLASS PARTITION PANEL
10	22	28.01	FOLDING PANEL PARTITION
10	44	00.01	FIRE EXTINGUISHER CABINET – FULLY RECESSED
10	44	00.03	FIRE EXTINGUISHER WALL MOUNTED BRACKET
10	44	00.11	FIRE EXTINGUISHER
10	51	23.01	PHENOLIC LOCKER – RECESSED – TYPE 1
12	24	00.01	ROLLER SHADE
12	24	00.11	BLACKOUT SHADE
22	00	00.01	SINK – SEE PLUMBING
27	40	00.01	LCD TV – SEE TECHNOLOGY

90% CONSTRUCTION DOCUMENTS

NOT FOR CONSTRUCTION

NORTH ARROW

KEYPLAN

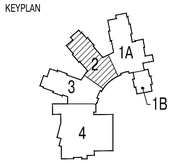

DRAWING NAME:

FIRST FLOOR PLAN ZONE 2

DRAWN BY: JMR/ MJR

REVIEWED BY: CLO

SCALE: As Noted

JOB NO.: 1403.00

DATE: July 25, 2016

DRAWING NUMBER: A1.12

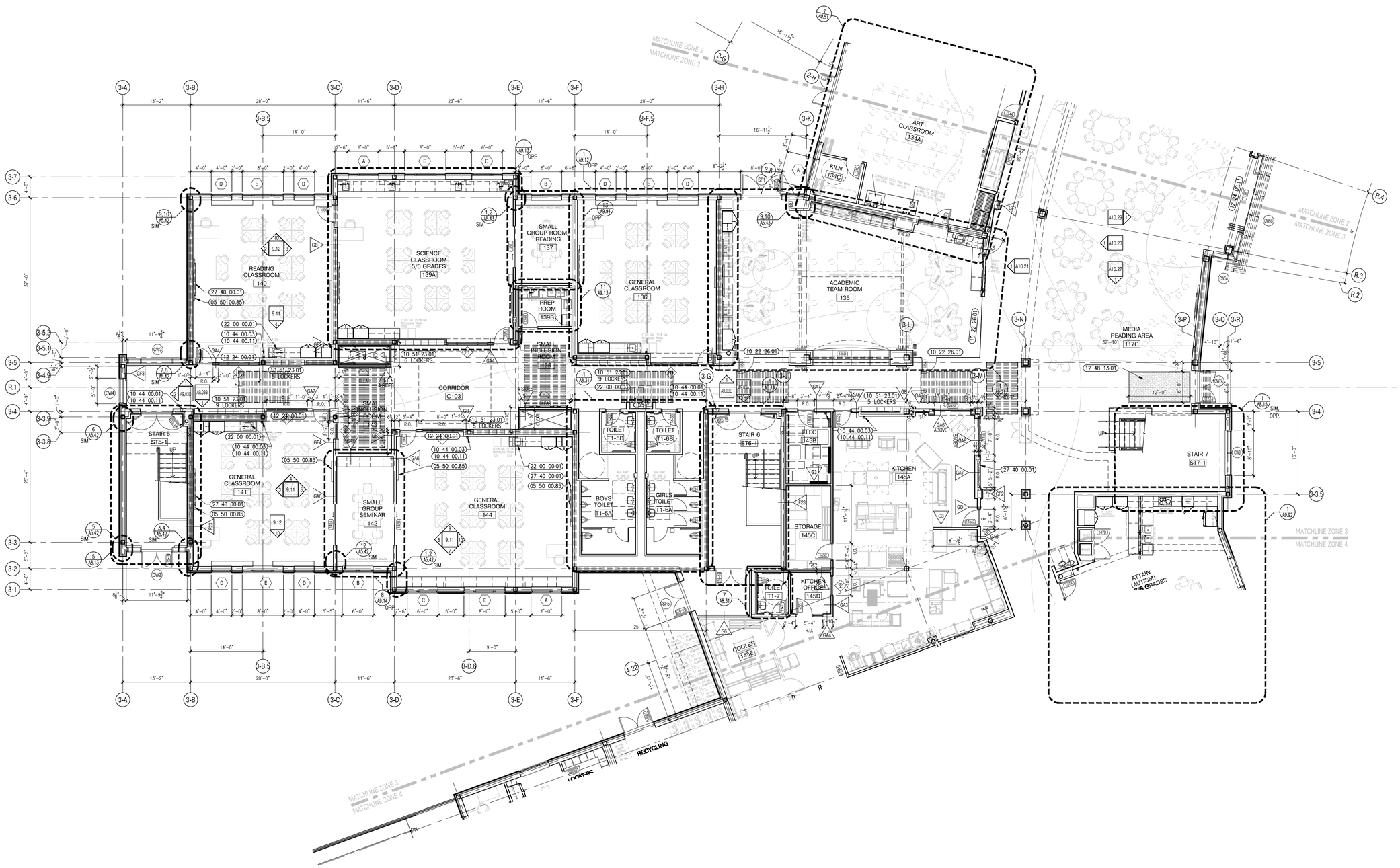

1 FIRST FLOOR PLAN - ZONE 3
1/8"=1'-0"

A13 architects
526 Boston Post Rd Wayland, MA
508.358.0790 www.a13architects.com

BEVERLY MIDDLE SCHOOL

CABOT STREET
BEVERLY, MA 01915

Copyright © 2016 A13 Architects, LLC

KEYNOTE LEGEND: (REFERENCE SHEETS A0.01 & A0.02 FOR MASTER KEYNOTE LIST AND KEYNOTES NOT LISTED)

05	50	00.85	ALUMINUM MARKER TROUGH
10	22	26.01	INTERIOR OPERABLE GLASS PARTITION PANEL
10	44	00.01	FIRE EXTINGUISHER CABINET – FULLY RECESSED
10	44	00.03	FIRE EXTINGUISHER WALL MOUNTED BRACKET
10	44	00.11	FIRE EXTINGUISHER
10	51	23.01	PHENOLIC LOCKER – RECESSED – TYPE 1
12	24	00.01	ROLLER SHADE
12	24	00.11	BLACKOUT SHADE
12	48	13.01	RECESSED ENTRANCE MAT – REFERENCE DRAWINGS FOR SIZE
22	00	00.01	SINK – SEE PLUMBING
22	00	00.03	WATER FOUNTAIN – SEE PLUMBING
27	40	00.01	LCD TV – SEE TECHNOLOGY

90% CONSTRUCTION DOCUMENTS

NOT FOR CONSTRUCTION

NORTH ARROW

KEYPLAN

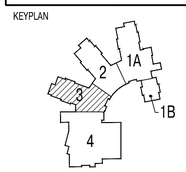

DRAWING NAME:

FIRST FLOOR PLAN ZONE 3

DRAWN BY:	JMR/ MJR
REVIEWED BY:	CLO
SCALE:	As Noted
JOB NO.:	1403.00
DATE:	July 25, 2016
DRAWING NUMBER:	A1.13

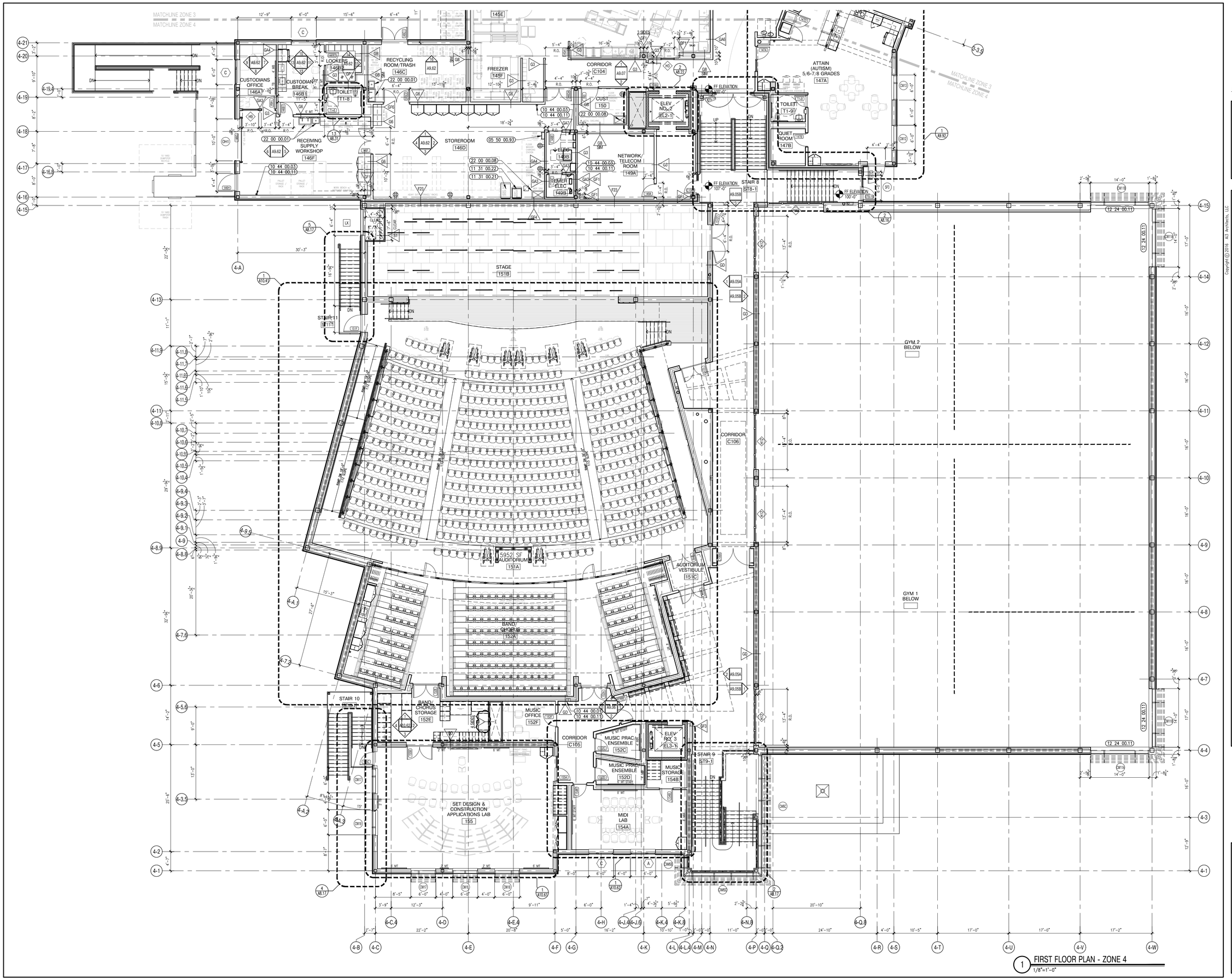

1 FIRST FLOOR PLAN - ZONE 4
1/8"=1'-0"

A13 architects
526 Boston Post Rd Wayland, MA
508.358.0790 www.a13architects.com

BEVERLY MIDDLE SCHOOL

CABOT STREET
BEVERLY, MA 01915

Copyright © 2016 A13 Architects, LLC

KEYNOTE LEGEND: (REFERENCE SHEETS A0.01 & A0.02 FOR MASTER KEYNOTE LIST AND KEYNOTES NOT LISTED)

05 50 00.93	ROOF ACCESS LADDER – INTERIOR
10 44 00.01	FIRE EXTINGUISHER CABINET – FULLY RECESSED
10 44 00.03	FIRE EXTINGUISHER WALL MOUNTED BRACKET
10 44 00.11	FIRE EXTINGUISHER
11 31 00.21	WASHER
11 31 00.22	DRYER
12 24 00.11	BLACKOUT SHADE
22 00 00.01	SINK – SEE PLUMBING
22 00 00.08	MOP RECEPTOR – SEE PLUMBING

90% CONSTRUCTION DOCUMENTS

NOT FOR CONSTRUCTION

NORTH ARROW

KEYPLAN

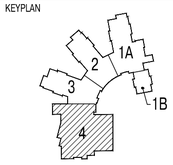

DRAWING NAME:

FIRST FLOOR PLAN ZONE 4

DRAWN BY:	RPM/ ETF
REVIEWED BY:	CLO
SCALE:	As Noted
JOB NO.:	1403.00
DATE:	July 25, 2016
DRAWING NUMBER:	A1.14

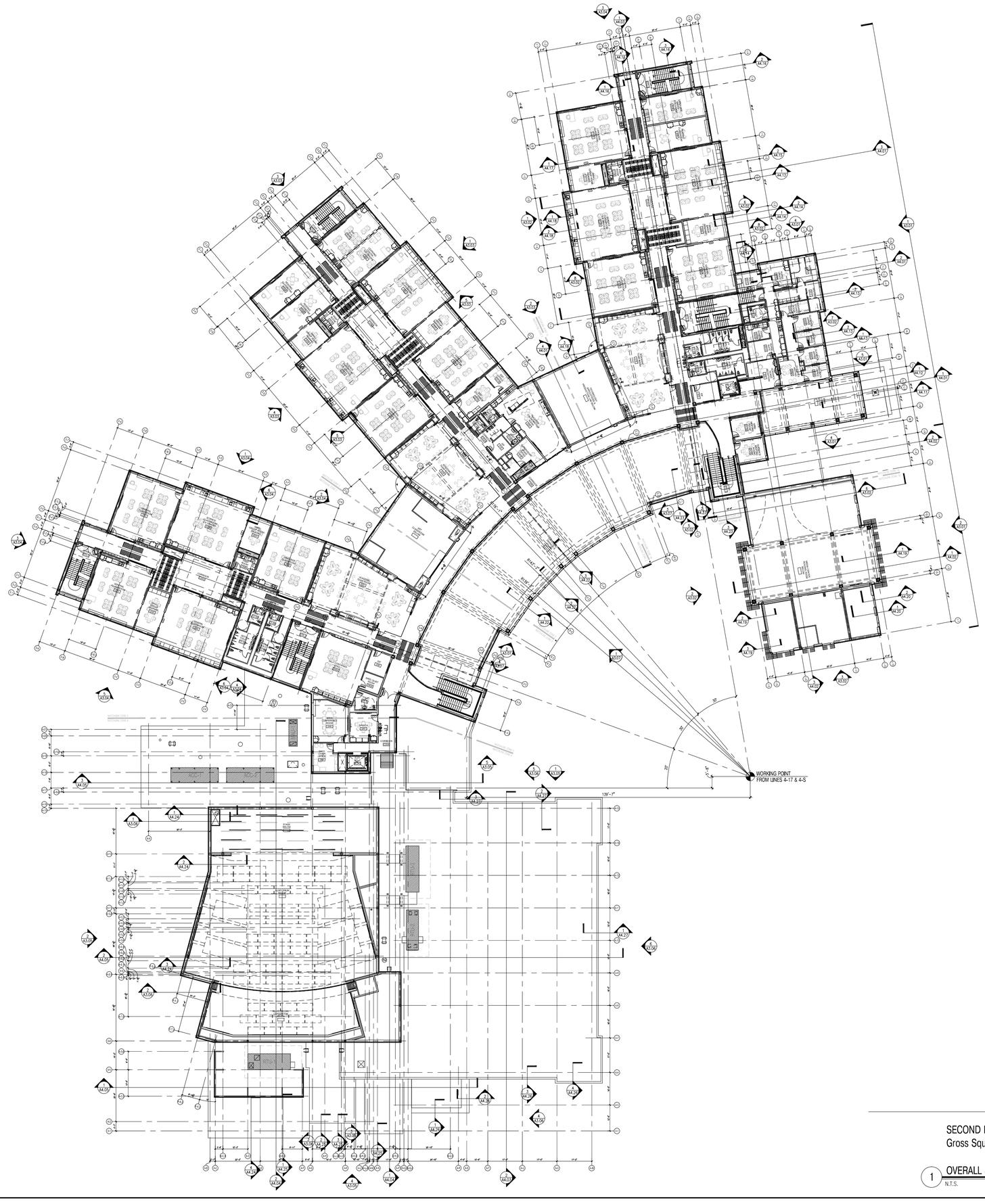

SECOND FLOOR PLAN
Gross Square Feet = 42,126 gsf

1 OVERALL SECOND FLOOR PLAN
N.T.S.

A13 architects
526 Boston Post Rd Wayland, MA
508.358.0790 www.a13architects.com

Copyright © 2016 A13 Architects, LLC

BEVERLY MIDDLE SCHOOL

CABOT STREET
BEVERLY, MA 01915

KEYNOTE LEGEND: (REFERENCE SHEETS A0.01 & A0.02 FOR MASTER KEYNOTE LIST AND KEYNOTES NOT LISTED)

GENERAL NOTES:

1. FINISHED SECOND FLOOR ELEVATION TO BE 114'-0" UNLESS NOTED OTHERWISE ON ZONE PLANS.

90% CONSTRUCTION DOCUMENTS

NOT FOR CONSTRUCTION

NORTH ARROW

KEYPLAN

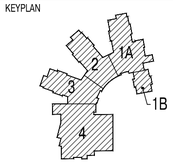

DRAWING NAME:
OVERALL SECOND FLOOR PLAN

DRAWN BY:	JMR
REVIEWED BY:	MB
SCALE:	As Noted
JOB NO.:	1403.00
DATE:	July 25, 2016
DRAWING NUMBER:	A1.20

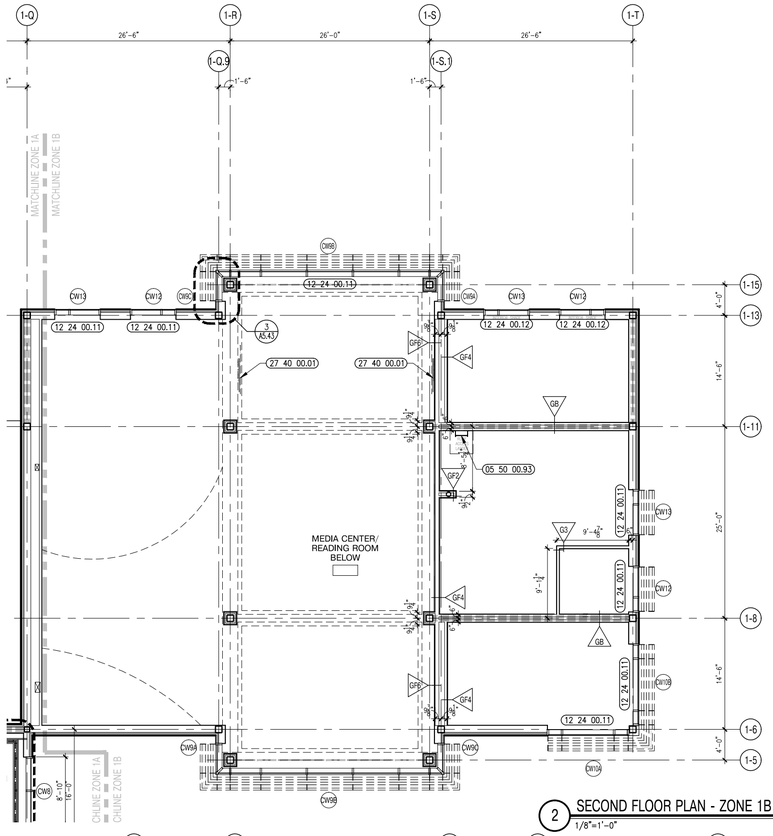

2 SECOND FLOOR PLAN - ZONE 1B
1/8"=1'-0"

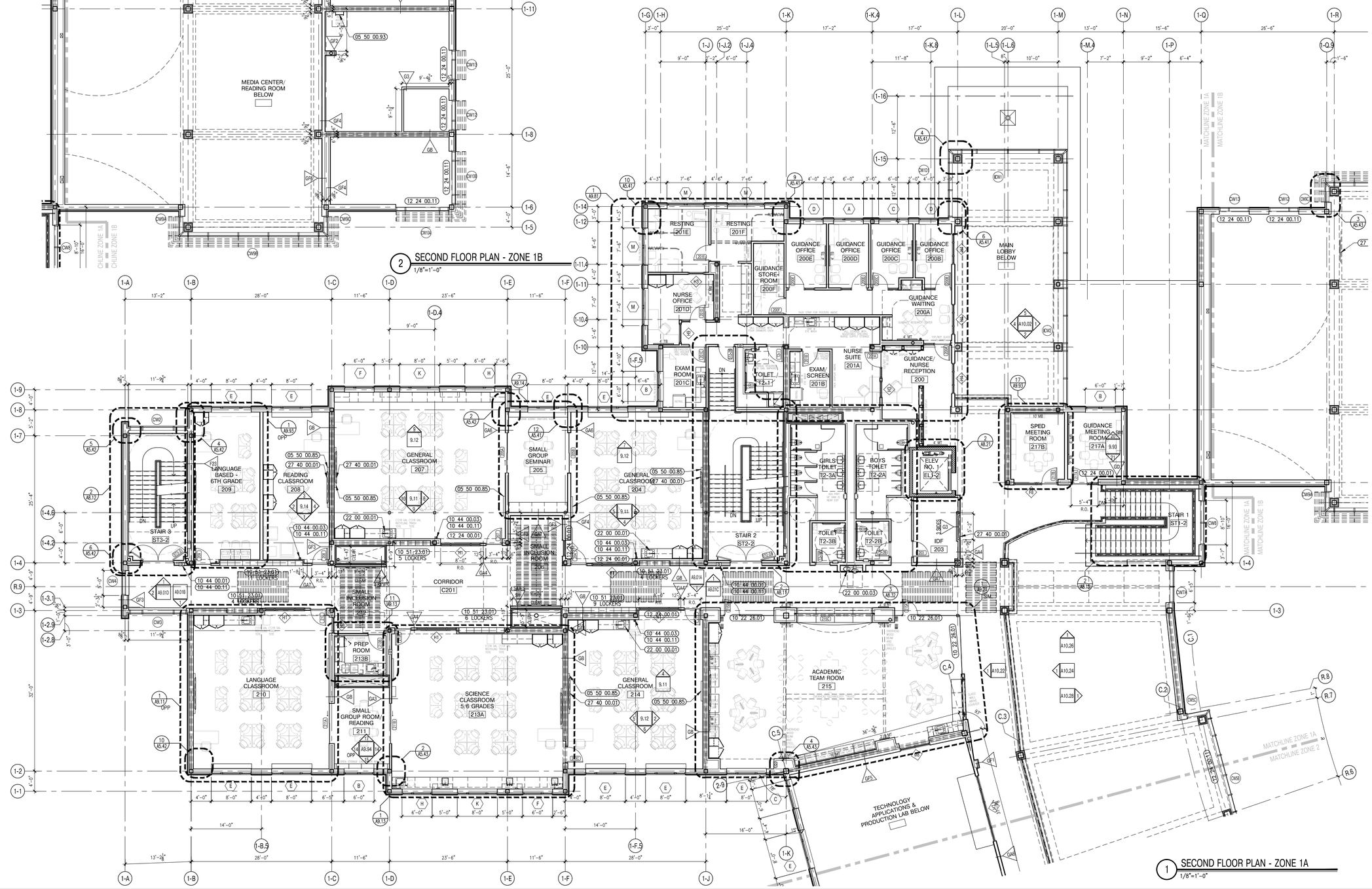

1 SECOND FLOOR PLAN - ZONE 1A
1/8"=1'-0"

A13 architects
526 Boston Post Rd Wayland, MA
508.358.0790 www.a13architects.com

BEVERLY MIDDLE SCHOOL

CABOT STREET
BEVERLY, MA 01915

Copyright © 2016 A13 Architects, LLC

KEYNOTE LEGEND: (REFERENCE SHEETS A0.01 & A0.02 FOR MASTER KEYNOTE LIST AND KEYNOTES NOT LISTED)

05 50 00.85	ALUMINUM MARKER TROUGH
05 50 00.83	ROOF ACCESS LADDER – INTERIOR
10 22 26.01	INTERIOR OPERABLE GLASS PARTITION PANEL
10 44 00.01	FIRE EXTINGUISHER CABINET – FULLY RECESSED
10 44 00.03	FIRE EXTINGUISHER WALL MOUNTED BRACKET
10 44 00.11	FIRE EXTINGUISHER
10 51 23.01	NOT USED
12 24 00.01	ROLLER SHADE
12 24 00.11	BLACKOUT SHADE
12 24 00.12	BLACKOUT SHADE – ELECTRICALLY OPERATED
22 00 00.01	SINK – SEE PLUMBING
22 00 00.03	WATER FOUNTAIN – SEE PLUMBING
27 40 00.01	LCD TV – SEE TECHNOLOGY

90% CONSTRUCTION DOCUMENTS

NOT FOR CONSTRUCTION

NORTH ARROW

KEYPLAN

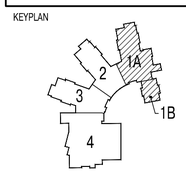

DRAWING NAME:
SECOND FLOOR PLAN ZONE 1

DRAWN BY:	JMR/ MJR
REVIEWED BY:	CLO
SCALE:	As Noted
JOB NO.:	1403.00
DATE:	July 25, 2016
DRAWING NUMBER:	A1.21

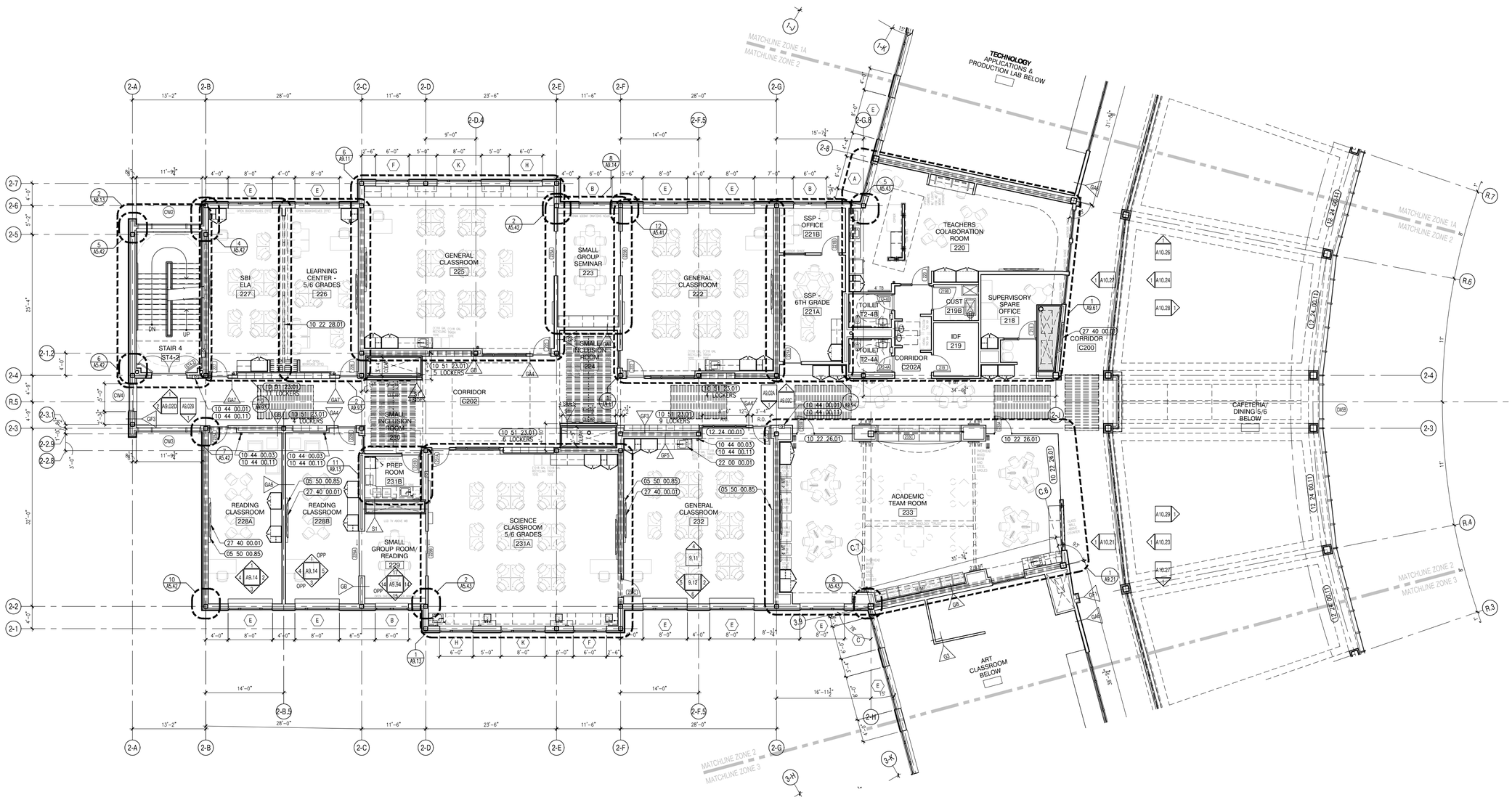

1 SECOND FLOOR PLAN - ZONE 2
1/8"=1'-0"

architects
526 Boston Post Rd Wayland, MA
508.358.0790 www.ai3architects.com

BEVERLY MIDDLE SCHOOL

CABOT STREET
BEVERLY, MA 01915

Copyright © 2016 AI3 Architects, LLC

KEYNOTE LEGEND: (REFERENCE SHEETS A0.01 & A0.02 FOR MASTER KEYNOTE LIST AND KEYNOTES NOT LISTED)

05 50 00.85	ALUMINUM MARKER TROUGH
10 22 26.01	INTERIOR OPERABLE GLASS PARTITION PANEL
10 22 28.01	FOLDING PANEL PARTITION
10 44 00.01	FIRE EXTINGUISHER CABINET – FULLY RECESSED
10 44 00.03	FIRE EXTINGUISHER WALL MOUNTED BRACKET
10 44 00.11	FIRE EXTINGUISHER
10 51 23.01	PHENOLIC LOCKER – RECESSED – TYPE 1
12 24 00.01	ROLLER SHADE
12 24 00.11	BLACKOUT SHADE
22 00 00.01	SINK – SEE PLUMBING
27 40 00.01	LCD TV – SEE TECHNOLOGY

90% CONSTRUCTION DOCUMENTS

NOT FOR CONSTRUCTION

NORTH ARROW

KEYPLAN

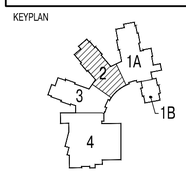

DRAWING NAME:
SECOND FLOOR PLAN ZONE 2

DRAWN BY:	JMR/ MJR
REVIEWED BY:	CLO
SCALE:	As Noted
JOB NO.:	1403.00
DATE:	July 25, 2016
DRAWING NUMBER:	A1.22

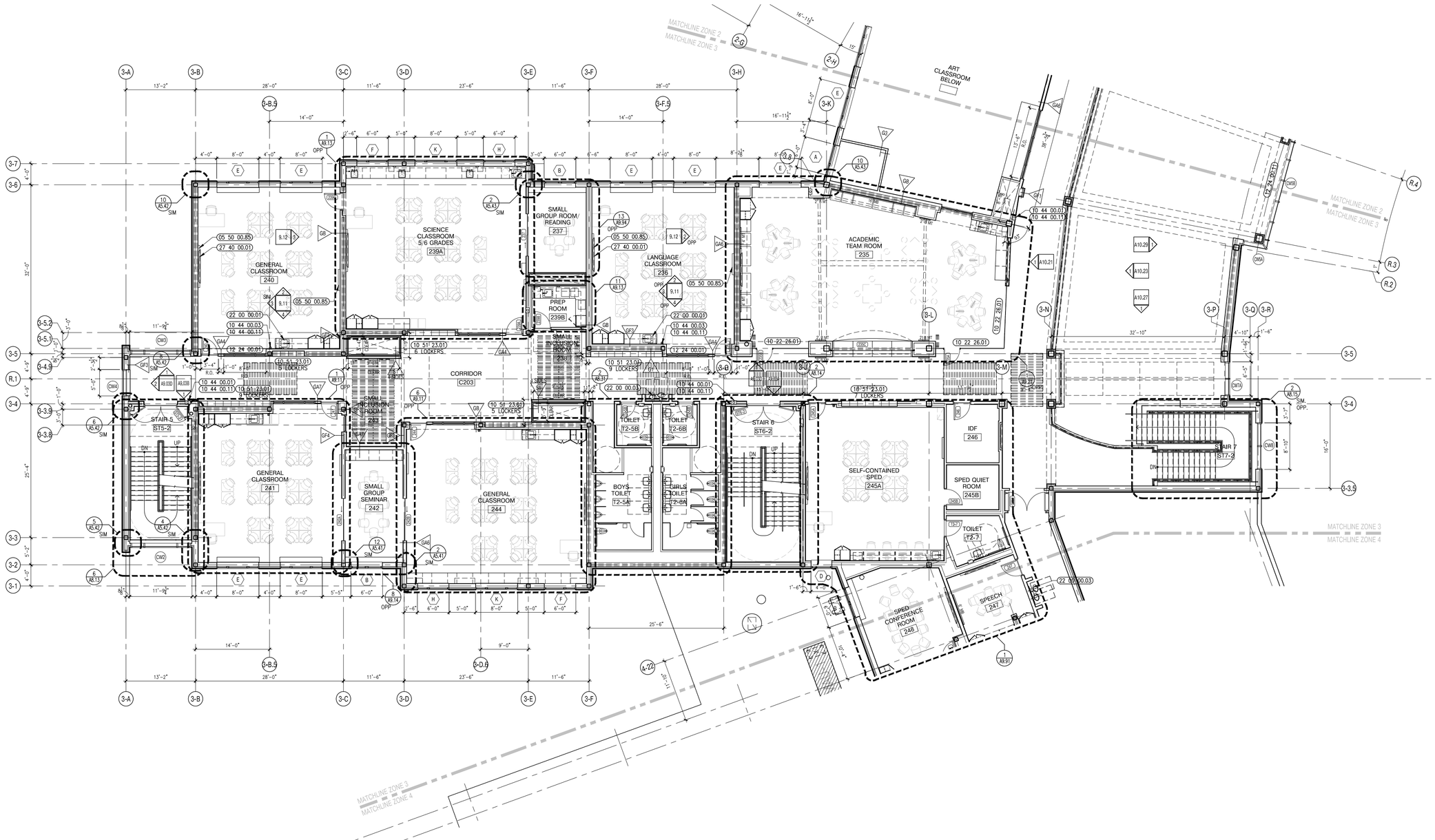

1 SECOND FLOOR PLAN - ZONE 3
1/8"=1'-0"

526 Boston Post Rd Wayland, MA
508.358.0790 www.ai3architects.com

BEVERLY MIDDLE SCHOOL

CABOT STREET
BEVERLY, MA 01915

Copyright © 2016 Ai3 Architects, LLC

KEYNOTE LEGEND: (REFERENCE SHEETS A0.01 & A0.02 FOR MASTER KEYNOTE LIST AND KEYNOTES NOT LISTED)

05 50 00.85	ALUMINUM MARKER TROUGH
10 22 26.01	INTERIOR OPERABLE GLASS PARTITION PANEL
10 44 00.01	FIRE EXTINGUISHER CABINET – FULLY RECESSED
10 44 00.03	FIRE EXTINGUISHER WALL MOUNTED BRACKET
10 44 00.11	FIRE EXTINGUISHER
10 51 23.01	PHENOLIC LOCKER – RECESSED – TYPE 1
12 24 00.01	ROLLER SHADE
12 24 00.11	BLACKOUT SHADE
22 00 00.01	SINK – SEE PLUMBING
22 00 00.03	WATER FOUNTAIN – SEE PLUMBING
27 40 00.01	LCD TV – SEE TECHNOLOGY

90% CONSTRUCTION DOCUMENTS

NOT FOR CONSTRUCTION

NORTH ARROW

KEYPLAN

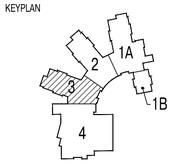

DRAWING NAME:

SECOND FLOOR PLAN ZONE 3

DRAWN BY:	JMR/ MJR
REVIEWED BY:	CLO
SCALE:	As Noted
JOB NO.:	1403.00
DATE:	July 25, 2016
DRAWING NUMBER:	A1.23

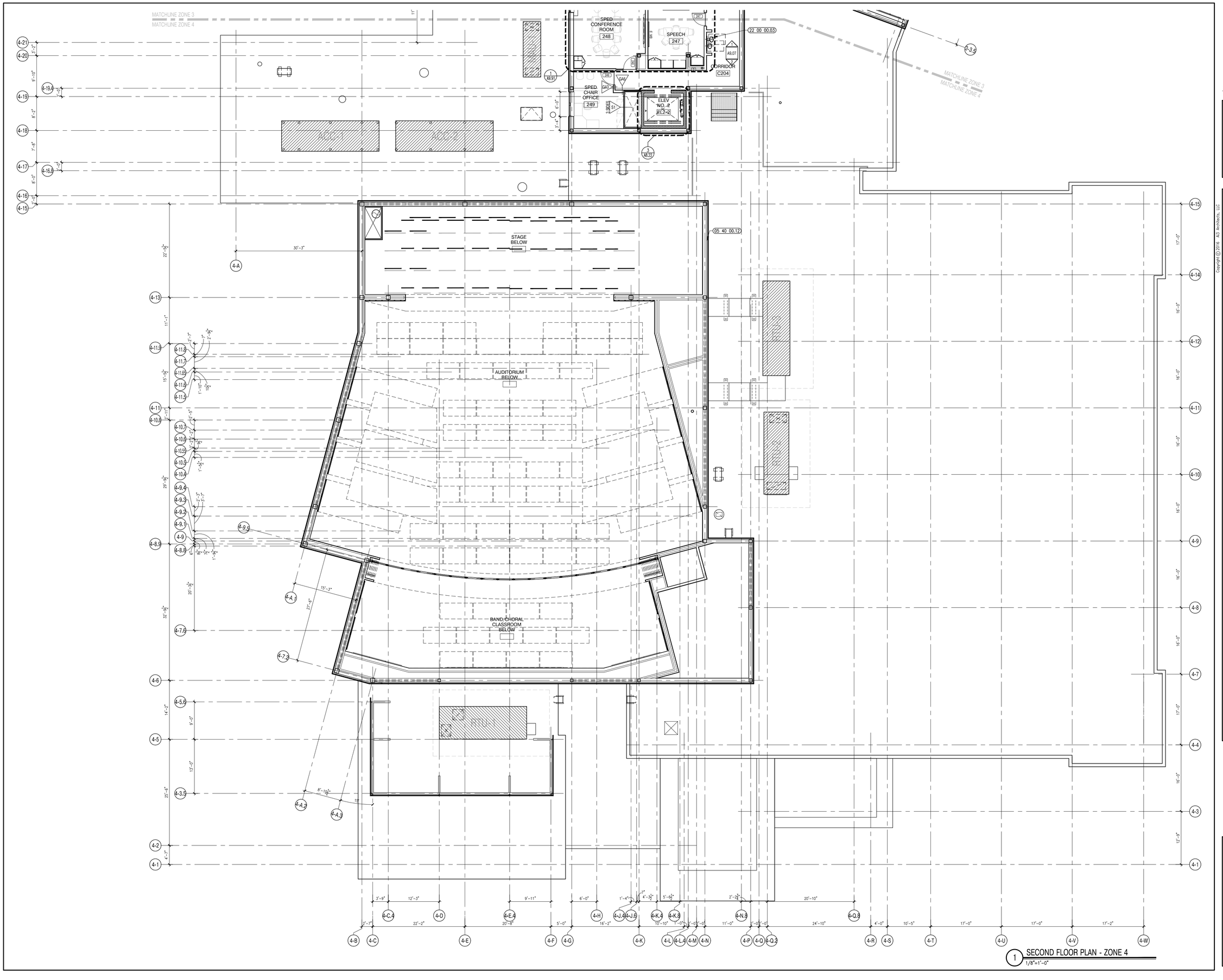

1 SECOND FLOOR PLAN - ZONE 4
1/8"=1'-0"

architects
526 Boston Post Rd Wayland, MA
508.358.0790 www.ai3architects.com

BEVERLY MIDDLE SCHOOL

CABOT STREET
BEVERLY, MA 01915

Copyright © 2016 A13 Architects, LLC

KEYNOTE LEGEND: (REFERENCE SHEETS A0.01 & A0.02 FOR MASTER KEYNOTE LIST AND KEYNOTES NOT LISTED)

05 40 00.12 STEEL STUDS – 12 INCH – 16 INCHES O.C. MAX
22 00 00.03 WATER FOUNTAIN – SEE PLUMBING

90% CONSTRUCTION DOCUMENTS

NOT FOR CONSTRUCTION

NORTH ARROW

KEYPLAN

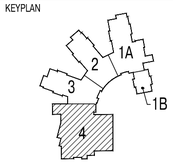

DRAWING NAME:

SECOND FLOOR PLAN ZONE 4

DRAWN BY:	JMR
REVIEWED BY:	MB
SCALE:	As Noted
JOB NO.:	1403.00
DATE:	July 25, 2016
DRAWING NUMBER:	A1.24

THIRD FLOOR PLAN
Gross Square Feet = 49,004 gsf

1 OVERALL THIRD FLOOR PLAN
N.T.S.

A13 architects
526 Boston Post Rd Wayland, MA
508.358.0790 www.a13architects.com

BEVERLY MIDDLE SCHOOL

CABOT STREET
BEVERLY, MA 01915

Copyright © 2016 A13 Architects, LLC

KEYNOTE LEGEND: (REFERENCE SHEETS A0.01 & A0.02 FOR MASTER KEYNOTE LIST AND KEYNOTES NOT LISTED)

GENERAL NOTES:

1. FINISHED THIRD FLOOR ELEVATION TO BE 128'-0" UNLESS NOTED OTHERWISE ON ZONE PLANS.

90% CONSTRUCTION DOCUMENTS

NOT FOR CONSTRUCTION

NORTH ARROW

KEYPLAN

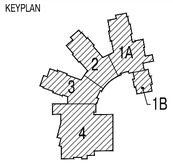

DRAWING NAME:

OVERALL THIRD FLOOR PLAN

DRAWN BY:	JMR
REVIEWED BY:	MB
SCALE:	As Noted
JOB NO.:	1403.00
DATE:	July 25, 2016
DRAWING NUMBER:	A1.30

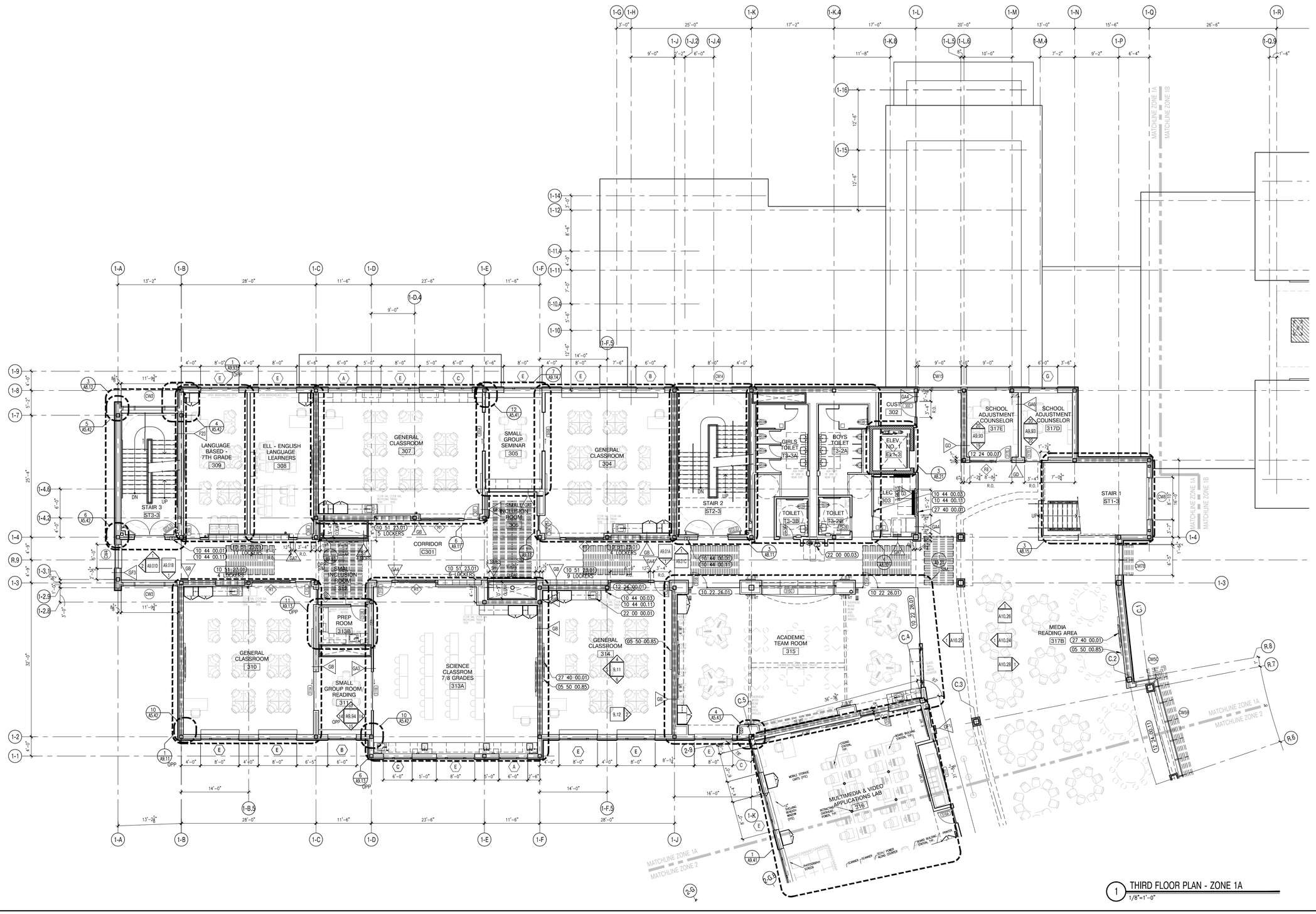

1 THIRD FLOOR PLAN - ZONE 1A
1/8"=1'-0"

526 Boston Post Rd Wayland, MA
508.358.0790 www.ai3architects.com

BEVERLY MIDDLE SCHOOL

CABOT STREET
BEVERLY, MA 01915

Copyright © 2016 Ai3 Architects, LLC

KEYNOTE LEGEND: (REFERENCE SHEETS A0.01 & A0.02 FOR MASTER KEYNOTE LIST AND KEYNOTES NOT LISTED)

05	50 00.85	ALUMINUM MARKER TROUGH
10	22 26.01	INTERIOR OPERABLE GLASS PARTITION PANEL
10	44 00.01	FIRE EXTINGUISHER CABINET – FULLY RECESSED
10	44 00.03	FIRE EXTINGUISHER WALL MOUNTED BRACKET
10	44 00.11	FIRE EXTINGUISHER
10	51 23.01	PHENOLIC LOCKER – RECESSED – TYPE 1
12	24 00.01	ROLLER SHADE
12	24 00.11	BLACKOUT SHADE
22	00 00.01	SINK – SEE PLUMBING
22	00 00.03	WATER FOUNTAIN – SEE PLUMBING
27	40 00.01	LCD TV – SEE TECHNOLOGY

90% CONSTRUCTION DOCUMENTS

NOT FOR CONSTRUCTION

NORTH ARROW

KEYPLAN

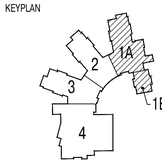

DRAWING NAME:

THIRD FLOOR PLAN ZONE 1

DRAWN BY:	JMR/ MJR
REVIEWED BY:	CLO
SCALE:	As Noted
JOB NO.:	1403.00
DATE:	July 25, 2016
DRAWING NUMBER:	A1.31

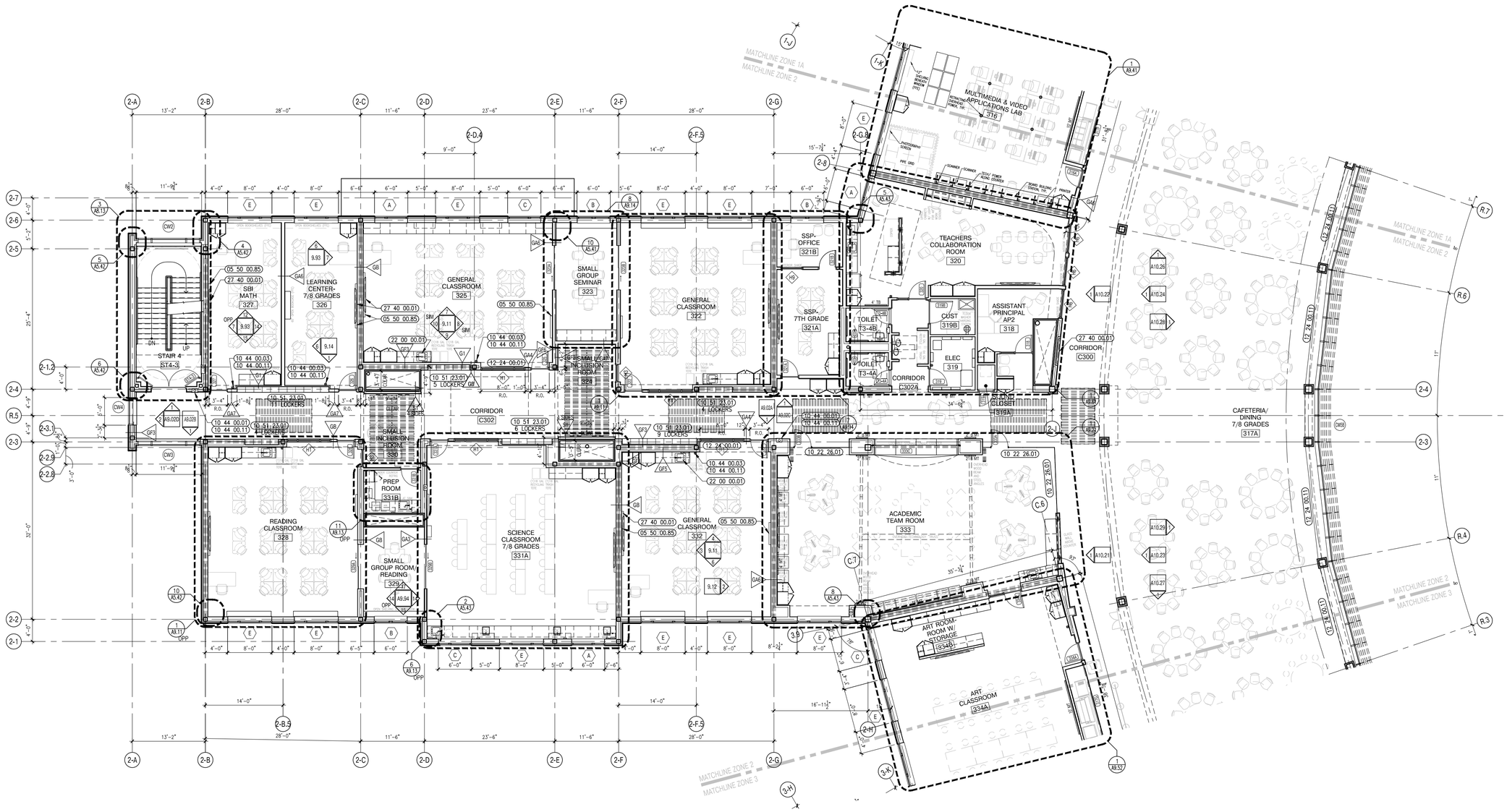

1 THIRD FLOOR PLAN - ZONE 2
1/8"=1'-0"

526 Boston Post Rd Wayland, MA
508.358.0790 www.ai3architects.com

BEVERLY MIDDLE SCHOOL

CABOT STREET
BEVERLY, MA 01915

Copyright © 2016 Ai3 Architects, LLC

KEYNOTE LEGEND: (REFERENCE SHEETS A0.01 & A0.02 FOR MASTER KEYNOTE LIST AND KEYNOTES NOT LISTED)

05 50 00.85	ALUMINUM MARKER TROUGH
10 22 26.01	INTERIOR OPERABLE GLASS PARTITION PANEL
10 44 00.01	FIRE EXTINGUISHER CABINET – FULLY RECESSED
10 44 00.03	FIRE EXTINGUISHER WALL MOUNTED BRACKET
10 44 00.11	FIRE EXTINGUISHER
10 51 23.01	PHENOLIC LOCKER – RECESSED – TYPE 1
12 24 00.01	ROLLER SHADE
12 24 00.11	BLACKOUT SHADE
22 00 00.01	SINK – SEE PLUMBING
27 40 00.01	LCD TV – SEE TECHNOLOGY

90% CONSTRUCTION DOCUMENTS

NOT FOR CONSTRUCTION

NORTH ARROW

KEYPLAN

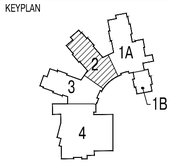

DRAWING NAME:

THIRD FLOOR PLAN ZONE 2

DRAWN BY:	JMR/ MJR
REVIEWED BY:	CLO
SCALE:	As Noted
JOB NO.:	1403.00
DATE:	July 25, 2016
DRAWING NUMBER:	A1.32

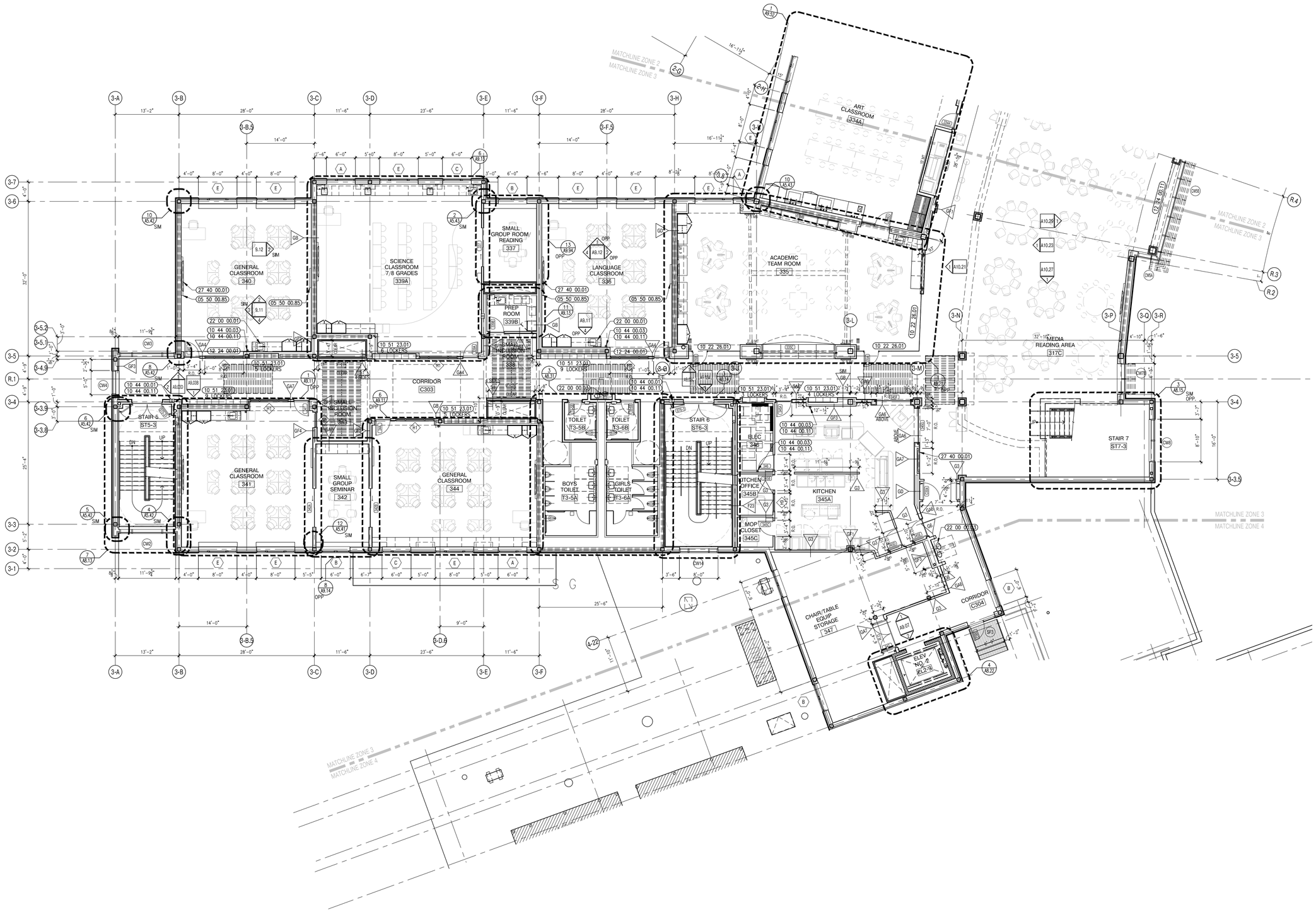

1 THIRD FLOOR PLAN - ZONE 3 AND PARTIAL ZONE 4
1/8"=1'-0"

A13 architects
526 Boston Post Rd Wayland, MA
508.358.0790 www.a13architects.com

BEVERLY MIDDLE SCHOOL

CABOT STREET
BEVERLY, MA 01915

Copyright © 2016 A13 Architects, LLC

KEYNOTE LEGEND: (REFERENCE SHEETS A0.01 & A0.02 FOR MASTER KEYNOTE LIST AND KEYNOTES NOT LISTED)

05 50 00.85	ALUMINUM MARKER TROUGH
10 22 26.01	INTERIOR OPERABLE GLASS PARTITION PANEL
10 44 00.01	FIRE EXTINGUISHER CABINET – FULLY RECESSED
10 44 00.03	FIRE EXTINGUISHER WALL MOUNTED BRACKET
10 44 00.11	FIRE EXTINGUISHER
10 51 23.01	PHENOLIC LOCKER – RECESSED – TYPE 1
12 24 00.01	ROLLER SHADE
12 24 00.11	BLACKOUT SHADE
22 00 00.01	SINK – SEE PLUMBING
22 00 00.03	WATER FOUNTAIN – SEE PLUMBING
27 40 00.01	LCD TV – SEE TECHNOLOGY

90% CONSTRUCTION DOCUMENTS

NOT FOR CONSTRUCTION

NORTH ARROW

KEYPLAN

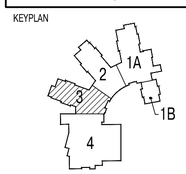

DRAWING NAME:

THIRD FLOOR PLAN ZONE 3 AND PARTIAL ZONE 4

DRAWN BY:	JMR/ MJR
REVIEWED BY:	CLO
SCALE:	As Noted
JOB NO.:	1403.00
DATE:	July 25, 2016
DRAWING NUMBER:	A1.33

FOURTH FLOOR PLAN
Gross Square Feet = 35,209 gsf

1 OVERALL FOURTH FLOOR PLAN
N.T.S.

A13 architects
526 Boston Post Rd Wayland, MA
508.358.0790 www.a13architects.com

BEVERLY MIDDLE SCHOOL

CABOT STREET
BEVERLY, MA 01915

Copyright © 2016 A13 Architects, LLC

KEYNOTE LEGEND: (REFERENCE SHEETS A0.01 & A0.02 FOR MASTER KEYNOTE LIST AND KEYNOTES NOT LISTED)

GENERAL NOTES:

1. FINISHED FOURTH FLOOR ELEVATION TO BE 142'-0" UNLESS NOTED OTHERWISE ON ZONE PLANS.

90% CONSTRUCTION DOCUMENTS

NOT FOR CONSTRUCTION

NORTH ARROW

KEYPLAN

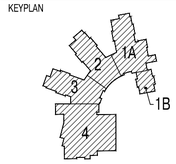

DRAWING NAME:
OVERALL FOURTH FLOOR PLAN

DRAWN BY:	JMR
REVIEWED BY:	MB
SCALE:	As Noted
JOB NO.:	1403.00
DATE:	July 25, 2016
DRAWING NUMBER:	A1.40

526 Boston Post Rd Wayland, MA
508.358.0790 www.a13architects.com

BEVERLY MIDDLE SCHOOL

CABOT STREET
BEVERLY, MA 01915

Copyright © 2016 A13 Architects, LLC

KEYNOTE LEGEND: (REFERENCE SHEETS A0.01 & A0.02 FOR MASTER KEYNOTE LIST AND KEYNOTES NOT LISTED)

05	50	00.85	ALUMINUM MARKER TROUGH
10	22	26.01	INTERIOR OPERABLE GLASS PARTITION PANEL
10	44	00.01	FIRE EXTINGUISHER CABINET – FULLY RECESSED
10	44	00.03	FIRE EXTINGUISHER WALL MOUNTED BRACKET
10	44	00.11	FIRE EXTINGUISHER
10	51	23.01	PHENOLIC LOCKER – RECESSED – TYPE 1
12	24	00.01	ROLLER SHADE
12	24	00.11	BLACKOUT SHADE
22	00	00.03	WATER FOUNTAIN – SEE PLUMBING
27	40	00.01	LCD TV – SEE TECHNOLOGY

90% CONSTRUCTION DOCUMENTS

NOT FOR CONSTRUCTION

NORTH ARROW

KEYPLAN

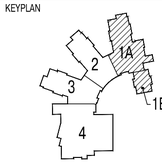

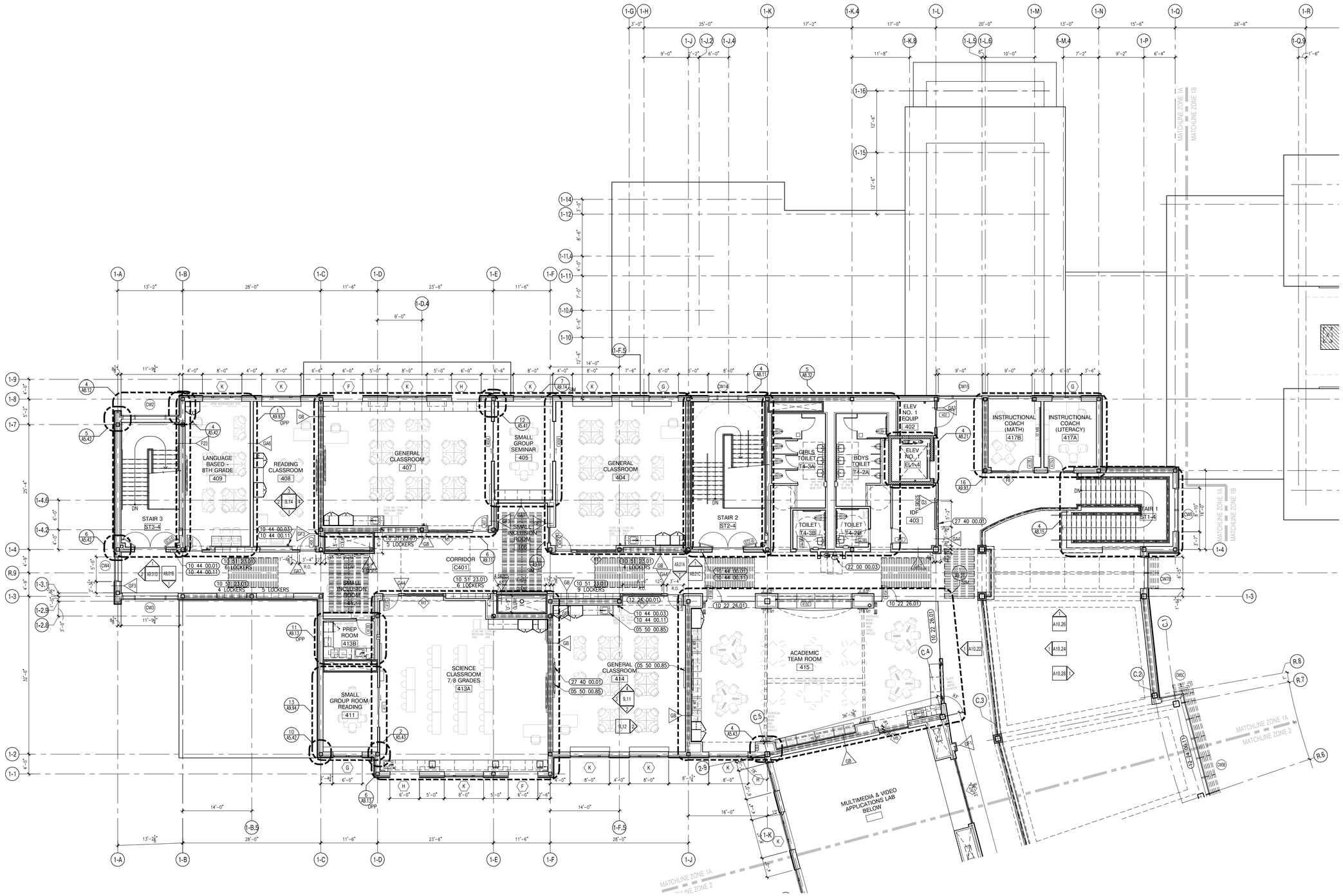

1 FOURTH FLOOR PLAN - ZONE 1A
1/8"=1'-0"

DRAWING NAME:

FOURTH FLOOR PLAN ZONE 1

DRAWN BY:	JMR/ MJR
REVIEWED BY:	CLO
SCALE:	As Noted
JOB NO.:	1403.00
DATE:	July 25, 2016
DRAWING NUMBER:	A1.41

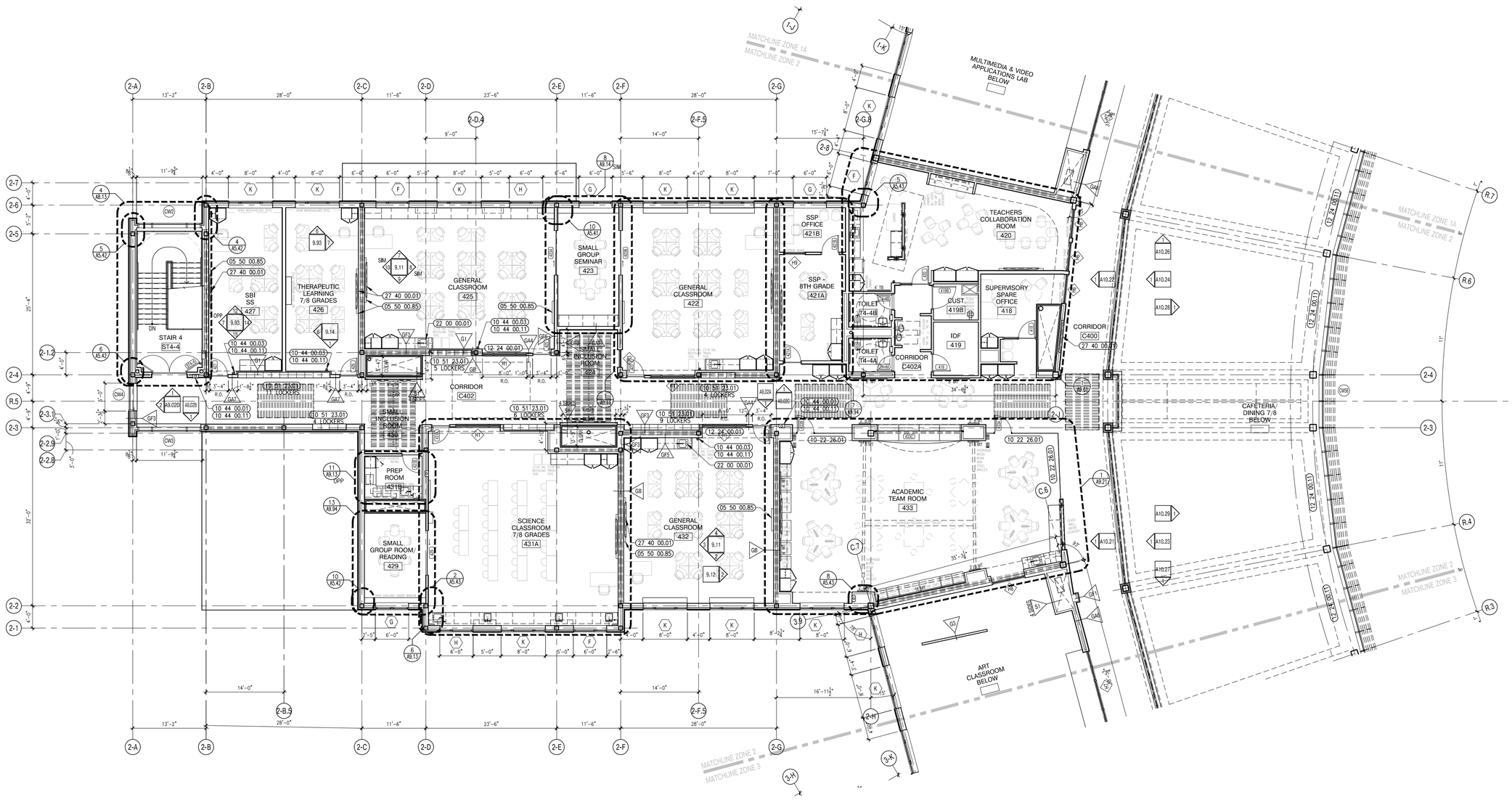

1 FOURTH FLOOR PLAN - ZONE 2
1/8"=1'-0"

A13 architects
526 Boston Post Rd Wayland, MA
508.358.0790 www.a13architects.com

BEVERLY MIDDLE SCHOOL

CABOT STREET
BEVERLY, MA 01915

Copyright © 2016 A13 Architects, LLC

KEYNOTE LEGEND: (REFERENCE SHEETS A0.01 & A0.02 FOR MASTER KEYNOTE LIST AND KEYNOTES NOT LISTED)

05 50 00.85	ALUMINUM MARKER TROUGH
10 22 26.01	INTERIOR OPERABLE GLASS PARTITION PANEL
10 44 00.01	FIRE EXTINGUISHER CABINET – FULLY RECESSED
10 44 00.03	FIRE EXTINGUISHER WALL MOUNTED BRACKET
10 44 00.11	FIRE EXTINGUISHER
10 51 23.01	PHENOLIC LOCKER – RECESSED – TYPE 1
12 24 00.01	ROLLER SHADE
12 24 00.11	BLACKOUT SHADE
22 00 00.01	SINK – SEE PLUMBING
27 40 00.01	LCD TV – SEE TECHNOLOGY

90% CONSTRUCTION DOCUMENTS

NOT FOR CONSTRUCTION

NORTH ARROW

KEYPLAN

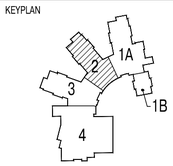

DRAWING NAME:

FOURTH FLOOR PLAN ZONE 2

DRAWN BY:	JMR/ MJR
REVIEWED BY:	CLO
SCALE:	As Noted
JOB NO.:	1403.00
DATE:	July 25, 2016
DRAWING NUMBER:	A1.42

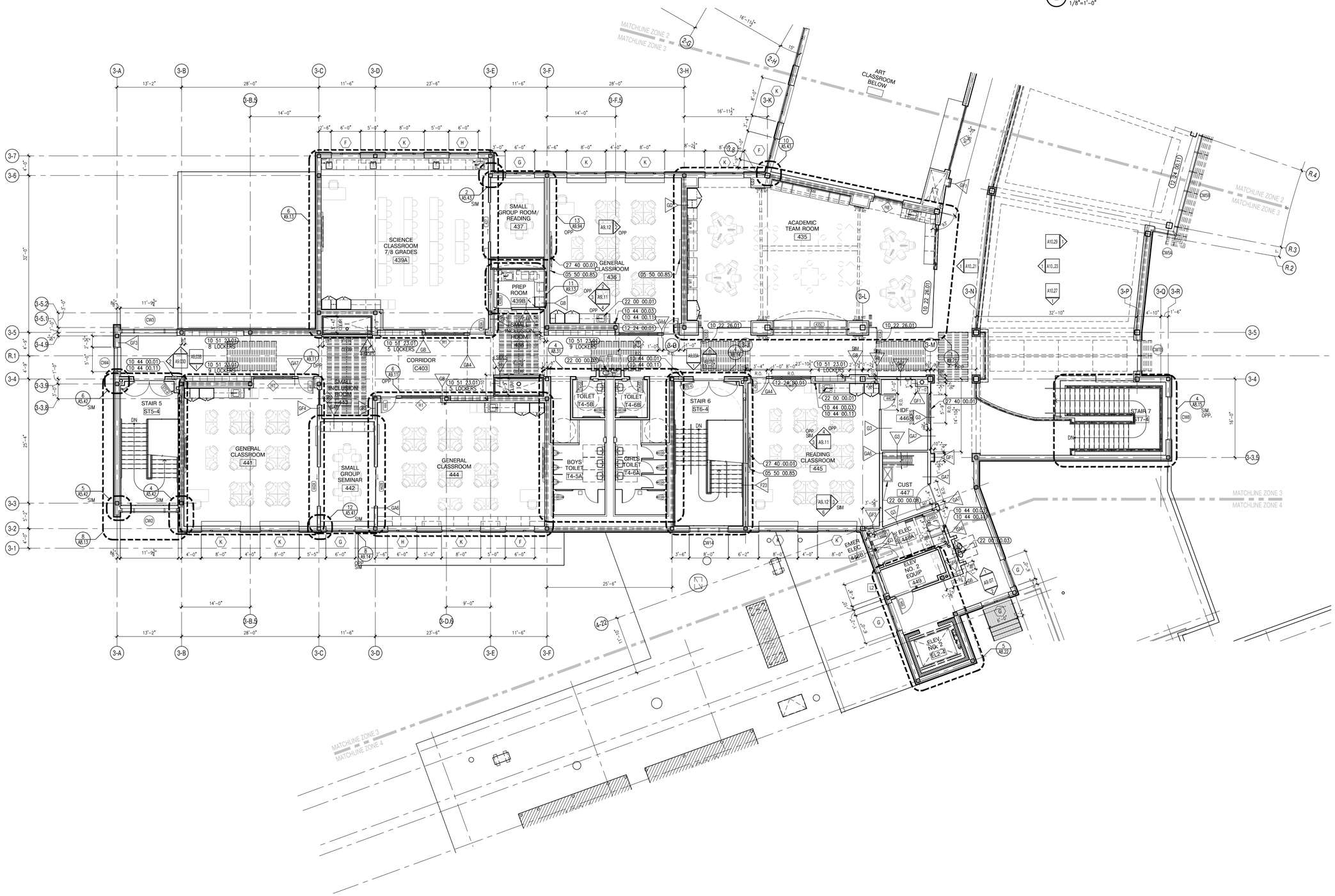

1 FOURTH FLOOR PLAN - ZONE 3 AND PARTIAL ZONE 4
1/8"=1'-0"

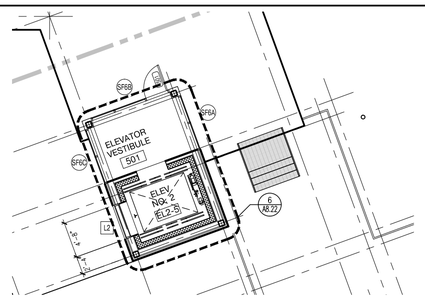

2 ELEVATOR PENTHOUSE LEVEL
1/8"=1'-0"

Ai3 architects
526 Boston Post Rd Wayland, MA
508.358.0790 www.ai3architects.com

BEVERLY MIDDLE SCHOOL

CABOT STREET
BEVERLY, MA 01915

Copyright © 2016 Ai3 Architects, LLC

KEYNOTE LEGEND: (REFERENCE SHEETS A0.01 & A0.02 FOR MASTER KEYNOTE LIST AND KEYNOTES NOT LISTED)

05 50 00.85	ALUMINUM MARKER TROUGH
10 22 26.01	INTERIOR OPERABLE GLASS PARTITION PANEL
10 44 00.01	FIRE EXTINGUISHER CABINET – FULLY RECESSED
10 44 00.03	FIRE EXTINGUISHER WALL MOUNTED BRACKET
10 44 00.11	FIRE EXTINGUISHER
10 51 23.01	PHENOLIC LOCKER – RECESSED – TYPE 1
12 24 00.01	ROLLER SHADE
12 24 00.11	BLACKOUT SHADE
22 00 00.01	SINK – SEE PLUMBING
22 00 00.03	WATER FOUNTAIN – SEE PLUMBING
22 00 00.08	MOP RECEPTOR – SEE PLUMBING
27 40 00.01	LCD TV – SEE TECHNOLOGY

90% CONSTRUCTION DOCUMENTS

NOT FOR CONSTRUCTION

NORTH ARROW

KEYPLAN

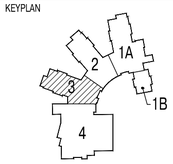

DRAWING NAME:

FOURTH FLOOR PLAN ZONE 3 AND PARTIAL ZONE 4

DRAWN BY:	JMR/ MJR
REVIEWED BY:	CLO
SCALE:	As Noted
JOB NO.:	1403.00
DATE:	July 25, 2016
DRAWING NUMBER:	A1.43

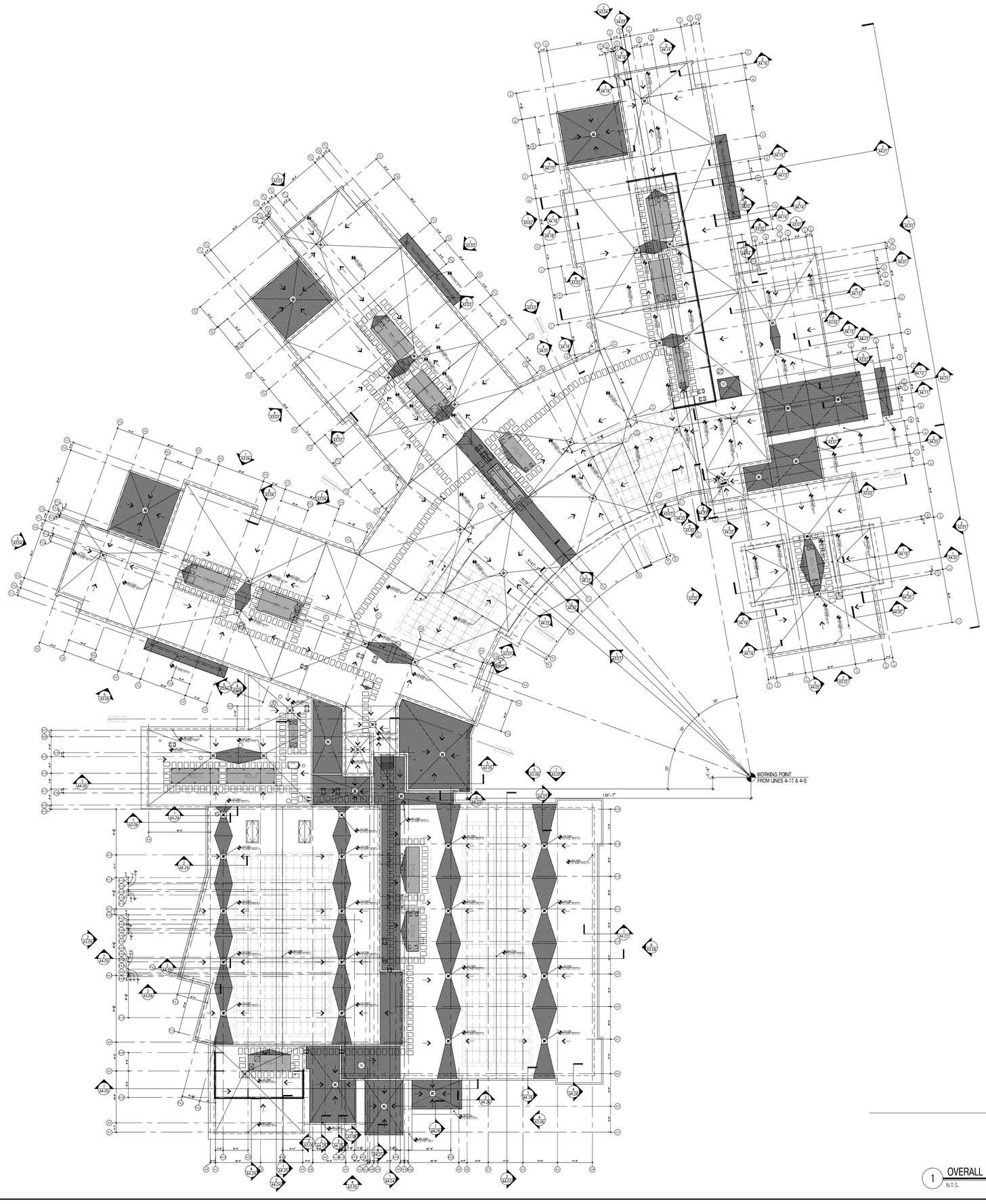

1 OVERALL ROOF PLAN
N.T.S.

526 Boston Post Rd Wayland, MA
508.358.0790 www.ai3architects.com

BEVERLY MIDDLE SCHOOL

CABOT STREET
BEVERLY, MA 01915

Copyright © 2016 Ai3 Architects, LLC

KEYNOTE LEGEND: (REFERENCE SHEETS A0.01 & A0.02 FOR MASTER KEYNOTE LIST AND KEYNOTES NOT LISTED)

ROOF LEGEND

- TAPERED RIGID ROOF INSULATION – SLOPE 1/4" PER FOOT MIN.
- ROOF DRAIN LOCATION– SEE DETAIL 1/A5.21
- EXHAUST FAN LOCATION – REFER TO MECHANICAL DRAWINGS FOR FURTHER INFORMATION
- MECHANICAL UNIT – REFER TO MECHANICAL DRAWINGS FOR FURTHER INFORMATION
- ROOF MOUNTED MECHANICAL UNIT LOCATION – REFER TO MECHANICAL FOR FURTHER INFORMATION
- 24x36 WALK BOARDS (07 54 19.80)

GENERAL NOTES:

1. REFER TO MANUFACTURERS STANDARD ROOFING REQUIREMENTS TO MEET THE MINIMUM 20 YEAR WARRANTY SPECIFIED.
2. REFER TO DRAWING A5.21 FOR ALL TYPICAL DETAIL ROOF DETAILS. ROOF DETAILS APPLY TO ALL CONDITIONS, INCLUDING THOSE NOT SHOWN ON ROOF PLAN. REFER TO MECHANICAL, PLUMBING, FIRE PROTECTION, AND ELECTRICAL DRAWINGS/SPECIFICATIONS FOR ADDITIONAL INFORMATION AND LOCATIONS.
3. STEEL ROOF DECKS, UNLESS NOTED TO BE FLAT OR DETAILED OTHERWISE, ARE INTENDED TO SLOPE 1/4" PER FOOT MINIMUM TO DRAIN/LOWPOINTS. SLOPE MAYBE BE GREATER THAN 1/4" PER FOOT DUE TO FINAL STEEL ELEVATIONS.

90% CONSTRUCTION DOCUMENTS

NOT FOR CONSTRUCTION

NORTH ARROW

KEYPLAN

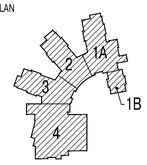

DRAWING NAME:

OVERALL ROOF PLAN

DRAWN BY:	JMR
REVIEWED BY:	MB
SCALE:	As Noted
JOB NO.:	1403.00
DATE:	July 25, 2016
DRAWING NUMBER:	A1.50

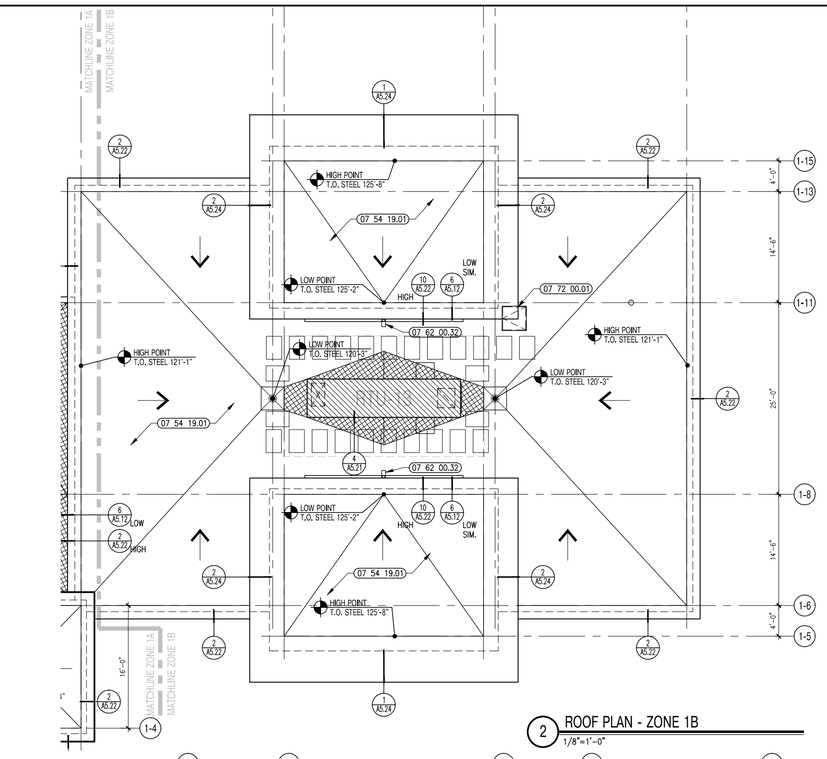

2 ROOF PLAN - ZONE 1B
1/8"=1'-0"

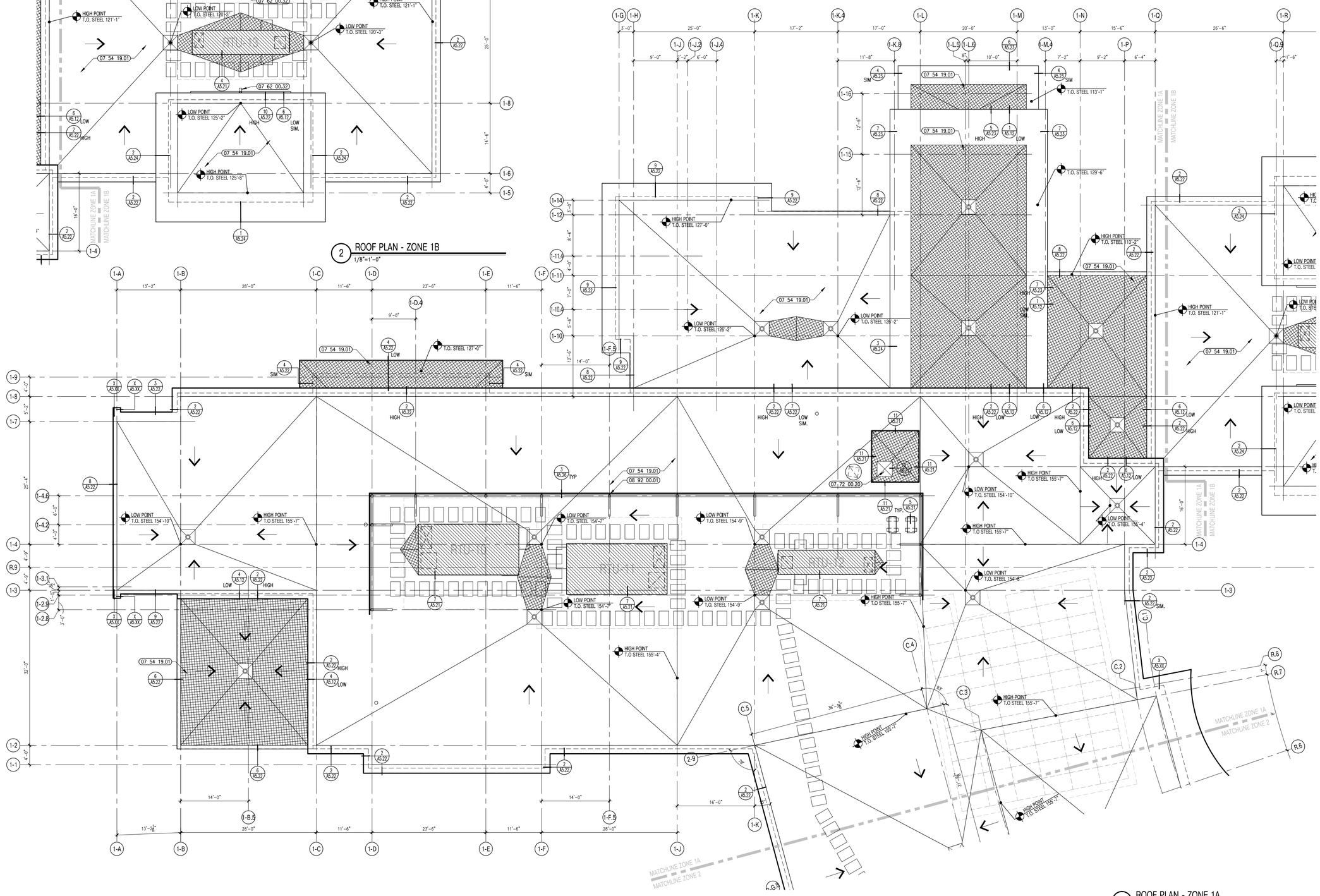

1 ROOF PLAN - ZONE 1A
1/8"=1'-0"

architects
526 Boston Post Rd Wayland, MA
508.358.0790 www.ai3architects.com

BEVERLY MIDDLE SCHOOL

CABOT STREET
BEVERLY, MA 01915

Copyright © 2016 A13 Architects, LLC

KEYNOTE LEGEND: (REFERENCE SHEETS A0.01 & A0.02 FOR MASTER KEYNOTE LIST AND KEYNOTES NOT LISTED)

07 54 19.01	PVC SINGLE PLY MEMBRANE ROOFING
07 62 00.32	SPLASH BLOCK – PLACE WALKWAY PAD UNDER
07 72 00.01	ROOF SCUTTLE – TYPE 1 – 3'-0" x 3'-0"
07 72 00.20	ELEVATOR PENTHOUSE STRUCTURE
08 92 00.01	LOUVERED EQUIPMENT ENCLOSURE

ROOF LEGEND

- TAPERED RIGID ROOF INSULATION – SLOPE 1/4" PER FOOT MIN.
- ROOF DRAIN LOCATION– SEE DETAIL 1/A5.21
- EXHAUST FAN LOCATION – REFER TO MECHANICAL DRAWINGS FOR FURTHER INFORMATION
- MECHANICAL UNIT – REFER TO MECHANICAL DRAWINGS FOR FURTHER INFORMATION
- ROOF MOUNTED MECHANICAL UNIT LOCATION – REFER TO MECHANICAL FOR FURTHER INFORMATION
- 24x36 WALK BOARDS (07 54 19.80)

GENERAL NOTES:

1. REFER TO MANUFACTURERS STANDARD ROOFING REQUIREMENTS TO MEET THE MINIMUM 20 YEAR WARRANTY SPECIFIED.
2. REFER TO DRAWING A5.21 FOR ALL TYPICAL DETAIL ROOF DETAILS. ROOF DETAILS APPLY TO ALL CONDITIONS, INCLUDING THOSE NOT SHOWN ON ROOF PLAN. REFER TO MECHANICAL, PLUMBING, FIRE PROTECTION, AND ELECTRICAL DRAWINGS/SPECIFICATIONS FOR ADDITIONAL INFORMATION AND LOCATIONS.
3. STEEL ROOF DECKS, UNLESS NOTED TO BE FLAT OR DETAILED OTHERWISE, ARE INTENDED TO SLOPE 1/4" PER FOOT MINIMUM TO DRAIN/LOWPOINTS. SLOPE MAYBE BE GREATER THAN 1/4" PER FOOT DUE TO FINAL STEEL ELEVATIONS.

90% CONSTRUCTION DOCUMENTS

NOT FOR CONSTRUCTION

NORTH ARROW

KEYPLAN

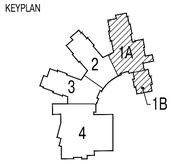

DRAWING NAME:

ROOF PLAN ZONE 1

DRAWN BY:	CRL
REVIEWED BY:	CLO
SCALE:	As Noted
JOB NO.:	1403.00
DATE:	July 25, 2016
DRAWING NUMBER:	A1.51

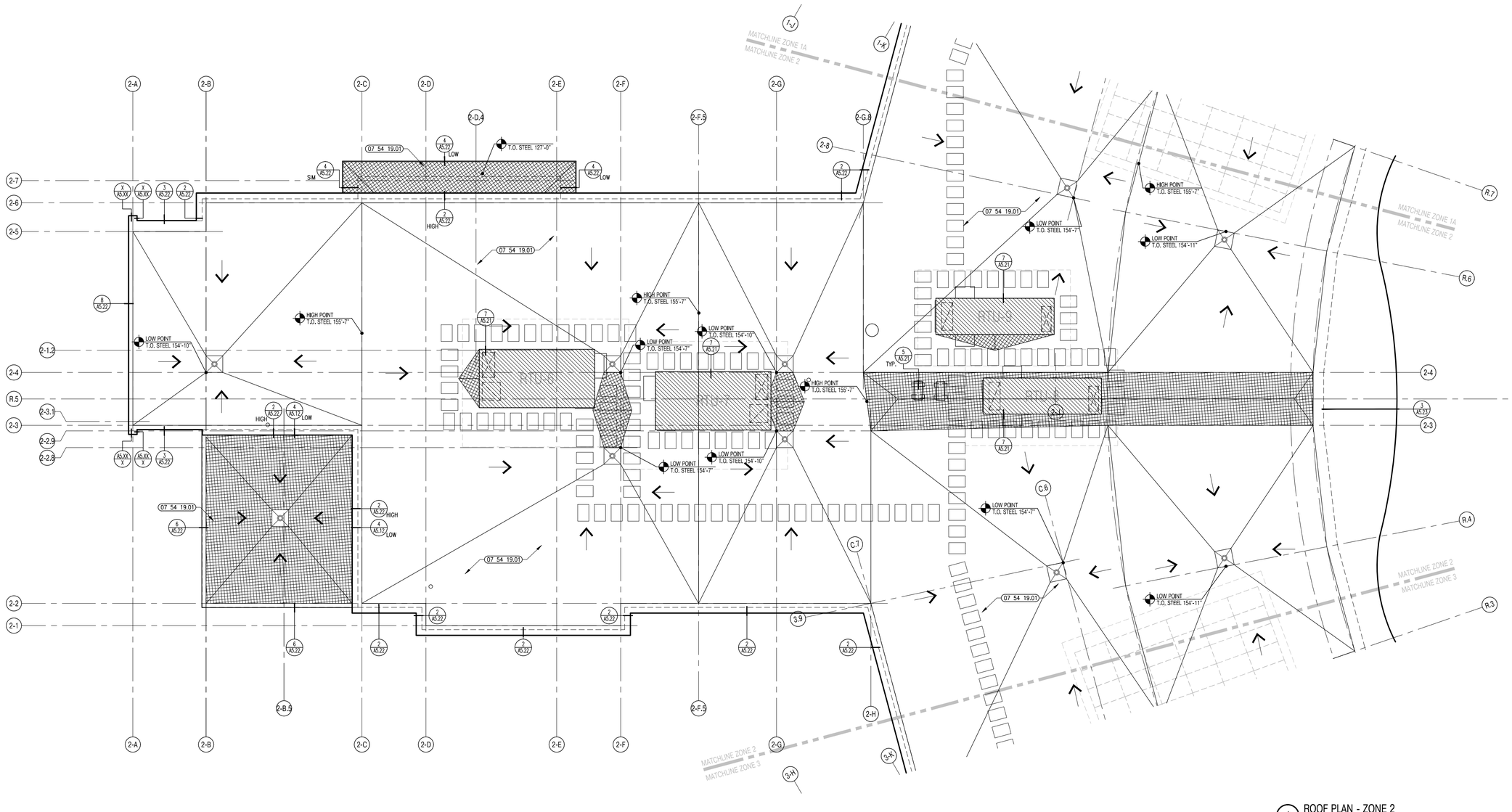

1 ROOF PLAN - ZONE 2
1/8"=1'-0"

architects
526 Boston Post Rd Wayland, MA
508.358.0790 www.ai3architects.com

BEVERLY MIDDLE SCHOOL

CABOT STREET
BEVERLY, MA 01915

Copyright © 2016 A13 Architects, LLC

KEYNOTE LEGEND: (REFERENCE SHEETS A0.01 & A0.02 FOR MASTER KEYNOTE LIST AND KEYNOTES NOT LISTED)

07 54 19.01 PVC SINGLE PLY MEMBRANE ROOFING

ROOF LEGEND

- TAPERED RIGID ROOF INSULATION – SLOPE 1/4" PER FOOT MIN.
- ROOF DRAIN LOCATION– SEE DETAIL 1/A5.21
- EXHAUST FAN LOCATION – REFER TO MECHANICAL DRAWINGS FOR FURTHER INFORMATION
- MECHANICAL UNIT – REFER TO MECHANICAL DRAWINGS FOR FURTHER INFORMATION
- ROOF MOUNTED MECHANICAL UNIT LOCATION – REFER TO MECHANICAL FOR FURTHER INFORMATION
- 24x36 WALK BOARDS (07 54 19.80)

GENERAL NOTES:

1. REFER TO MANUFACTURERS STANDARD ROOFING REQUIREMENTS TO MEET THE MINIMUM 20 YEAR WARRANTY SPECIFIED.
2. REFER TO DRAWING A5.21 FOR ALL TYPICAL DETAIL ROOF DETAILS. ROOF DETAILS APPLY TO ALL CONDITIONS, INCLUDING THOSE NOT SHOWN ON ROOF PLAN. REFER TO MECHANICAL, PLUMBING, FIRE PROTECTION, AND ELECTRICAL DRAWINGS/SPECIFICATIONS FOR ADDITIONAL INFORMATION AND LOCATIONS.
3. STEEL ROOF DECKS, UNLESS NOTED TO BE FLAT OR DETAILED OTHERWISE, ARE INTENDED TO SLOPE 1/4" PER FOOT MINIMUM TO DRAIN/LOWPOINTS. SLOPE MAYBE BE GREATER THAN 1/4" PER FOOT DUE TO FINAL STEEL ELEVATIONS.

90% CONSTRUCTION DOCUMENTS

NOT FOR CONSTRUCTION

NORTH ARROW

KEYPLAN

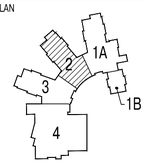

DRAWING NAME:

ROOF PLAN ZONE 2

DRAWN BY:	CRL
REVIEWED BY:	CLO
SCALE:	As Noted
JOB NO.:	1403.00
DATE:	July 25, 2016
DRAWING NUMBER:	A1.52

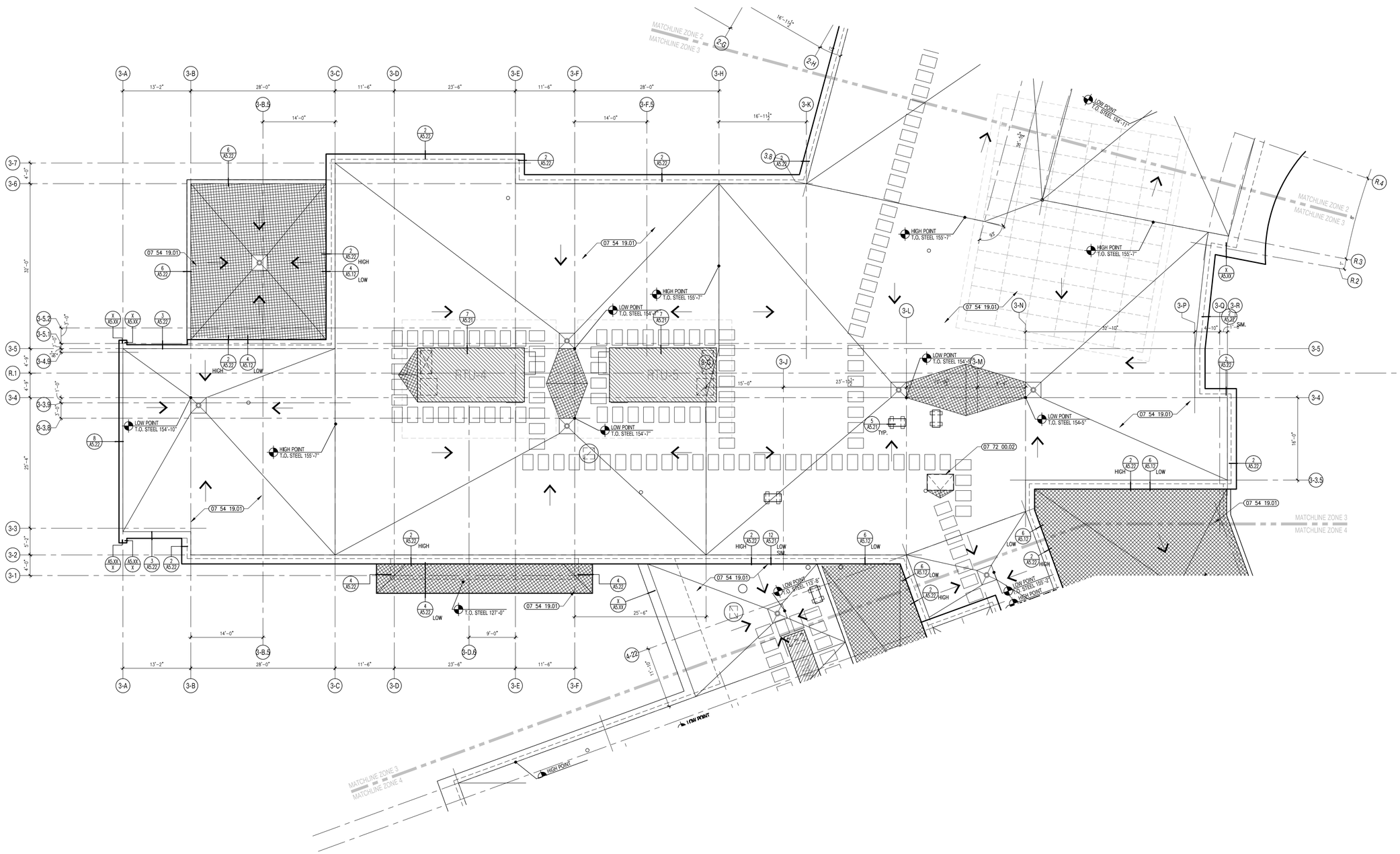

1 ROOF PLAN - ZONE 3
1/8"=1'-0"

A13 architects
526 Boston Post Rd Wayland, MA
508.358.0790 www.a13architects.com

BEVERLY MIDDLE SCHOOL

CABOT STREET
BEVERLY, MA 01915

Copyright © 2016 A13 Architects, LLC

KEYNOTE LEGEND: (REFERENCE SHEETS A0.01 & A0.02 FOR MASTER KEYNOTE LIST AND KEYNOTES NOT LISTED)

07 54 19.01 PVC SINGLE PLY MEMBRANE ROOFING
07 72 00.02 ROOF SCUTTLE – TYPE 2 – 3'–0" x 4'–6"

90% CONSTRUCTION DOCUMENTS

NOT FOR CONSTRUCTION

NORTH ARROW

KEYPLAN

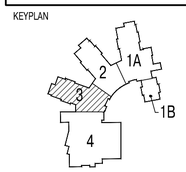

DRAWING NAME:

ROOF PLAN ZONE 3

DRAWN BY: CRL
REVIEWED BY: CLO
SCALE: As Noted
JOB NO.: 1403.00
DATE: July 25, 2016
DRAWING NUMBER: A1.53

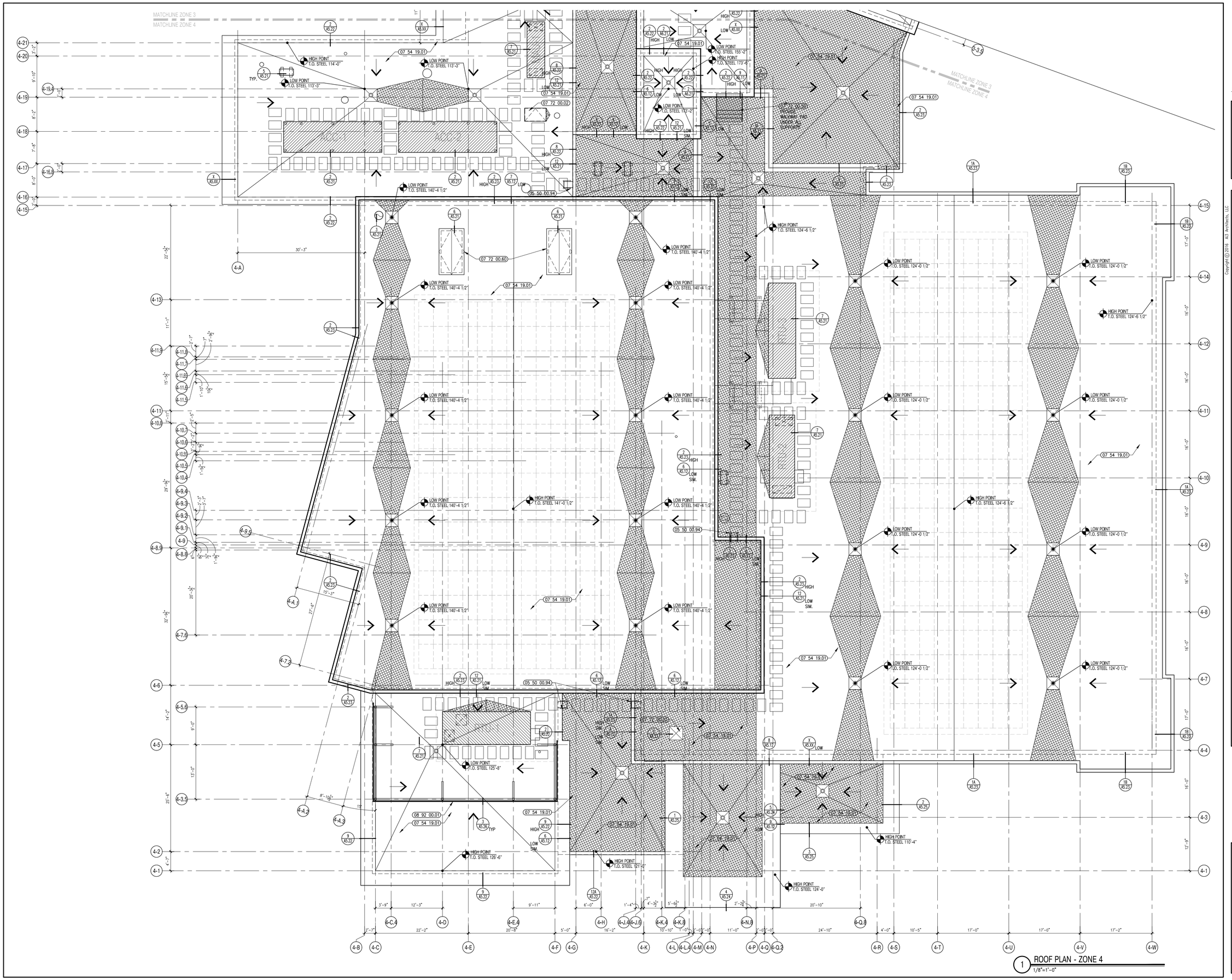

1 ROOF PLAN - ZONE 4
1/8"=1'-0"

A13 architects
526 Boston Post Rd Wayland, MA
508.358.0790 www.a13architects.com

BEVERLY MIDDLE SCHOOL

CABOT STREET
BEVERLY, MA 01915

Copyright © 2016 A13 Architects, LLC

KEYNOTE LEGEND:

(REFERENCE SHEETS A0.01 & A0.02 FOR MASTER KEYNOTE LIST AND KEYNOTES NOT LISTED)

05 50 00.94	ROOF ACCESS LADDER – EXTERIOR
07 54 19.01	PVC SINGLE PLY MEMBRANE ROOFING
07 72 00.02	ROOF SCUTTLE – TYPE 2 – 3'-0" x 4'-6"
07 72 00.20	ELEVATOR PENTHOUSE STRUCTURE
07 72 00.50	ROOF EQUIPMENT PLATFORM
07 72 00.60	HEAT AND SMOKE VENT – 5'-0" x 10'-0"
08 92 00.01	LOUVERED EQUIPMENT ENCLOSURE

ROOF LEGEND

- TAPERED RIGID ROOF INSULATION – SLOPE 1/4" PER FOOT MIN.
- ROOF DRAIN LOCATION– SEE DETAIL 1/A5.21
- EXHAUST FAN LOCATION – REFER TO MECHANICAL DRAWINGS FOR FURTHER INFORMATION
- MECHANICAL UNIT – REFER TO MECHANICAL DRAWINGS FOR FURTHER INFORMATION
- ROOF MOUNTED MECHANICAL UNIT LOCATION – REFER TO MECHANICAL FOR FURTHER INFORMATION
- 24x36 WALK BOARDS (07 54 19.80)

GENERAL NOTES:

1. REFER TO MANUFACTURERS STANDARD ROOFING REQUIREMENTS TO MEET THE MINIMUM 20 YEAR WARRANTY SPECIFIED.
2. REFER TO DRAWING A5.21 FOR ALL TYPICAL DETAIL ROOF DETAILS. ROOF DETAILS APPLY TO ALL CONDITIONS, INCLUDING THOSE NOT SHOWN ON ROOF PLAN. REFER TO MECHANICAL, PLUMBING, FIRE PROTECTION, AND ELECTRICAL DRAWINGS/SPECIFICATIONS FOR ADDITIONAL INFORMATION AND LOCATIONS.
3. STEEL ROOF DECKS, UNLESS NOTED TO BE FLAT OR DETAILED OTHERWISE, ARE INTENDED TO SLOPE 1/4" PER FOOT MINIMUM TO DRAIN/LOWPOINTS. SLOPE MAYBE BE GREATER THAN 1/4" PER FOOT DUE TO FINAL STEEL ELEVATIONS.

90% CONSTRUCTION DOCUMENTS

NOT FOR CONSTRUCTION

NORTH ARROW

KEYPLAN

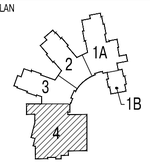

DRAWING NAME:

ROOF PLAN ZONE 4

DRAWN BY:	CRL
REVIEWED BY:	CLO
SCALE:	As Noted
JOB NO.:	1403.00
DATE:	July 25, 2016

DRAWING NUMBER: A1.54

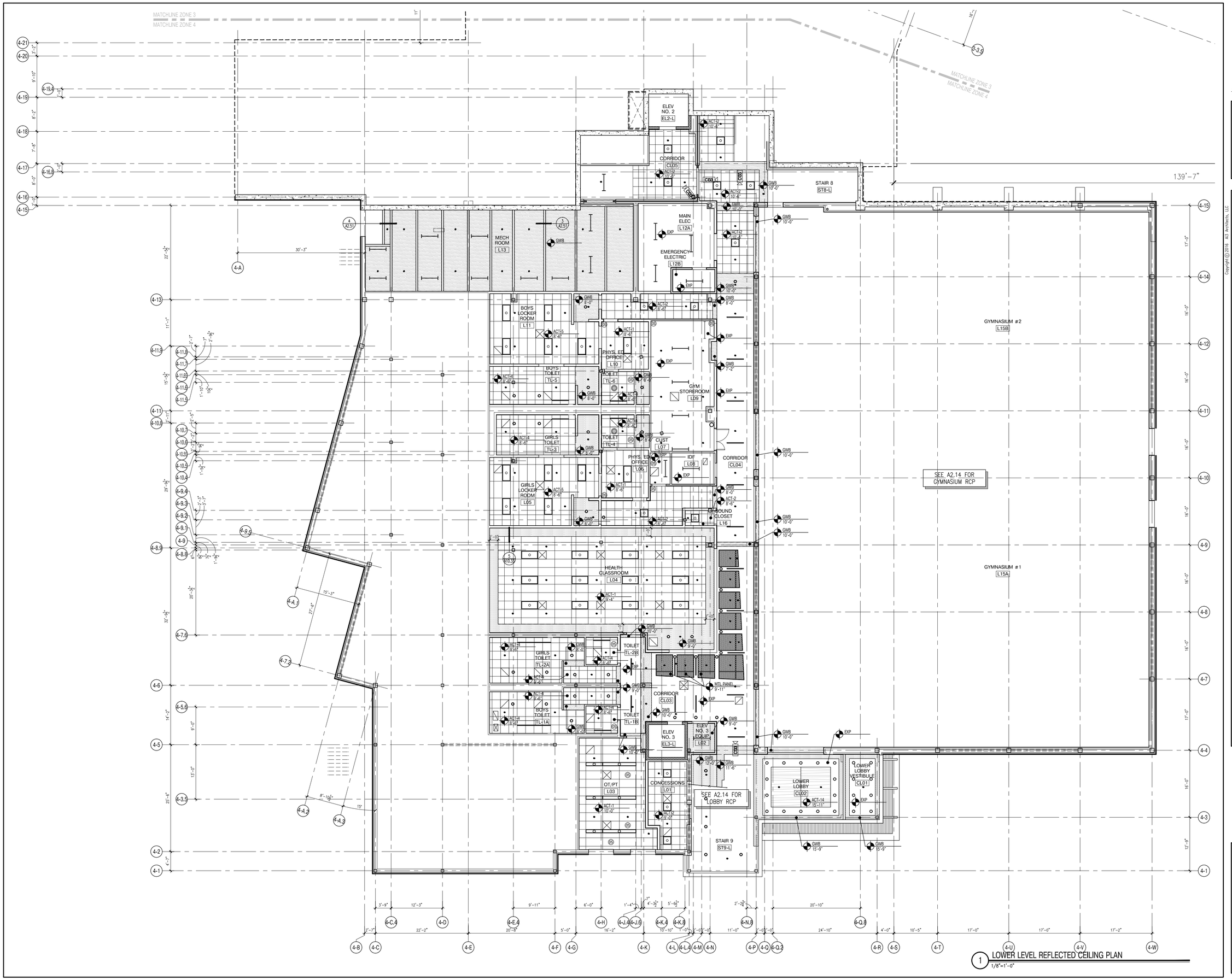

1 LOWER LEVEL REFLECTED CEILING PLAN
1/8"=1'-0"

526 Boston Post Rd Wayland, MA
508.358.0790 www.ai3architects.com

BEVERLY MIDDLE SCHOOL

CABOT STREET
BEVERLY, MA 01915

Copyright © 2016 A13 Architects, LLC

REFLECTED CEILING PLAN LEGEND:

- SUPPLY GRILL– SEE MECH.
- RETURN GRILL– SEE MECH.
- GWB SOFFIT
- WOOD VENEER TILE
- OCCUPANCY SENSOR– SEE ELEC.
- DAYLIGHT SENSOR– SEE ELEC.
- ACOUSTIC PANEL– ABSORPTIVE
- ACOUSTIC PANEL– REFLECTIVE
- STAGE LIGHTING– SEE ELEC. AND THEATER
- STRIP LIGHT FIXTURE– SEE ELEC.
- SCONCE LIGHT FIXTURE– SEE ELEC.
- RECESSED LIGHT FIXTURE– SEE ELEC.
- LINEAR PENDANT LIGHT FIXTURE– SEE ELEC. (MOUNTING HEIGHT AS NOTED) X-XX
- PENDANT LIGHT FIXTURE– SEE ELEC.
- DOWN LIGHT– SEE ELEC.
- TRACK LIGHTING FIXTURE– SEE ELEC.

GENERAL NOTES:

1. ALL CEILING MOUNTED ITEMS, INCLUDING SPRINKLER HEADS, SMOKE DETECTORS, SPEAKERS, VIDEO, WIRELESS ACCESS POINTS AND RECESSED DOWN LIGHTS, PLACED IN A 2'X4' CEILING TILE ARE TO BE ON CENTERLINE OF 2'–0" DIMENSION AND TO BE AT 1'–0" OFF EITHER END OR IN THE EXACT CENTER OF THE 4'–0" DIMENSION.
2. ALL CEILING MOUNTED ITEMS INCLUDING SPRINKLER HEADS, SMOKE DETECTORS, SPEAKERS, VIDEO, WIRELESS ACCESS POINTS AND RECESSED DOWN LIGHTS PLACED IN A 2'X2' CEILING TILE TO BE CENTERED IN THE EXACT CENTER OF THE TILE.
3. ALL SUPPLY GRILLES, RETURN REGISTERS, SPRINKLER HEADS, SMOKE DETECTORS, LIGHTS, SPEAKERS, VIDEO, WIRELESS ACCESS POINTS AND EXIT SIGNS TO BE LOCATED ON COORDINATION DRAWINGS. FINAL PLACEMENT TO BE APPROVED BY ARCHITECT.
4. DIVISION 078100, 078400, 092123, 092216 AND 092900 REFER TO DRAWINGS G0.1, G0.2, G0.3, G0.4 AND G0.5 FOR ROOMS (AREAS) THAT ARE REQUIRED TO HAVE FIRE RATED CEILING/FLOOR AND WALL ASSEMBLIES.
5. PAINT CONCEALED SPRINKLER HEAD COVERS AT WOOD CEILING TO MATCH WOOD SPECIES.
6. PAINT CONCEALED SPRINKLER HEAD COVERS AT GWB CEILING TO MATCH CEILING PAINT COLOR.
7. ACOUSTICAL CEILING FILED SUB-CONTRACTOR IS TO THOROUGHLY COORDINATE EQUIPMENT, DEVICES, AND SPRINKLER HEADS NOTED ON THE FIRE PROTECTION DRAWINGS, ELECTRICAL DRAWINGS, MECHANICAL DRAWINGS, AND TECHNOLOGY DRAWINGS.
8. DIVISION 079200 TO PROVIDE JOINT SEALANT AT ALL GWB SOFFITS THAT ABUT DIFFERENT MATERIALS.
9. ALL SOFFITS TO ALIGN WITH ADJACENT SURFACE, UNLESS NOTED OTHERWISE.

90% CONSTRUCTION DOCUMENTS

NOT FOR CONSTRUCTION

NORTH ARROW

KEYPLAN

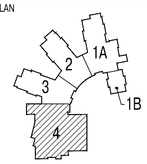

DRAWING NAME:

LOWER LEVEL REFLECTED CEILING PLAN ZONE 4

DRAWN BY:	JMR
REVIEWED BY:	BPH
SCALE:	As Noted
JOB NO.:	1403.00
DATE:	July 25, 2016
DRAWING NUMBER:	A2.04

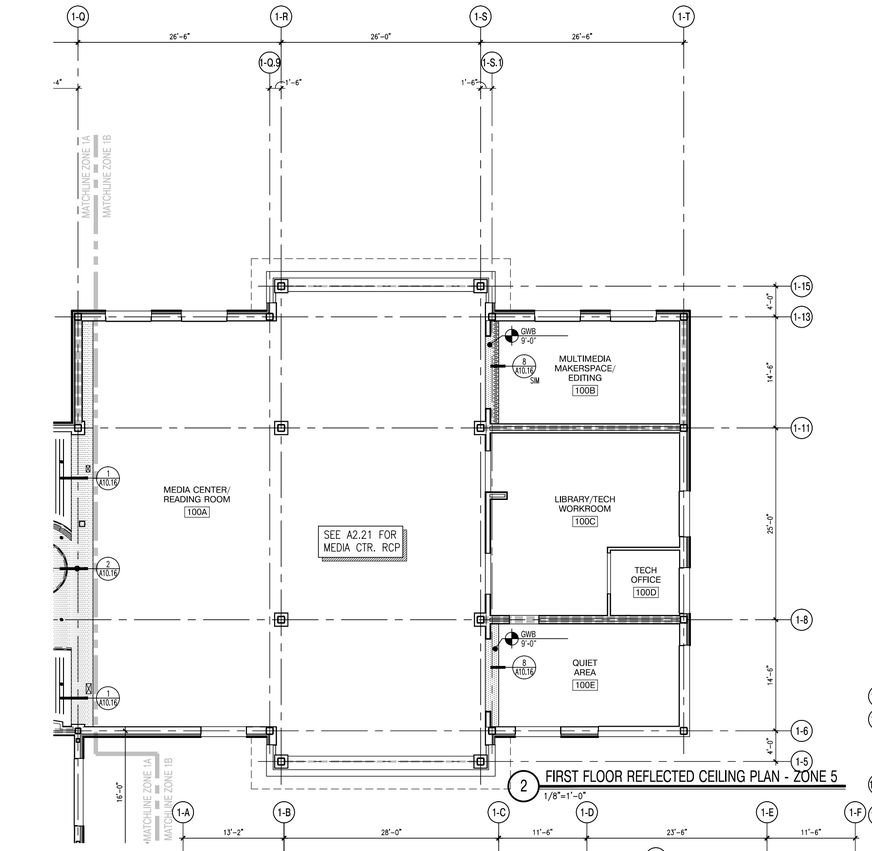

2 FIRST FLOOR REFLECTED CEILING PLAN - ZONE 5
1/8"=1'-0"

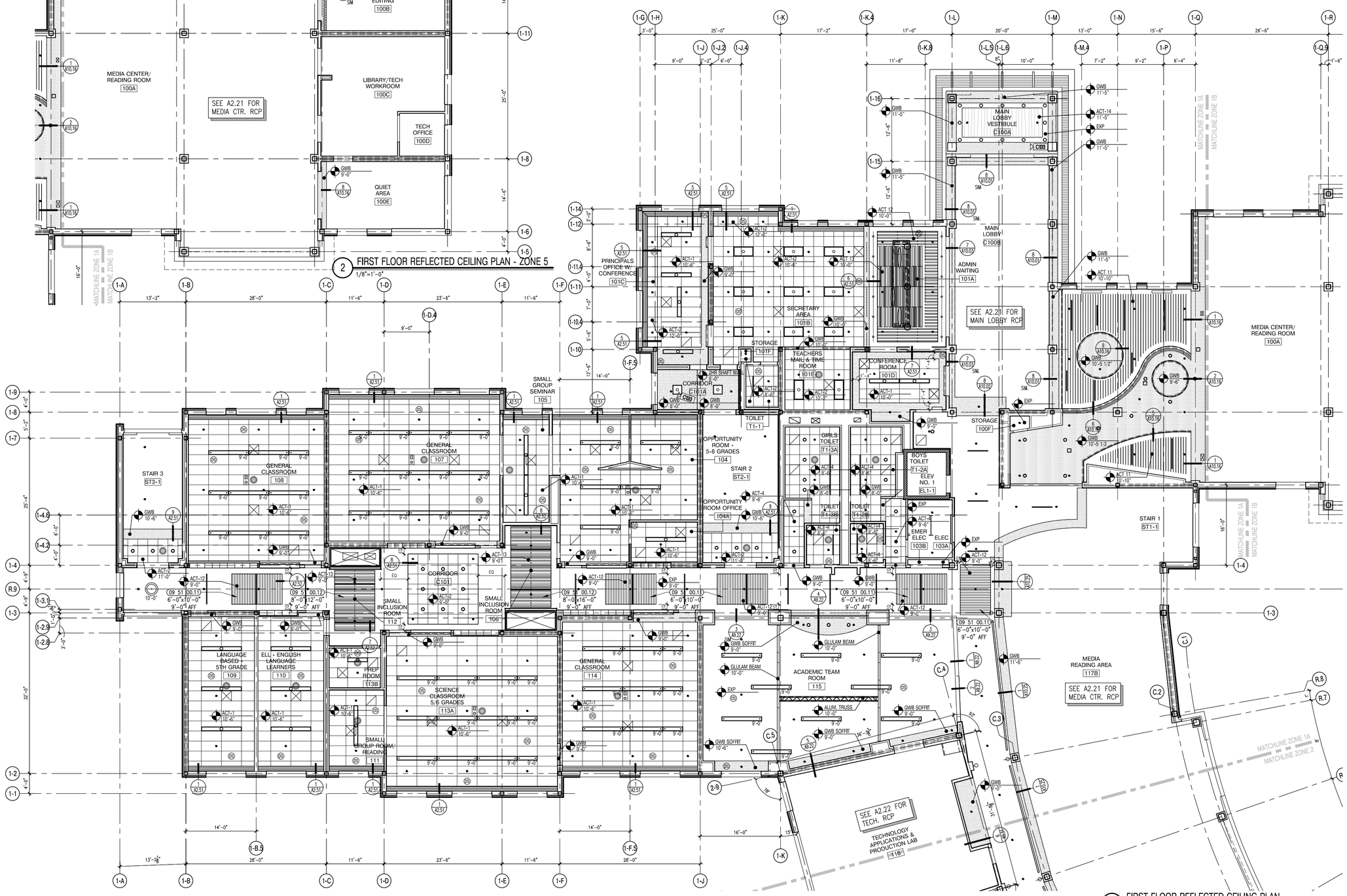

1 FIRST FLOOR REFLECTED CEILING PLAN
1/8"=1'-0"

architects
526 Boston Post Rd Wayland, MA
508.358.0790 www.ai3architects.com

BEVERLY MIDDLE SCHOOL

CABOT STREET
BEVERLY, MA 01915

Copyright © 2016 A13 Architects, LLC

REFLECTED CEILING PLAN LEGEND:

- SUPPLY GRILL– SEE MECH.
- RETURN GRILL– SEE MECH.
- GWB SOFFIT
- WOOD VENEER TILE
- OCCUPANCY SENSOR– SEE ELEC.
- DAYLIGHT SENSOR– SEE ELEC.
- ACOUSTIC PANEL– ABSORPTIVE
- ACOUSTIC PANEL– REFLECTIVE
- STAGE LIGHTING– SEE ELEC. AND THEATER
- STRIP LIGHT FIXTURE– SEE ELEC.
- SCONCE LIGHT FIXTURE– SEE ELEC.
- RECESSED LIGHT FIXTURE– SEE ELEC.
- LINEAR PENDANT LIGHT FIXTURE– SEE ELEC. (MOUNTING HEIGHT AS NOTED)
- PENDANT LIGHT FIXTURE– SEE ELEC.
- DOWN LIGHT– SEE ELEC.
- TRACK LIGHTING FIXTURE– SEE ELEC.

GENERAL NOTES:

1. ALL CEILING MOUNTED ITEMS, INCLUDING SPRINKLER HEADS, SMOKE DETECTORS, SPEAKERS, VIDEO, WIRELESS ACCESS POINTS AND RECESSED DOWN LIGHTS, PLACED IN A 2'X4' CEILING TILE ARE TO BE ON CENTERLINE OF 2'–0" DIMENSION AND TO BE AT 1'–0" OFF EITHER END OR IN THE EXACT CENTER OF THE 4'–0" DIMENSION.
2. ALL CEILING MOUNTED ITEMS INCLUDING SPRINKLER HEADS, SMOKE DETECTORS, SPEAKERS, VIDEO, WIRELESS ACCESS POINTS AND RECESSED DOWN LIGHTS PLACED IN A 2'X2' CEILING TILE TO BE CENTERED IN THE EXACT CENTER OF THE TILE.
3. ALL SUPPLY GRILLES, RETURN REGISTERS, SPRINKLER HEADS, SMOKE DETECTORS, LIGHTS, SPEAKERS, VIDEO, WIRELESS ACCESS POINTS AND EXIT SIGNS TO BE LOCATED ON COORDINATION DRAWINGS. FINAL PLACEMENT TO BE APPROVED BY ARCHITECT.
4. DIVISION 078100, 078400, 092123, 092216 AND 092900 REFER TO DRAWINGS G0.1, G0.2, G0.3, G0.4 AND G0.5 FOR ROOMS (AREAS) THAT ARE REQUIRED TO HAVE FIRE RATED CEILING/FLOOR AND WALL ASSEMBLIES.
5. PAINT CONCEALED SPRINKLER HEAD COVERS AT WOOD CEILING TO MATCH WOOD SPECIES.
6. PAINT CONCEALED SPRINKLER HEAD COVERS AT GWB CEILING TO MATCH CEILING PAINT COLOR.
7. ACOUSTICAL CEILING FILED SUB-CONTRACTOR IS TO THOROUGHLY COORDINATE EQUIPMENT, DEVICES, AND SPRINKLER HEADS NOTED ON THE FIRE PROTECTION DRAWINGS, ELECTRICAL DRAWINGS, MECHANICAL DRAWINGS, AND TECHNOLOGY DRAWINGS.
8. DIVISION 079200 TO PROVIDE JOINT SEALANT AT ALL GWB SOFFITS THAT ABUT DIFFERENT MATERIALS.
9. ALL SOFFITS TO ALIGN WITH ADJACENT SURFACE, UNLESS NOTED OTHERWISE.

90% CONSTRUCTION DOCUMENTS

NOT FOR CONSTRUCTION

NORTH ARROW

KEYPLAN

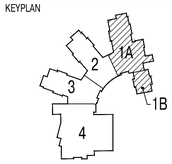

DRAWING NAME:

FIRST FLOOR REFLECTED CEILING PLAN ZONE 1

DRAWN BY:	JMR/MJR/ETF
REVIEWED BY:	BPH
SCALE:	As Noted
JOB NO.:	1403.00
DATE:	July 25, 2016
DRAWING NUMBER:	A2.11

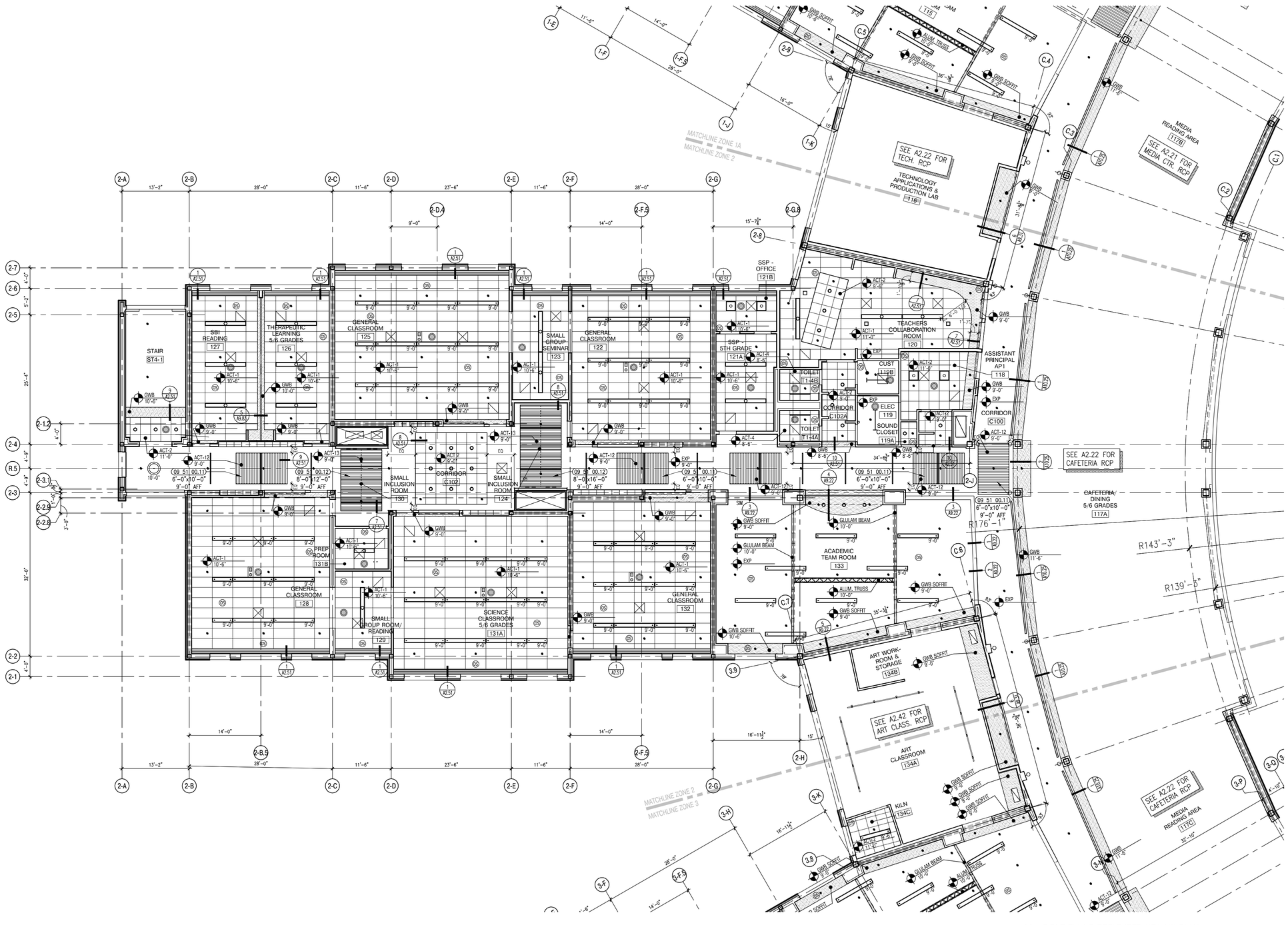

1 FIRST FLOOR REFLECTED CEILING PLAN
1/8"=1'-0"

architects
526 Boston Post Rd Wayland, MA
508.358.0790 www.ai3architects.com

BEVERLY MIDDLE SCHOOL

CABOT STREET
BEVERLY, MA 01915

Copyright © 2016 A13 Architects, LLC

REFLECTED CEILING PLAN LEGEND:

- SUPPLY GRILL– SEE MECH.
- RETURN GRILL– SEE MECH.
- GWB SOFFIT
- WOOD VENEER TILE
- OCCUPANCY SENSOR– SEE ELEC.
- DAYLIGHT SENSOR– SEE ELEC.
- ACOUSTIC PANEL– ABSORPTIVE
- ACOUSTIC PANEL– REFLECTIVE
- STAGE LIGHTING– SEE ELEC. AND THEATER
- STRIP LIGHT FIXTURE– SEE ELEC.
- SCONCE LIGHT FIXTURE– SEE ELEC.
- RECESSED LIGHT FIXTURE– SEE ELEC.
- LINEAR PENDANT LIGHT FIXTURE– SEE ELEC. (MOUNTING HEIGHT AS NOTED) X-XX
- PENDANT LIGHT FIXTURE– SEE ELEC.
- DOWN LIGHT– SEE ELEC.
- TRACK LIGHTING FIXTURE– SEE ELEC.

GENERAL NOTES:

1. ALL CEILING MOUNTED ITEMS, INCLUDING SPRINKLER HEADS, SMOKE DETECTORS, SPEAKERS, VIDEO, WIRELESS ACCESS POINTS AND RECESSED DOWN LIGHTS, PLACED IN A 2'X4' CEILING TILE ARE TO BE ON CENTERLINE OF 2'–0" DIMENSION AND TO BE AT 1'–0" OFF EITHER END OR IN THE EXACT CENTER OF THE 4'–0" DIMENSION.
2. ALL CEILING MOUNTED ITEMS INCLUDING SPRINKLER HEADS, SMOKE DETECTORS, SPEAKERS, VIDEO, WIRELESS ACCESS POINTS AND RECESSED DOWN LIGHTS PLACED IN A 2'X2' CEILING TILE TO BE CENTERED IN THE EXACT CENTER OF THE TILE.
3. ALL SUPPLY GRILLES, RETURN REGISTERS, SPRINKLER HEADS, SMOKE DETECTORS, LIGHTS, SPEAKERS, VIDEO, WIRELESS ACCESS POINTS AND EXIT SIGNS TO BE LOCATED ON COORDINATION DRAWINGS. FINAL PLACEMENT TO BE APPROVED BY ARCHITECT.
4. DIVISION 078100, 078400, 092123, 092216 AND 092900 REFER TO DRAWINGS G0.1, G0.2, G0.3, G0.4 AND G0.5 FOR ROOMS (AREAS) THAT ARE REQUIRED TO HAVE FIRE RATED CEILING/FLOOR AND WALL ASSEMBLIES.
5. PAINT CONCEALED SPRINKLER HEAD COVERS AT WOOD CEILING TO MATCH WOOD SPECIES.
6. PAINT CONCEALED SPRINKLER HEAD COVERS AT GWB CEILING TO MATCH CEILING PAINT COLOR.
7. ACOUSTICAL CEILING FILED SUB-CONTRACTOR IS TO THOROUGHLY COORDINATE EQUIPMENT, DEVICES, AND SPRINKLER HEADS NOTED ON THE FIRE PROTECTION DRAWINGS, ELECTRICAL DRAWINGS, MECHANICAL DRAWINGS, AND TECHNOLOGY DRAWINGS.
8. DIVISION 079200 TO PROVIDE JOINT SEALANT AT ALL GWB SOFFITS THAT ABUT DIFFERENT MATERIALS.
9. ALL SOFFITS TO ALIGN WITH ADJACENT SURFACE, UNLESS NOTED OTHERWISE.

90% CONSTRUCTION DOCUMENTS

NOT FOR CONSTRUCTION

NORTH ARROW

KEYPLAN

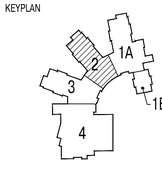

DRAWING NAME:

FIRST FLOOR REFLECTED CEILING PLAN ZONE 2

DRAWN BY:	JMR/MJR/ETF
REVIEWED BY:	BPH
SCALE:	As Noted
JOB NO.:	1403.00
DATE:	July 25, 2016
DRAWING NUMBER:	A2.12

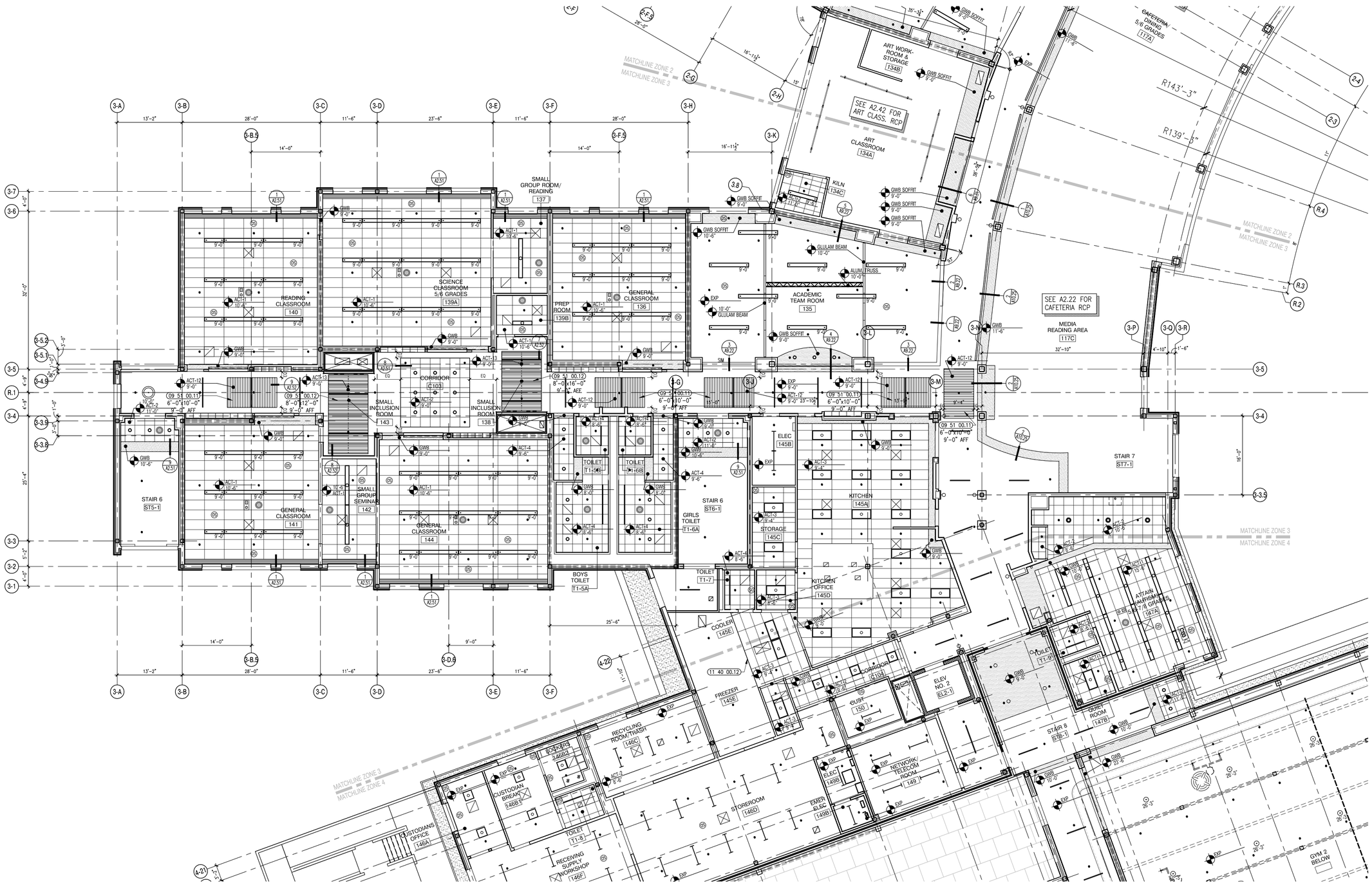

1 FIRST FLOOR REFLECTED CEILING PLAN
1/8"=1'-0"

architects
526 Boston Post Rd Wayland, MA
508.358.0790 www.ai3architects.com

BEVERLY MIDDLE SCHOOL

CABOT STREET
BEVERLY, MA 01915

Copyright © 2016 A13 Architects, LLC

REFLECTED CEILING PLAN LEGEND:

- SUPPLY GRILL– SEE MECH.
- RETURN GRILL– SEE MECH.
- GWB SOFFIT
- WOOD VENEER TILE
- OCCUPANCY SENSOR– SEE ELEC.
- DAYLIGHT SENSOR– SEE ELEC.
- ACOUSTIC PANEL– ABSORPTIVE
- ACOUSTIC PANEL– REFLECTIVE
- STAGE LIGHTING– SEE ELEC. AND THEATER
- STRIP LIGHT FIXTURE– SEE ELEC.
- SCONCE LIGHT FIXTURE– SEE ELEC.
- RECESSED LIGHT FIXTURE– SEE ELEC.
- LINEAR PENDANT LIGHT FIXTURE– SEE ELEC. (MOUNTING HEIGHT AS NOTED) X'-XX'
- PENDANT LIGHT FIXTURE– SEE ELEC.
- DOWN LIGHT– SEE ELEC.
- TRACK LIGHTING FIXTURE– SEE ELEC.

GENERAL NOTES:

1. ALL CEILING MOUNTED ITEMS, INCLUDING SPRINKLER HEADS, SMOKE DETECTORS, SPEAKERS, VIDEO, WIRELESS ACCESS POINTS AND RECESSED DOWN LIGHTS, PLACED IN A 2'X4' CEILING TILE ARE TO BE ON CENTERLINE OF 2'–0" DIMENSION AND TO BE AT 1'–0" OFF EITHER END OR IN THE EXACT CENTER OF THE 4'–0" DIMENSION.
2. ALL CEILING MOUNTED ITEMS INCLUDING SPRINKLER HEADS, SMOKE DETECTORS, SPEAKERS, VIDEO, WIRELESS ACCESS POINTS AND RECESSED DOWN LIGHTS PLACED IN A 2'X2' CEILING TILE TO BE CENTERED IN THE EXACT CENTER OF THE TILE.
3. ALL SUPPLY GRILLES, RETURN REGISTERS, SPRINKLER HEADS, SMOKE DETECTORS, LIGHTS, SPEAKERS, VIDEO, WIRELESS ACCESS POINTS AND EXIT SIGNS TO BE LOCATED ON COORDINATION DRAWINGS. FINAL PLACEMENT TO BE APPROVED BY ARCHITECT.
4. DIVISION 078100, 078400, 092123, 092216 AND 092900 REFER TO DRAWINGS G0.1, G0.2, G0.3, G0.4 AND G0.5 FOR ROOMS (AREAS) THAT ARE REQUIRED TO HAVE FIRE RATED CEILING/FLOOR AND WALL ASSEMBLIES.
5. PAINT CONCEALED SPRINKLER HEAD COVERS AT WOOD CEILING TO MATCH WOOD SPECIES.
6. PAINT CONCEALED SPRINKLER HEAD COVERS AT GWB CEILING TO MATCH CEILING PAINT COLOR.
7. ACOUSTICAL CEILING FILED SUB-CONTRACTOR IS TO THOROUGHLY COORDINATE EQUIPMENT, DEVICES, AND SPRINKLER HEADS NOTED ON THE FIRE PROTECTION DRAWINGS, ELECTRICAL DRAWINGS, MECHANICAL DRAWINGS, AND TECHNOLOGY DRAWINGS.
8. DIVISION 070200 TO PROVIDE JOINT SEALANT AT ALL GWB SOFFITS THAT ABUT DIFFERENT MATERIALS.
9. ALL SOFFITS TO ALIGN WITH ADJACENT SURFACE, UNLESS NOTED OTHERWISE.

90% CONSTRUCTION DOCUMENTS

NOT FOR CONSTRUCTION

NORTH ARROW

KEYPLAN

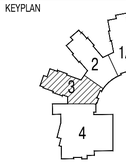

DRAWING NAME:

FIRST FLOOR REFLECTED CEILING PLAN ZONE 3

DRAWN BY:	JMR/MJR/ETF
REVIEWED BY:	BPH
SCALE:	As Noted
JOB NO.:	1403.00
DATE:	July 25, 2016
DRAWING NUMBER:	A2.13

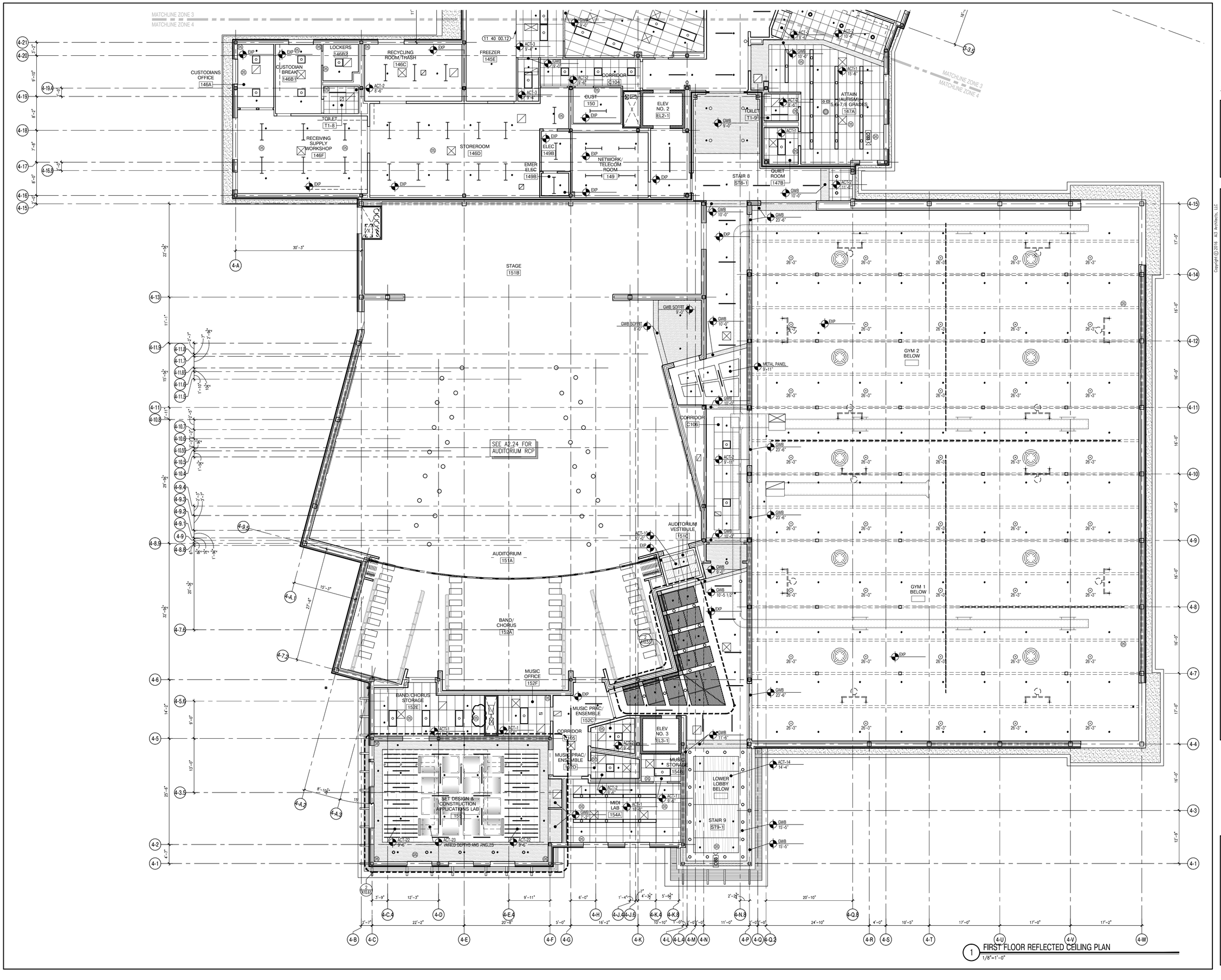

1 FIRST FLOOR REFLECTED CEILING PLAN
1/8"=1'-0"

A13 architects
526 Boston Post Rd Wayland, MA
508.358.0790 www.a13architects.com

BEVERLY MIDDLE SCHOOL

CABOT STREET
BEVERLY, MA 01915

Copyright © 2016 A13 Architects, LLC

REFLECTED CEILING PLAN LEGEND:

- SUPPLY GRILL– SEE MECH.
- RETURN GRILL– SEE MECH.
- GWB SOFFIT
- WOOD VENEER TILE
- OCCUPANCY SENSOR– SEE ELEC.
- DAYLIGHT SENSOR– SEE ELEC.
- ACOUSTIC PANEL– ABSORPTIVE
- ACOUSTIC PANEL– REFLECTIVE
- STAGE LIGHTING– SEE ELEC. AND THEATER
- STRIP LIGHT FIXTURE– SEE ELEC.
- SCONCE LIGHT FIXTURE– SEE ELEC.
- RECESSED LIGHT FIXTURE– SEE ELEC.
- LINEAR PENDANT LIGHT FIXTURE– SEE ELEC. (MOUNTING HEIGHT AS NOTED) X-XX
- PENDANT LIGHT FIXTURE– SEE ELEC.
- DOWN LIGHT– SEE ELEC.
- TRACK LIGHTING FIXTURE– SEE ELEC.

GENERAL NOTES:

1. ALL CEILING MOUNTED ITEMS, INCLUDING SPRINKLER HEADS, SMOKE DETECTORS, SPEAKERS, VIDEO, WIRELESS ACCESS POINTS AND RECESSED DOWN LIGHTS, PLACED IN A 2'X4' CEILING TILE ARE TO BE ON CENTERLINE OF 2'–0" DIMENSION AND TO BE AT 1'–0" OFF EITHER END OR IN THE EXACT CENTER OF THE 4'–0" DIMENSION.
2. ALL CEILING MOUNTED ITEMS INCLUDING SPRINKLER HEADS, SMOKE DETECTORS, SPEAKERS, VIDEO, WIRELESS ACCESS POINTS AND RECESSED DOWN LIGHTS PLACED IN A 2'X2' CEILING TILE TO BE CENTERED IN THE EXACT CENTER OF THE TILE.
3. ALL SUPPLY GRILLES, RETURN REGISTERS, SPRINKLER HEADS, SMOKE DETECTORS, LIGHTS, SPEAKERS, VIDEO, WIRELESS ACCESS POINTS AND EXIT SIGNS TO BE LOCATED ON COORDINATION DRAWINGS. FINAL PLACEMENT TO BE APPROVED BY ARCHITECT.
4. DIVISION 078100, 078400, 092123, 092216 AND 092900 REFER TO DRAWINGS G0.1, G0.2, G0.3, G0.4 AND G0.5 FOR ROOMS (AREAS) THAT ARE REQUIRED TO HAVE FIRE RATED CEILING/FLOOR AND WALL ASSEMBLIES.
5. PAINT CONCEALED SPRINKLER HEAD COVERS AT WOOD CEILING TO MATCH WOOD SPECIES.
6. PAINT CONCEALED SPRINKLER HEAD COVERS AT GWB CEILING TO MATCH CEILING PAINT COLOR.
7. ACOUSTICAL CEILING FILED SUB-CONTRACTOR IS TO THOROUGHLY COORDINATE EQUIPMENT, DEVICES, AND SPRINKLER HEADS NOTED ON THE FIRE PROTECTION DRAWINGS, ELECTRICAL DRAWINGS, MECHANICAL DRAWINGS, AND TECHNOLOGY DRAWINGS.
8. DIVISION 079200 TO PROVIDE JOINT SEALANT AT ALL GWB SOFFITS THAT ABUT DIFFERENT MATERIALS.
9. ALL SOFFITS TO ALIGN WITH ADJACENT SURFACE, UNLESS NOTED OTHERWISE.

90% CONSTRUCTION DOCUMENTS

NOT FOR CONSTRUCTION

NORTH ARROW

KEYPLAN

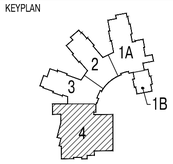

DRAWING NAME:

FIRST FLOOR REFLECTED CEILING PLAN ZONE 4

DRAWN BY:	JMR/MJR/ETF
REVIEWED BY:	BPH
SCALE:	As Noted
JOB NO.:	1403.00
DATE:	July 25, 2016
DRAWING NUMBER:	A2.14

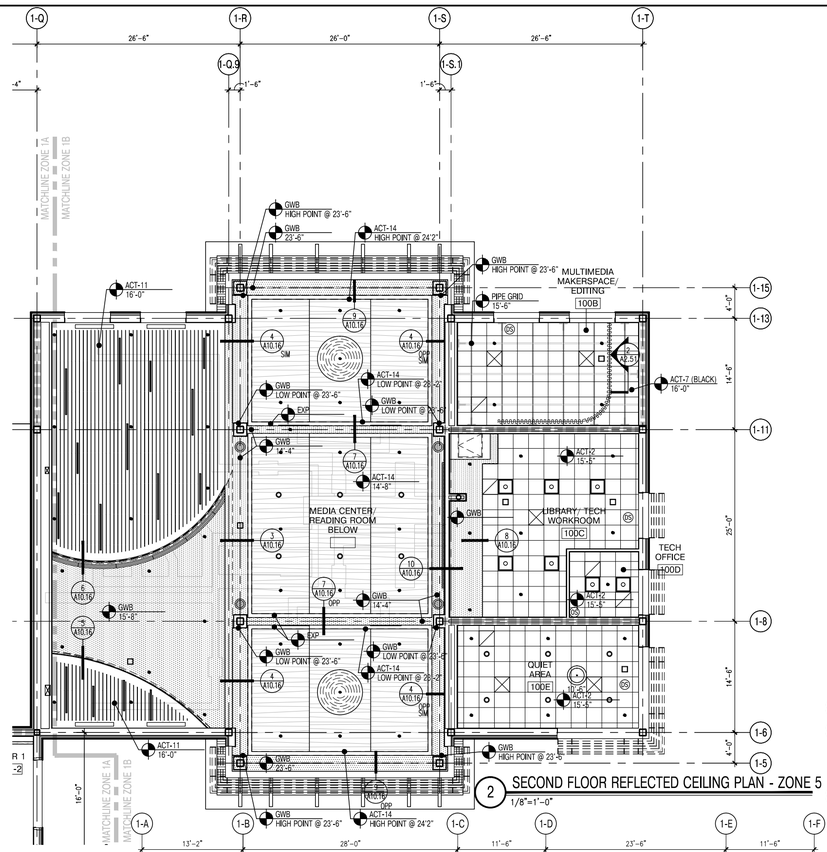

2 SECOND FLOOR REFLECTED CEILING PLAN - ZONE 5
1/8"=1'-0"

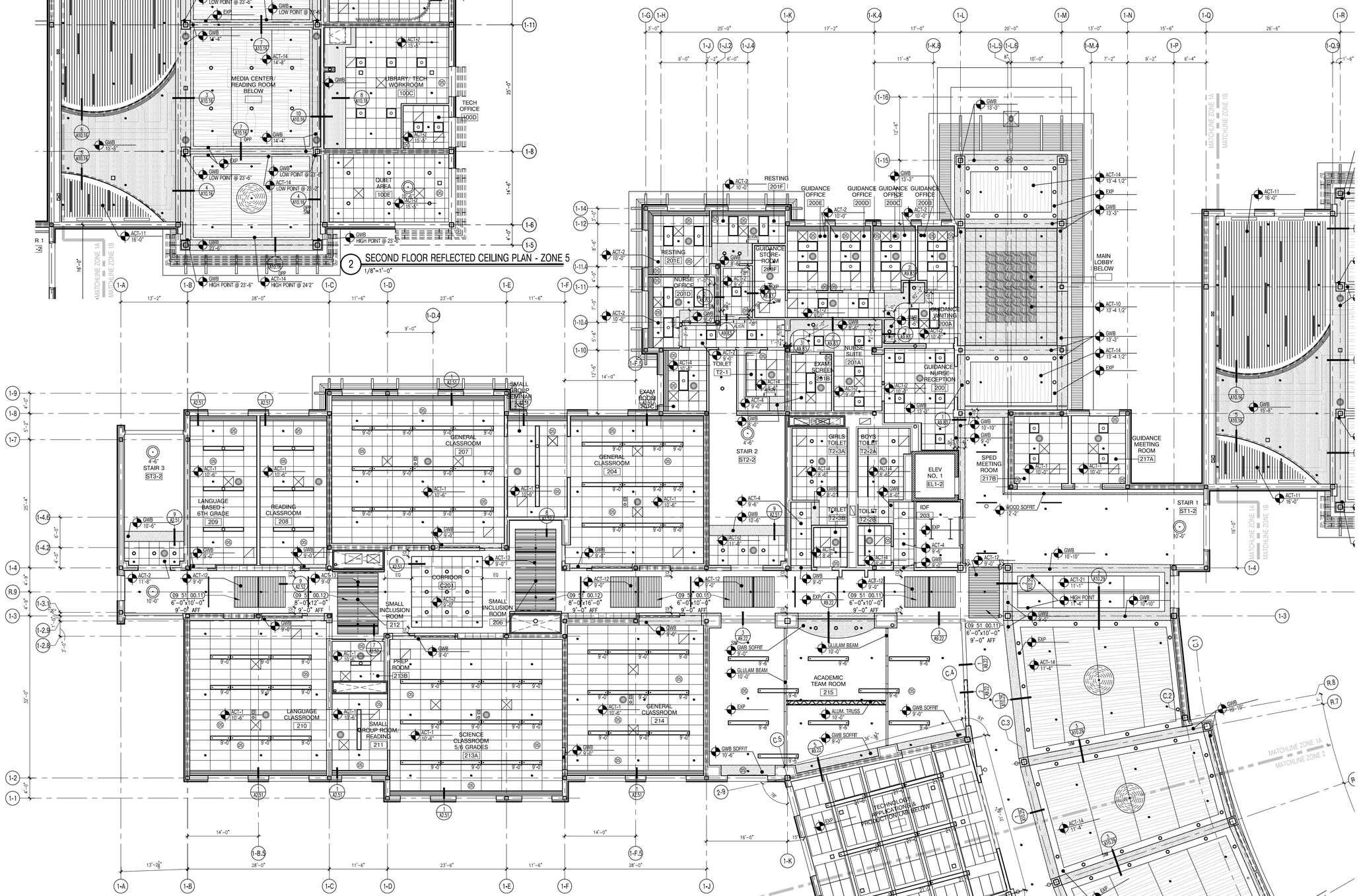

1 SECOND FLOOR REFLECTED CEILING PLAN
1/8"=1'-0"

A13 architects
526 Boston Post Rd Wayland, MA
508.358.0790 www.a13architects.com

BEVERLY MIDDLE SCHOOL

CABOT STREET
BEVERLY, MA 01915

Copyright © 2016 A13 Architects, LLC

REFLECTED CEILING PLAN LEGEND:

- SUPPLY GRILL– SEE MECH.
- RETURN GRILL– SEE MECH.
- GWB SOFFIT
- WOOD VENEER TILE
- OCCUPANCY SENSOR– SEE ELEC.
- DAYLIGHT SENSOR– SEE ELEC.
- ACOUSTIC PANEL– ABSORPTIVE
- ACOUSTIC PANEL– REFLECTIVE
- STAGE LIGHTING– SEE ELEC. AND THEATER
- STRIP LIGHT FIXTURE– SEE ELEC.
- SCONCE LIGHT FIXTURE– SEE ELEC.
- RECESSED LIGHT FIXTURE– SEE ELEC.
- LINEAR PENDANT LIGHT FIXTURE– SEE ELEC. (MOUNTING HEIGHT AS NOTED) X-XX
- PENDANT LIGHT FIXTURE– SEE ELEC.
- DOWN LIGHT– SEE ELEC.
- TRACK LIGHTING FIXTURE– SEE ELEC.

GENERAL NOTES:

1. ALL CEILING MOUNTED ITEMS, INCLUDING SPRINKLER HEADS, SMOKE DETECTORS, SPEAKERS, VIDEO, WIRELESS ACCESS POINTS AND RECESSED DOWN LIGHTS, PLACED IN A 2'X4' CEILING TILE ARE TO BE ON CENTERLINE OF 2'–0" DIMENSION AND TO BE AT 1'–0" OFF EITHER END OR IN THE EXACT CENTER OF THE 4'–0" DIMENSION.
2. ALL CEILING MOUNTED ITEMS INCLUDING SPRINKLER HEADS, SMOKE DETECTORS, SPEAKERS, VIDEO, WIRELESS ACCESS POINTS AND RECESSED DOWN LIGHTS PLACED IN A 2'X2' CEILING TILE TO BE CENTERED IN THE EXACT CENTER OF THE TILE.
3. ALL SUPPLY GRILLES, RETURN REGISTERS, SPRINKLER HEADS, SMOKE DETECTORS, LIGHTS, SPEAKERS, VIDEO, WIRELESS ACCESS POINTS AND EXIT SIGNS TO BE LOCATED ON COORDINATION DRAWINGS. FINAL PLACEMENT TO BE APPROVED BY ARCHITECT.
4. DIVISION 078100, 078400, 092123, 092216 AND 092900 REFER TO DRAWINGS G0.1, G0.2, G0.3, G0.4 AND G0.5 FOR ROOMS (AREAS) THAT ARE REQUIRED TO HAVE FIRE RATED CEILING/FLOOR AND WALL ASSEMBLIES.
5. PAINT CONCEALED SPRINKLER HEAD COVERS AT WOOD CEILING TO MATCH WOOD SPECIES.
6. PAINT CONCEALED SPRINKLER HEAD COVERS AT GWB CEILING TO MATCH CEILING PAINT COLOR.
7. ACOUSTICAL CEILING FILED SUB-CONTRACTOR IS TO THOROUGHLY COORDINATE EQUIPMENT, DEVICES, AND SPRINKLER HEADS NOTED ON THE FIRE PROTECTION DRAWINGS, ELECTRICAL DRAWINGS, MECHANICAL DRAWINGS, AND TECHNOLOGY DRAWINGS.
8. DIVISION 079200 TO PROVIDE JOINT SEALANT AT ALL GWB SOFFITS THAT ABUT DIFFERENT MATERIALS.
9. ALL SOFFITS TO ALIGN WITH ADJACENT SURFACE, UNLESS NOTED OTHERWISE.

90% CONSTRUCTION DOCUMENTS

NOT FOR CONSTRUCTION

NORTH ARROW

KEYPLAN

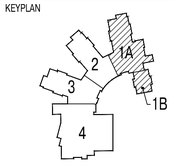

DRAWING NAME:

SECOND FLOOR REFLECTED CEILING PLAN ZONE 1

DRAWN BY:	JMR/MJR/ETF
REVIEWED BY:	BPH
SCALE:	As Noted
JOB NO.:	1403.00
DATE:	July 25, 2016
DRAWING NUMBER:	A2.21

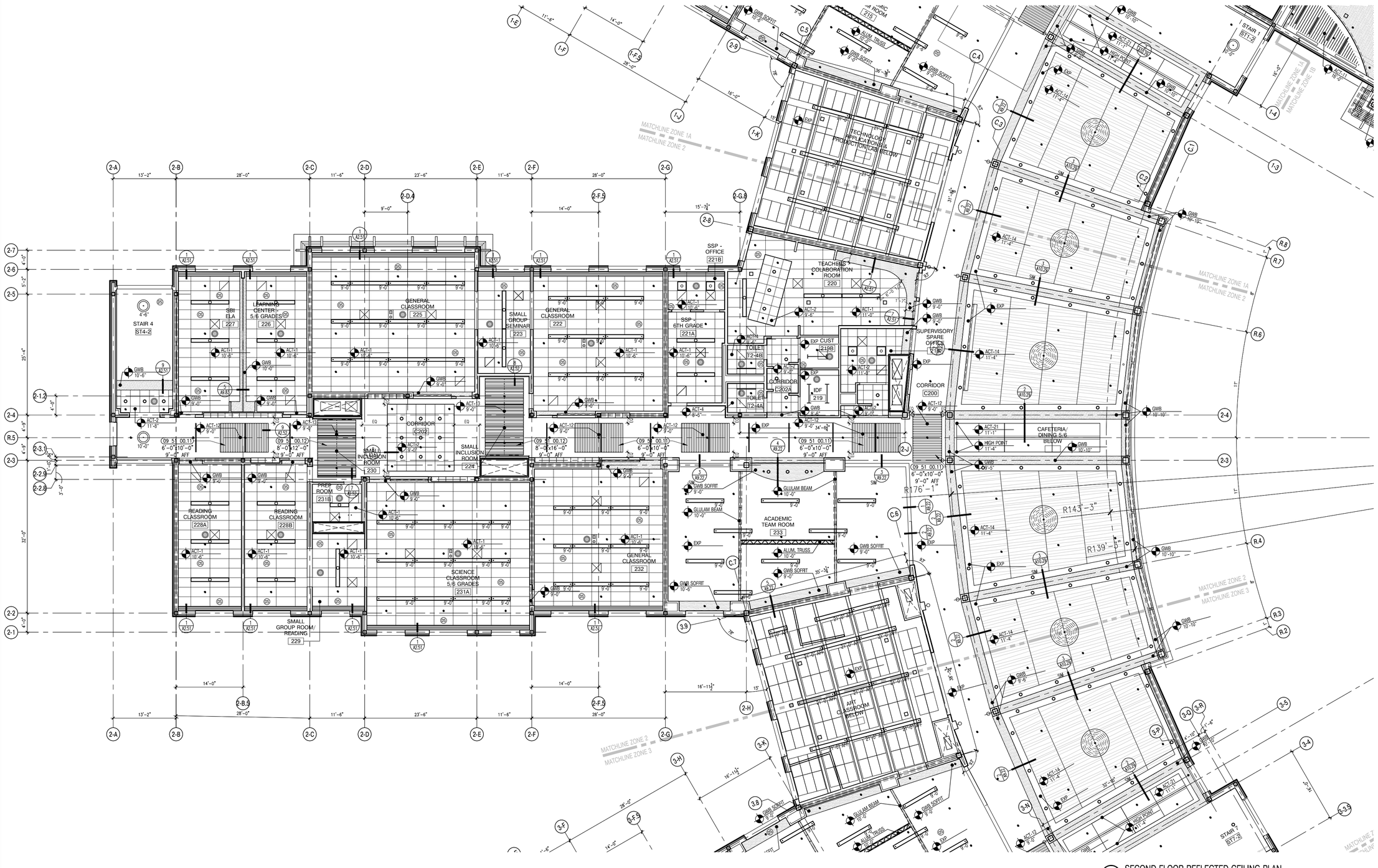

1 SECOND FLOOR REFLECTED CEILING PLAN
1/8"=1'-0"

A13 architects
526 Boston Post Rd Wayland, MA
508.358.0790 www.a13architects.com

BEVERLY MIDDLE SCHOOL

CABOT STREET
BEVERLY, MA 01915

Copyright © 2016 A13 Architects, LLC

REFLECTED CEILING PLAN LEGEND:

- SUPPLY GRILL– SEE MECH.
- RETURN GRILL– SEE MECH.
- GWB SOFFIT
- WOOD VENEER TILE
- OCCUPANCY SENSOR– SEE ELEC.
- DAYLIGHT SENSOR– SEE ELEC.
- ACOUSTIC PANEL– ABSORPTIVE
- ACOUSTIC PANEL– REFLECTIVE
- STAGE LIGHTING– SEE ELEC. AND THEATER
- STRIP LIGHT FIXTURE– SEE ELEC.
- SCONCE LIGHT FIXTURE– SEE ELEC.
- RECESSED LIGHT FIXTURE– SEE ELEC.
- LINEAR PENDANT LIGHT FIXTURE– SEE ELEC. (MOUNTING HEIGHT AS NOTED) X-XX
- PENDANT LIGHT FIXTURE– SEE ELEC.
- DOWN LIGHT– SEE ELEC.
- TRACK LIGHTING FIXTURE– SEE ELEC.

GENERAL NOTES:

1. ALL CEILING MOUNTED ITEMS, INCLUDING SPRINKLER HEADS, SMOKE DETECTORS, SPEAKERS, VIDEO, WIRELESS ACCESS POINTS AND RECESSED DOWN LIGHTS, PLACED IN A 2'X4' CEILING TILE ARE TO BE ON CENTERLINE OF 2'–0" DIMENSION AND TO BE AT 1'–0" OFF EITHER END OR IN THE EXACT CENTER OF THE 4'–0" DIMENSION.
2. ALL CEILING MOUNTED ITEMS INCLUDING SPRINKLER HEADS, SMOKE DETECTORS, SPEAKERS, VIDEO, WIRELESS ACCESS POINTS AND RECESSED DOWN LIGHTS PLACED IN A 2'X2' CEILING TILE TO BE CENTERED IN THE EXACT CENTER OF THE TILE.
3. ALL SUPPLY GRILLES, RETURN REGISTERS, SPRINKLER HEADS, SMOKE DETECTORS, LIGHTS, SPEAKERS, VIDEO, WIRELESS ACCESS POINTS AND EXIT SIGNS TO BE LOCATED ON COORDINATION DRAWINGS. FINAL PLACEMENT TO BE APPROVED BY ARCHITECT.
4. DIVISION 078100, 078400, 092123, 092216 AND 092900 REFER TO DRAWINGS G0.1, G0.2, G0.3, G0.4 AND G0.5 FOR ROOMS (AREAS) THAT ARE REQUIRED TO HAVE FIRE RATED CEILING/FLOOR AND WALL ASSEMBLIES.
5. PAINT CONCEALED SPRINKLER HEAD COVERS AT WOOD CEILING TO MATCH WOOD SPECIES.
6. PAINT CONCEALED SPRINKLER HEAD COVERS AT GWB CEILING TO MATCH CEILING PAINT COLOR.
7. ACOUSTICAL CEILING FILED SUB-CONTRACTOR IS TO THOROUGHLY COORDINATE EQUIPMENT, DEVICES, AND SPRINKLER HEADS NOTED ON THE FIRE PROTECTION DRAWINGS, ELECTRICAL DRAWINGS, MECHANICAL DRAWINGS, AND TECHNOLOGY DRAWINGS.
8. DIVISION 079200 TO PROVIDE JOINT SEALANT AT ALL GWB SOFFITS THAT ABUT DIFFERENT MATERIALS.
9. ALL SOFFITS TO ALIGN WITH ADJACENT SURFACE, UNLESS NOTED OTHERWISE.

90% CONSTRUCTION DOCUMENTS

NOT FOR CONSTRUCTION

NORTH ARROW

KEYPLAN

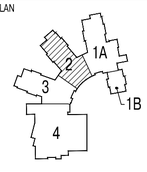

DRAWING NAME:

SECOND FLOOR REFLECTED CEILING PLAN ZONE 2

DRAWN BY:	JMR/MJR/ETF
REVIEWED BY:	BPH
SCALE:	As Noted
JOB NO.:	1403.00
DATE:	July 25, 2016
DRAWING NUMBER:	A2.22

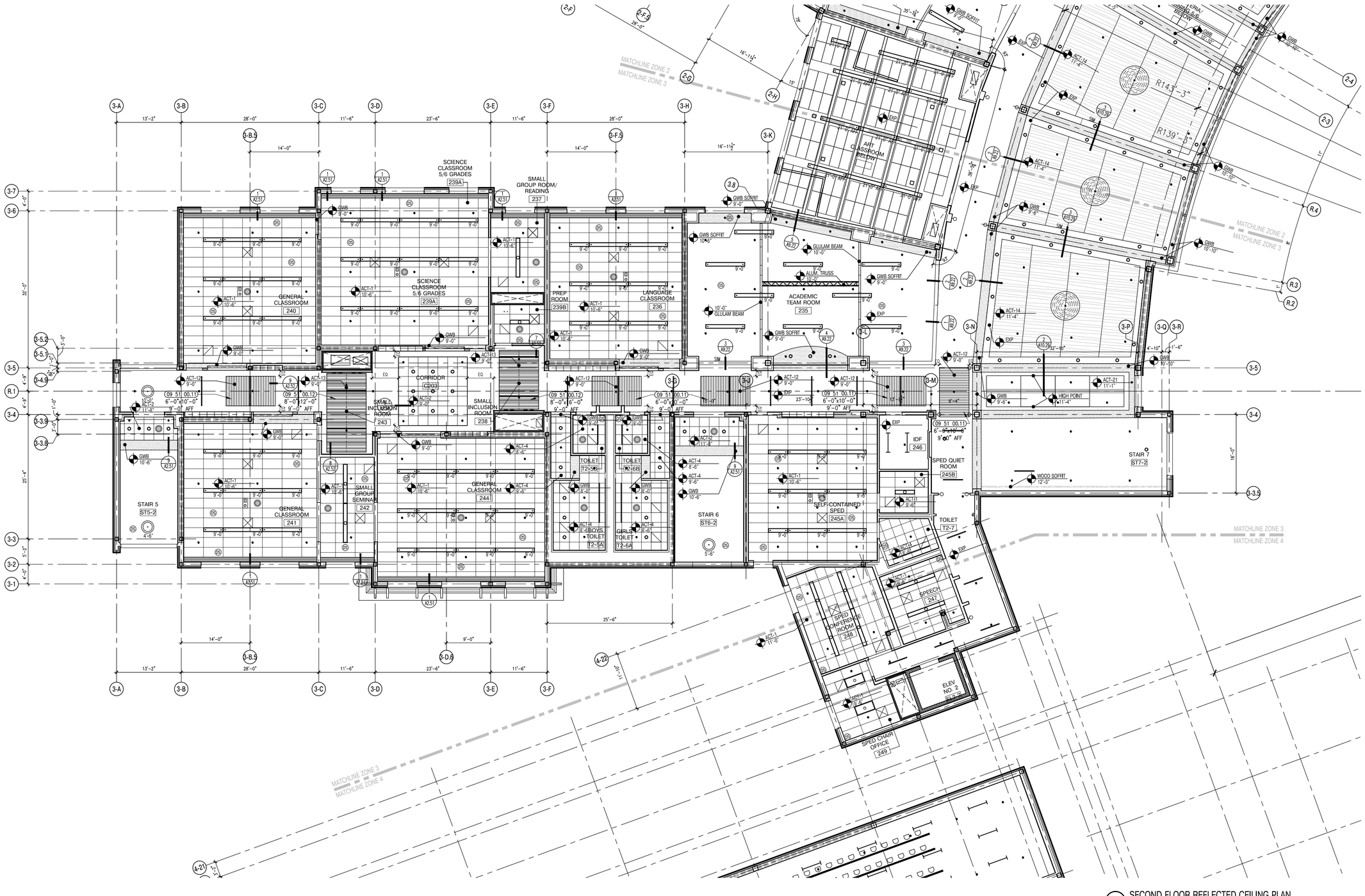

1 SECOND FLOOR REFLECTED CEILING PLAN
1/8"=1'-0"

A13 architects
526 Boston Post Rd Wayland, MA
508.358.0790 www.a13architects.com

Copyright © 2016 A13 Architects, LLC

BEVERLY MIDDLE SCHOOL

CABOT STREET
BEVERLY, MA 01915

REFLECTED CEILING PLAN LEGEND:

- SUPPLY GRILL– SEE MECH.
- RETURN GRILL– SEE MECH.
- GWB SOFFIT
- WOOD VENEER TILE
- OCCUPANCY SENSOR– SEE ELEC.
- DAYLIGHT SENSOR– SEE ELEC.
- ACOUSTIC PANEL– ABSORPTIVE
- ACOUSTIC PANEL– REFLECTIVE
- STAGE LIGHTING– SEE ELEC. AND THEATER
- STRIP LIGHT FIXTURE– SEE ELEC.
- SCONCE LIGHT FIXTURE– SEE ELEC.
- RECESSED LIGHT FIXTURE– SEE ELEC.
- LINEAR PENDANT LIGHT FIXTURE– SEE ELEC. (MOUNTING HEIGHT AS NOTED)
- PENDANT LIGHT FIXTURE– SEE ELEC.
- DOWN LIGHT– SEE ELEC.
- TRACK LIGHTING FIXTURE– SEE ELEC.

GENERAL NOTES:

1. ALL CEILING MOUNTED ITEMS, INCLUDING SPRINKLER HEADS, SMOKE DETECTORS, SPEAKERS, VIDEO, WIRELESS ACCESS POINTS AND RECESSED DOWN LIGHTS, PLACED IN A 2'X4' CEILING TILE ARE TO BE ON CENTERLINE OF 2'–0" DIMENSION AND TO BE AT 1'–0" OFF EITHER END OR IN THE EXACT CENTER OF THE 4'–0" DIMENSION.
2. ALL CEILING MOUNTED ITEMS INCLUDING SPRINKLER HEADS, SMOKE DETECTORS, SPEAKERS, VIDEO, WIRELESS ACCESS POINTS AND RECESSED DOWN LIGHTS PLACED IN A 2'X2' CEILING TILE TO BE CENTERED IN THE EXACT CENTER OF THE TILE.
3. ALL SUPPLY GRILLES, RETURN REGISTERS, SPRINKLER HEADS, SMOKE DETECTORS, LIGHTS, SPEAKERS, VIDEO, WIRELESS ACCESS POINTS AND EXIT SIGNS TO BE LOCATED ON COORDINATION DRAWINGS. FINAL PLACEMENT TO BE APPROVED BY ARCHITECT.
4. DIVISION 078100, 078400, 092123, 092216 AND 092900 REFER TO DRAWINGS G0.1, G0.2, G0.3, G0.4 AND G0.5 FOR ROOMS (AREAS) THAT ARE REQUIRED TO HAVE FIRE RATED CEILING/FLOOR AND WALL ASSEMBLIES.
5. PAINT CONCEALED SPRINKLER HEAD COVERS AT WOOD CEILING TO MATCH WOOD SPECIES.
6. PAINT CONCEALED SPRINKLER HEAD COVERS AT GWB CEILING TO MATCH CEILING PAINT COLOR.
7. ACOUSTICAL CEILING FILED SUB-CONTRACTOR IS TO THOROUGHLY COORDINATE EQUIPMENT, DEVICES, AND SPRINKLER HEADS NOTED ON THE FIRE PROTECTION DRAWINGS, ELECTRICAL DRAWINGS, MECHANICAL DRAWINGS, AND TECHNOLOGY DRAWINGS.
8. DIVISION 079200 TO PROVIDE JOINT SEALANT AT ALL GWB SOFFITS THAT ABUT DIFFERENT MATERIALS.
9. ALL SOFFITS TO ALIGN WITH ADJACENT SURFACE, UNLESS NOTED OTHERWISE.

90% CONSTRUCTION DOCUMENTS

NOT FOR CONSTRUCTION

NORTH ARROW

KEYPLAN

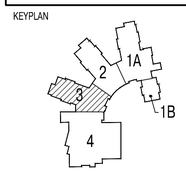

DRAWING NAME:

SECOND FLOOR REFLECTED CEILING PLAN ZONE 3

DRAWN BY:	JMR/MJR
REVIEWED BY:	BPH
SCALE:	As Noted
JOB NO.:	1403.00
DATE:	July 25, 2016
DRAWING NUMBER:	A2.23

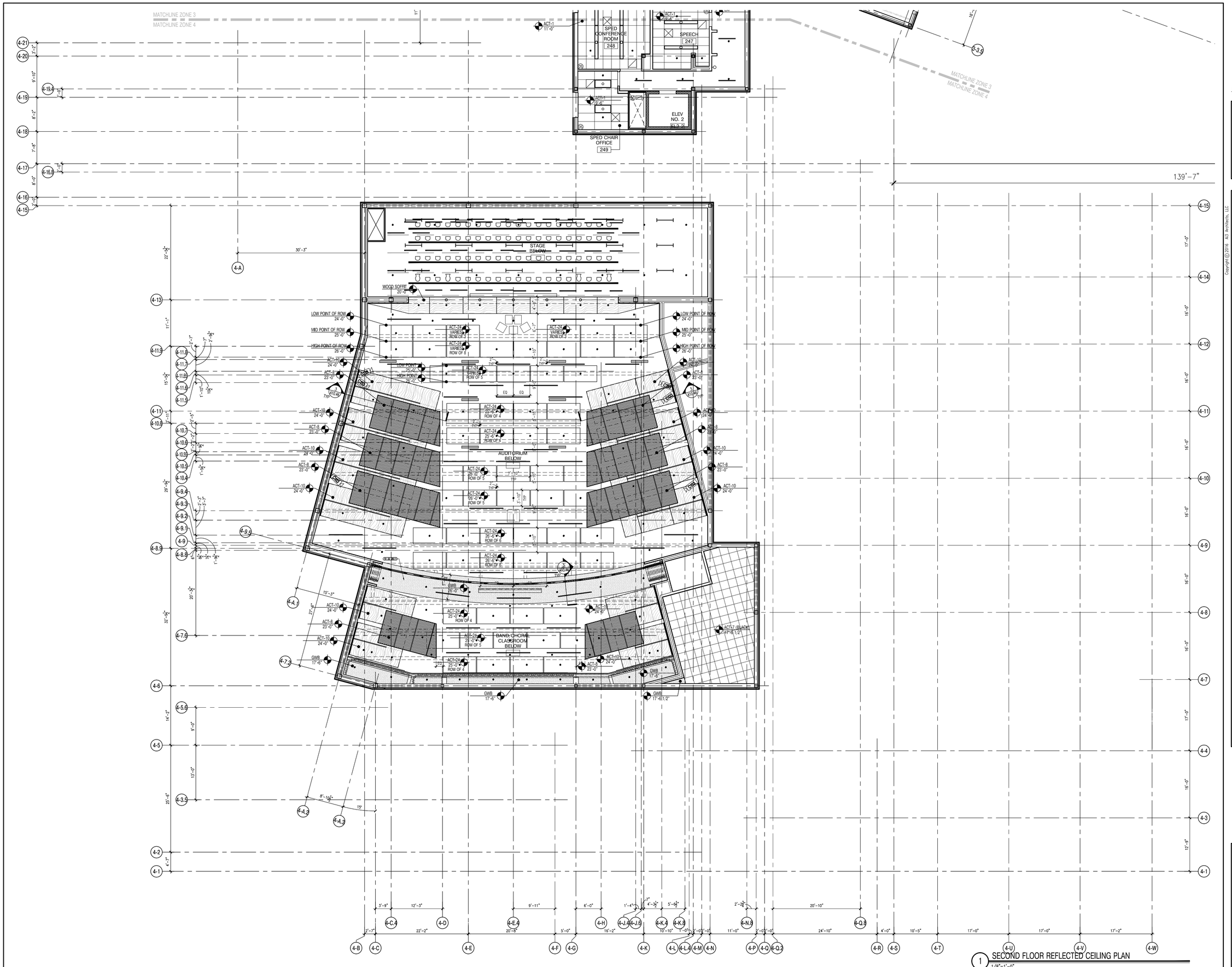

1 SECOND FLOOR REFLECTED CEILING PLAN
1/8"=1'-0"

A13 architects
526 Boston Post Rd Wayland, MA
508.358.0790 www.a13architects.com

BEVERLY MIDDLE SCHOOL

CABOT STREET
BEVERLY, MA 01915

Copyright © 2016 A13 Architects, LLC

REFLECTED CEILING PLAN LEGEND:

- SUPPLY GRILL– SEE MECH.
- RETURN GRILL– SEE MECH.
- GWB SOFFIT
- WOOD VENEER TILE
- OCCUPANCY SENSOR– SEE ELEC.
- DAYLIGHT SENSOR– SEE ELEC.
- ACOUSTIC PANEL– ABSORPTIVE
- ACOUSTIC PANEL– REFLECTIVE
- STAGE LIGHTING– SEE ELEC. AND THEATER
- STRIP LIGHT FIXTURE– SEE ELEC.
- SCONCE LIGHT FIXTURE– SEE ELEC.
- RECESSED LIGHT FIXTURE– SEE ELEC.
- LINEAR PENDANT LIGHT FIXTURE– SEE ELEC. (MOUNTING HEIGHT AS NOTED) X-XX
- PENDANT LIGHT FIXTURE– SEE ELEC.
- DOWN LIGHT– SEE ELEC.
- TRACK LIGHTING FIXTURE– SEE ELEC.

GENERAL NOTES:

1. ALL CEILING MOUNTED ITEMS, INCLUDING SPRINKLER HEADS, SMOKE DETECTORS, SPEAKERS, VIDEO, WIRELESS ACCESS POINTS AND RECESSED DOWN LIGHTS, PLACED IN A 2'X4' CEILING TILE ARE TO BE ON CENTERLINE OF 2'–0" DIMENSION AND TO BE AT 1'–0" OFF EITHER END OR IN THE EXACT CENTER OF THE 4'–0" DIMENSION.
2. ALL CEILING MOUNTED ITEMS INCLUDING SPRINKLER HEADS, SMOKE DETECTORS, SPEAKERS, VIDEO, WIRELESS ACCESS POINTS AND RECESSED DOWN LIGHTS PLACED IN A 2'X2' CEILING TILE TO BE CENTERED IN THE EXACT CENTER OF THE TILE.
3. ALL SUPPLY GRILLES, RETURN REGISTERS, SPRINKLER HEADS, SMOKE DETECTORS, LIGHTS, SPEAKERS, VIDEO, WIRELESS ACCESS POINTS AND EXIT SIGNS TO BE LOCATED ON COORDINATION DRAWINGS. FINAL PLACEMENT TO BE APPROVED BY ARCHITECT.
4. DIVISION 078100, 078400, 092123, 092216 AND 092900 REFER TO DRAWINGS G0.1, G0.2, G0.3, G0.4 AND G0.5 FOR ROOMS (AREAS) THAT ARE REQUIRED TO HAVE FIRE RATED CEILING/FLOOR AND WALL ASSEMBLIES.
5. PAINT CONCEALED SPRINKLER HEAD COVERS AT WOOD CEILING TO MATCH WOOD SPECIES.
6. PAINT CONCEALED SPRINKLER HEAD COVERS AT GWB CEILING TO MATCH CEILING PAINT COLOR.
7. ACOUSTICAL CEILING FILED SUB-CONTRACTOR IS TO THOROUGHLY COORDINATE EQUIPMENT, DEVICES, AND SPRINKLER HEADS NOTED ON THE FIRE PROTECTION DRAWINGS, ELECTRICAL DRAWINGS, MECHANICAL DRAWINGS, AND TECHNOLOGY DRAWINGS.
8. DIVISION 079200 TO PROVIDE JOINT SEALANT AT ALL GWB SOFFITS THAT ABUT DIFFERENT MATERIALS.
9. ALL SOFFITS TO ALIGN WITH ADJACENT SURFACE, UNLESS NOTED OTHERWISE.

90% CONSTRUCTION DOCUMENTS

NOT FOR CONSTRUCTION

NORTH ARROW

KEYPLAN

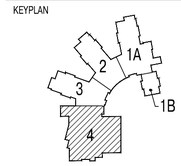

DRAWING NAME:

SECOND FLOOR REFLECTED CEILING PLAN ZONE 4

DRAWN BY:	JMR / MJR / HM / ETF
REVIEWED BY:	BPH
SCALE:	As Noted
JOB NO.:	1403.00
DATE:	July 25, 2016
DRAWING NUMBER:	A2.24

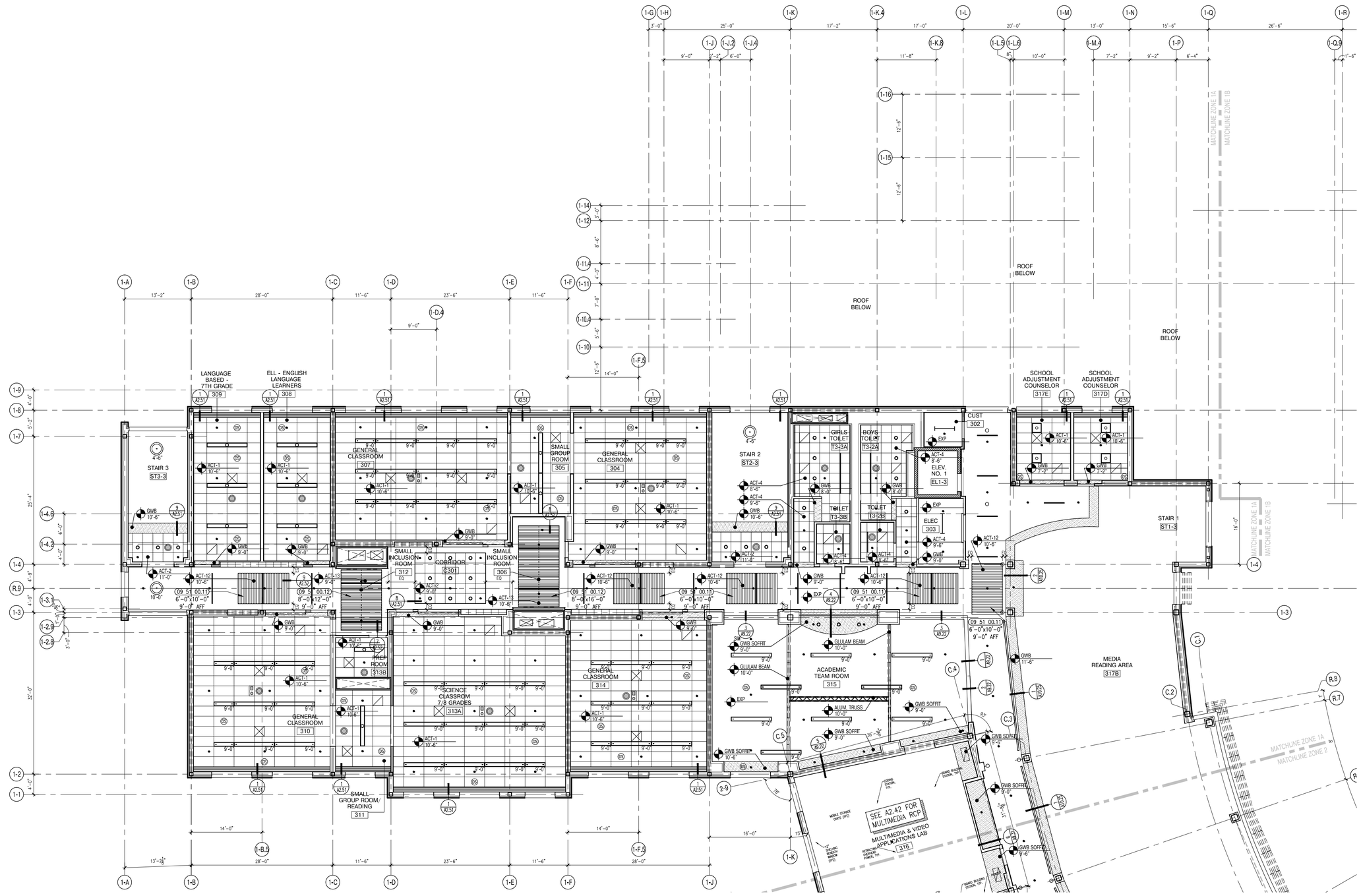

1 THIRD FLOOR REFLECTED CEILING PLAN
1/8"=1'-0"

526 Boston Post Rd Wayland, MA
508.358.0790 www.ai3architects.com

BEVERLY MIDDLE SCHOOL

CABOT STREET
BEVERLY, MA 01915

Copyright © 2016 A3 Architects, LLC

REFLECTED CEILING PLAN LEGEND:

- SUPPLY GRILL– SEE MECH.
- RETURN GRILL– SEE MECH.
- GWB SOFFIT
- WOOD VENEER TILE
- OCCUPANCY SENSOR– SEE ELEC.
- DAYLIGHT SENSOR– SEE ELEC.
- ACOUSTIC PANEL– ABSORPTIVE
- ACOUSTIC PANEL– REFLECTIVE
- STAGE LIGHTING– SEE ELEC. AND THEATER
- STRIP LIGHT FIXTURE– SEE ELEC.
- SCONCE LIGHT FIXTURE– SEE ELEC.
- RECESSED LIGHT FIXTURE– SEE ELEC.
- LINEAR PENDANT LIGHT FIXTURE– SEE ELEC. (MOUNTING HEIGHT AS NOTED)
- PENDANT LIGHT FIXTURE– SEE ELEC.
- DOWN LIGHT– SEE ELEC.
- TRACK LIGHTING FIXTURE– SEE ELEC.

GENERAL NOTES:

1. ALL CEILING MOUNTED ITEMS, INCLUDING SPRINKLER HEADS, SMOKE DETECTORS, SPEAKERS, VIDEO, WIRELESS ACCESS POINTS AND RECESSED DOWN LIGHTS, PLACED IN A 2'X4' CEILING TILE ARE TO BE ON CENTERLINE OF 2'-0" DIMENSION AND TO BE AT 1'-0" OFF EITHER END OR IN THE EXACT CENTER OF THE 4'-0" DIMENSION.
2. ALL CEILING MOUNTED ITEMS INCLUDING SPRINKLER HEADS, SMOKE DETECTORS, SPEAKERS, VIDEO, WIRELESS ACCESS POINTS AND RECESSED DOWN LIGHTS PLACED IN A 2'X2' CEILING TILE TO BE CENTERED IN THE EXACT CENTER OF THE TILE.
3. ALL SUPPLY GRILLES, RETURN REGISTERS, SPRINKLER HEADS, SMOKE DETECTORS, LIGHTS, SPEAKERS, VIDEO, WIRELESS ACCESS POINTS AND EXIT SIGNS TO BE LOCATED ON COORDINATION DRAWINGS. FINAL PLACEMENT TO BE APPROVED BY ARCHITECT.
4. DIVISION 078100, 078400, 092123, 092216 AND 092900 REFER TO DRAWINGS G0.1, G0.2, G0.3, G0.4 AND G0.5 FOR ROOMS (AREAS) THAT ARE REQUIRED TO HAVE FIRE RATED CEILING/FLOOR AND WALL ASSEMBLIES.
5. PAINT CONCEALED SPRINKLER HEAD COVERS AT WOOD CEILING TO MATCH WOOD SPECIES.
6. PAINT CONCEALED SPRINKLER HEAD COVERS AT GWB CEILING TO MATCH CEILING PAINT COLOR.
7. ACOUSTICAL CEILING FILED SUB-CONTRACTOR IS TO THOROUGHLY COORDINATE EQUIPMENT, DEVICES, AND SPRINKLER HEADS NOTED ON THE FIRE PROTECTION DRAWINGS, ELECTRICAL DRAWINGS, MECHANICAL DRAWINGS, AND TECHNOLOGY DRAWINGS.
8. DIVISION 079200 TO PROVIDE JOINT SEALANT AT ALL GWB SOFFITS THAT ABUT DIFFERENT MATERIALS.
9. ALL SOFFITS TO ALIGN WITH ADJACENT SURFACE, UNLESS NOTED OTHERWISE.

90% CONSTRUCTION DOCUMENTS

NOT FOR CONSTRUCTION

NORTH ARROW

KEYPLAN

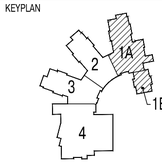

DRAWING NAME:

THIRD FLOOR REFLECTED CEILING PLAN ZONE 1

DRAWN BY:	JMR/MJR/ETF
REVIEWED BY:	BPH
SCALE:	As Noted
JOB NO.:	1403.00
DATE:	July 25, 2016
DRAWING NUMBER:	A2.31

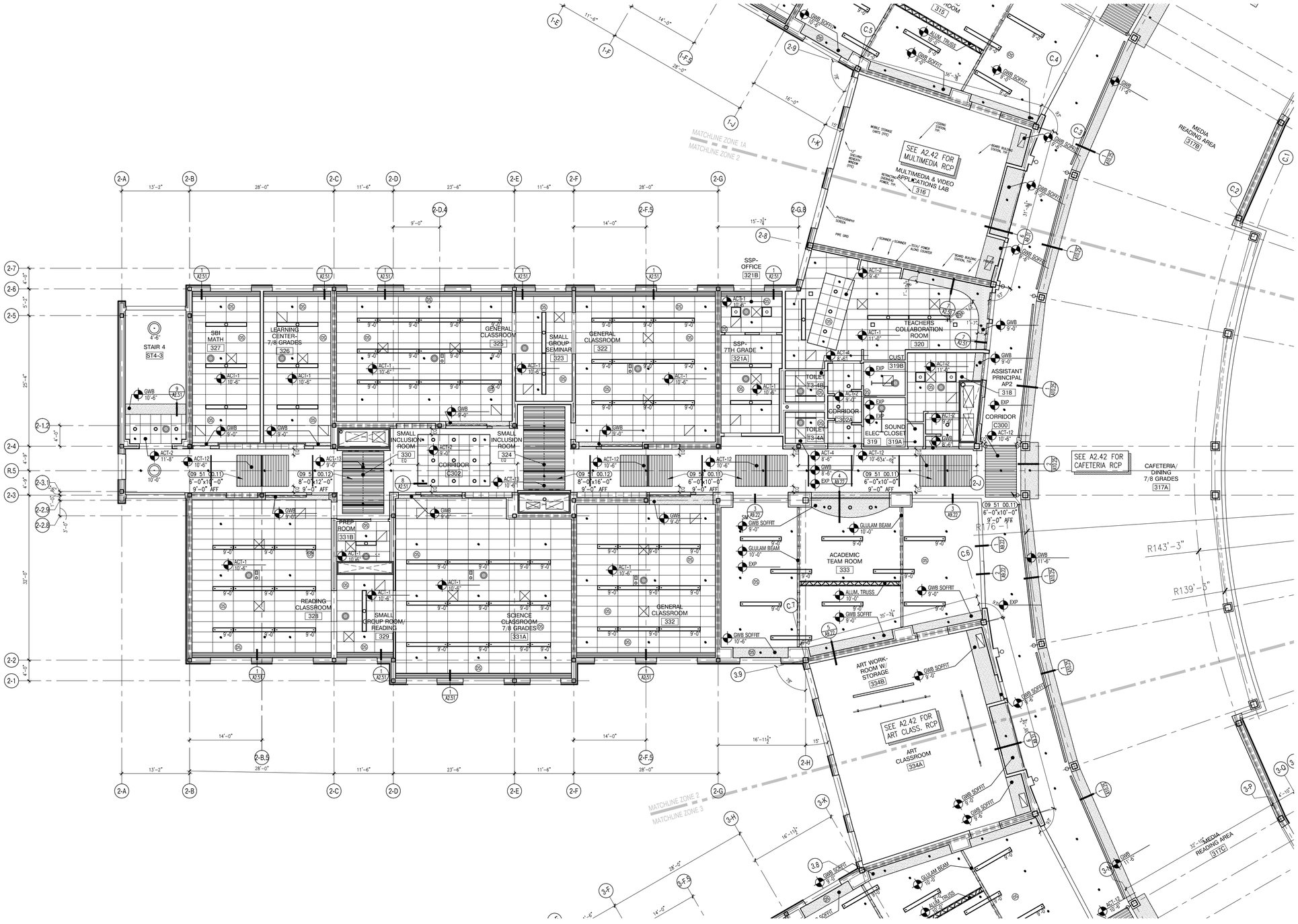

1 THIRD FLOOR REFLECTED CEILING PLAN
1/8"=1'-0"

526 Boston Post Rd Wayland, MA
508.358.0790 www.ai3architects.com

BEVERLY MIDDLE SCHOOL

CABOT STREET
BEVERLY, MA 01915

Copyright © 2016 A13 Architects, LLC

REFLECTED CEILING PLAN LEGEND:

- SUPPLY GRILL– SEE MECH.
- RETURN GRILL– SEE MECH.
- GWB SOFFIT
- WOOD VENEER TILE
- OCCUPANCY SENSOR– SEE ELEC.
- DAYLIGHT SENSOR– SEE ELEC.
- ACOUSTIC PANEL– ABSORPTIVE
- ACOUSTIC PANEL– REFLECTIVE
- STAGE LIGHTING– SEE ELEC. AND THEATER
- STRIP LIGHT FIXTURE– SEE ELEC.
- SCONCE LIGHT FIXTURE– SEE ELEC.
- RECESSED LIGHT FIXTURE– SEE ELEC.
- LINEAR PENDANT LIGHT FIXTURE– SEE ELEC. (MOUNTING HEIGHT AS NOTED)
- PENDANT LIGHT FIXTURE– SEE ELEC.
- DOWN LIGHT– SEE ELEC.
- TRACK LIGHTING FIXTURE– SEE ELEC.

GENERAL NOTES:

1. ALL CEILING MOUNTED ITEMS, INCLUDING SPRINKLER HEADS, SMOKE DETECTORS, SPEAKERS, VIDEO, WIRELESS ACCESS POINTS AND RECESSED DOWN LIGHTS, PLACED IN A 2'X4' CEILING TILE ARE TO BE ON CENTERLINE OF 2'–0" DIMENSION AND TO BE AT 1'–0" OFF EITHER END OR IN THE EXACT CENTER OF THE 4'–0" DIMENSION.
2. ALL CEILING MOUNTED ITEMS INCLUDING SPRINKLER HEADS, SMOKE DETECTORS, SPEAKERS, VIDEO, WIRELESS ACCESS POINTS AND RECESSED DOWN LIGHTS PLACED IN A 2'X2' CEILING TILE TO BE CENTERED IN THE EXACT CENTER OF THE TILE.
3. ALL SUPPLY GRILLES, RETURN REGISTERS, SPRINKLER HEADS, SMOKE DETECTORS, LIGHTS, SPEAKERS, VIDEO, WIRELESS ACCESS POINTS AND EXIT SIGNS TO BE LOCATED ON COORDINATION DRAWINGS. FINAL PLACEMENT TO BE APPROVED BY ARCHITECT.
4. DIVISION 078100, 078400, 092123, 092216 AND 092900 REFER TO DRAWINGS G0.1, G0.2, G0.3, G0.4 AND G0.5 FOR ROOMS (AREAS) THAT ARE REQUIRED TO HAVE FIRE RATED CEILING/FLOOR AND WALL ASSEMBLIES.
5. PAINT CONCEALED SPRINKLER HEAD COVERS AT WOOD CEILING TO MATCH WOOD SPECIES.
6. PAINT CONCEALED SPRINKLER HEAD COVERS AT GWB CEILING TO MATCH CEILING PAINT COLOR.
7. ACOUSTICAL CEILING FILED SUB–CONTRACTOR IS TO THOROUGHLY COORDINATE EQUIPMENT, DEVICES, AND SPRINKLER HEADS NOTED ON THE FIRE PROTECTION DRAWINGS, ELECTRICAL DRAWINGS, MECHANICAL DRAWINGS, AND TECHNOLOGY DRAWINGS.
8. DIVISION 079200 TO PROVIDE JOINT SEALANT AT ALL GWB SOFFITS THAT ABUT DIFFERENT MATERIALS.
9. ALL SOFFITS TO ALIGN WITH ADJACENT SURFACE, UNLESS NOTED OTHERWISE.

90% CONSTRUCTION DOCUMENTS

NOT FOR CONSTRUCTION

NORTH ARROW

KEYPLAN

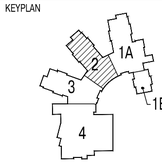

DRAWING NAME:

THIRD FLOOR REFLECTED CEILING PLAN ZONE 2

DRAWN BY:	JMR/MJR/ETF
REVIEWED BY:	BPH
SCALE:	As Noted
JOB NO.:	1403.00
DATE:	July 25, 2016
DRAWING NUMBER:	A2.32

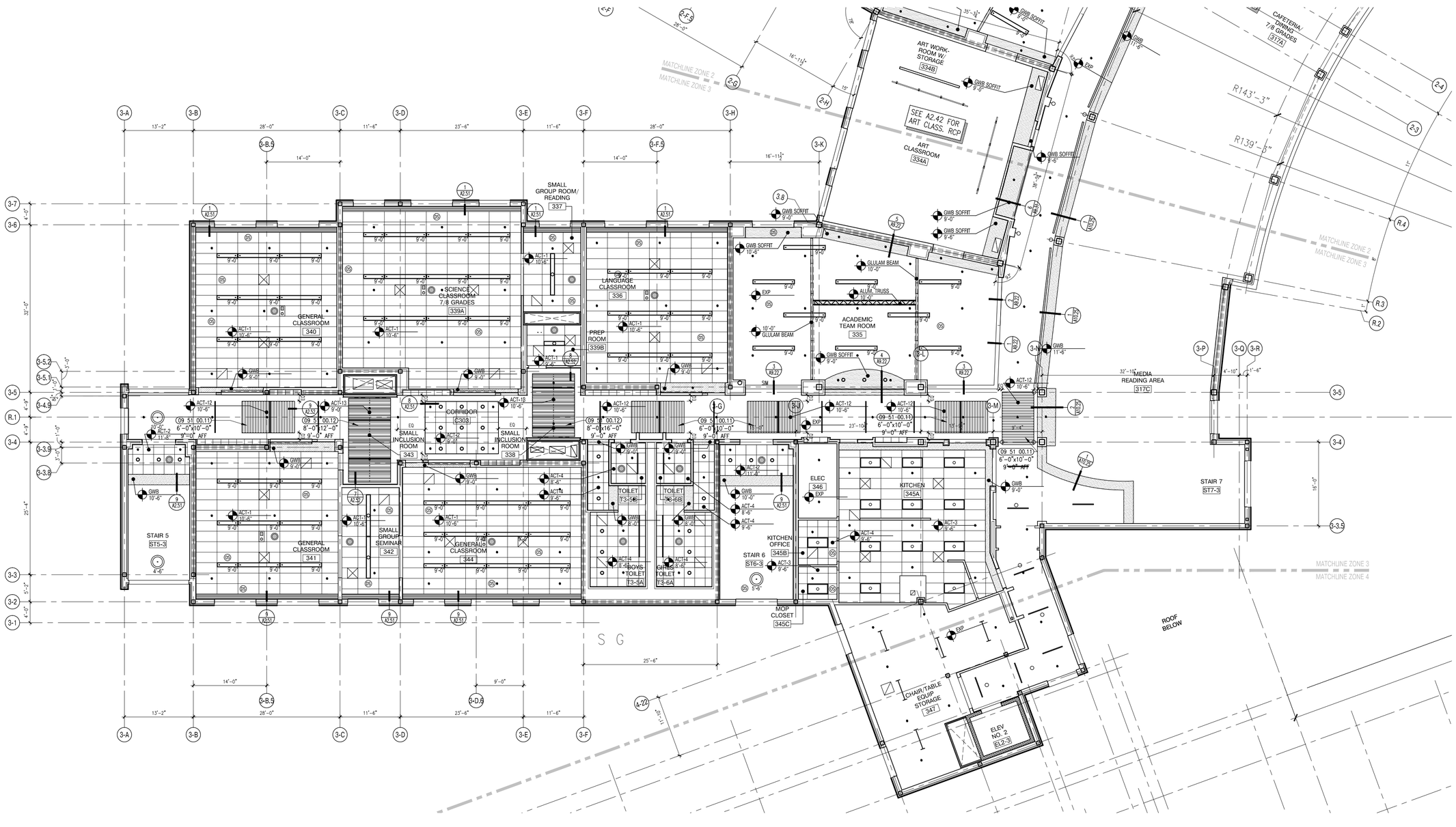

1 THIRD FLOOR REFLECTED CEILING PLAN
1/8"=1'-0"

A13 architects
526 Boston Post Rd Wayland, MA
508.358.0790 www.a13architects.com

Copyright © 2016 A13 Architects, LLC

BEVERLY MIDDLE SCHOOL

CABOT STREET
BEVERLY, MA 01915

REFLECTED CEILING PLAN LEGEND:

- SUPPLY GRILL– SEE MECH.
- RETURN GRILL– SEE MECH.
- GWB SOFFIT
- WOOD VENEER TILE
- OCCUPANCY SENSOR– SEE ELEC.
- DAYLIGHT SENSOR– SEE ELEC.
- ACOUSTIC PANEL– ABSORPTIVE
- ACOUSTIC PANEL– REFLECTIVE
- STAGE LIGHTING– SEE ELEC. AND THEATER
- STRIP LIGHT FIXTURE– SEE ELEC.
- SCONCE LIGHT FIXTURE– SEE ELEC.
- RECESSED LIGHT FIXTURE– SEE ELEC.
- LINEAR PENDANT LIGHT FIXTURE– SEE ELEC. (MOUNTING HEIGHT AS NOTED) X'-XX"
- PENDANT LIGHT FIXTURE– SEE ELEC.
- DOWN LIGHT– SEE ELEC.
- TRACK LIGHTING FIXTURE– SEE ELEC.

GENERAL NOTES:

1. ALL CEILING MOUNTED ITEMS, INCLUDING SPRINKLER HEADS, SMOKE DETECTORS, SPEAKERS, VIDEO, WIRELESS ACCESS POINTS AND RECESSED DOWN LIGHTS, PLACED IN A 2'X4' CEILING TILE ARE TO BE ON CENTERLINE OF 2'–0" DIMENSION AND TO BE AT 1'–0" OFF EITHER END OR IN THE EXACT CENTER OF THE 4'–0" DIMENSION.
2. ALL CEILING MOUNTED ITEMS INCLUDING SPRINKLER HEADS, SMOKE DETECTORS, SPEAKERS, VIDEO, WIRELESS ACCESS POINTS AND RECESSED DOWN LIGHTS PLACED IN A 2'X2' CEILING TILE TO BE CENTERED IN THE EXACT CENTER OF THE TILE.
3. ALL SUPPLY GRILLES, RETURN REGISTERS, SPRINKLER HEADS, SMOKE DETECTORS, LIGHTS, SPEAKERS, VIDEO, WIRELESS ACCESS POINTS AND EXIT SIGNS TO BE LOCATED ON COORDINATION DRAWINGS. FINAL PLACEMENT TO BE APPROVED BY ARCHITECT.
4. DIVISION 078100, 078400, 092123, 092216 AND 092900 REFER TO DRAWINGS G0.1, G0.2, G0.3, G0.4 AND G0.5 FOR ROOMS (AREAS) THAT ARE REQUIRED TO HAVE FIRE RATED CEILING/FLOOR AND WALL ASSEMBLIES.
5. PAINT CONCEALED SPRINKLER HEAD COVERS AT WOOD CEILING TO MATCH WOOD SPECIES.
6. PAINT CONCEALED SPRINKLER HEAD COVERS AT GWB CEILING TO MATCH CEILING PAINT COLOR.
7. ACOUSTICAL CEILING FILED SUB-CONTRACTOR IS TO THOROUGHLY COORDINATE EQUIPMENT, DEVICES, AND SPRINKLER HEADS NOTED ON THE FIRE PROTECTION DRAWINGS, ELECTRICAL DRAWINGS, MECHANICAL DRAWINGS, AND TECHNOLOGY DRAWINGS.
8. DIVISION 079200 TO PROVIDE JOINT SEALANT AT ALL GWB SOFFITS THAT ABUT DIFFERENT MATERIALS.
9. ALL SOFFITS TO ALIGN WITH ADJACENT SURFACE, UNLESS NOTED OTHERWISE.

90% CONSTRUCTION DOCUMENTS

NOT FOR CONSTRUCTION

NORTH ARROW

KEYPLAN

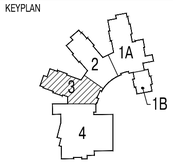

DRAWING NAME:

THIRD FLOOR REFLECTED CEILING PLAN ZONE 3

DRAWN BY:	JMR/MJR/ETF
REVIEWED BY:	BPH
SCALE:	As Noted
JOB NO.:	1403.00
DATE:	July 25, 2016
DRAWING NUMBER:	A2.33

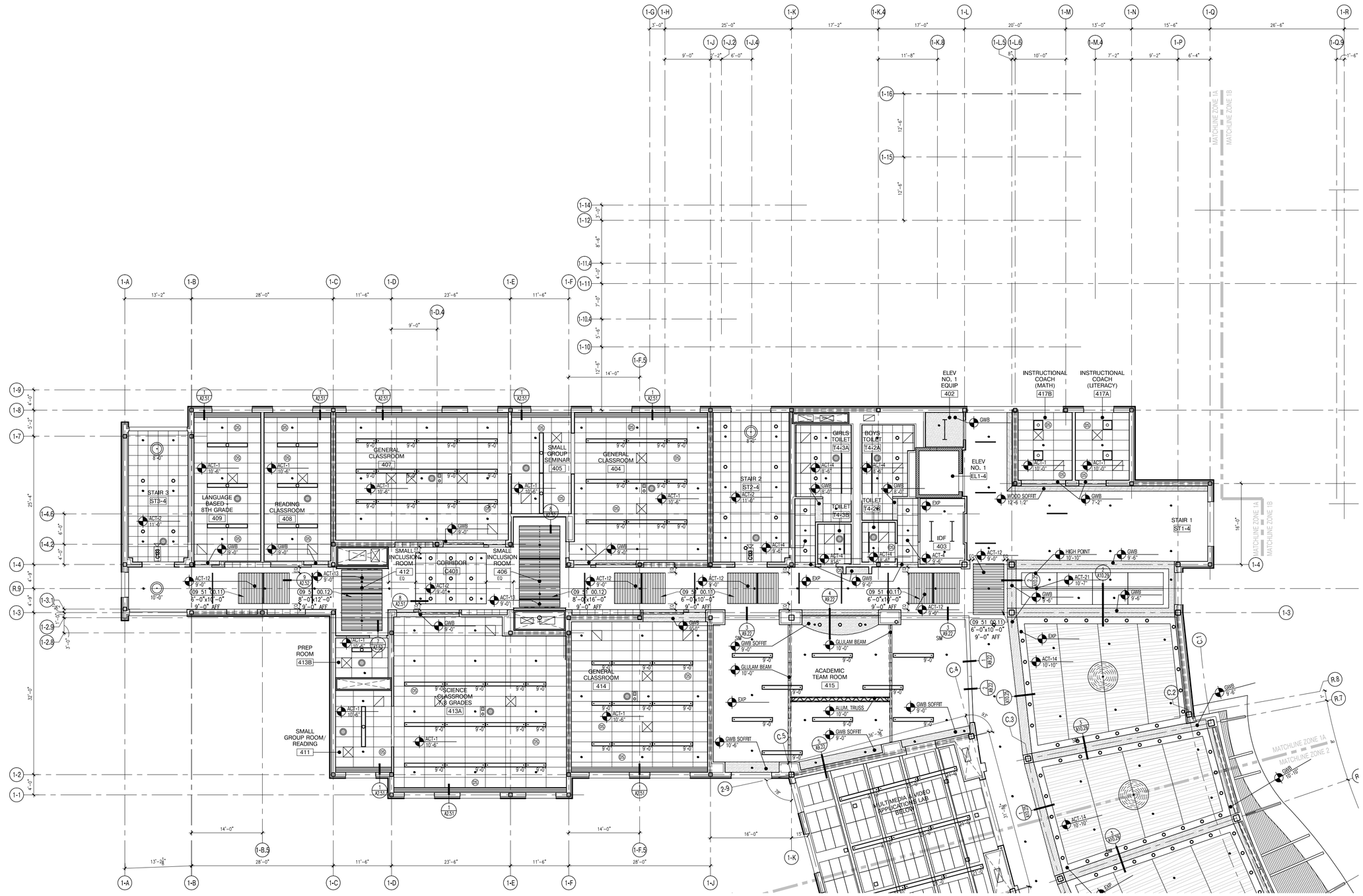

1 FOURTH FLOOR REFLECTED CEILING PLAN
1/8"=1'-0"

A13 architects
526 Boston Post Rd Wayland, MA
508.358.0790 www.a13architects.com

Copyright © 2016 A13 Architects, LLC

BEVERLY MIDDLE SCHOOL

CABOT STREET
BEVERLY, MA 01915

REFLECTED CEILING PLAN LEGEND:

- SUPPLY GRILL– SEE MECH.
- RETURN GRILL– SEE MECH.
- GWB SOFFIT
- WOOD VENEER TILE
- OCCUPANCY SENSOR– SEE ELEC.
- DAYLIGHT SENSOR– SEE ELEC.
- ACOUSTIC PANEL– ABSORPTIVE
- ACOUSTIC PANEL– REFLECTIVE
- STAGE LIGHTING– SEE ELEC. AND THEATER
- STRIP LIGHT FIXTURE– SEE ELEC.
- SCONCE LIGHT FIXTURE– SEE ELEC.
- RECESSED LIGHT FIXTURE– SEE ELEC.
- LINEAR PENDANT LIGHT FIXTURE– SEE ELEC. (MOUNTING HEIGHT AS NOTED)
- PENDANT LIGHT FIXTURE– SEE ELEC.
- DOWN LIGHT– SEE ELEC.
- TRACK LIGHTING FIXTURE– SEE ELEC.

GENERAL NOTES:

1. ALL CEILING MOUNTED ITEMS, INCLUDING SPRINKLER HEADS, SMOKE DETECTORS, SPEAKERS, VIDEO, WIRELESS ACCESS POINTS AND RECESSED DOWN LIGHTS, PLACED IN A 2'X4' CEILING TILE ARE TO BE ON CENTERLINE OF 2'-0" DIMENSION AND TO BE AT 1'-0" OFF EITHER END OR IN THE EXACT CENTER OF THE 4'-0" DIMENSION.
2. ALL CEILING MOUNTED ITEMS INCLUDING SPRINKLER HEADS, SMOKE DETECTORS, SPEAKERS, VIDEO, WIRELESS ACCESS POINTS AND RECESSED DOWN LIGHTS PLACED IN A 2'X2' CEILING TILE TO BE CENTERED IN THE EXACT CENTER OF THE TILE.
3. ALL SUPPLY GRILLES, RETURN REGISTERS, SPRINKLER HEADS, SMOKE DETECTORS, LIGHTS, SPEAKERS, VIDEO, WIRELESS ACCESS POINTS AND EXIT SIGNS TO BE LOCATED ON COORDINATION DRAWINGS. FINAL PLACEMENT TO BE APPROVED BY ARCHITECT.
4. DIVISION 078100, 078400, 092123, 092216 AND 092900 REFER TO DRAWINGS G0.1, G0.2, G0.3, G0.4 AND G0.5 FOR ROOMS (AREAS) THAT ARE REQUIRED TO HAVE FIRE RATED CEILING/FLOOR AND WALL ASSEMBLIES.
5. PAINT CONCEALED SPRINKLER HEAD COVERS AT WOOD CEILING TO MATCH WOOD SPECIES.
6. PAINT CONCEALED SPRINKLER HEAD COVERS AT GWB CEILING TO MATCH CEILING PAINT COLOR.
7. ACOUSTICAL CEILING FILED SUB-CONTRACTOR IS TO THOROUGHLY COORDINATE EQUIPMENT, DEVICES, AND SPRINKLER HEADS NOTED ON THE FIRE PROTECTION DRAWINGS, ELECTRICAL DRAWINGS, MECHANICAL DRAWINGS, AND TECHNOLOGY DRAWINGS.
8. DIVISION 079200 TO PROVIDE JOINT SEALANT AT ALL GWB SOFFITS THAT ABUT DIFFERENT MATERIALS.
9. ALL SOFFITS TO ALIGN WITH ADJACENT SURFACE, UNLESS NOTED OTHERWISE.

90% CONSTRUCTION DOCUMENTS

NOT FOR CONSTRUCTION

NORTH ARROW

KEYPLAN

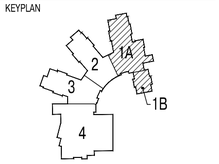

DRAWING NAME:

FOURTH FLOOR REFLECTED CEILING PLAN ZONE 1

DRAWN BY:	JMR/MJR/ETF
REVIEWED BY:	BPH
SCALE:	As Noted
JOB NO.:	1403.00
DATE:	July 25, 2016
DRAWING NUMBER:	A2.41

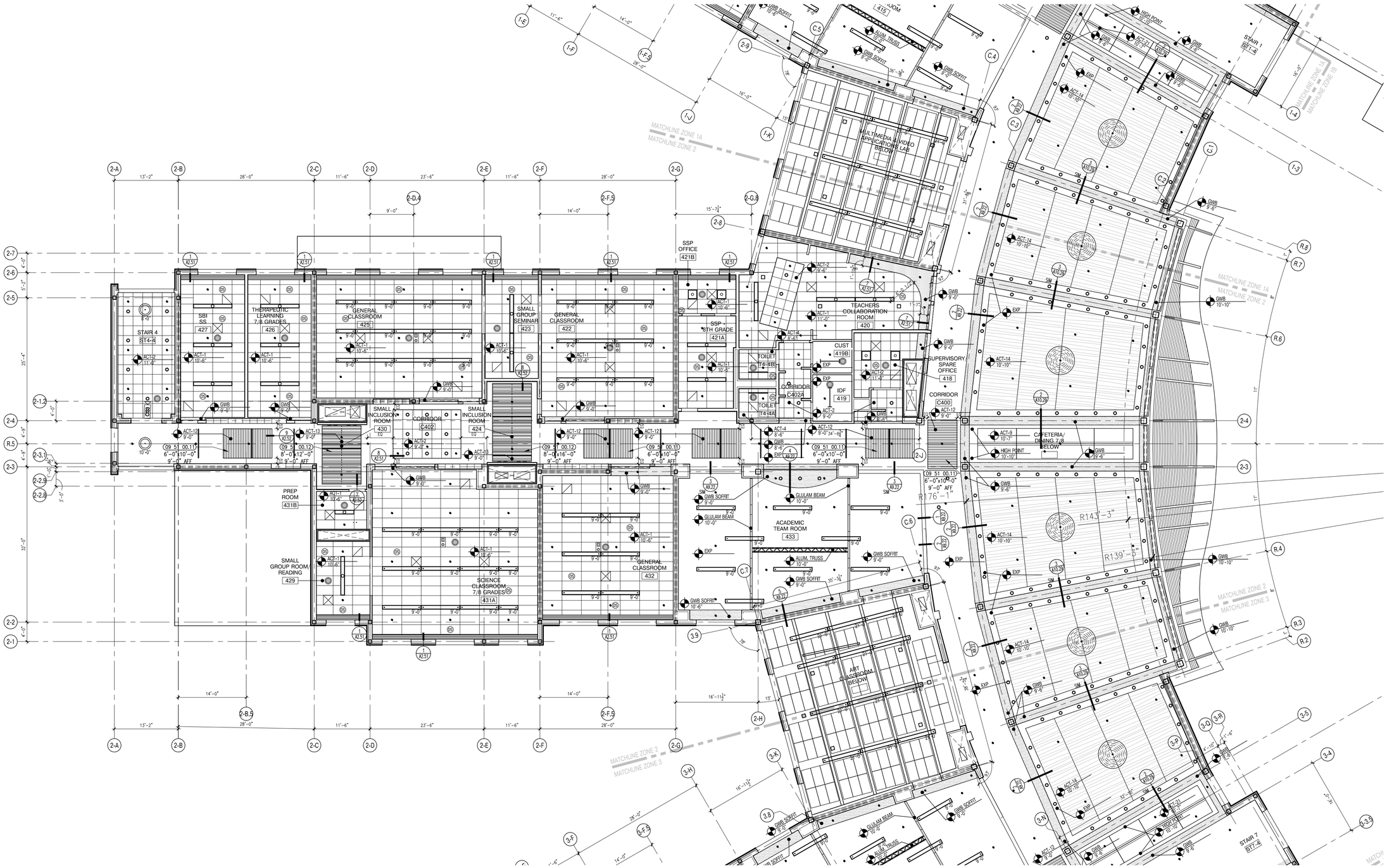

1 FOURTH FLOOR REFLECTED CEILING PLAN
1/8"=1'-0"

A13 architects
526 Boston Post Rd Wayland, MA
508.358.0790 www.a13architects.com

Copyright © 2016 A13 Architects, LLC

BEVERLY MIDDLE SCHOOL

CABOT STREET
BEVERLY, MA 01915

REFLECTED CEILING PLAN LEGEND:

- SUPPLY GRILL– SEE MECH.
- RETURN GRILL– SEE MECH.
- GWB SOFFIT
- WOOD VENEER TILE
- OCCUPANCY SENSOR– SEE ELEC.
- DAYLIGHT SENSOR– SEE ELEC.
- ACOUSTIC PANEL– ABSORPTIVE
- ACOUSTIC PANEL– REFLECTIVE
- STAGE LIGHTING– SEE ELEC. AND THEATER
- STRIP LIGHT FIXTURE– SEE ELEC.
- SCONCE LIGHT FIXTURE– SEE ELEC.
- RECESSED LIGHT FIXTURE– SEE ELEC.
- LINEAR PENDANT LIGHT FIXTURE– SEE ELEC. (MOUNTING HEIGHT AS NOTED) X-XX
- PENDANT LIGHT FIXTURE– SEE ELEC.
- DOWN LIGHT– SEE ELEC.
- TRACK LIGHTING FIXTURE– SEE ELEC.

GENERAL NOTES:

1. ALL CEILING MOUNTED ITEMS, INCLUDING SPRINKLER HEADS, SMOKE DETECTORS, SPEAKERS, VIDEO, WIRELESS ACCESS POINTS AND RECESSED DOWN LIGHTS, PLACED IN A 2'X4' CEILING TILE ARE TO BE ON CENTERLINE OF 2'–0" DIMENSION AND TO BE AT 1'–0" OFF EITHER END OR IN THE EXACT CENTER OF THE 4'–0" DIMENSION.
2. ALL CEILING MOUNTED ITEMS INCLUDING SPRINKLER HEADS, SMOKE DETECTORS, SPEAKERS, VIDEO, WIRELESS ACCESS POINTS AND RECESSED DOWN LIGHTS PLACED IN A 2'X2' CEILING TILE TO BE CENTERED IN THE EXACT CENTER OF THE TILE.
3. ALL SUPPLY GRILLES, RETURN REGISTERS, SPRINKLER HEADS, SMOKE DETECTORS, LIGHTS, SPEAKERS, VIDEO, WIRELESS ACCESS POINTS AND EXIT SIGNS TO BE LOCATED ON COORDINATION DRAWINGS. FINAL PLACEMENT TO BE APPROVED BY ARCHITECT.
4. DIVISION 078100, 078400, 092123, 092216 AND 092900 REFER TO DRAWINGS G0.1, G0.2, G0.3, G0.4 AND G0.5 FOR ROOMS (AREAS) THAT ARE REQUIRED TO HAVE FIRE RATED CEILING/FLOOR AND WALL ASSEMBLIES.
5. PAINT CONCEALED SPRINKLER HEAD COVERS AT WOOD CEILING TO MATCH WOOD SPECIES.
6. PAINT CONCEALED SPRINKLER HEAD COVERS AT GWB CEILING TO MATCH CEILING PAINT COLOR.
7. ACOUSTICAL CEILING FILED SUB-CONTRACTOR IS TO THOROUGHLY COORDINATE EQUIPMENT, DEVICES, AND SPRINKLER HEADS NOTED ON THE FIRE PROTECTION DRAWINGS, ELECTRICAL DRAWINGS, MECHANICAL DRAWINGS, AND TECHNOLOGY DRAWINGS.
8. DIVISION 079200 TO PROVIDE JOINT SEALANT AT ALL GWB SOFFITS THAT ABUT DIFFERENT MATERIALS.
9. ALL SOFFITS TO ALIGN WITH ADJACENT SURFACE, UNLESS NOTED OTHERWISE.

90% CONSTRUCTION DOCUMENTS

NOT FOR CONSTRUCTION

NORTH ARROW

KEYPLAN

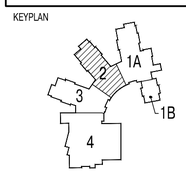

DRAWING NAME:

FOURTH FLOOR REFLECTED CEILING PLAN ZONE 2

DRAWN BY:	JMR/MJR/ETF
REVIEWED BY:	BPH
SCALE:	As Noted
JOB NO.:	1403.00
DATE:	July 25, 2016
DRAWING NUMBER:	A2.42

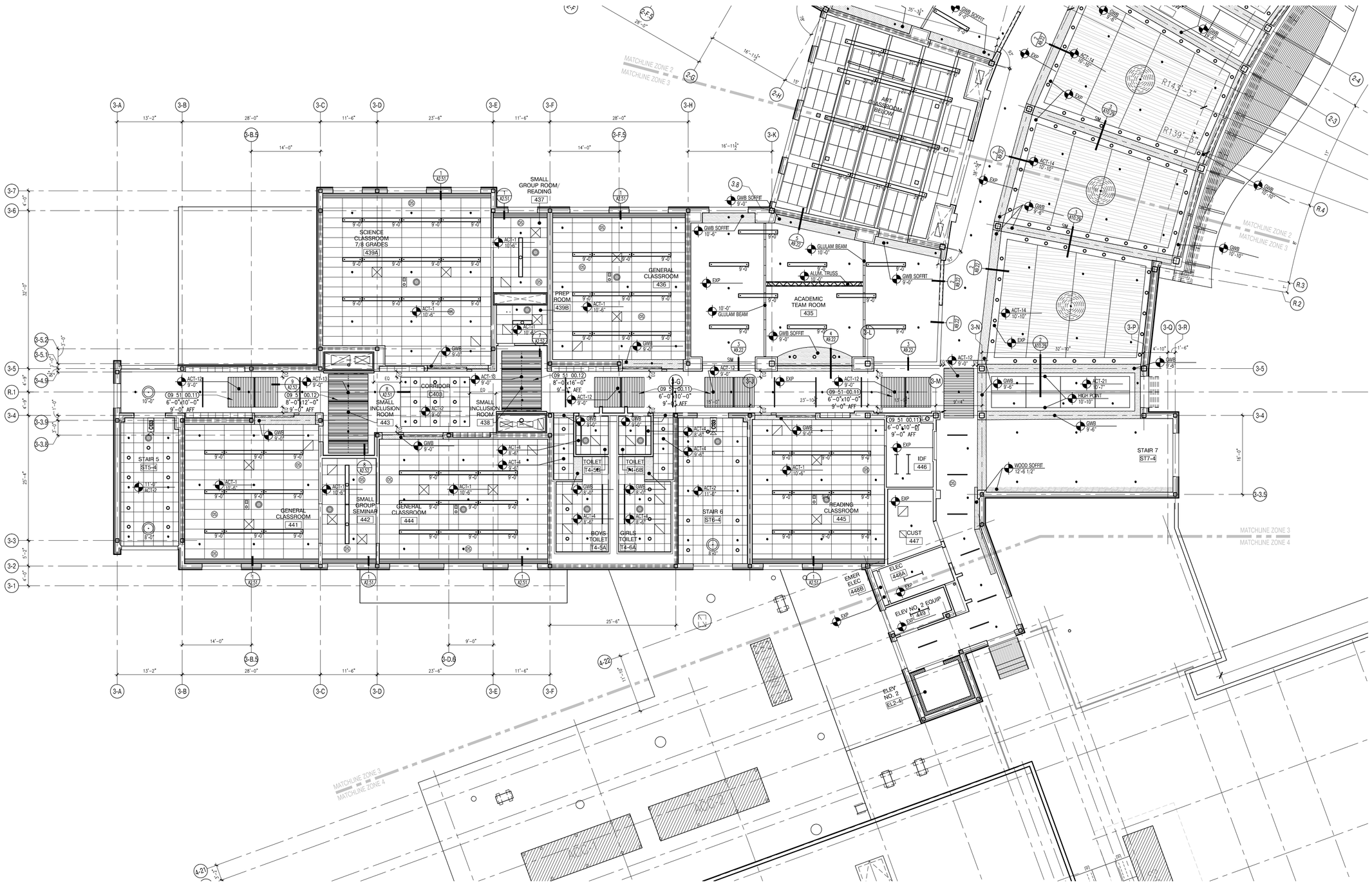

1 FOURTH FLOOR REFLECTED CEILING PLAN
1/8"=1'-0"

526 Boston Post Rd Wayland, MA
508.358.0790 www.ai3architects.com

BEVERLY MIDDLE SCHOOL

CABOT STREET
BEVERLY, MA 01915

REFLECTED CEILING PLAN LEGEND:

- SUPPLY GRILL– SEE MECH.
- RETURN GRILL– SEE MECH.
- GWB SOFFIT
- WOOD VENEER TILE
- OCCUPANCY SENSOR– SEE ELEC.
- DAYLIGHT SENSOR– SEE ELEC.
- ACOUSTIC PANEL– ABSORPTIVE
- ACOUSTIC PANEL– REFLECTIVE
- STAGE LIGHTING– SEE ELEC. AND THEATER
- STRIP LIGHT FIXTURE– SEE ELEC.
- SCONCE LIGHT FIXTURE– SEE ELEC.
- RECESSED LIGHT FIXTURE– SEE ELEC.
- LINEAR PENDANT LIGHT FIXTURE– SEE ELEC. (MOUNTING HEIGHT AS NOTED)
- PENDANT LIGHT FIXTURE– SEE ELEC.
- DOWN LIGHT– SEE ELEC.
- TRACK LIGHTING FIXTURE– SEE ELEC.

GENERAL NOTES:

1. ALL CEILING MOUNTED ITEMS, INCLUDING SPRINKLER HEADS, SMOKE DETECTORS, SPEAKERS, VIDEO, WIRELESS ACCESS POINTS AND RECESSED DOWN LIGHTS, PLACED IN A 2'X4' CEILING TILE ARE TO BE ON CENTERLINE OF 2'–0" DIMENSION AND TO BE AT 1'–0" OFF EITHER END OR IN THE EXACT CENTER OF THE 4'–0" DIMENSION.
2. ALL CEILING MOUNTED ITEMS INCLUDING SPRINKLER HEADS, SMOKE DETECTORS, SPEAKERS, VIDEO, WIRELESS ACCESS POINTS AND RECESSED DOWN LIGHTS PLACED IN A 2'X2' CEILING TILE TO BE CENTERED IN THE EXACT CENTER OF THE TILE.
3. ALL SUPPLY GRILLES, RETURN REGISTERS, SPRINKLER HEADS, SMOKE DETECTORS, LIGHTS, SPEAKERS, VIDEO, WIRELESS ACCESS POINTS AND EXIT SIGNS TO BE LOCATED ON COORDINATION DRAWINGS. FINAL PLACEMENT TO BE APPROVED BY ARCHITECT.
4. DIVISION 078100, 078400, 092123, 092216 AND 092900 REFER TO DRAWINGS G0.1, G0.2, G0.3, G0.4 AND G0.5 FOR ROOMS (AREAS) THAT ARE REQUIRED TO HAVE FIRE RATED CEILING/FLOOR AND WALL ASSEMBLIES.
5. PAINT CONCEALED SPRINKLER HEAD COVERS AT WOOD CEILING TO MATCH WOOD SPECIES.
6. PAINT CONCEALED SPRINKLER HEAD COVERS AT GWB CEILING TO MATCH CEILING PAINT COLOR.
7. ACOUSTICAL CEILING FILED SUB-CONTRACTOR IS TO THOROUGHLY COORDINATE EQUIPMENT, DEVICES, AND SPRINKLER HEADS NOTED ON THE FIRE PROTECTION DRAWINGS, ELECTRICAL DRAWINGS, MECHANICAL DRAWINGS, AND TECHNOLOGY DRAWINGS.
8. DIVISION 070200 TO PROVIDE JOINT SEALANT AT ALL GWB SOFFITS THAT ABUT DIFFERENT MATERIALS.
9. ALL SOFFITS TO ALIGN WITH ADJACENT SURFACE, UNLESS NOTED OTHERWISE.

90% CONSTRUCTION DOCUMENTS

NOT FOR CONSTRUCTION

NORTH ARROW

KEYPLAN

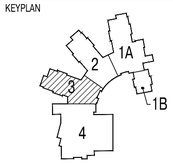

DRAWING NAME:

FOURTH FLOOR REFLECTED CEILING PLAN ZONE 3

DRAWN BY:	JMR/MJR/ETF
REVIEWED BY:	BPH
SCALE:	As Noted
JOB NO.:	1403.00
DATE:	July 25, 2016
DRAWING NUMBER:	A2.43

Copyright © 2016 A13 Architects, LLC

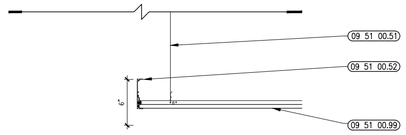

9 SOFFIT DETAIL
1-1/2"=1'-0"

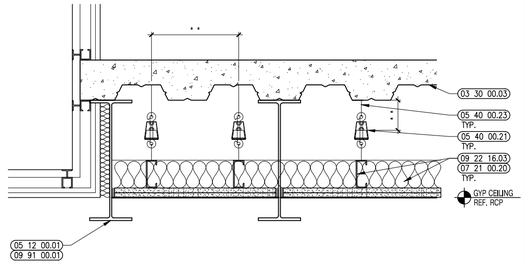

8 SOFFIT DETAIL
1-1/2"=1'-0"

4 SOFFIT DETAIL
1-1/2"=1'-0"

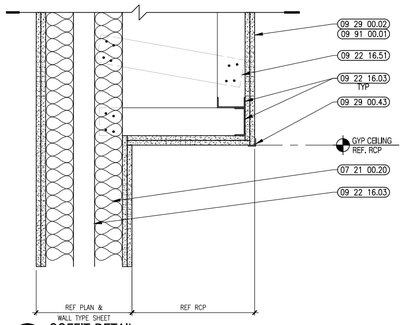

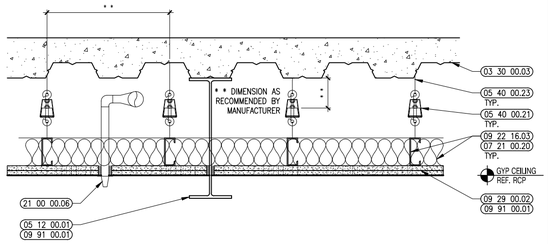

11 SOFFIT DETAIL
1-1/2"=1'-0"

7 SOFFIT DETAIL
1-1/2"=1'-0"

3 SOFFIT DETAIL
1-1/2"=1'-0"

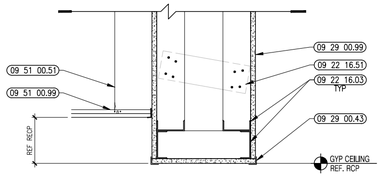

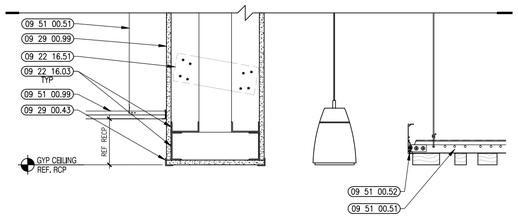

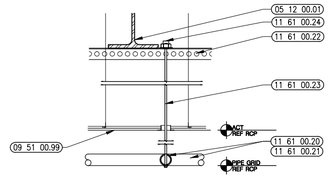

10 SOFFIT DETAIL
1-1/2"=1'-0"

6 SOFFIT DETAIL
1-1/2"=1'-0"

2 SOFFIT DETAIL
1-1/2"=1'-0"

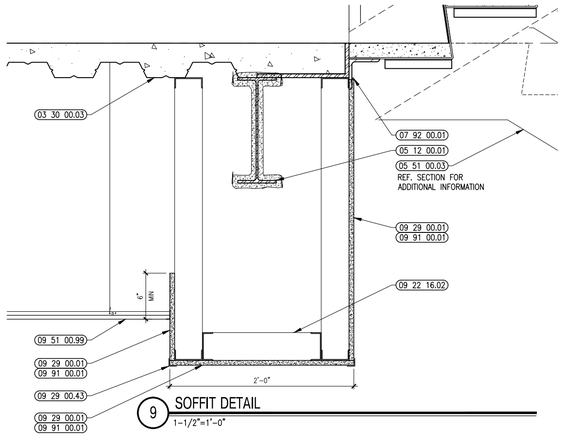

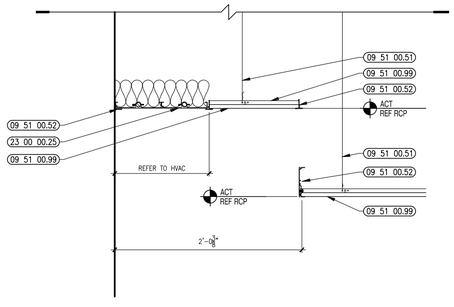

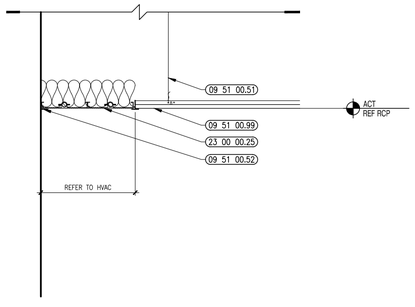

9 SOFFIT DETAIL
1-1/2"=1'-0"

5 SOFFIT DETAIL
1-1/2"=1'-0"

1 SOFFIT DETAIL
1-1/2"=1'-0"

Ai3 architects
526 Boston Post Rd Wayland, MA
508.358.0790 www.ai3architects.com

BEVERLY MIDDLE SCHOOL

CABOT STREET
BEVERLY, MA 01915

REFLECTED CEILING PLAN LEGEND:

SUPPLY GRILL– SEE MECH.
RETURN GRILL– SEE MECH.
GWB SOFFIT
WOOD VENEER TILE
OCCUPANCY SENSOR– SEE ELEC.
DAYLIGHT SENSOR– SEE ELEC.
ACOUSTIC PANEL– ABSORPTIVE
ACOUSTIC PANEL– REFLECTIVE
STAGE LIGHTING– SEE ELEC. AND THEATER
STRIP LIGHT FIXTURE– SEE ELEC.
SCONCE LIGHT FIXTURE– SEE ELEC.
RECESSED LIGHT FIXTURE– SEE ELEC.
LINEAR PENDANT LIGHT FIXTURE– SEE ELEC. (MOUNTING HEIGHT AS NOTED)
PENDANT LIGHT FIXTURE– SEE ELEC.
DOWN LIGHT– SEE ELEC.
TRACK LIGHTING FIXTURE– SEE ELEC.

GENERAL NOTES:

1. ALL CEILING MOUNTED ITEMS, INCLUDING SPRINKLER HEADS, SMOKE DETECTORS, SPEAKERS, VIDEO, WIRELESS ACCESS POINTS AND RECESSED DOWN LIGHTS, PLACED IN A 2'X4' CEILING TILE ARE TO BE ON CENTERLINE OF 2'-0" DIMENSION AND TO BE AT 1'-0" OFF EITHER END OR IN THE EXACT CENTER OF THE 4'-0" DIMENSION.
2. ALL CEILING MOUNTED ITEMS INCLUDING SPRINKLER HEADS, SMOKE DETECTORS, SPEAKERS, VIDEO, WIRELESS ACCESS POINTS AND RECESSED DOWN LIGHTS PLACED IN A 2'X2' CEILING TILE TO BE CENTERED IN THE EXACT CENTER OF THE TILE.
3. ALL SUPPLY GRILLES, RETURN REGISTERS, SPRINKLER HEADS, SMOKE DETECTORS, LIGHTS, SPEAKERS, VIDEO, WIRELESS ACCESS POINTS AND EXIT SIGNS TO BE LOCATED ON COORDINATION DRAWINGS. FINAL PLACEMENT TO BE APPROVED BY ARCHITECT.
4. DIVISION 078100, 078400, 092123, 092216 AND 092900 REFER TO DRAWINGS G0.1, G0.2, G0.3, G0.4 AND G0.5 FOR ROOMS (AREAS) THAT ARE REQUIRED TO HAVE FIRE RATED CEILING/FLOOR AND WALL ASSEMBLIES.
5. PAINT CONCEALED SPRINKLER HEAD COVERS AT WOOD CEILING TO MATCH WOOD SPECIES.
6. PAINT CONCEALED SPRINKLER HEAD COVERS AT GWB CEILING TO MATCH CEILING PAINT COLOR.
7. ACOUSTICAL CEILING FILED SUB-CONTRACTOR IS TO THOROUGHLY COORDINATE EQUIPMENT, DEVICES, AND SPRINKLER HEADS NOTED ON THE FIRE PROTECTION DRAWINGS, ELECTRICAL DRAWINGS, MECHANICAL DRAWINGS, AND TECHNOLOGY DRAWINGS.
8. DIVISION 079200 TO PROVIDE JOINT SEALANT AT ALL GWB SOFFITS THAT ABUT DIFFERENT MATERIALS.
9. ALL SOFFITS TO ALIGN WITH ADJACENT SURFACE, UNLESS NOTED OTHERWISE.

90% CONSTRUCTION DOCUMENTS

NOT FOR CONSTRUCTION

NORTH ARROW

KEYPLAN

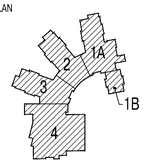

DRAWING NAME:
CEILING SOFFIT DETAILS

DRAWN BY: JMR / ETF
REVIEWED BY: BPH
SCALE: As Noted
JOB NO.: 1403.00
DATE: July 25, 2016
DRAWING NUMBER: A2.51

Copyright © 2016 Ai3 Architects, LLC

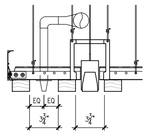

9 WOOD SLATS CEILING SECTION DETAIL
1-1/2" = 1'-0"

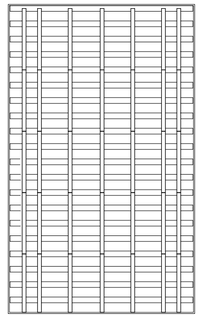

6 CORRIDOR WOOD SLATS CEILING ENLARGED PLAN
1/2" = 1'-0"

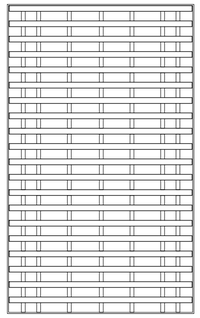

3 CORRIDOR WOOD SLATS CEILING ENLARGED PLAN
1/2" = 1'-0"

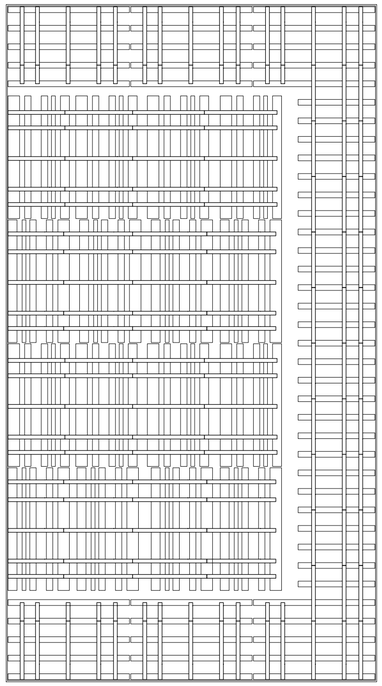

10 ADMIN WOOD SLATS CEILING ENLARGED PLAN
1/2" = 1'-0"

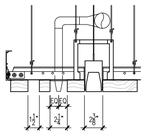

8 WOOD SLATS CEILING SECTION DETAIL
1-1/2" = 1'-0"

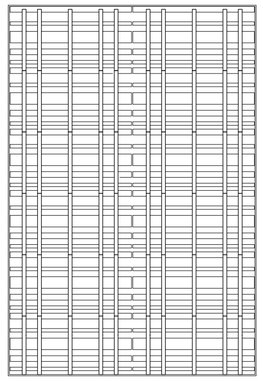

5 CORRIDOR WOOD SLATS CEILING ENLARGED PLAN
1/2" = 1'-0"

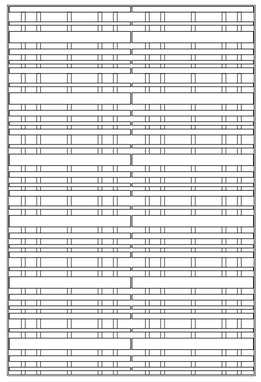

2 CORRIDOR WOOD SLATS CEILING ENLARGED PLAN
1/2" = 1'-0"

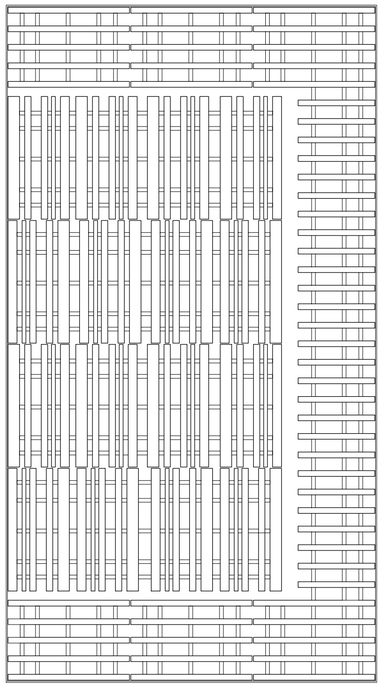

1 ADMIN WOOD SLATS CEILING ENLARGED PLAN
1/2" = 1'-0"

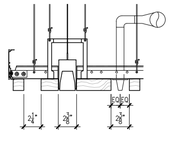

7 WOOD SLATS CEILING SECTION DETAIL
1-1/2" = 1'-0"

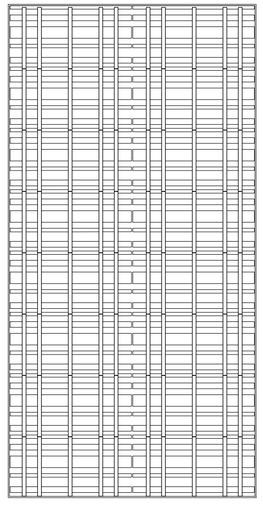

4 CORRIDOR WOOD SLATS CEILING ENLARGED PLAN
1/2" = 1'-0"

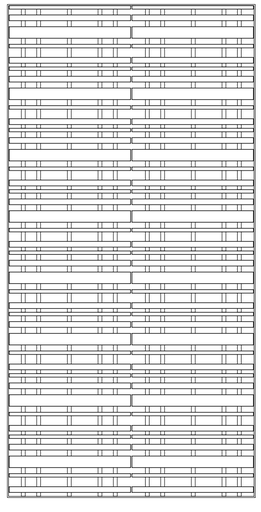

1 CORRIDOR WOOD SLATS CEILING ENLARGED PLAN
1/2" = 1'-0"

A13 architects
526 Boston Post Rd Wayland, MA
508.358.0790 www.a13architects.com

Copyright © 2016 A13 Architects, LLC

BEVERLY MIDDLE SCHOOL

CABOT STREET
BEVERLY, MA 01915

KEYNOTE LEGEND: (REFERENCE SHEETS A0.01 & A0.02 FOR MASTER KEYNOTE LIST AND KEYNOTES NOT LISTED)

90% CONSTRUCTION DOCUMENTS

NOT FOR CONSTRUCTION

NORTH ARROW

KEYPLAN

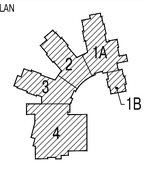

DRAWING NAME:

WOOD SLAT CEILING DETAILS

DRAWN BY: ETF

REVIEWED BY:

SCALE: As Noted
JOB NO.: 1403.00
DATE: July 25, 2016

DRAWING NUMBER: A2.52

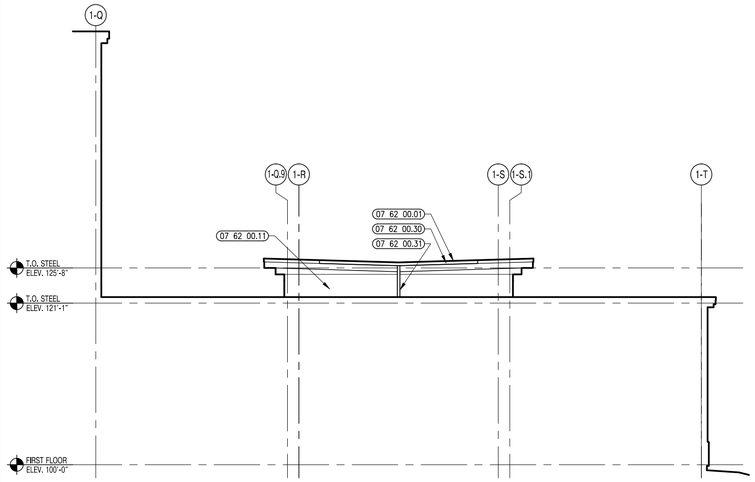

7 ZONE 1B WEST ELEVATION
1/8" = 1'-0"

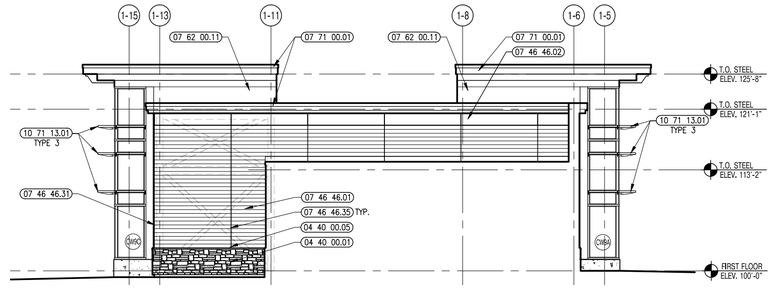

6 ZONE 1A NORTH ELEVATION
1/8" = 1'-0"

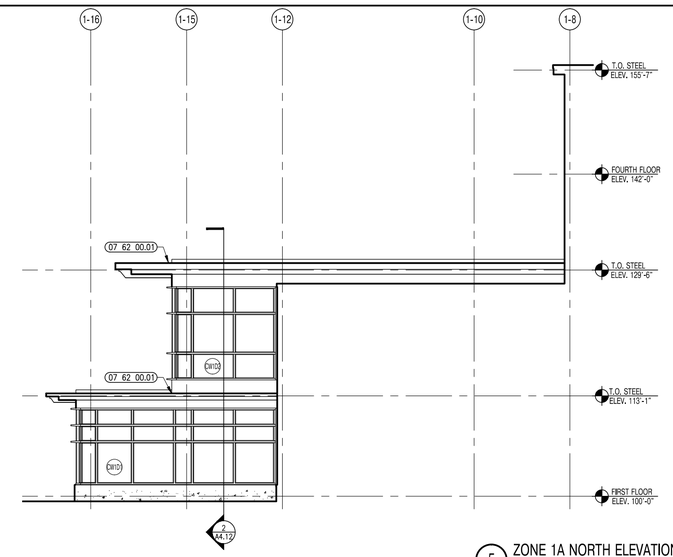

5 ZONE 1A NORTH ELEVATION
1/8" = 1'-0"

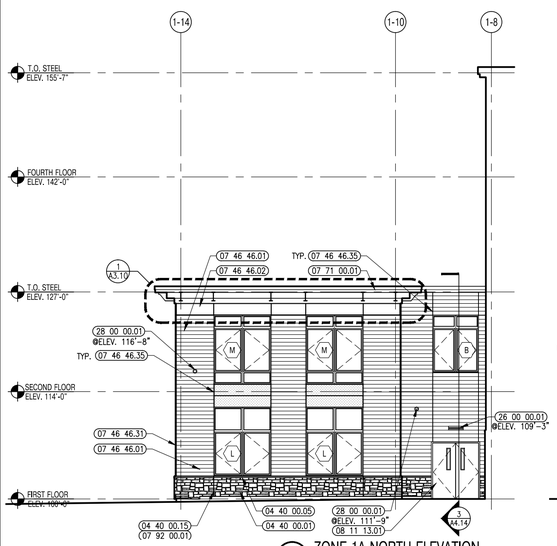

4 ZONE 1A NORTH ELEVATION
1/8" = 1'-0"

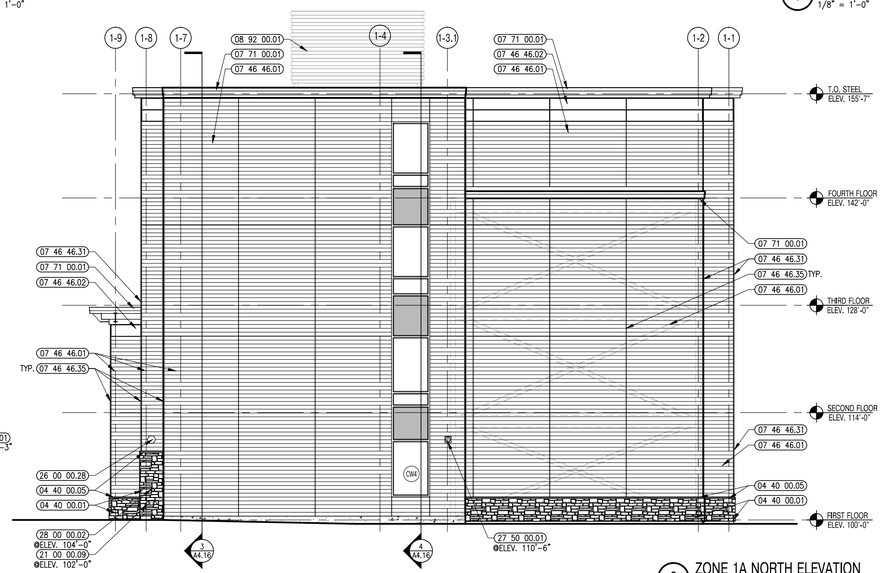

3 ZONE 1A NORTH ELEVATION
1/8" = 1'-0"

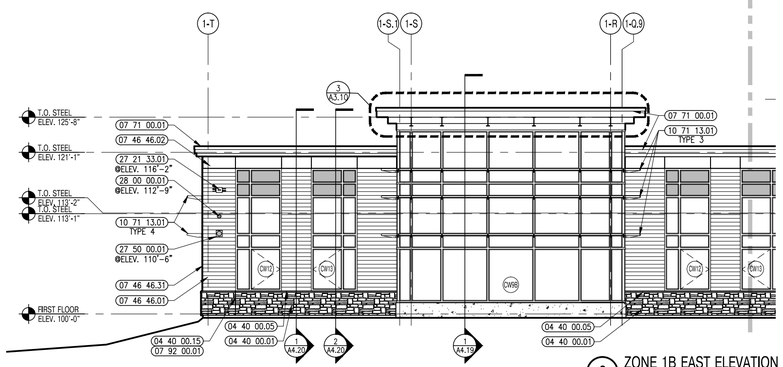

2 ZONE 1B EAST ELEVATION
1/8" = 1'-0"

1 ZONE 1A EAST ELEVATION
1/8" = 1'-0"

A13 architects
526 Boston Post Rd Wayland, MA
508.358.0790 www.a13architects.com

BEVERLY MIDDLE SCHOOL

CABOT STREET
BEVERLY, MA 01915

Copyright © 2016 A13 Architects, LLC

KEYNOTE LEGEND:

(REFERENCE SHEETS A0.01 & A0.02 FOR MASTER KEYNOTE LIST AND KEYNOTES NOT LISTED)

04 40 00.01	STONE VENEER
04 40 00.05	STONE SILL
04 40 00.15	CONTROL JOINT
07 46 46.01	MINERAL FIBER CEMENT SIDING PANEL
07 46 46.02	MINERAL FIBER CEMENT SMOOTH PANEL
07 46 46.31	OPEN OUTSIDE CORNER TRIM
07 46 46.35	BEAD REVEAL TRIM
07 62 00.01	SHEET METAL FLASHING
07 62 00.11	PRE-FINISHED ALUMINUM FLASHING – CUSTOM COLOR
07 62 00.30	GUTTER
07 62 00.31	DOWNSPOUT
07 71 00.01	FACTORY FABRICATED FASCIA TRIM/ROOF EDGE – CUSTOM COLOR
07 92 00.01	JOINT SEALANT – TYPE AS REQUIRED
08 11 13.01	DOOR AND FRAME– SEE DOOR SCHEDULE
08 92 00.01	LOUVERED EQUIPMENT ENCLOSURE
10 71 13.01	ALUMINUM SUNSHADE ASSEMBLY
21 00 00.09	FIRE DEPARTMENT CONNECTION
22 00 00.40	FREEZE PROOF WALL HYDRANT – SEE PLUMBING
26 00 00.01	LIGHT FIXTURE – SEE ELECTRICAL
26 00 00.27	FIRE BEACON – SEE ELECTRICAL
26 00 00.28	FIRE BELL – SEE ELECTRICAL
27 21 33.01	WIRELESS ACCESS POINT – SEE TECHNOLOGY
27 40 00.06	SPEAKER – SEE TECHNOLOGY
27 50 00.01	SPEAKER – SEE TECHNOLOGY
28 00 00.01	CAMERA – SEE TECHNOLOGY
28 00 00.02	CARD READER – SEE TECHNOLOGY

LEGEND

- EXPOSED CONCRETE
- STONE VENEER (04 40 00)
- FIBER CEMENT PANEL TYPE 1 (SIDING) (07 46 46)
- FIBER CEMENT PANEL TYPE 2 (SMOOTH) (07 46 46)
- FIBER CEMENT PANEL TYPE 3 (SMOOTH) (07 46 46)

GENERAL NOTES:

1. COORDINATE EXACT LOCATION OF LIGHTS, SPEAKERS AND CAMERAS WITH ARCHITECT PRIOR TO INSTALLATION.

90% CONSTRUCTION DOCUMENTS

NOT FOR CONSTRUCTION

NORTH ARROW

KEYPLAN

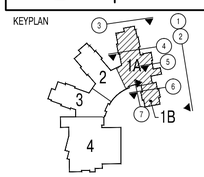

DRAWING NAME:

EXTERIOR ELEVATIONS

DRAWN BY:	RPM
REVIEWED BY:	CLO
SCALE:	As Noted
JOB NO.:	1403.00
DATE:	July 25, 2016
DRAWING NUMBER:	A3.01

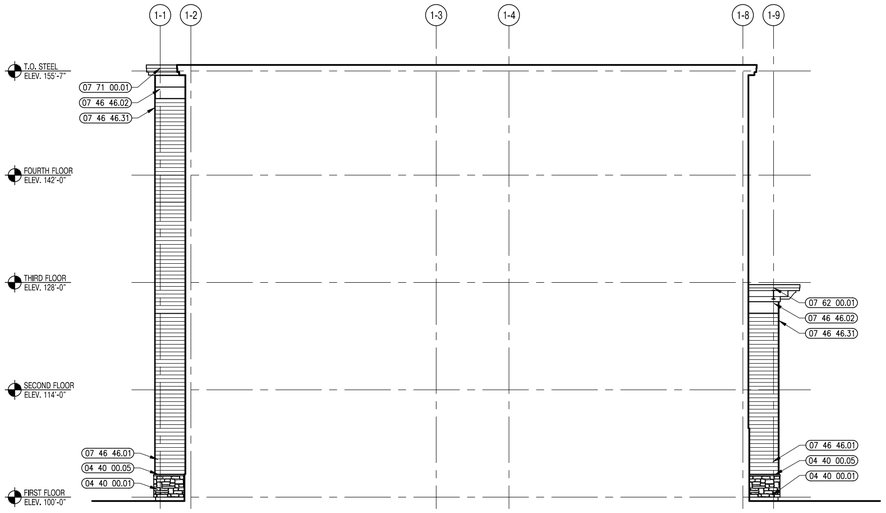

8 ZONE 1B SOUTH ELEVATION
1/8" = 1'-0"

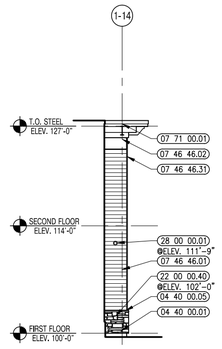

7 ZONE 1B SOUTH ELEVATION
1/8" = 1'-0"

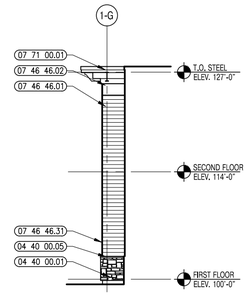

6 ZONE 1B WEST ELEVATION
1/8" = 1'-0"

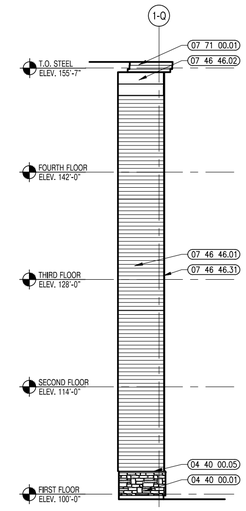

5 ZONE 1A WEST ELEVATION
1/8" = 1'-0"

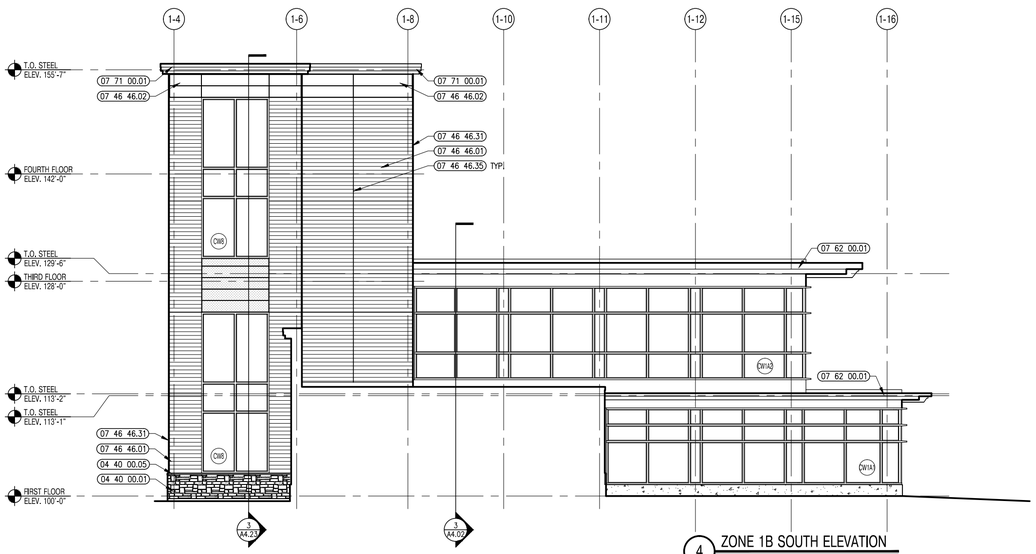

4 ZONE 1B SOUTH ELEVATION
1/8" = 1'-0"

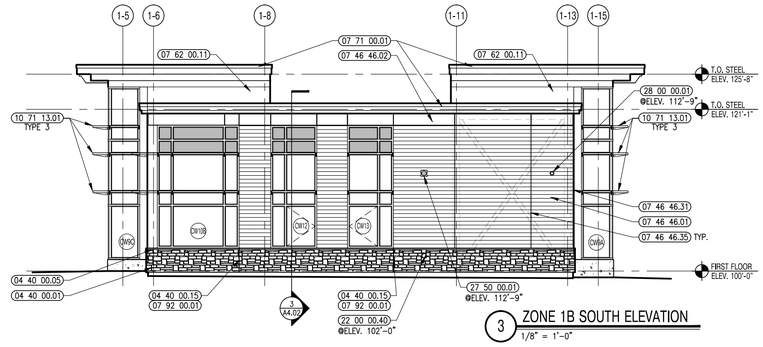

3 ZONE 1B SOUTH ELEVATION
1/8" = 1'-0"

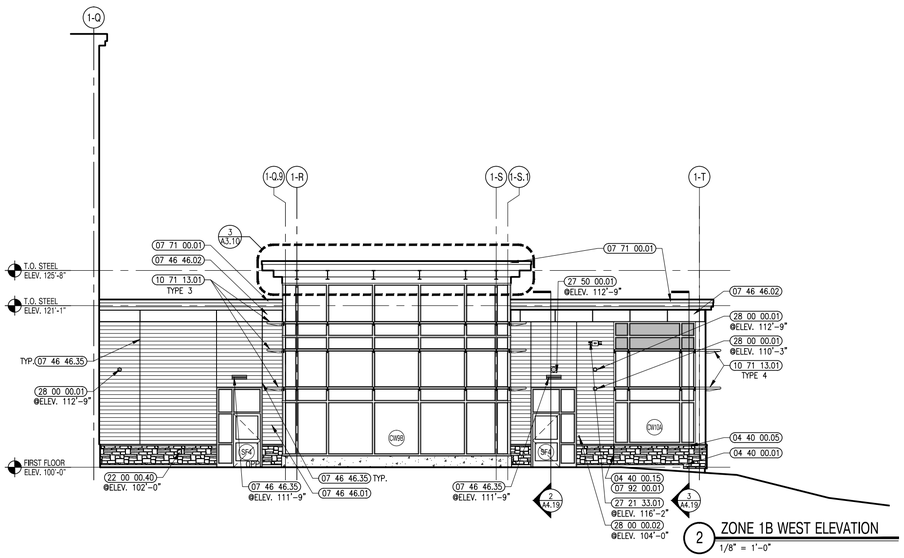

2 ZONE 1B WEST ELEVATION
1/8" = 1'-0"

1 ZONE 1A WEST ELEVATION
1/8" = 1'-0"

A13 architects
526 Boston Post Rd Wayland, MA
508.358.0790 www.a13architects.com

BEVERLY MIDDLE SCHOOL

CABOT STREET
BEVERLY, MA 01915

Copyright © 2016 A13 Architects, LLC

KEYNOTE LEGEND: (REFERENCE SHEETS A0.01 & A0.02 FOR MASTER KEYNOTE LIST AND KEYNOTES NOT LISTED)

04 40 00.01	STONE VENEER
04 40 00.05	STONE SILL
04 40 00.15	CONTROL JOINT
07 46 46.01	MINERAL FIBER CEMENT SIDING PANEL
07 46 46.02	MINERAL FIBER CEMENT SMOOTH PANEL
07 46 46.31	OPEN OUTSIDE CORNER TRIM
07 46 46.35	BEAD REVEAL TRIM
07 62 00.01	STONE SILL
07 71 00.01	FACTORY FABRICATED FASCIA TRIM/ROOF EDGE – CUSTOM COLOR
07 92 00.01	JOINT SEALANT – TYPE AS REQUIRED
10 71 13.01	ALUMINUM SUNSHADE ASSEMBLY
22 00 00.01	SPEAKER – SEE TECHOLOGY
22 00 00.40	FREEZE PROOF WALL HYDRANT – SEE PLUMBING
26 00 00.13	EXTERIOR LIGHT FIXTURE – SEE ELECTRICAL
27 21 33.01	SPEAKER – SEE TECHOLOGY
27 50 00.01	SINK – SEE PLUMBING
28 00 00.01	SHEET METAL FLASHING

LEGEND

- EXPOSED CONCRETE
- STONE VENEER (04 40 00)
- FIBER CEMENT PANEL TYPE 1 (SIDING) (07 46 46)
- FIBER CEMENT PANEL TYPE 2 (SMOOTH) (07 46 46)
- FIBER CEMENT PANEL TYPE 3 (SMOOTH) (07 46 46)

GENERAL NOTES:

1. COORDINATE EXACT LOCATION OF LIGHTS, SPEAKERS AND CAMERAS WITH ARCHITECT PRIOR TO INSTALLATION.

90% CONSTRUCTION DOCUMENTS

NOT FOR CONSTRUCTION

NORTH ARROW

KEYPLAN

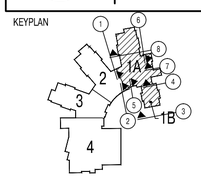

DRAWING NAME:

EXTERIOR ELEVATIONS

DRAWN BY:	RPM
REVIEWED BY:	CLO
SCALE:	As Noted
JOB NO.:	1403.00
DATE:	July 25, 2016
DRAWING NUMBER:	A3.02

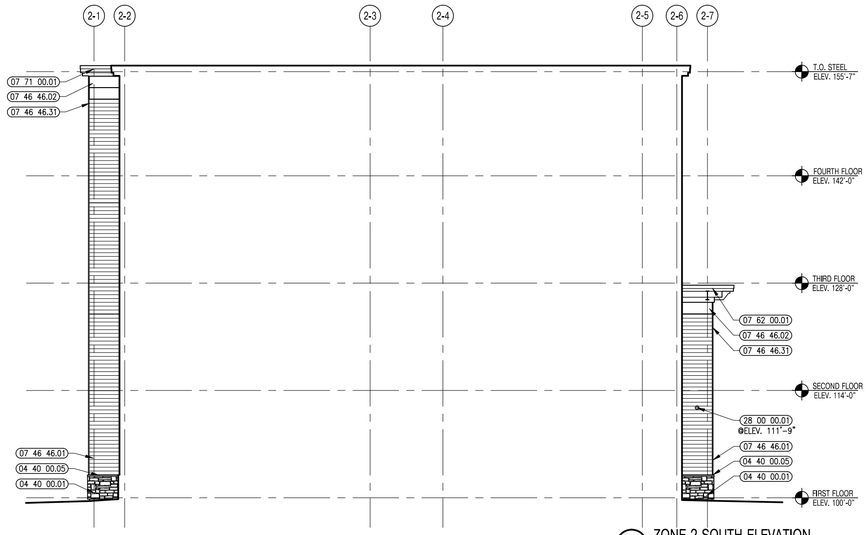

5 ZONE 2 SOUTH ELEVATION
1/8" = 1'-0"

4 ZONE 2 WEST ELEVATION
1/8" = 1'-0"

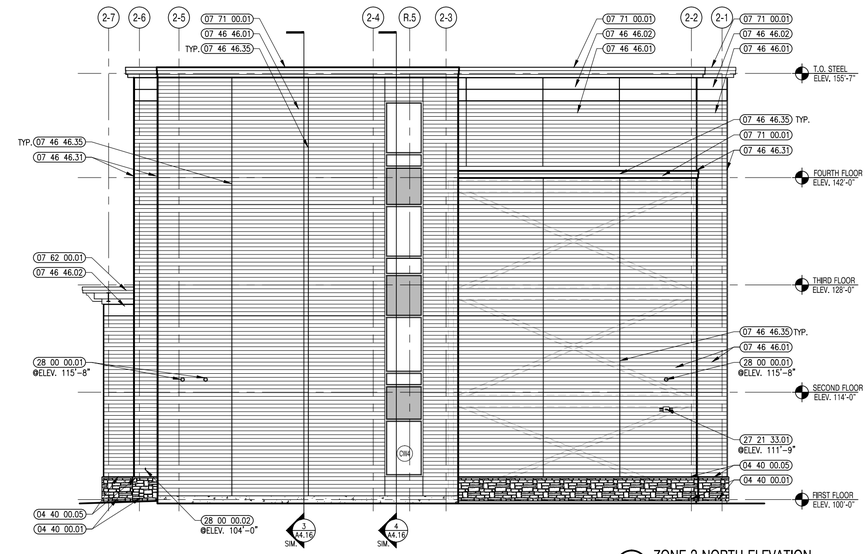

3 ZONE 2 NORTH ELEVATION
1/8" = 1'-0"

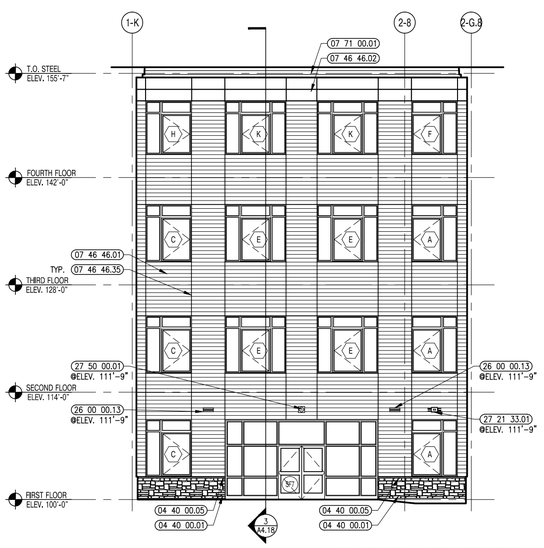

2 ZONE 2 NORTH ELEVATION
1/8" = 1'-0"

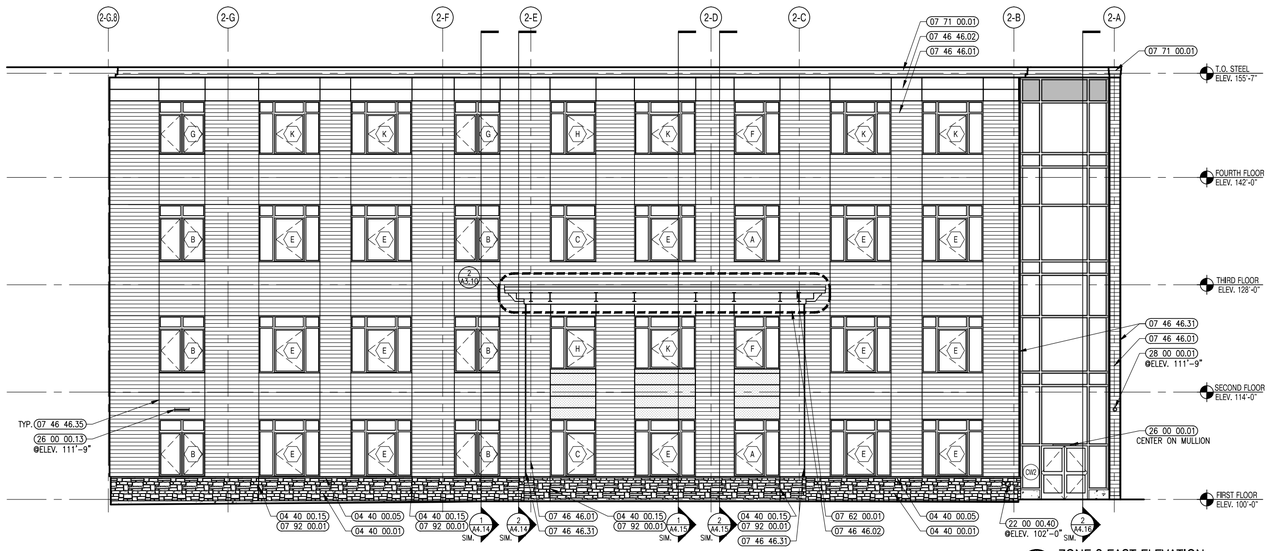

1 ZONE 2 EAST ELEVATION
1/8" = 1'-0"

526 Boston Post Rd Wayland, MA
508.358.0790 www.ai3architects.com

BEVERLY MIDDLE SCHOOL

CABOT STREET
BEVERLY, MA 01915

Copyright © 2016 A13 Architects, LLC

KEYNOTE LEGEND: (REFERENCE SHEETS A0.01 & A0.02 FOR MASTER KEYNOTE LIST AND KEYNOTES NOT LISTED)

04 40 00.01	STONE VENEER
04 40 00.05	STONE SILL
04 40 00.15	CONTROL JOINT
07 46 46.01	MINERAL FIBER CEMENT SIDING PANEL
07 46 46.02	MINERAL FIBER CEMENT SMOOTH PANEL
07 46 46.31	OPEN OUTSIDE CORNER TRIM
07 46 46.35	BEAD REVEAL TRIM
07 62 00.01	CAMERA – SEE TECHNOLOGY
07 71 00.01	FACTORY FABRICATED FASCIA TRIM/ROOF EDGE – CUSTOM COLOR
07 92 00.01	JOINT SEALANT – TYPE AS REQUIRED
22 00 00.40	FREEZE PROOF WALL HYDRANT – SEE PLUMBING
26 00 00.01	LIGHT FIXTURE – SEE ELECTRICAL
26 00 00.13	EXTERIOR LIGHT FIXTURE – SEE ELECTRICAL
27 21 33.01	WIRELESS ACCESS POINT – SEE TECHNOLOGY
27 50 00.01	SPEAKER – SEE TECHOLOGY
28 00 00.01	SHEET METAL FLASHING
28 00 00.02	CARD READER – SEE TECHNOLOGY

LEGEND

- EXPOSED CONCRETE
- STONE VENEER (04 40 00)
- FIBER CEMENT PANEL TYPE 1 (SIDING) (07 46 46)
- FIBER CEMENT PANEL TYPE 2 (SMOOTH) (07 46 46)
- FIBER CEMENT PANEL TYPE 3 (SMOOTH) (07 46 46)

GENERAL NOTES:

1. COORDINATE EXACT LOCATION OF LIGHTS, SPEAKERS AND CAMERAS WITH ARCHITECT PRIOR TO INSTALLATION.

90% CONSTRUCTION DOCUMENTS

NOT FOR CONSTRUCTION

NORTH ARROW

KEYPLAN

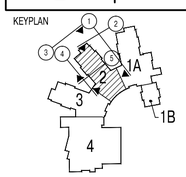

DRAWING NAME:

EXTERIOR ELEVATIONS

DRAWN BY: RPM
REVIEWED BY: CLO
SCALE: As Noted
JOB NO.: 1403.00
DATE: July 25, 2016
DRAWING NUMBER: A3.03

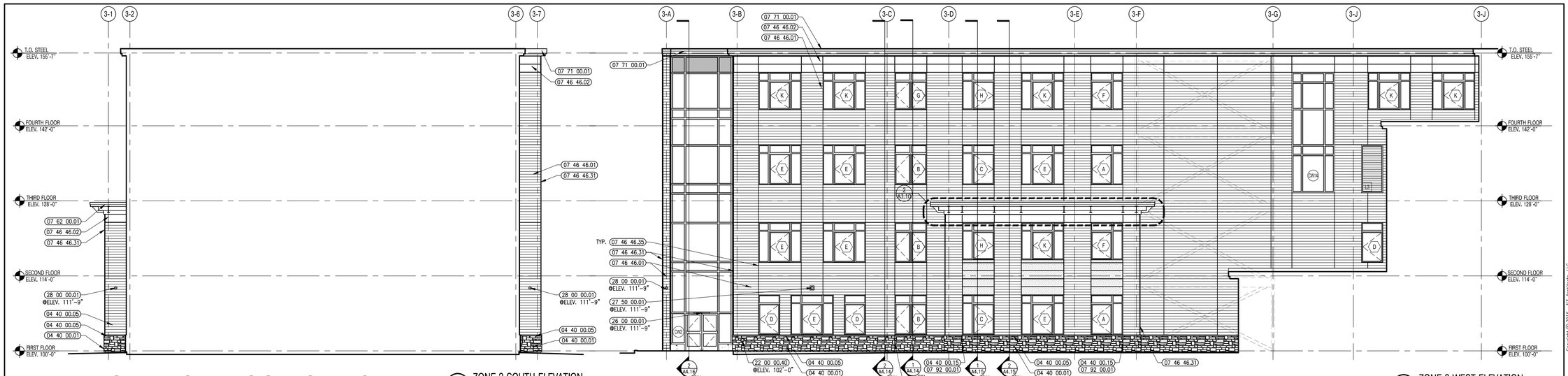

6 ZONE 3 SOUTH ELEVATION
1/8" = 1'-0"

5 ZONE 3 WEST ELEVATION
1/8" = 1'-0"

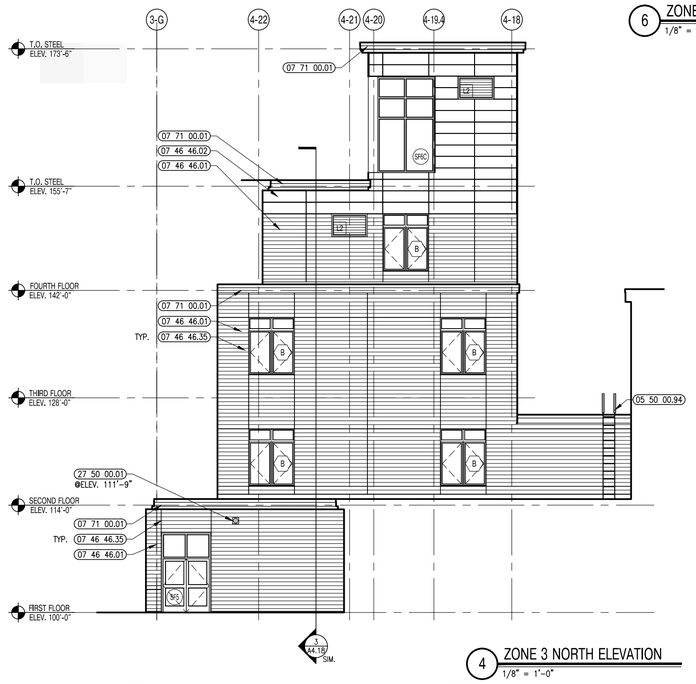

4 ZONE 3 NORTH ELEVATION
1/8" = 1'-0"

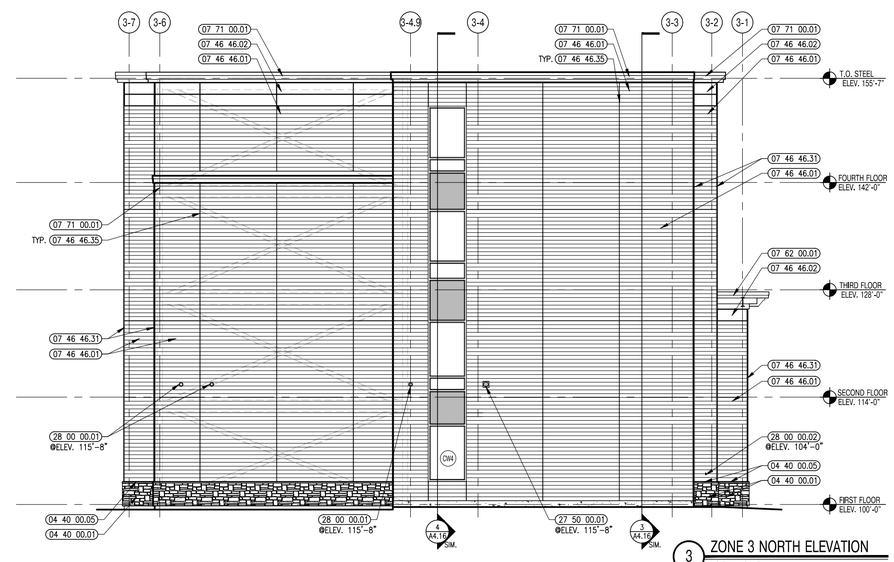

3 ZONE 3 NORTH ELEVATION
1/8" = 1'-0"

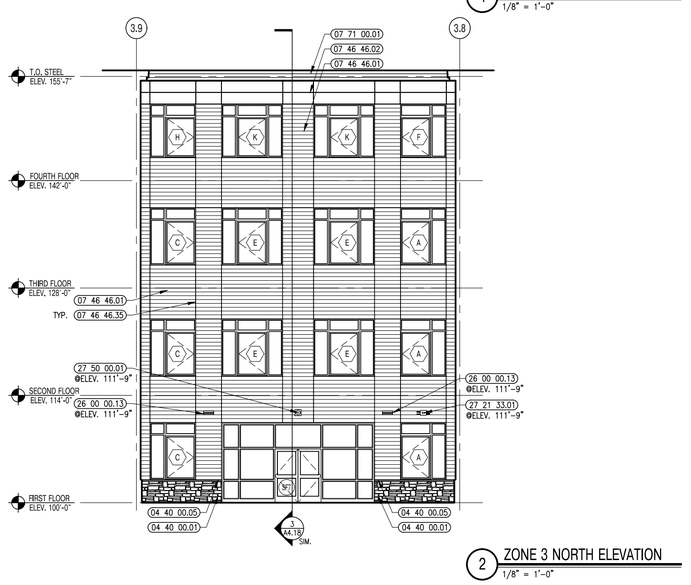

2 ZONE 3 NORTH ELEVATION
1/8" = 1'-0"

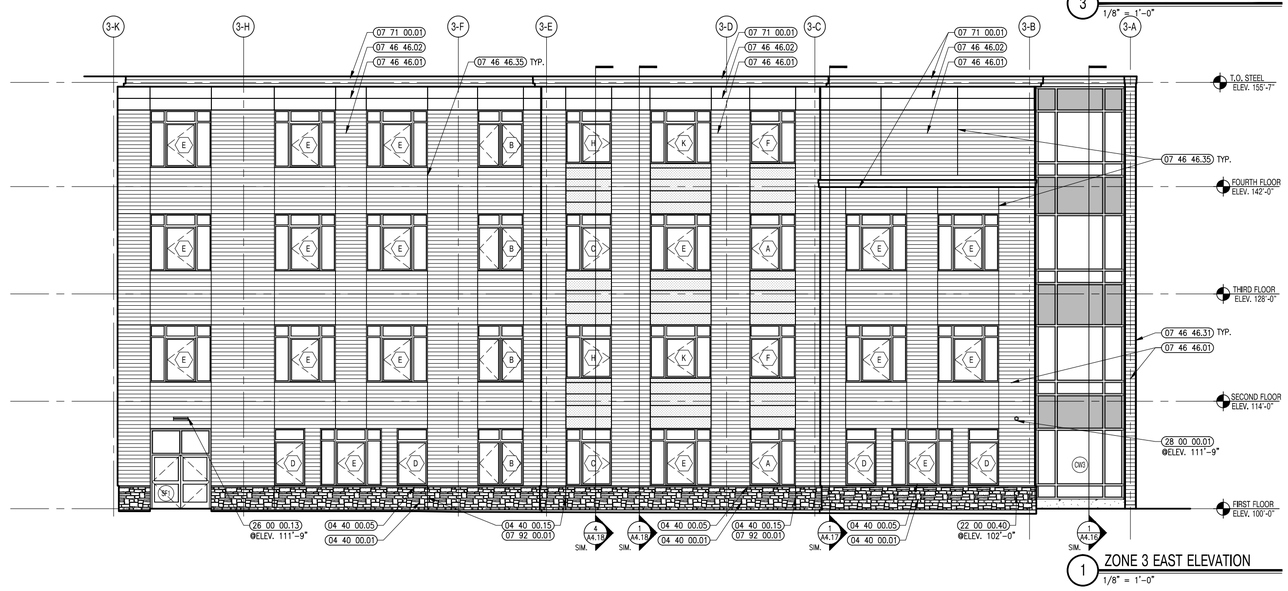

1 ZONE 3 EAST ELEVATION
1/8" = 1'-0"

A13 architects
526 Boston Post Rd Wayland, MA
508.358.0790 www.a13architects.com

BEVERLY MIDDLE SCHOOL

CABOT STREET
BEVERLY, MA 01915

Copyright © 2016 A13 Architects, LLC

KEYNOTE LEGEND:

(REFERENCE SHEETS A0.01 & A0.02 FOR MASTER KEYNOTE LIST AND KEYNOTES NOT LISTED)

04 40 00.01	STONE VENEER
04 40 00.05	STONE SILL
04 40 00.15	CONTROL JOINT
05 50 00.94	ROOF ACCESS LADDER – EXTERIOR
07 46 46.01	MINERAL FIBER CEMENT SIDING PANEL
07 46 46.02	MINERAL FIBER CEMENT SMOOTH PANEL
07 46 46.31	OPEN OUTSIDE CORNER TRIM
07 46 46.35	BEAD REVEAL TRIM
07 62 00.01	CARD READER – SEE TECHNOLOGY
07 71 00.01	FACTORY FABRICATED FASCIA TRIM/ROOF EDGE – CUSTOM COLOR
07 92 00.01	JOINT SEALANT – TYPE AS REQUIRED
22 00 00.40	FREEZE PROOF WALL HYDRANT – SEE PLUMBING
26 00 00.01	LIGHT FIXTURE – SEE ELECTRICAL
26 00 00.13	EXTERIOR LIGHT FIXTURE – SEE ELECTRICAL
27 21 33.01	WIRELESS ACCESS POINT – SEE TECHNOLOGY
27 50 00.01	EXTERIOR LIGHT FIXTURE – SEE ELECTRICAL
28 00 00.01	CAMERA – SEE TECHNOLOGY
28 00 00.02	CARD READER – SEE TECHNOLOGY

LEGEND

- EXPOSED CONCRETE
- STONE VENEER (04 40 00)
- FIBER CEMENT PANEL TYPE 1 (SIDING) (07 46 46)
- FIBER CEMENT PANEL TYPE 2 (SMOOTH) (07 46 46)
- FIBER CEMENT PANEL TYPE 3 (SMOOTH) (07 46 46)

GENERAL NOTES:

1. COORDINATE EXACT LOCATION OF LIGHTS, SPEAKERS AND CAMERAS WITH ARCHITECT PRIOR TO INSTALLATION.

90% CONSTRUCTION DOCUMENTS

NOT FOR CONSTRUCTION

NORTH ARROW

KEYPLAN

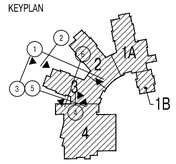

DRAWING NAME:

EXTERIOR ELEVATIONS

DRAWN BY:	RPM
REVIEWED BY:	CLO
SCALE:	As Noted
JOB NO.:	1403.00
DATE:	July 25, 2016
DRAWING NUMBER:	A3.04

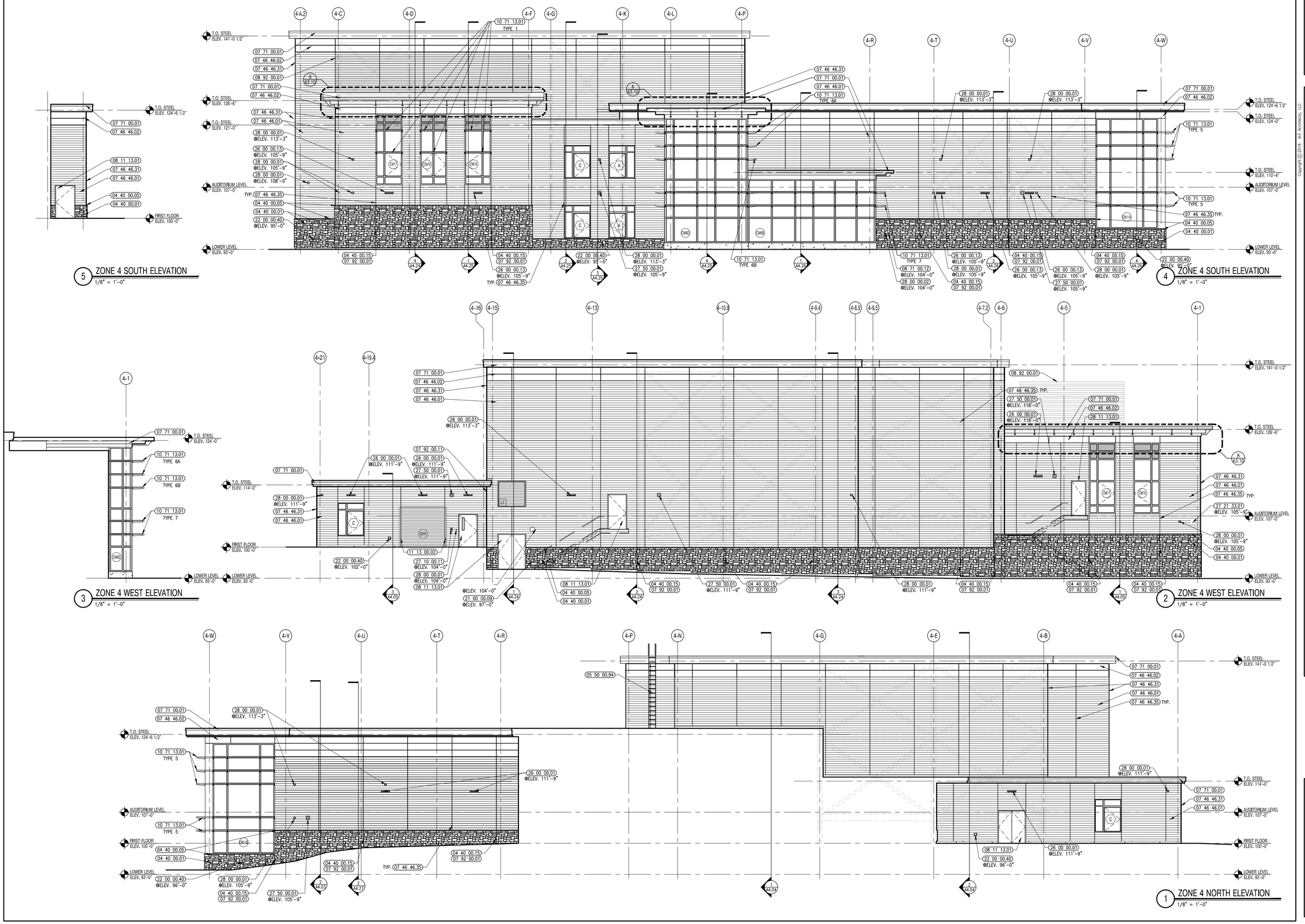

526 Boston Post Rd Wayland, MA
508.358.0790 www.ai3architects.com

BEVERLY MIDDLE SCHOOL

CABOT STREET
BEVERLY, MA 01915

Copyright © 2016 A13 Architects, LLC

KEYNOTE LEGEND:

(REFERENCE SHEETS A0.01 & A0.02 FOR MASTER KEYNOTE LIST AND KEYNOTES NOT LISTED)

04 40 00.01	STONE VENEER
04 40 00.05	STONE SILL
04 40 00.15	CONTROL JOINT
05 50 00.94	ROOF ACCESS LADDER – EXTERIOR
07 46 46.01	MINERAL FIBER CEMENT SIDING PANEL
07 46 46.02	MINERAL FIBER CEMENT SMOOTH PANEL
07 46 46.31	OPEN OUTSIDE CORNER TRIM
07 46 46.35	BEAD REVEAL TRIM
07 71 00.01	FACTORY FABRICATED FASCIA TRIM/ROOF EDGE – CUSTOM COLOR
07 92 00.01	JOINT SEALANT – TYPE AS REQUIRED
07 92 00.11	EXTERIOR EXPANSION JOINT – 2 INCH
08 11 13.01	DOOR AND FRAME– SEE DOOR SCHEDULE
08 71 00.12	DOOR SWITCH
08 92 00.01	LOUVERED EQUIPMENT ENCLOSURE
10 71 13.01	ALUMINUM SUNSHADE ASSEMBLY
11 13 00.02	RUBBER CORNER GUARD
21 00 00.09	FIRE DEPARTMENT CONNECTION
22 00 00.40	FREEZE PROOF WALL HYDRANT – SEE PLUMBING
26 00 00.01	LIGHT FIXTURE – SEE ELECTRICAL
26 00 00.13	EXTERIOR LIGHT FIXTURE – SEE ELECTRICAL
27 10 00.11	TELEPHONE JACK – SEE TECHNOLOGY – TELEPHONE DEVICE TO BE OWNER FURNISHED AND INSTALLED
27 21 33.01	WIRELESS ACCESS POINT – SEE TECHNOLOGY
27 50 00.01	SPEAKER – SEE TECHOLOGY
28 00 00.01	CAMERA – SEE TECHNOLOGY
28 00 00.02	CARD READER – SEE TECHNOLOGY

LEGEND

- EXPOSED CONCRETE
- STONE VENEER (04 40 00)
- FIBER CEMENT PANEL TYPE 1 (SIDING) (07 46 46)
- FIBER CEMENT PANEL TYPE 2 (SMOOTH) (07 46 46)
- FIBER CEMENT PANEL TYPE 3 (SMOOTH) (07 46 46)

GENERAL NOTES:

1. COORDINATE EXACT LOCATION OF LIGHTS, SPEAKERS AND CAMERAS WITH ARCHITECT PRIOR TO INSTALLATION.

90% CONSTRUCTION DOCUMENTS

NOT FOR CONSTRUCTION

NORTH ARROW

KEYPLAN

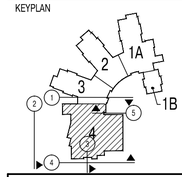

DRAWING NAME:

EXTERIOR ELEVATIONS

DRAWN BY:	RPM
REVIEWED BY:	CLO
SCALE:	As Noted
JOB NO.:	1403.00
DATE:	July 25, 2016
DRAWING NUMBER:	A3.05

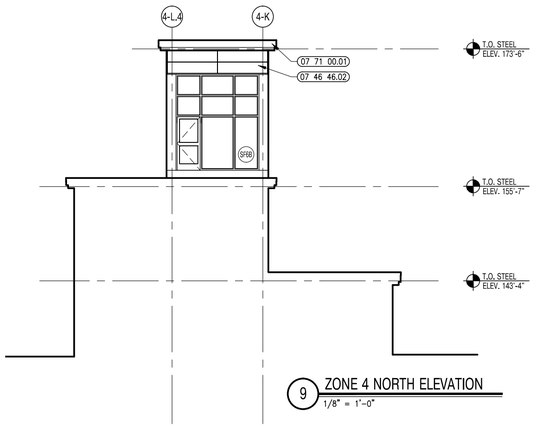

9 ZONE 4 NORTH ELEVATION
1/8" = 1'-0"

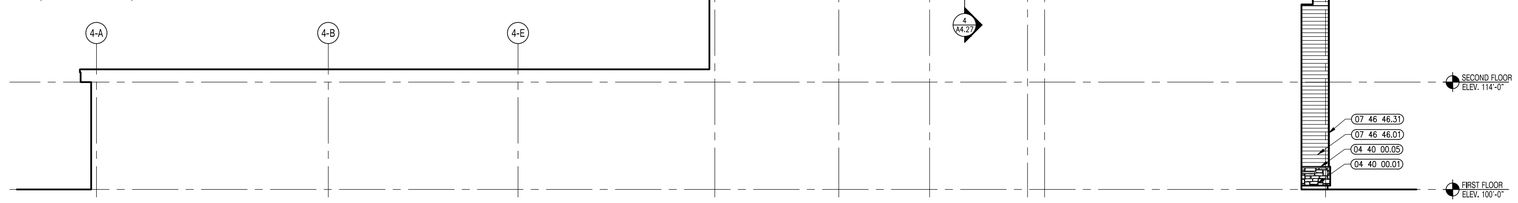

8 ZONE 4 SOUTH ELEVATION
1/8" = 1'-0"

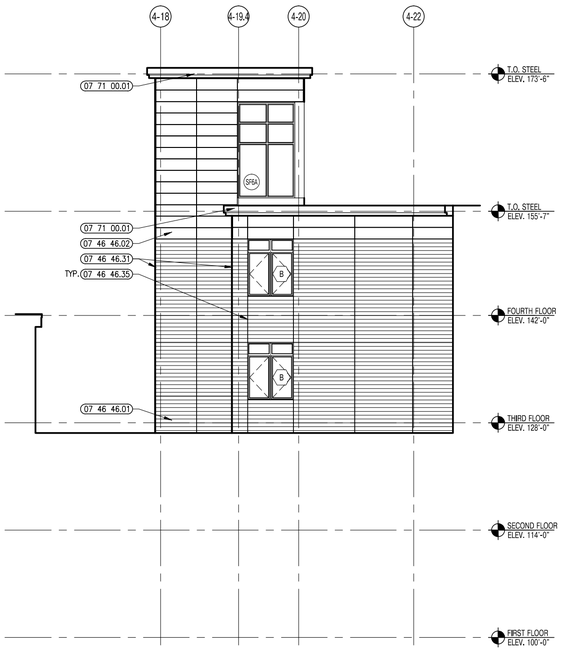

7 ZONE 4 EAST ELEVATION
1/8" = 1'-0"

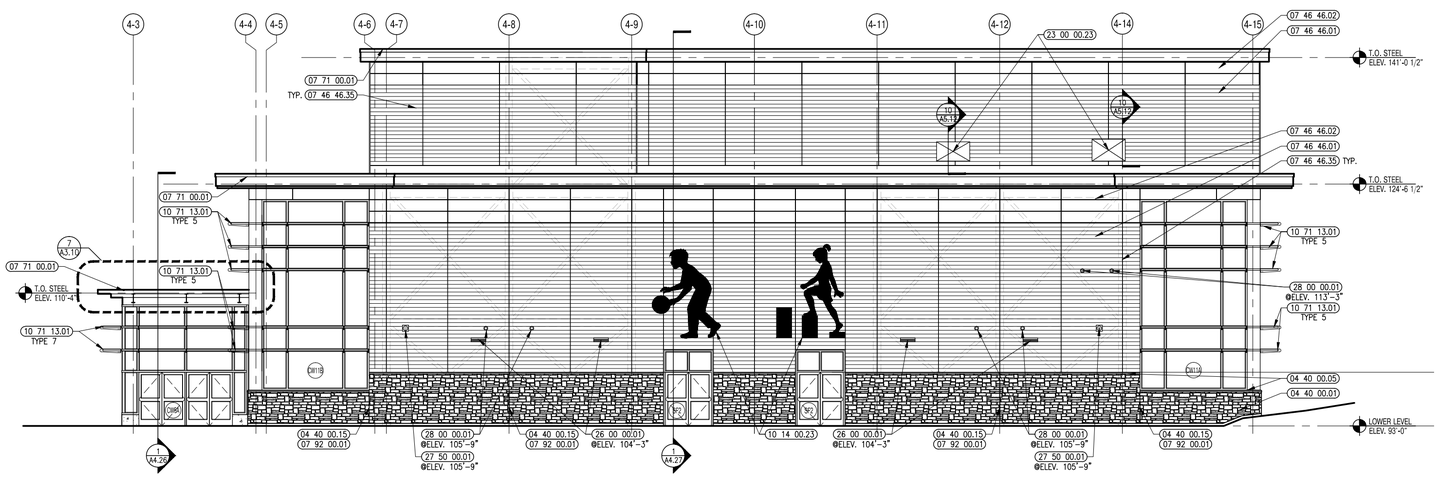

6 ZONE 4 EAST ELEVATION
1/8" = 1'-0"

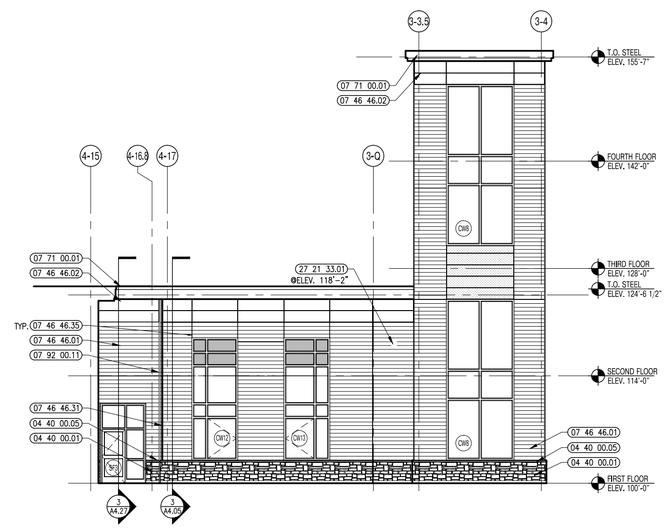

5 ZONE 4 EAST ELEVATION
1/8" = 1'-0"

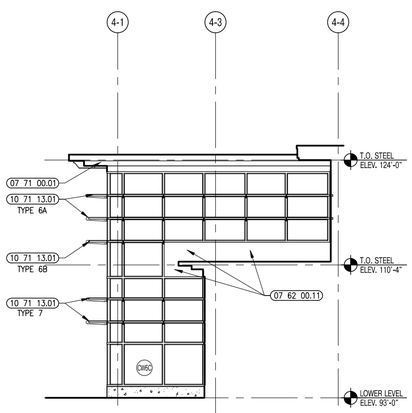

4 ZONE 4 EAST ELEVATION
1/8" = 1'-0"

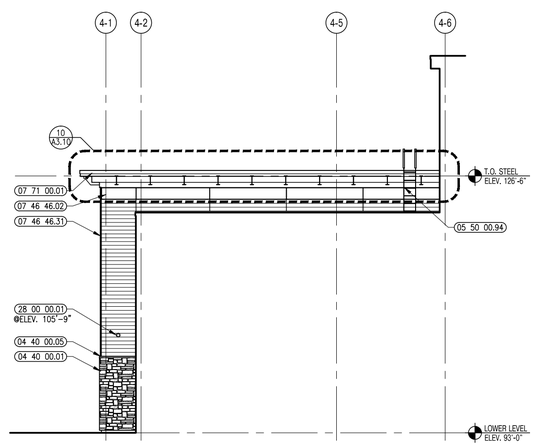

3 ZONE 4 EAST ELEVATION
1/8" = 1'-0"

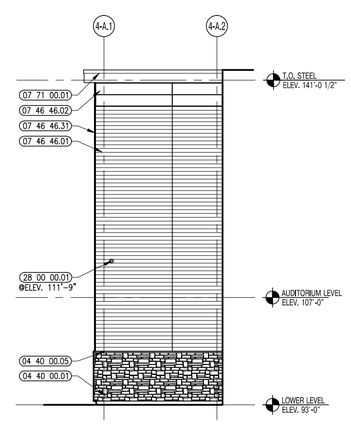

2 ZONE 4 SOUTH ELEVATION
1/8" = 1'-0"

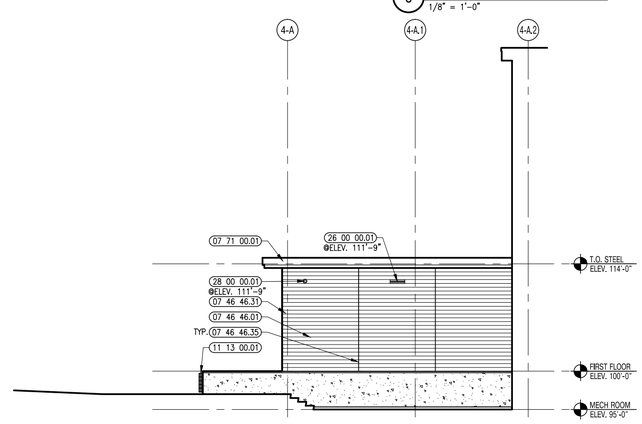

1 ZONE 4 SOUTH ELEVATION
1/8" = 1'-0"

A13 architects
526 Boston Post Rd Wayland, MA
508.358.0790 www.a13architects.com

BEVERLY MIDDLE SCHOOL

CABOT STREET
BEVERLY, MA 01915

Copyright © 2016 A13 Architects, LLC

KEYNOTE LEGEND: (REFERENCE SHEETS A0.01 & A0.02 FOR MASTER KEYNOTE LIST AND KEYNOTES NOT LISTED)

04 40 00.01	STONE VENEER
04 40 00.05	STONE SILL
04 40 00.15	CONTROL JOINT
07 46 46.01	MINERAL FIBER CEMENT SIDING PANEL
07 46 46.02	MINERAL FIBER CEMENT SMOOTH PANEL
07 46 46.31	OPEN OUTSIDE CORNER TRIM
07 46 46.35	BEAD REVEAL TRIM
07 71 00.01	FACTORY FABRICATED FASCIA TRIM/ROOF EDGE – CUSTOM COLOR
07 92 00.01	CONTROL JOINT
07 92 00.11	EXTERIOR EXPANSION JOINT – 2 INCH
10 14 00.23	EXTERIOR SIGNAGE – TYPE AS SCHEDULED
10 71 13.01	ALUMINUM SUNSHADE ASSEMBLY
11 13 00.01	DOCK BUMPERS
23 00 00.23	DUCT – SEE HVAC
27 50 00.01	SPEAKER – SEE TECHOLOGY
28 00 00.01	CAMERA – SEE TECHNOLOGY

LEGEND

- EXPOSED CONCRETE
- STONE VENEER (04 40 00)
- FIBER CEMENT PANEL TYPE 1 (SIDING) (07 46 46)
- FIBER CEMENT PANEL TYPE 2 (SMOOTH) (07 46 46)
- FIBER CEMENT PANEL TYPE 3 (SMOOTH) (07 46 46)

GENERAL NOTES:

1. COORDINATE EXACT LOCATION OF LIGHTS, SPEAKERS AND CAMERAS WITH ARCHITECT PRIOR TO INSTALLATION.

90% CONSTRUCTION DOCUMENTS

NOT FOR CONSTRUCTION

NORTH ARROW

KEYPLAN

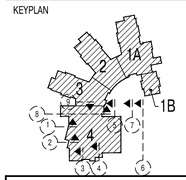

DRAWING NAME:

EXTERIOR ELEVATIONS

DRAWN BY: RPM
REVIEWED BY: CLO
SCALE: As Noted
JOB NO.: 1403.00
DATE: July 25, 2016
DRAWING NUMBER: A3.06

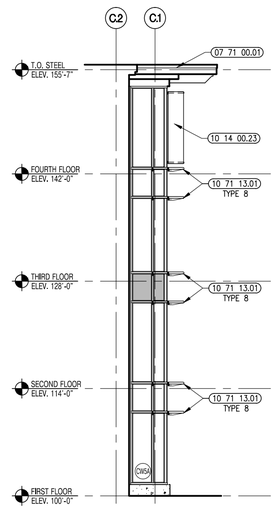

5 CORE ZONE NORTH ELEVATION
1/8" = 1'-0"

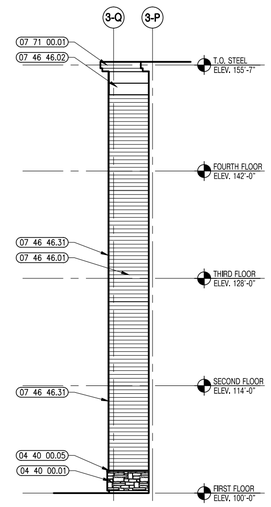

4 CORE ZONE NORTH ELEVATION
1/8" = 1'-0"

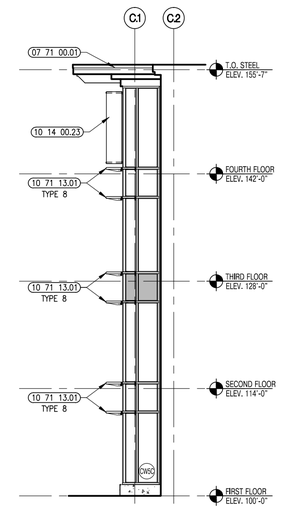

3 CORE ZONE NORTH ELEVATION
1/8" = 1'-0"

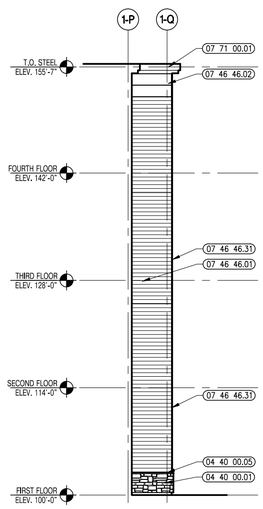

2 CORE ZONE WEST ELEVATION
1/8" = 1'-0"

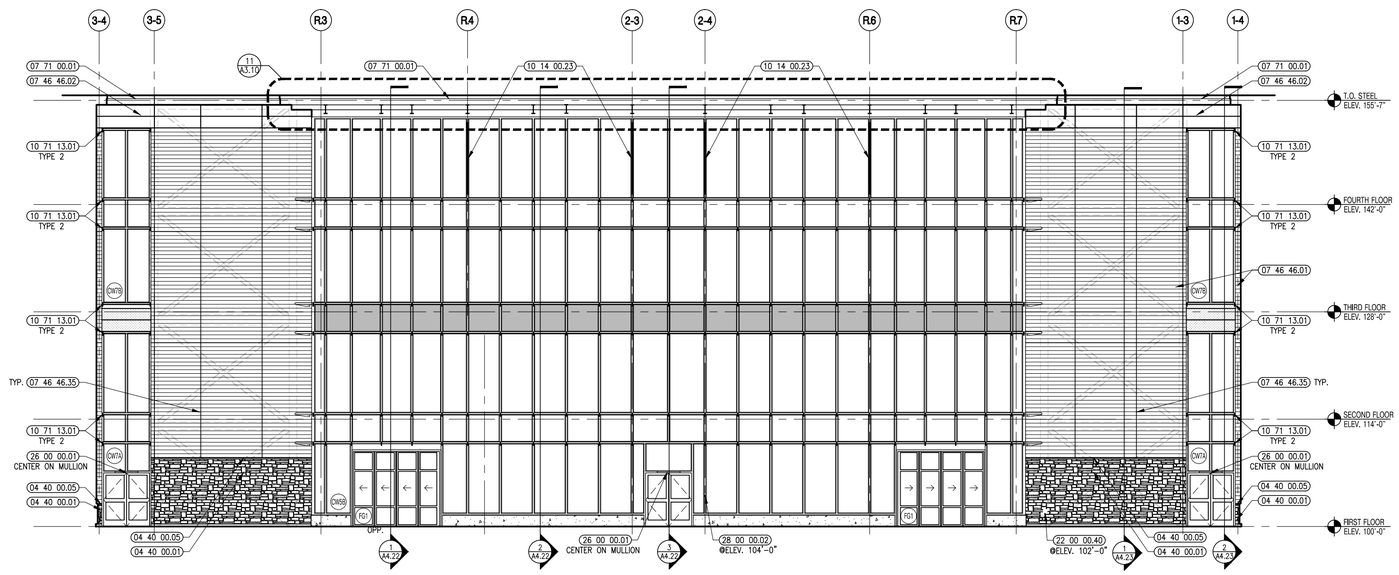

1 CORE ZONE SOUTH ELEVATION
1/8" = 1'-0"

A13 architects
526 Boston Post Rd Wayland, MA
508.358.0790 www.a13architects.com

BEVERLY MIDDLE SCHOOL

CABOT STREET
BEVERLY, MA 01915

Copyright © 2016 A13 Architects, LLC

KEYNOTE LEGEND: (REFERENCE SHEETS A0.01 & A0.02 FOR MASTER KEYNOTE LIST AND KEYNOTES NOT LISTED)

04 40 00.01	STONE VENEER
04 40 00.05	STONE SILL
07 46 46.01	MINERAL FIBER CEMENT SIDING PANEL
07 46 46.02	MINERAL FIBER CEMENT SMOOTH PANEL
07 46 46.31	OPEN OUTSIDE CORNER TRIM
07 46 46.35	BEAD REVEAL TRIM
07 71 00.01	FACTORY FABRICATED FASCIA TRIM/ROOF EDGE – CUSTOM COLOR
10 14 00.23	EXTERIOR SIGNAGE – TYPE AS SCHEDULED
10 71 13.01	ALUMINUM SUNSHADE ASSEMBLY
22 00 00.40	FREEZE PROOF WALL HYDRANT – SEE PLUMBING
26 00 00.01	LIGHT FIXTURE – SEE ELECTRICAL
28 00 00.02	CARD READER – SEE TECHNOLOGY

LEGEND

- EXPOSED CONCRETE
- STONE VENEER (04 40 00)
- FIBER CEMENT PANEL TYPE 1 (SIDING) (07 46 46)
- FIBER CEMENT PANEL TYPE 2 (SMOOTH) (07 46 46)
- FIBER CEMENT PANEL TYPE 3 (SMOOTH) (07 46 46)

GENERAL NOTES:

1. COORDINATE EXACT LOCATION OF LIGHTS, SPEAKERS AND CAMERAS WITH ARCHITECT PRIOR TO INSTALLATION.

90% CONSTRUCTION DOCUMENTS

NOT FOR CONSTRUCTION

NORTH ARROW

KEYPLAN

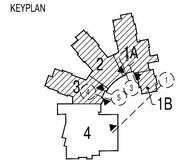

DRAWING NAME:

EXTERIOR ELEVATIONS

DRAWN BY:	RPM
REVIEWED BY:	CLO
SCALE:	As Noted
JOB NO.:	1403.00
DATE:	July 25, 2016
DRAWING NUMBER:	A3.07

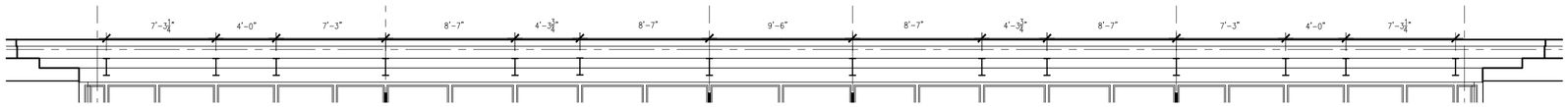

11 ROOF ELEVATION DETAIL
1/4" = 1'-0"

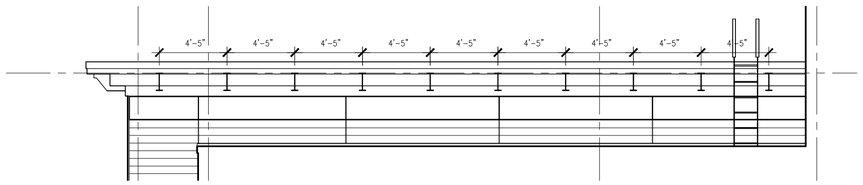

10 ROOF ELEVATION DETAIL
1/4" = 1'-0"

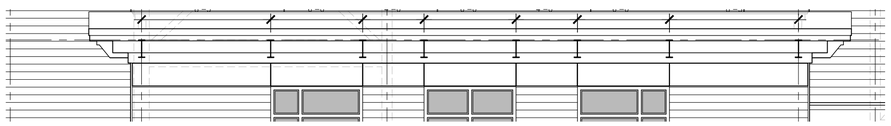

9 ROOF ELEVATION DETAIL
1/4" = 1'-0"

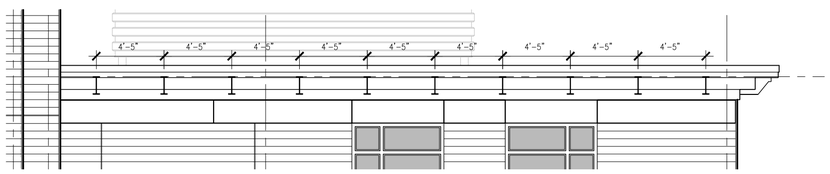

8 ROOF ELEVATION DETAIL
1/4" = 1'-0"

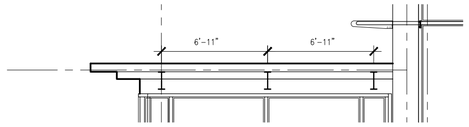

7 ROOF ELEVATION DETAIL
1/4" = 1'-0"

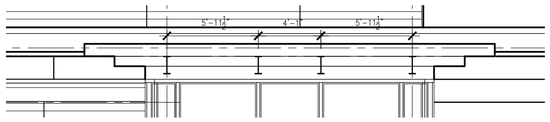

6 ROOF ELEVATION DETAIL
1/4" = 1'-0"

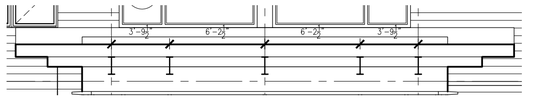

5 ROOF ELEVATION DETAIL
1/4" = 1'-0"

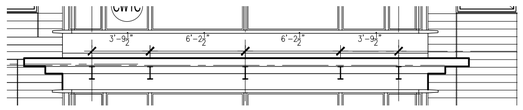

4 ROOF ELEVATION DETAIL
1/4" = 1'-0"

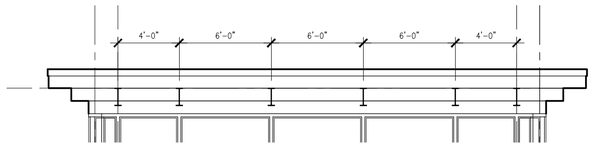

3 ROOF ELEVATION DETAIL
1/4" = 1'-0"

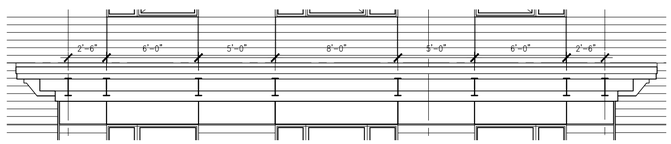

2 ROOF ELEVATION DETAIL
1/4" = 1'-0"

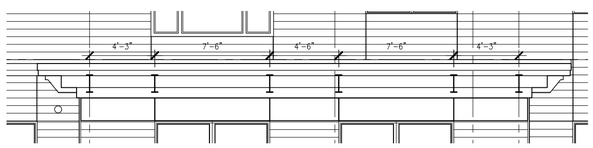

1 ROOF ELEVATION DETAIL
1/4" = 1'-0"

526 Boston Post Rd Wayland, MA
508.358.0790 www.ai3architects.com

BEVERLY MIDDLE SCHOOL

CABOT STREET
BEVERLY, MA 01915

Copyright © 2016 AI3 Architects, LLC

KEYNOTE LEGEND: (REFERENCE SHEETS A0.01 & A0.02 FOR MASTER KEYNOTE LIST AND KEYNOTES NOT LISTED)

LEGEND

- EXPOSED CONCRETE
- STONE VENEER (04 40 00)
- FIBER CEMENT PANEL TYPE 1 (SIDING) (07 46 46)
- FIBER CEMENT PANEL TYPE 2 (SMOOTH) (07 46 46)
- FIBER CEMENT PANEL TYPE 3 (SMOOTH) (07 46 46)

GENERAL NOTES:

1. COORDINATE EXACT LOCATION OF LIGHTS, SPEAKERS AND CAMERAS WITH ARCHITECT PRIOR TO INSTALLATION.

90% CONSTRUCTION DOCUMENTS

NOT FOR CONSTRUCTION

NORTH ARROW

KEYPLAN

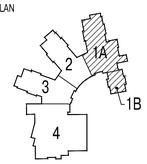

DRAWING NAME:

ENLARGED EXTERIOR ELEVATIONS

DRAWN BY: RPM
REVIEWED BY: CLO
SCALE: As Noted
JOB NO.: 1403.00
DATE: July 25, 2016
DRAWING NUMBER: A3.10

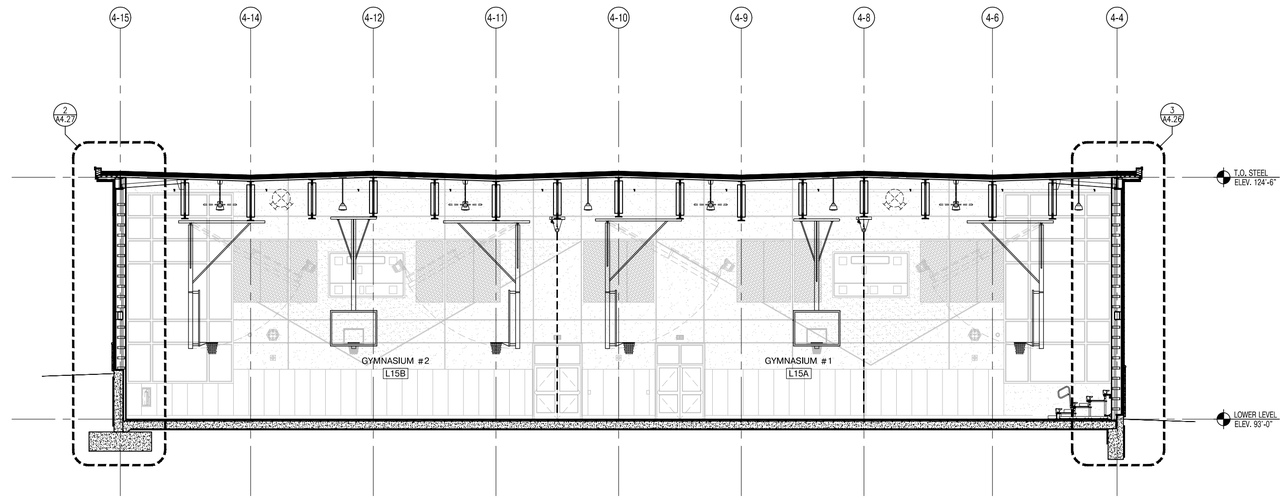

2 BUILDING SECTION
1/8" = 1'-0"

1 BUILDING SECTION
1/8" = 1'-0"

526 Boston Post Rd Wayland, MA
508.358.0790 www.ai3architects.com

BEVERLY MIDDLE SCHOOL

CABOT STREET
BEVERLY, MA 01915

KEYNOTE LEGEND: (REFERENCE SHEETS A0.01 & A0.02 FOR MASTER KEYNOTE LIST AND KEYNOTES NOT LISTED)

Copyright © 2016 Ai3 Architects, LLC

90% CONSTRUCTION DOCUMENTS

NOT FOR CONSTRUCTION

NORTH ARROW

KEYPLAN

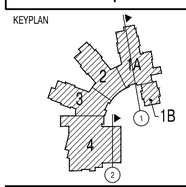

DRAWING NAME:

BUILDING SECTIONS

DRAWN BY:	RPM / JEQ
REVIEWED BY:	CLO
SCALE:	As Noted
JOB NO.:	1403.00
DATE:	July 25, 2016
DRAWING NUMBER:	A4.03

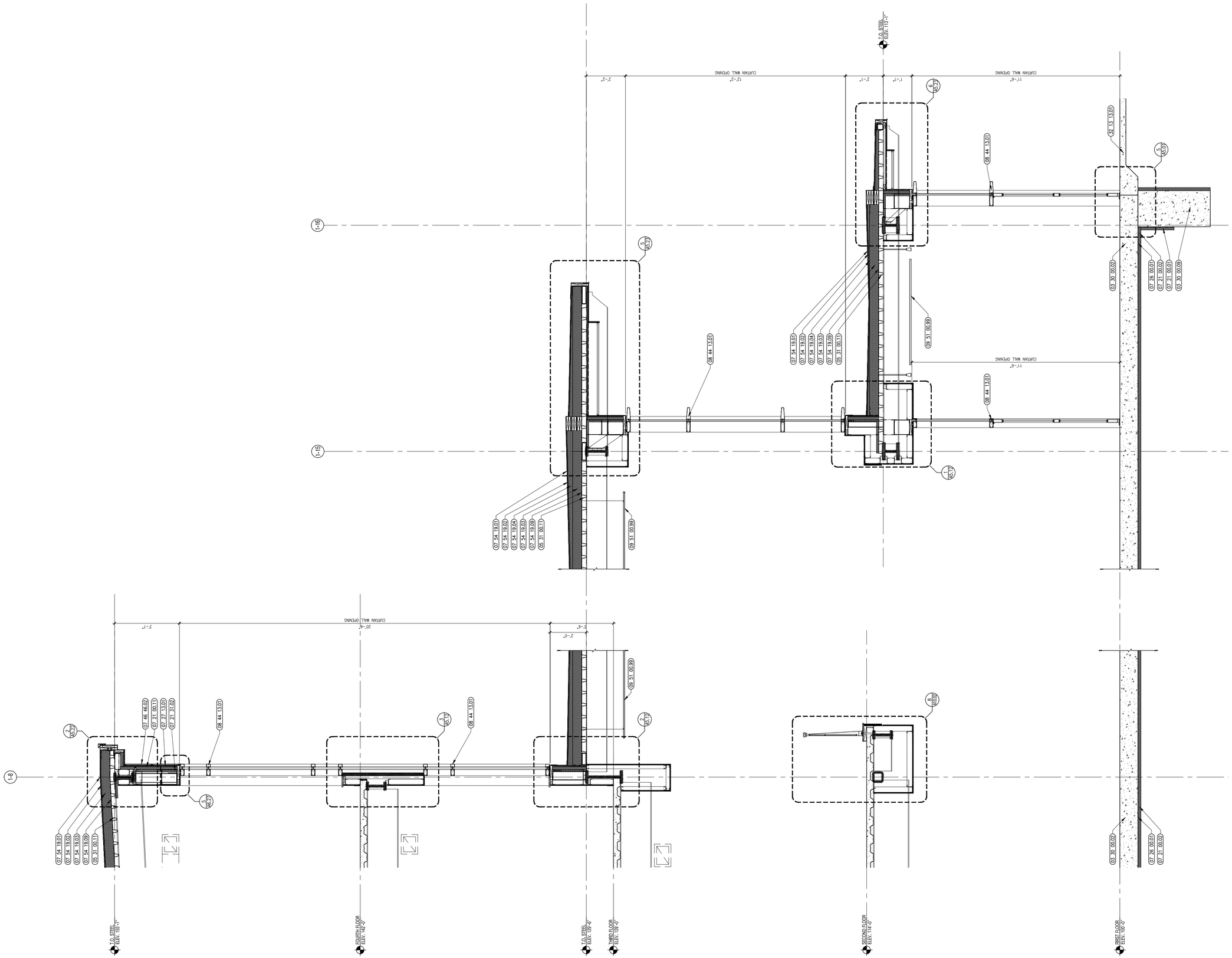

1 WALL SECTION
1/2" = 1'-0"

2 WALL SECTION
1/2" = 1'-0"

526 Boston Post Rd Wayland, MA
508.358.0790 www.ai3architects.com

BEVERLY MIDDLE SCHOOL

CABOT STREET
BEVERLY, MA 01915

Copyright © 2016 Ai3 Architects, LLC

KEYNOTE LEGEND: (REFERENCE SHEETS A0.01 & A0.02 FOR MASTER KEYNOTE LIST AND KEYNOTES NOT LISTED)

03 30 00.02	CONCRETE SLAB ON GRADE – SEE STRUCTURAL
03 30 00.09	CONCRETE GRADE BEAM – SEE STRUCTURAL
05 31 00.11	STEEL ROOF DECK – 3 INCH GALVANIZED – SEE STRUCTURAL
07 21 00.01	RIGID INSULATION – 2 INCH – FOUNDATION ONLY
07 21 00.02	RIGID INSULATION – 2 INCH – UNDER SLAB – HIGH COMPRESSIVE STRENGTH
07 21 00.11	INSULATING NAIL BASE – 2 INCH – EXTERIOR WALL
07 21 31.02	FOAM INSULATION – SPRAYED–IN–PLACE – 1–1/2 INCH DEPTH BETWEEN STUDS
07 26 00.01	VAPOR RETARDER – UNDER SLAB
07 27 13.01	AIR/VAPOR BARRIER MEMBRANE – SELF–ADHERING
07 46 46.02	MINERAL FIBER CEMENT SMOOTH PANEL
07 54 19.01	PVC SINGLE PLY MEMBRANE ROOFING
07 54 19.02	HIGH DENSITY POLYISO RECOVERY BOARD
07 54 19.03	POLYISO RIGID INSULATION
07 54 19.04	POLYISO TAPERED INSULATION
07 54 19.09	SHEET VAPOR RETARDER – TAPE SEAMS
08 44 13.01	ALUMINUM CURTAIN WALL FRAME
09 51 00.99	ACOUSTICAL CEILING – REFERENCE REFLECTED CEILING PLANS FOR TYPE AND HEIGHT
32 13 13.01	SIDEWALK – SEE CIVIL/LANDSCAPE

90% CONSTRUCTION DOCUMENTS

NOT FOR CONSTRUCTION

NORTH ARROW

KEYPLAN

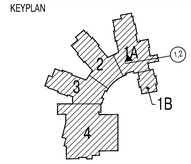

DRAWING NAME:

WALL SECTIONS

DRAWN BY:	RPM / JEQ
REVIEWED BY:	CLO
SCALE:	As Noted
JOB NO.:	1403.00
DATE:	July 25, 2016
DRAWING NUMBER:	A4.11

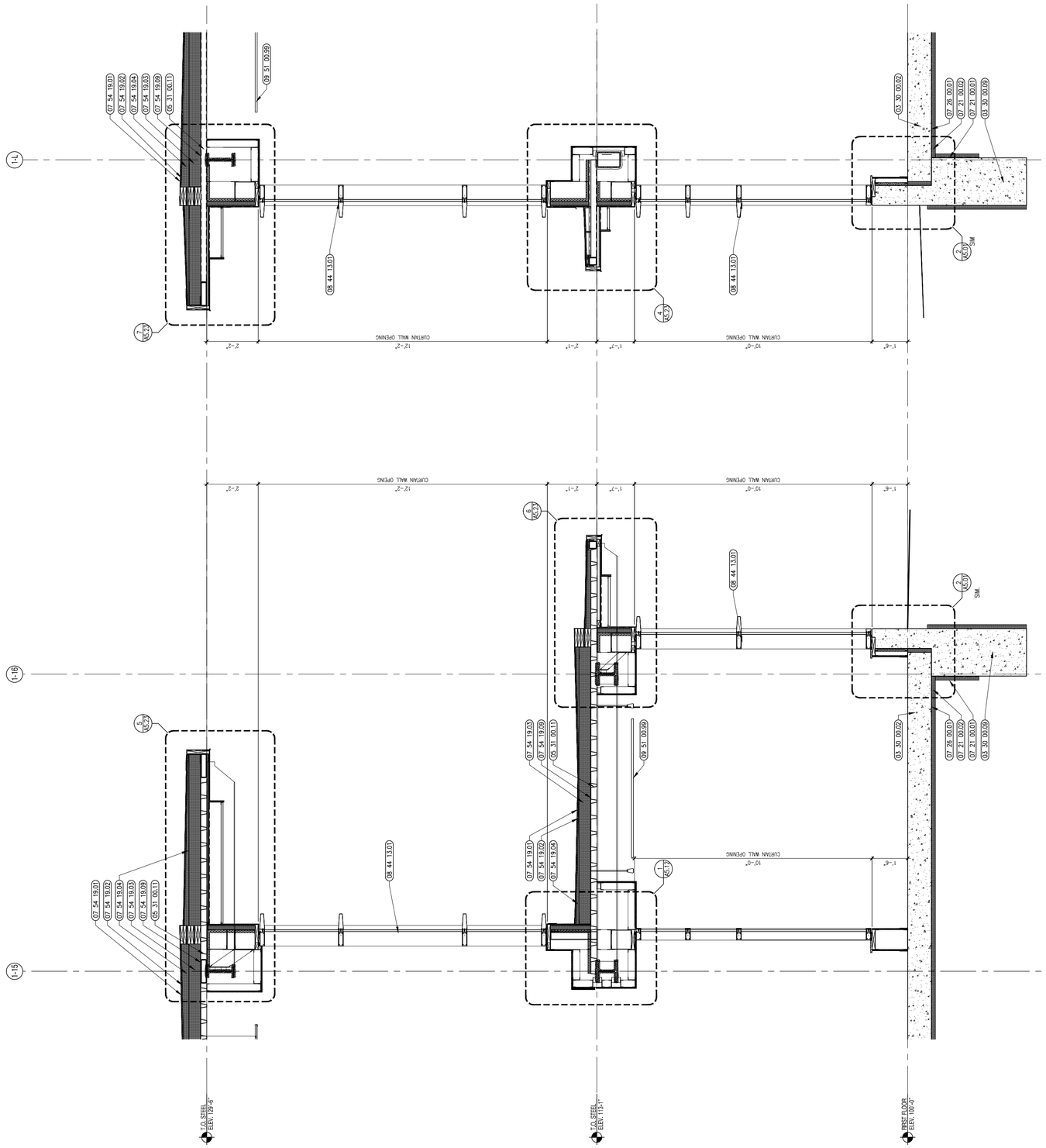

2 WALL SECTION
1/2" = 1'-0"

1 WALL SECTION
1/2" = 1'-0"

Ai3 architects
526 Boston Post Rd Wayland, MA
508.358.0790 www.ai3architects.com

BEVERLY MIDDLE SCHOOL

CABOT STREET
BEVERLY, MA 01915

Copyright © 2016 Ai3 Architects, LLC

KEYNOTE LEGEND: (REFERENCE SHEETS A0.01 & A0.02 FOR MASTER KEYNOTE LIST AND KEYNOTES NOT LISTED)

03 30 00.02	CONCRETE SLAB ON GRADE – SEE STRUCTURAL
03 30 00.09	CONCRETE GRADE BEAM – SEE STRUCTURAL
05 31 00.11	STEEL ROOF DECK – 3 INCH GALVANIZED – SEE STRUCTURAL
07 21 00.01	RIGID INSULATION – 2 INCH – FOUNDATION ONLY
07 21 00.02	RIGID INSULATION – 2 INCH – UNDER SLAB – HIGH COMPRESSIVE STRENGTH
07 26 00.01	VAPOR RETARDER – UNDER SLAB
07 54 19.01	PVC SINGLE PLY MEMBRANE ROOFING
07 54 19.02	HIGH DENSITY POLYISO RECOVERY BOARD
07 54 19.03	POLYISO RIGID INSULATION
07 54 19.04	POLYISO TAPERED INSULATION
07 54 19.09	SHEET VAPOR RETARDER – TAPE SEAMS
08 44 13.01	ALUMINUM CURTAIN WALL FRAME
09 51 00.99	ACOUSTICAL CEILING – REFERENCE REFLECTED CEILING PLANS FOR TYPE AND HEIGHT

90% CONSTRUCTION DOCUMENTS

NOT FOR CONSTRUCTION

NORTH ARROW

KEYPLAN

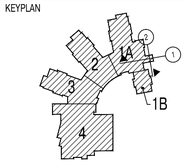

DRAWING NAME:

WALL SECTIONS

DRAWN BY:	RPM / JEQ
REVIEWED BY:	CLO
SCALE:	As Noted
JOB NO.:	1403.00
DATE:	July 25, 2016
DRAWING NUMBER:	A4.12

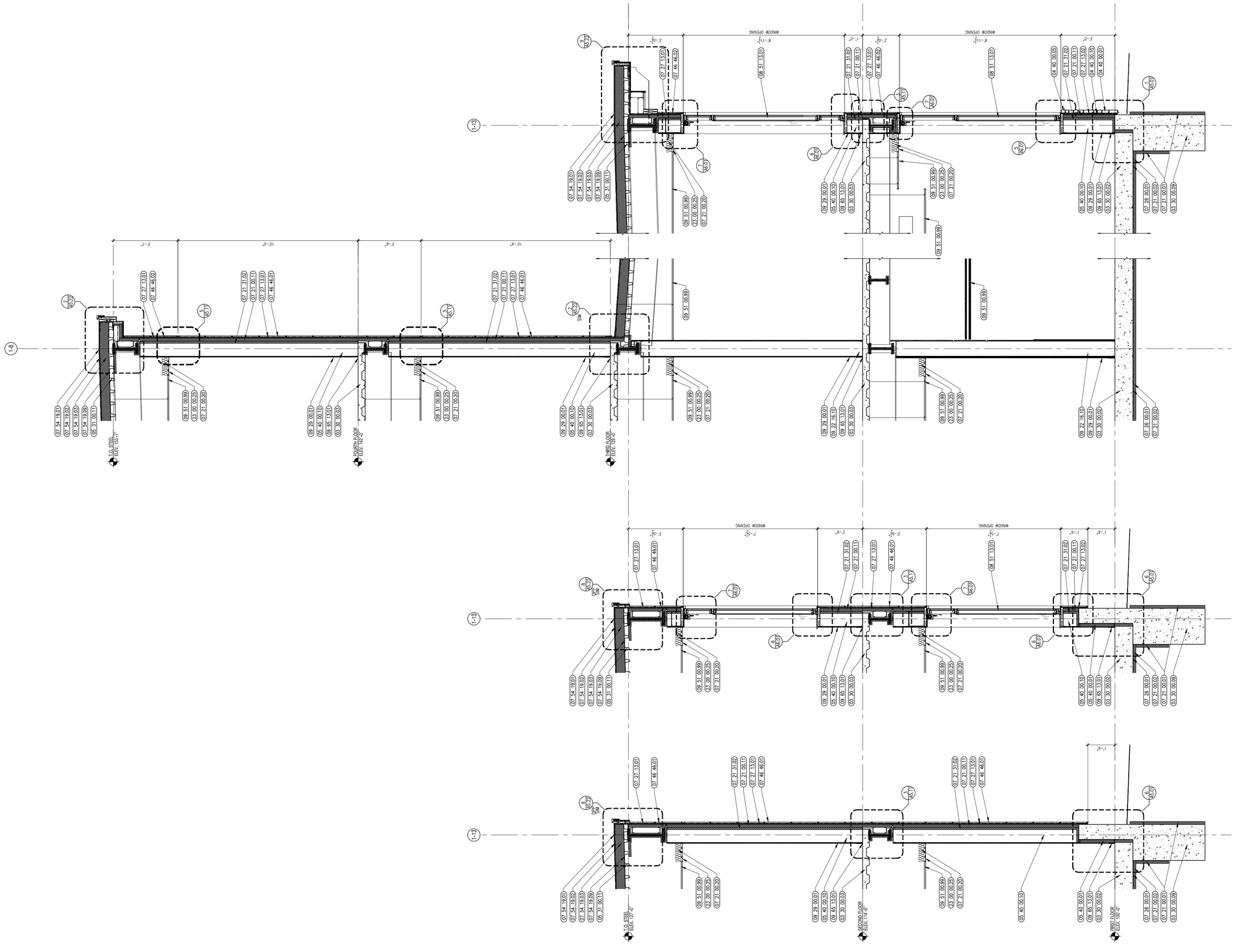

526 Boston Post Rd Wayland, MA
508.358.0790 www.ai3architects.com

BEVERLY MIDDLE SCHOOL

CABOT STREET
BEVERLY, MA 01915

Copyright © 2016 Ai3 Architects, LLC

KEYNOTE LEGEND: (REFERENCE SHEETS A0.01 & A0.02 FOR MASTER KEYNOTE LIST AND KEYNOTES NOT LISTED)

03 30 00.02	CONCRETE SLAB ON GRADE – SEE STRUCTURAL
03 30 00.03	CONCRETE SLAB ON DECK – SEE STRUCTURAL
03 30 00.09	CONCRETE GRADE BEAM – SEE STRUCTURAL
04 40 00.01	STONE VENEER
04 40 00.05	STONE SILL
04 40 00.10	GALVANIZED METAL LATH
05 31 00.11	STEEL ROOF DECK – 3 INCH GALVANIZED – SEE STRUCTURAL
05 40 00.01	STEEL STUDS – 1 5/8 INCH – 16 INCHES O.C. MAX
05 40 00.10	STEEL STUDS – 10 INCH – 16 INCHES O.C. MAX
07 21 00.01	RIGID INSULATION – 2 INCH – FOUNDATION ONLY
07 21 00.02	RIGID INSULATION – 2 INCH – UNDER SLAB – HIGH COMPRESSIVE STRENGTH
07 21 00.11	INSULATING NAIL BASE – 2 INCH – EXTERIOR WALL
07 21 00.20	GLASS FIBER INSULATION
07 21 31.02	FOAM INSULATION – SPRAYED-IN-PLACE – 1-1/2 INCH DEPTH BETWEEN STUDS
07 26 00.01	VAPOR RETARDER – UNDER SLAB
07 27 13.01	AIR/VAPOR BARRIER MEMBRANE – SELF-ADHERING
07 27 13.02	AIR/VAPOR BARRIER MEMBRANE – SELF-ADHERING – 2 LAYERS
07 46 46.01	MINERAL FIBER CEMENT SIDING PANEL
07 46 46.02	MINERAL FIBER CEMENT SMOOTH PANEL
07 54 19.01	PVC SINGLE PLY MEMBRANE ROOFING
07 54 19.02	HIGH DENSITY POLYISO RECOVERY BOARD
07 54 19.03	POLYISO RIGID INSULATION
07 54 19.09	SHEET VAPOR RETARDER – TAPE SEAMS
08 51 13.01	ALUMINUM WINDOW – SEE SCHEDULE
09 22 16.10	METAL STUD 10 INCH – 16 INCHES O.C. MAX
09 29 00.01	5/8 INCH GYPSUM BOARD – LEVEL 4 FINISH
09 51 00.99	ACOUSTICAL CEILING – REFERENCE REFLECTED CEILING PLANS FOR TYPE AND HEIGHT
09 65 13.01	RUBBER BASE – 4"
23 00 00.25	RADIANT PANEL – SEE HVAC

90% CONSTRUCTION DOCUMENTS

NOT FOR CONSTRUCTION

NORTH ARROW

KEYPLAN

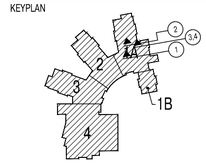

DRAWING NAME:

WALL SECTIONS

DRAWN BY:	RPM / JEQ
REVIEWED BY:	CLO
SCALE:	As Noted
JOB NO.:	1403.00
DATE:	July 25, 2016
DRAWING NUMBER:	A4.13

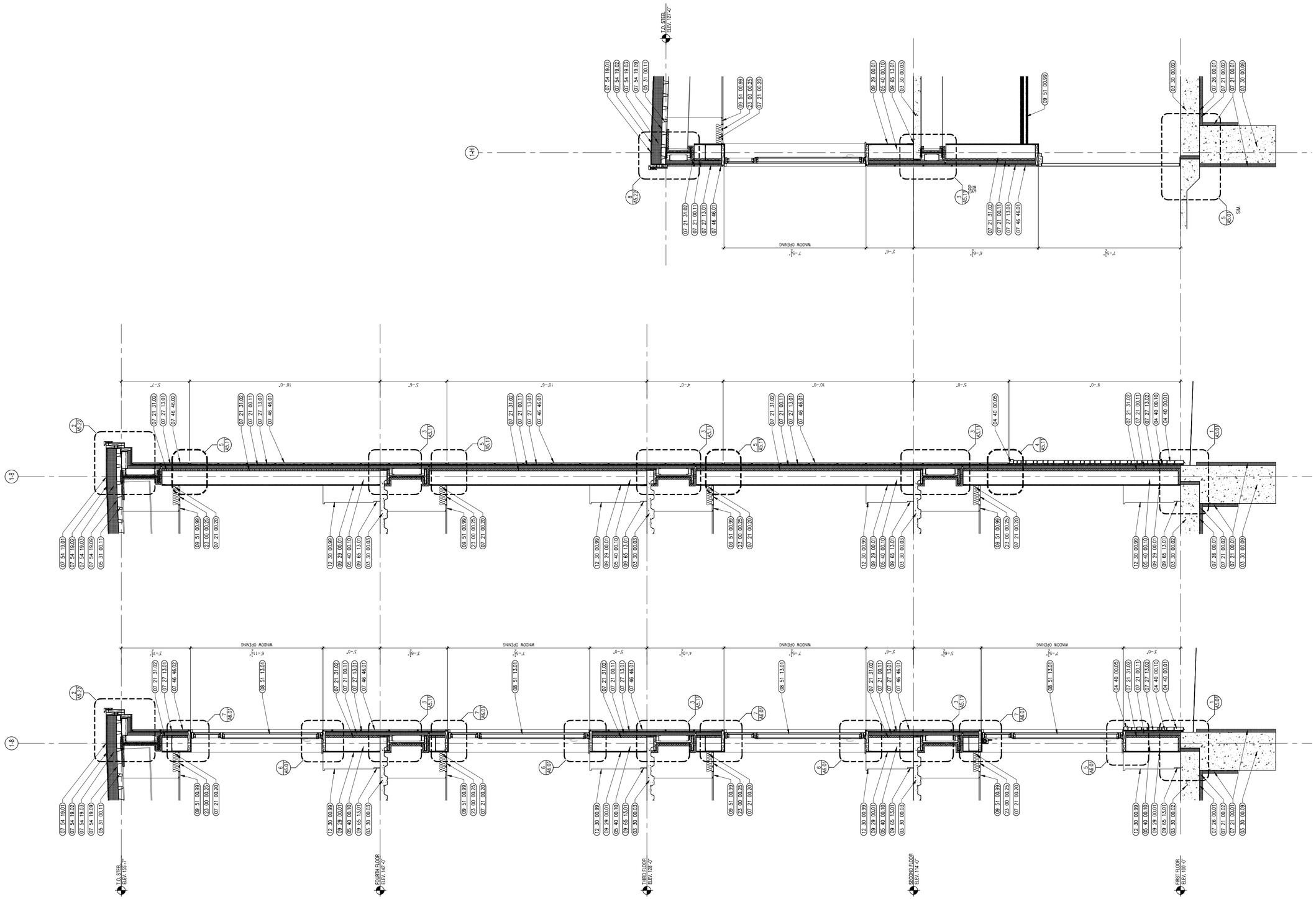

526 Boston Post Rd Wayland, MA
508.358.0790 www.ai3architects.com

BEVERLY MIDDLE SCHOOL

CABOT STREET
BEVERLY, MA 01915

Copyright © 2016 Ai3 Architects, LLC

KEYNOTE LEGEND: (REFERENCE SHEETS A0.01 & A0.02 FOR MASTER KEYNOTE LIST AND KEYNOTES NOT LISTED)

03 30 00.02	CONCRETE SLAB ON GRADE – SEE STRUCTURAL
03 30 00.03	CONCRETE SLAB ON DECK – SEE STRUCTURAL
03 30 00.09	CONCRETE GRADE BEAM – SEE STRUCTURAL
04 40 00.01	STONE VENEER
04 40 00.05	STONE SILL
04 40 00.10	GALVANIZED METAL LATH
05 31 00.11	STEEL ROOF DECK – 3 INCH GALVANIZED – SEE STRUCTURAL
05 40 00.10	STEEL STUDS – 10 INCH – 16 INCHES O.C. MAX
07 21 00.01	RIGID INSULATION – 2 INCH – FOUNDATION ONLY
07 21 00.02	RIGID INSULATION – 2 INCH – UNDER SLAB – HIGH COMPRESSIVE STRENGTH
07 21 00.11	INSULATING NAIL BASE – 2 INCH – EXTERIOR WALL
07 21 00.20	GLASS FIBER INSULATION
07 21 31.02	FOAM INSULATION – SPRAYED-IN-PLACE – 1-1/2 INCH DEPTH BETWEEN STUDS
07 26 00.01	VAPOR RETARDER – UNDER SLAB
07 27 13.01	AIR/VAPOR BARRIER MEMBRANE – SELF-ADHERING
07 27 13.02	AIR/VAPOR BARRIER MEMBRANE – SELF-ADHERING – 2 LAYERS
07 46 46.01	MINERAL FIBER CEMENT SIDING PANEL
07 46 46.02	MINERAL FIBER CEMENT SMOOTH PANEL
07 54 19.01	PVC SINGLE PLY MEMBRANE ROOFING
07 54 19.02	HIGH DENSITY POLYISO RECOVERY BOARD
07 54 19.03	POLYISO RIGID INSULATION
07 54 19.09	SHEET VAPOR RETARDER – TAPE SEAMS
08 51 13.01	ALUMINUM WINDOW – SEE SCHEDULE
09 29 00.01	5/8 INCH GYPSUM BOARD – LEVEL 4 FINISH
09 51 00.99	ACOUSTICAL CEILING – REFERENCE REFLECTED CEILING PLANS FOR TYPE AND HEIGHT
09 65 13.01	RUBBER BASE – 4"
12 30 00.99	CASEWORK – REFERENCE INTERIOR ELEVATIONS TYPE
23 00 00.25	RADIANT PANEL – SEE HVAC

90% CONSTRUCTION DOCUMENTS

NOT FOR CONSTRUCTION

NORTH ARROW

KEYPLAN

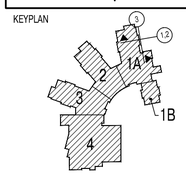

DRAWING NAME:

WALL SECTIONS

DRAWN BY:	RPM / JEQ
REVIEWED BY:	CLO
SCALE:	As Noted
JOB NO.:	1403.00
DATE:	July 25, 2016
DRAWING NUMBER:	A4.14

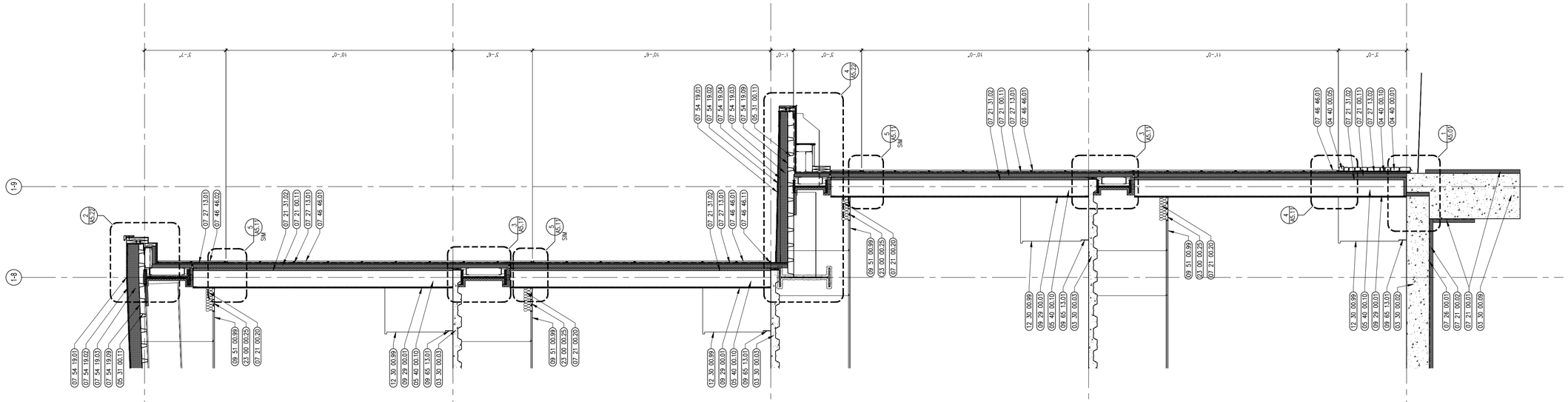

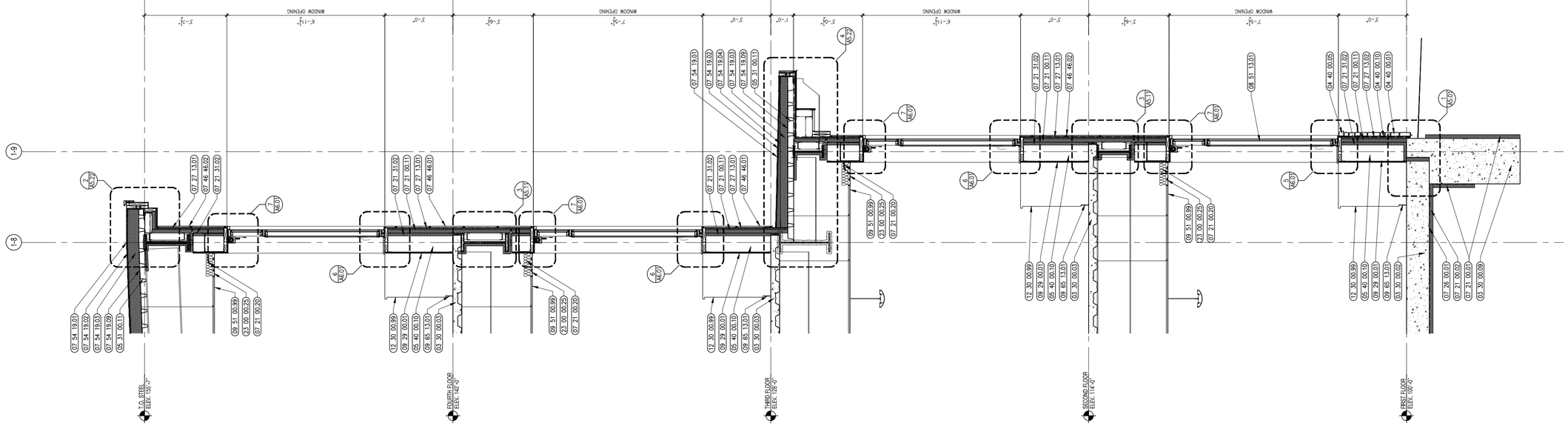

526 Boston Post Rd Wayland, MA
508.358.0790 www.ai3architects.com

BEVERLY MIDDLE SCHOOL

CABOT STREET
BEVERLY, MA 01915

Copyright © 2016 Ai3 Architects, LLC

KEYNOTE LEGEND: (REFERENCE SHEETS A0.01 & A0.02 FOR MASTER KEYNOTE LIST AND KEYNOTES NOT LISTED)

03 30 00.02	CONCRETE SLAB ON GRADE – SEE STRUCTURAL
03 30 00.03	CONCRETE SLAB ON DECK – SEE STRUCTURAL
03 30 00.09	CONCRETE GRADE BEAM – SEE STRUCTURAL
04 40 00.01	STONE VENEER
04 40 00.05	STONE SILL
04 40 00.10	GALVANIZED METAL LATH
05 31 00.11	STEEL ROOF DECK – 3 INCH GALVANIZED – SEE STRUCTURAL
05 40 00.10	STEEL STUDS – 10 INCH – 16 INCHES O.C. MAX
07 21 00.01	RIGID INSULATION – 2 INCH – FOUNDATION ONLY
07 21 00.02	RIGID INSULATION – 2 INCH – UNDER SLAB – HIGH COMPRESSIVE STRENGTH
07 21 00.11	INSULATING NAIL BASE – 2 INCH – EXTERIOR WALL
07 21 00.20	GLASS FIBER INSULATION
07 21 31.02	FOAM INSULATION – SPRAYED–IN–PLACE – 1–1/2 INCH DEPTH BETWEEN STUDS
07 26 00.01	VAPOR RETARDER – UNDER SLAB
07 27 13.01	AIR/VAPOR BARRIER MEMBRANE – SELF–ADHERING
07 27 13.02	AIR/VAPOR BARRIER MEMBRANE – SELF–ADHERING – 2 LAYERS
07 46 46.01	MINERAL FIBER CEMENT SIDING PANEL
07 46 46.02	MINERAL FIBER CEMENT SMOOTH PANEL
07 46 46.11	STARTER TRACK/STRIP
07 54 19.01	PVC SINGLE PLY MEMBRANE ROOFING
07 54 19.02	HIGH DENSITY POLYISO RECOVERY BOARD
07 54 19.03	POLYISO RIGID INSULATION
07 54 19.04	POLYISO TAPERED INSULATION
07 54 19.09	SHEET VAPOR RETARDER – TAPE SEAMS
08 51 13.01	ALUMINUM WINDOW – SEE SCHEDULE
09 29 00.01	5/8 INCH GYPSUM BOARD – LEVEL 4 FINISH
09 51 00.99	ACOUSTICAL CEILING – REFERENCE REFLECTED CEILING PLANS FOR TYPE AND HEIGHT
09 65 13.01	RUBBER BASE – 4"
12 30 00.99	CASEWORK – REFERENCE INTERIOR ELEVATIONS TYPE
23 00 00.25	RADIANT PANEL – SEE HVAC

90% CONSTRUCTION DOCUMENTS

NOT FOR CONSTRUCTION

NORTH ARROW

KEYPLAN

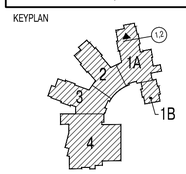

DRAWING NAME:

WALL SECTIONS

DRAWN BY:	RPM / JEQ
REVIEWED BY:	CLO
SCALE:	As Noted
JOB NO.:	1403.00
DATE:	July 25, 2016
DRAWING NUMBER:	A4.15

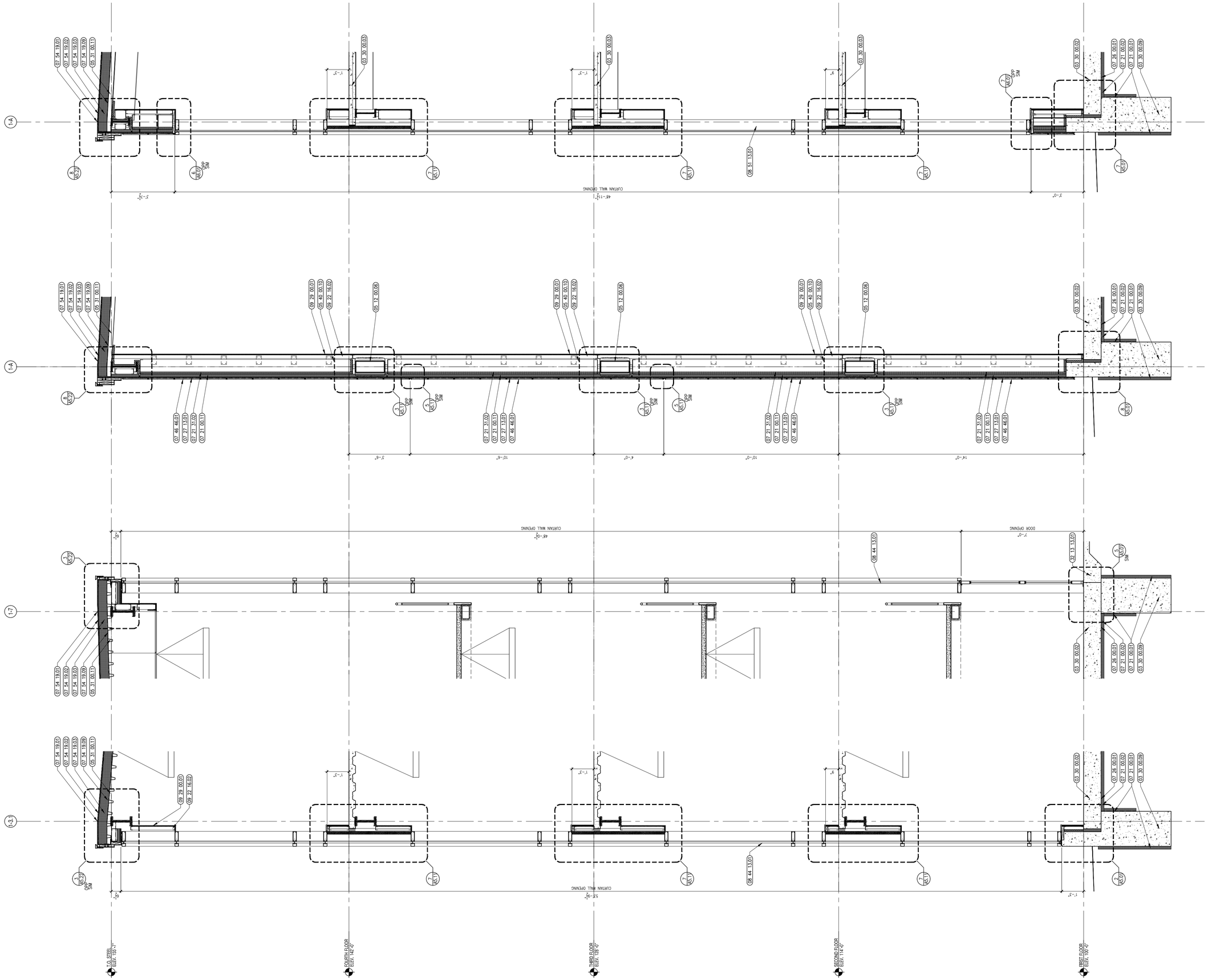

526 Boston Post Rd Wayland, MA
508.358.0790 www.ai3architects.com

BEVERLY MIDDLE SCHOOL

CABOT STREET
BEVERLY, MA 01915

Copyright © 2016 Ai3 Architects, LLC

KEYNOTE LEGEND: (REFERENCE SHEETS A0.01 & A0.02 FOR MASTER KEYNOTE LIST AND KEYNOTES NOT LISTED)

03 30 00.02	CONCRETE SLAB ON GRADE – SEE STRUCTURAL
03 30 00.03	CONCRETE SLAB ON DECK – SEE STRUCTURAL
03 30 00.09	CONCRETE GRADE BEAM – SEE STRUCTURAL
05 12 00.06	STEEL TUBE – SEE STRUCTURAL
05 31 00.11	STEEL ROOF DECK – 3 INCH GALVANIZED – SEE STRUCTURAL
05 40 00.10	STEEL STUDS – 10 INCH – 16 INCHES O.C. MAX
07 21 00.01	RIGID INSULATION – 2 INCH – FOUNDATION ONLY
07 21 00.02	RIGID INSULATION – 2 INCH – UNDER SLAB – HIGH COMPRESSIVE STRENGTH
07 21 00.11	INSULATING NAIL BASE – 2 INCH – EXTERIOR WALL
07 21 31.02	FOAM INSULATION – SPRAYED-IN-PLACE – 1-1/2 INCH DEPTH BETWEEN STUDS
07 26 00.01	VAPOR RETARDER – UNDER SLAB
07 27 13.01	AIR/VAPOR BARRIER MEMBRANE – SELF-ADHERING
07 46 46.01	MINERAL FIBER CEMENT SIDING PANEL
07 54 19.01	PVC SINGLE PLY MEMBRANE ROOFING
07 54 19.02	HIGH DENSITY POLYISO RECOVERY BOARD
07 54 19.03	POLYISO RIGID INSULATION
07 54 19.09	SHEET VAPOR RETARDER – TAPE SEAMS
08 44 13.01	ALUMINUM CURTAIN WALL FRAME
08 51 13.01	ALUMINUM WINDOW – SEE SCHEDULE
09 22 16.02	METAL STUD 2-1/2 INCH – 16 INCHES O.C. MAX
09 29 00.01	5/8 INCH GYPSUM BOARD – LEVEL 4 FINISH
32 13 13.01	SIDEWALK – SEE CIVIL/LANDSCAPE

90% CONSTRUCTION DOCUMENTS

NOT FOR CONSTRUCTION

NORTH ARROW

KEYPLAN

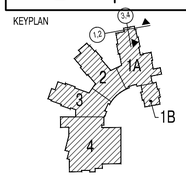

DRAWING NAME:

WALL SECTIONS

DRAWN BY:	RPM / JEQ
REVIEWED BY:	CLO
SCALE:	As Noted
JOB NO.:	1403.00
DATE:	July 25, 2016
DRAWING NUMBER:	A4.16

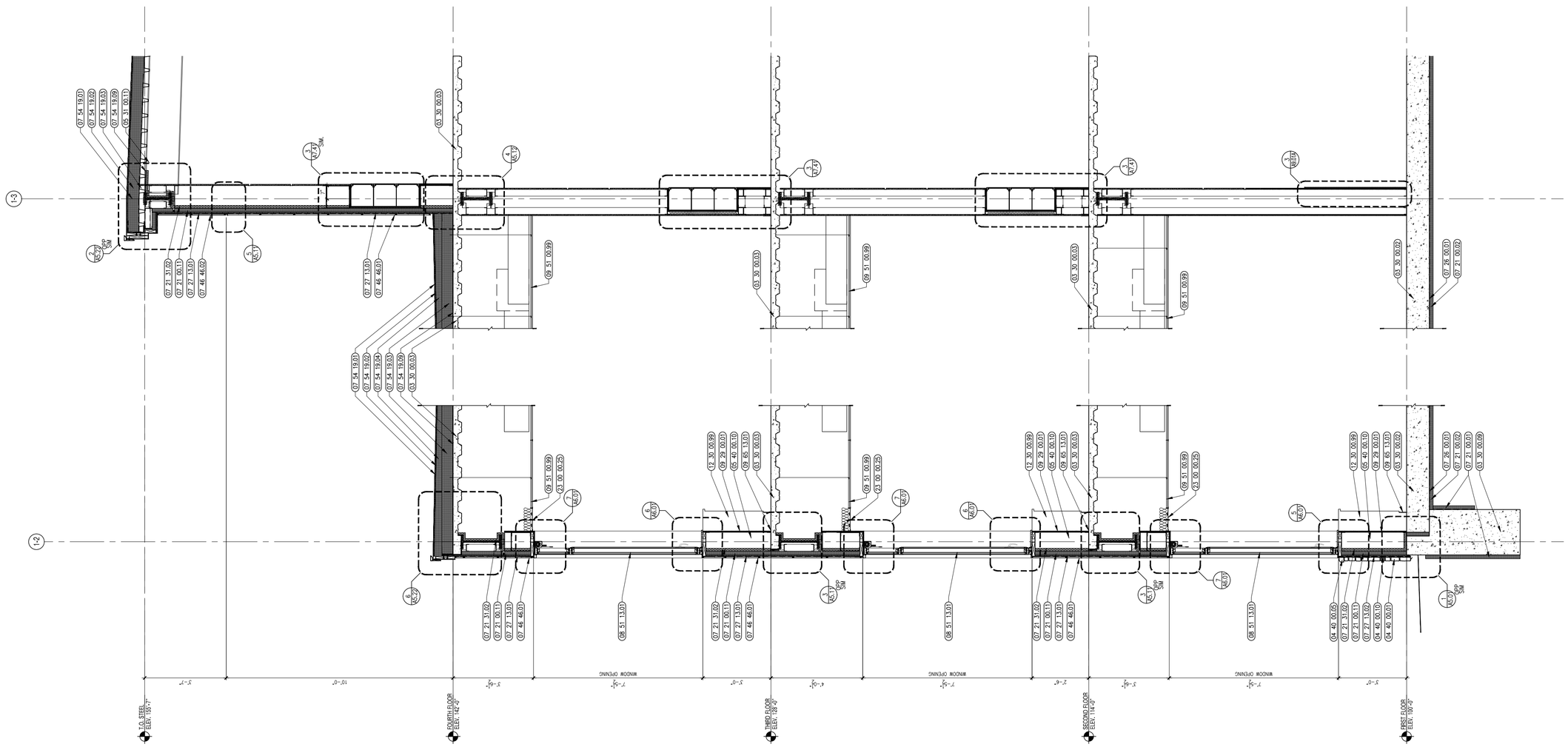

526 Boston Post Rd Wayland, MA
508.358.0790 www.ai3architects.com

Copyright © 2016 Ai3 Architects, LLC

BEVERLY MIDDLE SCHOOL

CABOT STREET
BEVERLY, MA 01915

KEYNOTE LEGEND: (REFERENCE SHEETS A0.01 & A0.02 FOR MASTER KEYNOTE LIST AND KEYNOTES NOT LISTED)

03 30 00.02	CONCRETE SLAB ON GRADE – SEE STRUCTURAL
03 30 00.03	CONCRETE SLAB ON DECK – SEE STRUCTURAL
03 30 00.09	CONCRETE GRADE BEAM – SEE STRUCTURAL
04 40 00.01	STONE VENEER
04 40 00.05	STONE SILL
04 40 00.10	GALVANIZED METAL LATH
05 31 00.11	STEEL ROOF DECK – 3 INCH GALVANIZED – SEE STRUCTURAL
05 40 00.10	STEEL STUDS – 10 INCH – 16 INCHES O.C. MAX
07 21 00.01	RIGID INSULATION – 2 INCH – FOUNDATION ONLY
07 21 00.02	RIGID INSULATION – 2 INCH – UNDER SLAB – HIGH COMPRESSIVE STRENGTH
07 21 00.11	INSULATING NAIL BASE – 2 INCH – EXTERIOR WALL
07 21 31.02	FOAM INSULATION – SPRAYED-IN-PLACE – 1-1/2 INCH DEPTH BETWEEN STUDS
07 26 00.01	VAPOR RETARDER – UNDER SLAB
07 27 13.01	AIR/VAPOR BARRIER MEMBRANE – SELF-ADHERING
07 27 13.02	AIR/VAPOR BARRIER MEMBRANE – SELF-ADHERING – 2 LAYERS
07 46 46.01	MINERAL FIBER CEMENT SIDING PANEL
07 46 46.02	MINERAL FIBER CEMENT SMOOTH PANEL
07 54 19.01	PVC SINGLE PLY MEMBRANE ROOFING
07 54 19.02	HIGH DENSITY POLYISO RECOVERY BOARD
07 54 19.03	POLYISO RIGID INSULATION
07 54 19.04	POLYISO TAPERED INSULATION
07 54 19.09	SHEET VAPOR RETARDER – TAPE SEAMS
08 51 13.01	ALUMINUM WINDOW – SEE SCHEDULE
09 29 00.01	5/8 INCH GYPSUM BOARD – LEVEL 4 FINISH
09 51 00.99	ACOUSTICAL CEILING – REFERENCE REFLECTED CEILING PLANS FOR TYPE AND HEIGHT
09 65 13.01	RUBBER BASE – 4"
12 30 00.99	CASEWORK – REFERENCE INTERIOR ELEVATIONS TYPE
23 00 00.25	RADIANT PANEL – SEE HVAC

90% CONSTRUCTION DOCUMENTS

NOT FOR CONSTRUCTION

NORTH ARROW

KEYPLAN

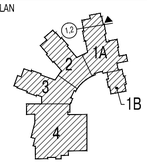

DRAWING NAME:

WALL SECTIONS

DRAWN BY:	RPM
REVIEWED BY:	CLO
SCALE:	As Noted
JOB NO.:	1403.00
DATE:	July 25, 2016
DRAWING NUMBER:	A4.17

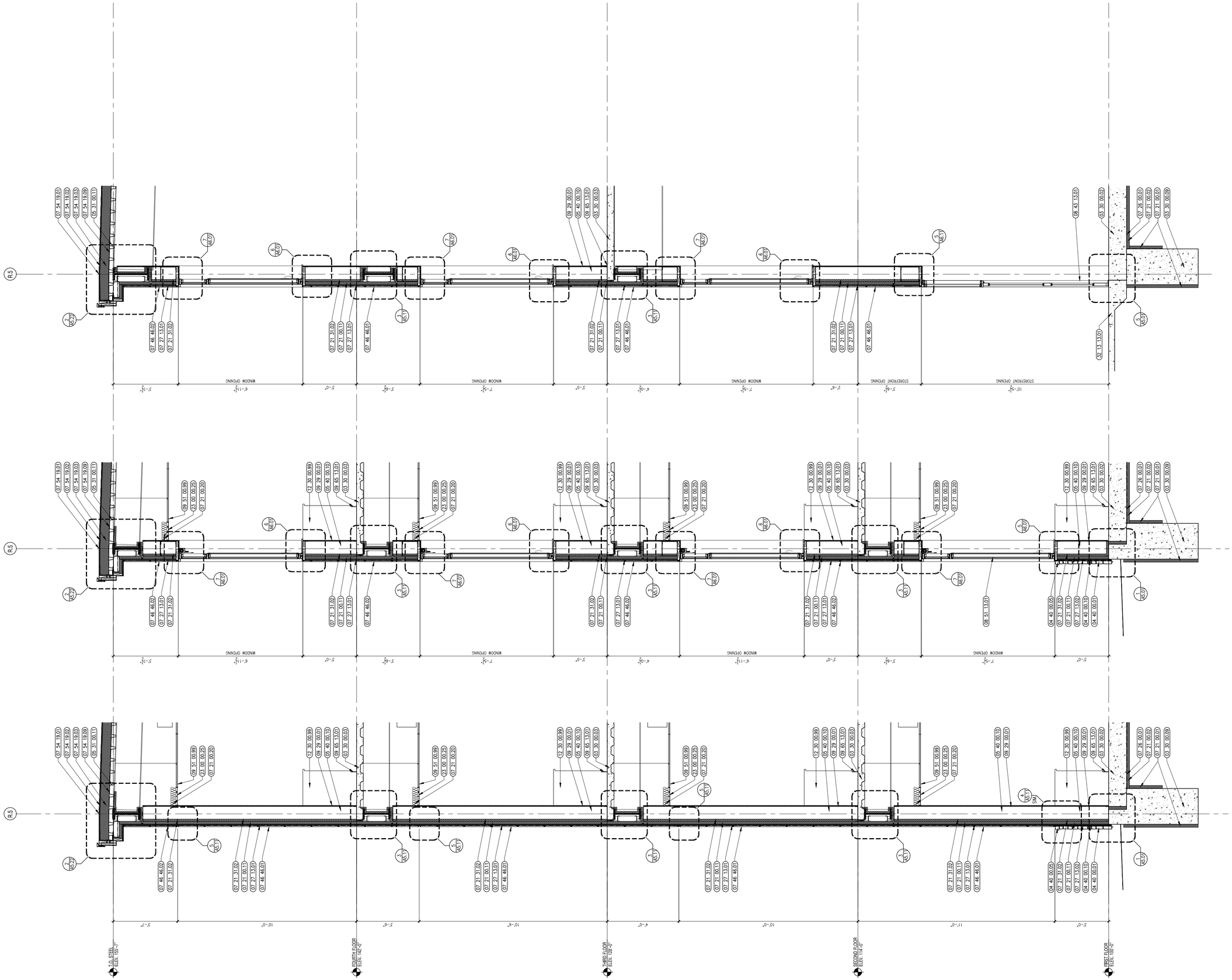

526 Boston Post Rd Wayland, MA
508.358.0790 www.ai3architects.com

BEVERLY MIDDLE SCHOOL

CABOT STREET
BEVERLY, MA 01915

Copyright © 2016 Ai3 Architects, LLC

KEYNOTE LEGEND: (REFERENCE SHEETS A0.01 & A0.02 FOR MASTER KEYNOTE LIST AND KEYNOTES NOT LISTED)

03 30 00.02	CONCRETE SLAB ON GRADE – SEE STRUCTURAL
03 30 00.03	CONCRETE SLAB ON DECK – SEE STRUCTURAL
03 30 00.09	CONCRETE GRADE BEAM – SEE STRUCTURAL
04 40 00.01	STONE VENEER
04 40 00.05	STONE SILL
04 40 00.10	GALVANIZED METAL LATH
05 31 00.11	STEEL ROOF DECK – 3 INCH GALVANIZED – SEE STRUCTURAL
05 40 00.10	STEEL STUDS – 10 INCH – 16 INCHES O.C. MAX
07 21 00.01	RIGID INSULATION – 2 INCH – FOUNDATION ONLY
07 21 00.02	RIGID INSULATION – 2 INCH – UNDER SLAB – HIGH COMPRESSIVE STRENGTH
07 21 00.11	INSULATING NAIL BASE – 2 INCH – EXTERIOR WALL
07 21 00.20	GLASS FIBER INSULATION
07 21 31.02	FOAM INSULATION – SPRAYED-IN-PLACE – 1-1/2 INCH DEPTH BETWEEN STUDS
07 26 00.01	VAPOR RETARDER – UNDER SLAB
07 27 13.01	AIR/VAPOR BARRIER MEMBRANE – SELF-ADHERING
07 27 13.02	AIR/VAPOR BARRIER MEMBRANE – SELF-ADHERING – 2 LAYERS
07 46 46.01	MINERAL FIBER CEMENT SIDING PANEL
07 46 46.02	MINERAL FIBER CEMENT SMOOTH PANEL
07 54 19.01	PVC SINGLE PLY MEMBRANE ROOFING
07 54 19.02	HIGH DENSITY POLYISO RECOVERY BOARD
07 54 19.03	POLYISO RIGID INSULATION
07 54 19.09	SHEET VAPOR RETARDER – TAPE SEAMS
08 43 13.01	ALUMINUM STOREFRONT FRAME
08 51 13.01	ALUMINUM WINDOW – SEE SCHEDULE
09 29 00.01	5/8 INCH GYPSUM BOARD – LEVEL 4 FINISH
09 51 00.99	ACOUSTICAL CEILING – REFERENCE REFLECTED CEILING PLANS FOR TYPE AND HEIGHT
09 65 13.01	RUBBER BASE – 4"
12 30 00.99	CASEWORK – REFERENCE INTERIOR ELEVATIONS TYPE
23 00 00.25	RADIANT PANEL – SEE HVAC
32 13 13.01	SIDEWALK – SEE CIVIL/LANDSCAPE

90% CONSTRUCTION DOCUMENTS

NOT FOR CONSTRUCTION

NORTH ARROW

KEYPLAN

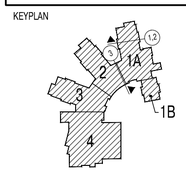

DRAWING NAME:

WALL SECTIONS

DRAWN BY:	RPM
REVIEWED BY:	CLO
SCALE: As Noted	DRAWING NUMBER:
JOB NO.: 1403.00	A4.18
DATE: July 25, 2016	

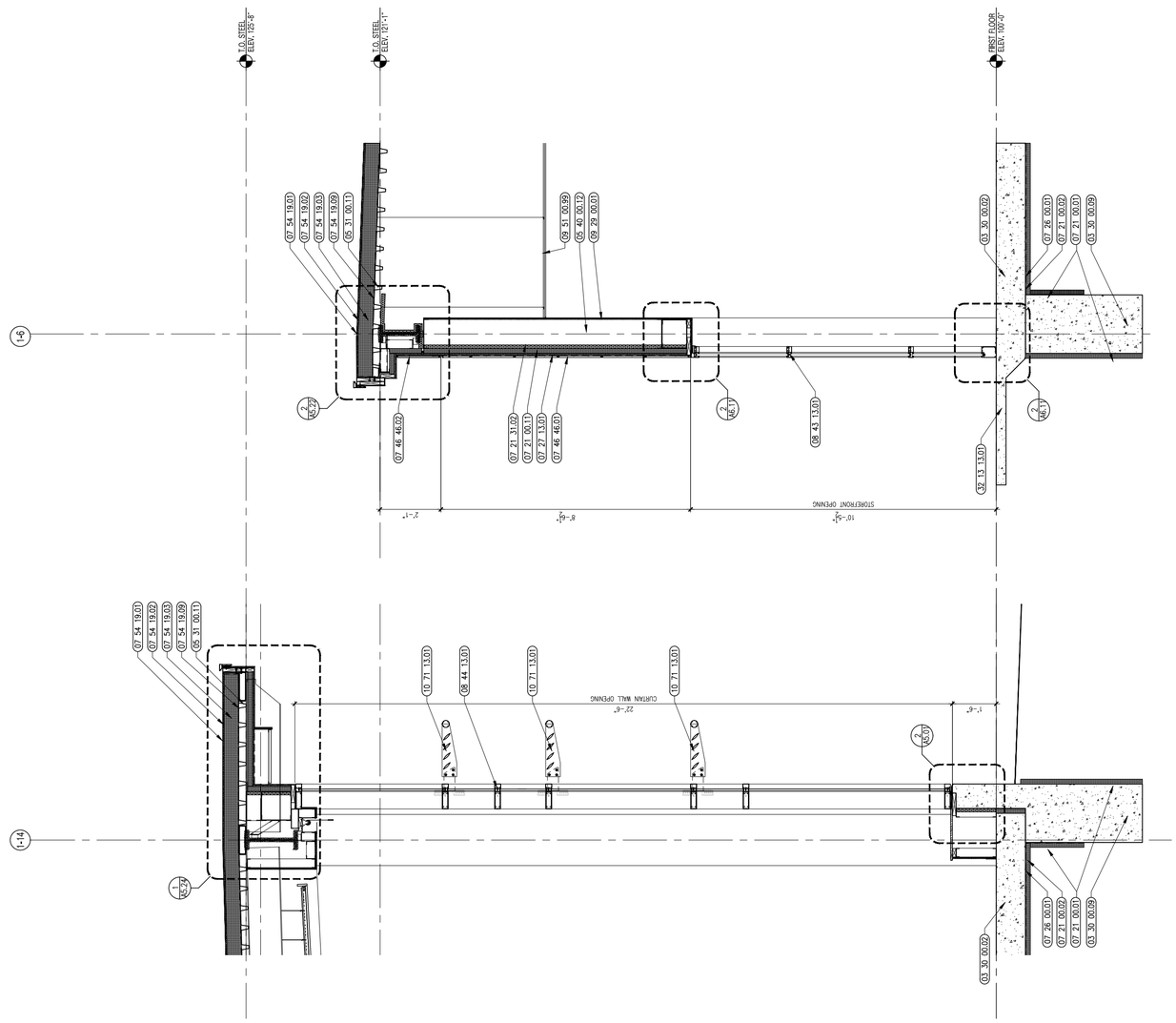

1 WALL SECTION
1/2" = 1'-0"

2 WALL SECTION
1/2" = 1'-0"

Ai3 architects
526 Boston Post Rd Wayland, MA
508.358.0790 www.ai3architects.com

BEVERLY MIDDLE SCHOOL

CABOT STREET
BEVERLY, MA 01915

Copyright © 2016 Ai3 Architects, LLC

KEYNOTE LEGEND: (REFERENCE SHEETS A0.01 & A0.02 FOR MASTER KEYNOTE LIST AND KEYNOTES NOT LISTED)

03 30 00.02	CONCRETE SLAB ON GRADE – SEE STRUCTURAL
03 30 00.09	CONCRETE GRADE BEAM – SEE STRUCTURAL
05 31 00.11	STEEL ROOF DECK – 3 INCH GALVANIZED – SEE STRUCTURAL
05 40 00.12	STEEL STUDS – 12 INCH – 16 INCHES O.C. MAX
07 21 00.01	RIGID INSULATION – 2 INCH – FOUNDATION ONLY
07 21 00.02	RIGID INSULATION – 2 INCH – UNDER SLAB – HIGH COMPRESSIVE STRENGTH
07 21 00.11	INSULATING NAIL BASE – 2 INCH – EXTERIOR WALL
07 21 31.02	FOAM INSULATION – SPRAYED-IN-PLACE – 1-1/2 INCH DEPTH BETWEEN STUDS
07 26 00.01	VAPOR RETARDER – UNDER SLAB
07 27 13.01	AIR/VAPOR BARRIER MEMBRANE – SELF-ADHERING
07 46 46.01	MINERAL FIBER CEMENT SIDING PANEL
07 46 46.02	MINERAL FIBER CEMENT SMOOTH PANEL
07 54 19.01	PVC SINGLE PLY MEMBRANE ROOFING
07 54 19.02	HIGH DENSITY POLYISO RECOVERY BOARD
07 54 19.03	POLYISO RIGID INSULATION
07 54 19.09	SHEET VAPOR RETARDER – TAPE SEAMS
08 43 13.01	ALUMINUM STOREFRONT FRAME
08 44 13.01	ALUMINUM CURTAIN WALL FRAME
09 29 00.01	5/8 INCH GYPSUM BOARD – LEVEL 4 FINISH
09 51 00.99	ACOUSTICAL CEILING – REFERENCE REFLECTED CEILING PLANS FOR TYPE AND HEIGHT
10 71 13.01	ALUMINUM SUNSHADE ASSEMBLY
32 13 13.01	SIDEWALK – SEE CIVIL/LANDSCAPE

90% CONSTRUCTION DOCUMENTS

NOT FOR CONSTRUCTION

NORTH ARROW

KEYPLAN

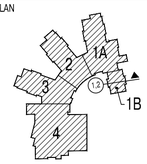

DRAWING NAME:

WALL SECTIONS

DRAWN BY:	RPM
REVIEWED BY:	CLO
SCALE:	As Noted
JOB NO.:	1403.00
DATE:	July 25, 2016
DRAWING NUMBER:	A4.19

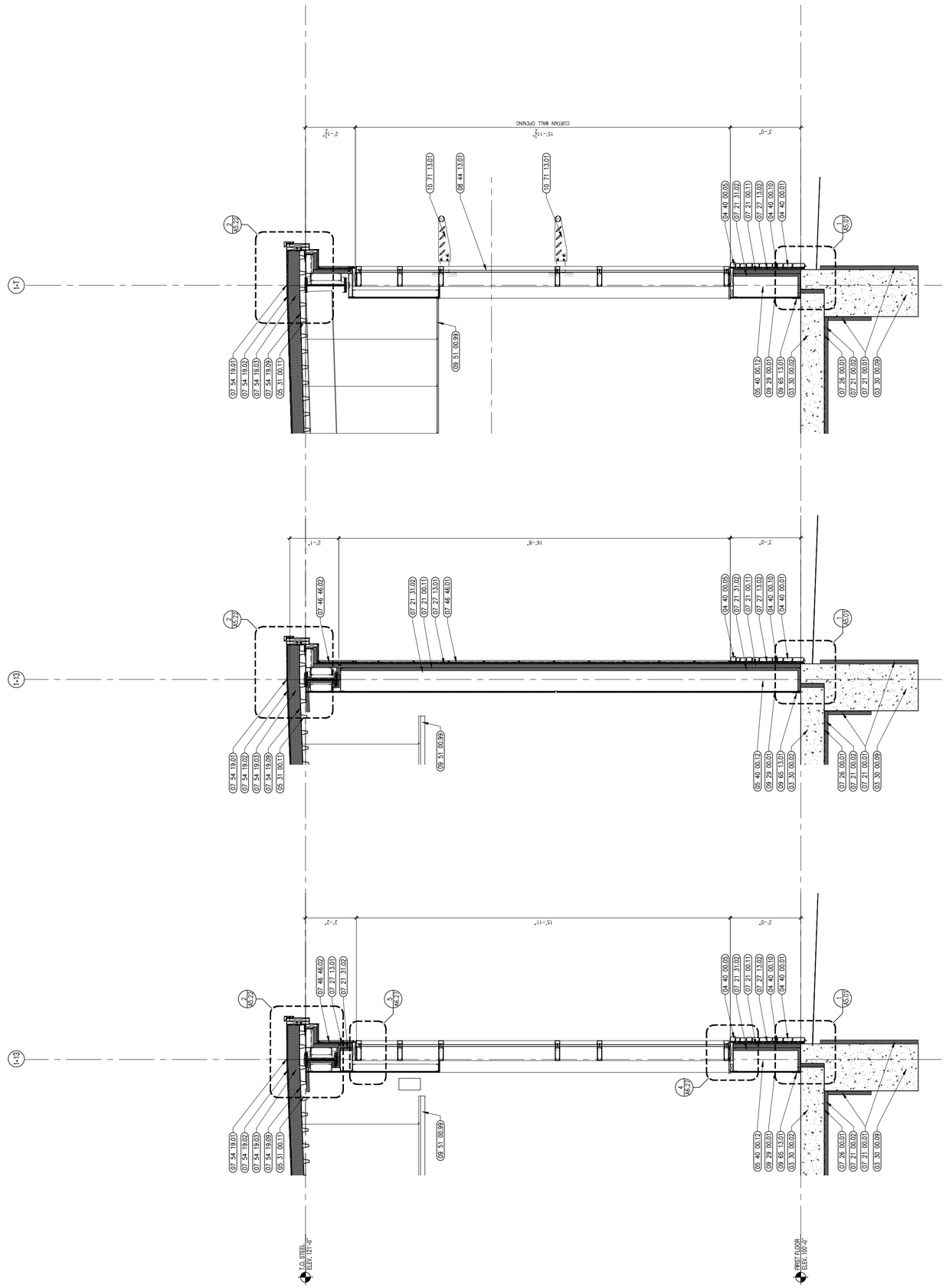

1 WALL SECTION
1/2" = 1'-0"

2 WALL SECTION
1/2" = 1'-0"

Ai3 architects
526 Boston Post Rd Wayland, MA
508.358.0790 www.ai3architects.com

BEVERLY MIDDLE SCHOOL

CABOT STREET
BEVERLY, MA 01915

Copyright © 2016 Ai3 Architects, LLC

KEYNOTE LEGEND: (REFERENCE SHEETS A0.01 & A0.02 FOR MASTER KEYNOTE LIST AND KEYNOTES NOT LISTED)

03 30 00.02	CONCRETE SLAB ON GRADE – SEE STRUCTURAL
03 30 00.09	CONCRETE GRADE BEAM – SEE STRUCTURAL
04 40 00.01	STONE VENEER
04 40 00.05	STONE SILL
04 40 00.10	GALVANIZED METAL LATH
05 31 00.11	STEEL ROOF DECK – 3 INCH GALVANIZED – SEE STRUCTURAL
05 40 00.12	STEEL STUDS – 12 INCH – 16 INCHES O.C. MAX
07 21 00.01	RIGID INSULATION – 2 INCH – FOUNDATION ONLY
07 21 00.02	RIGID INSULATION – 2 INCH – UNDER SLAB – HIGH COMPRESSIVE STRENGTH
07 21 00.11	INSULATING NAIL BASE – 2 INCH – EXTERIOR WALL
07 21 31.02	FOAM INSULATION – SPRAYED-IN-PLACE – 1-1/2 INCH DEPTH BETWEEN STUDS
07 26 00.01	VAPOR RETARDER – UNDER SLAB
07 27 13.01	AIR/VAPOR BARRIER MEMBRANE – SELF-ADHERING
07 27 13.02	AIR/VAPOR BARRIER MEMBRANE – SELF-ADHERING – 2 LAYERS
07 46 46.01	MINERAL FIBER CEMENT SIDING PANEL
07 46 46.02	MINERAL FIBER CEMENT SMOOTH PANEL
07 54 19.01	PVC SINGLE PLY MEMBRANE ROOFING
07 54 19.02	HIGH DENSITY POLYISO RECOVERY BOARD
07 54 19.03	POLYISO RIGID INSULATION
07 54 19.09	SHEET VAPOR RETARDER – TAPE SEAMS
08 44 13.01	ALUMINUM CURTAIN WALL FRAME
09 29 00.01	5/8 INCH GYPSUM BOARD – LEVEL 4 FINISH
09 51 00.99	ACOUSTICAL CEILING – REFERENCE REFLECTED CEILING PLANS FOR TYPE AND HEIGHT
09 65 13.01	RUBBER BASE – 4"
10 71 13.01	ALUMINUM SUNSHADE ASSEMBLY

90% CONSTRUCTION DOCUMENTS

NOT FOR CONSTRUCTION

NORTH ARROW

KEYPLAN

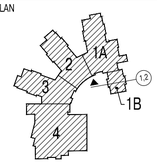

DRAWING NAME:

WALL SECTIONS

DRAWN BY:	RPM
REVIEWED BY:	CLO
SCALE:	As Noted
JOB NO.:	1403.00
DATE:	July 25, 2016
DRAWING NUMBER:	A4.20

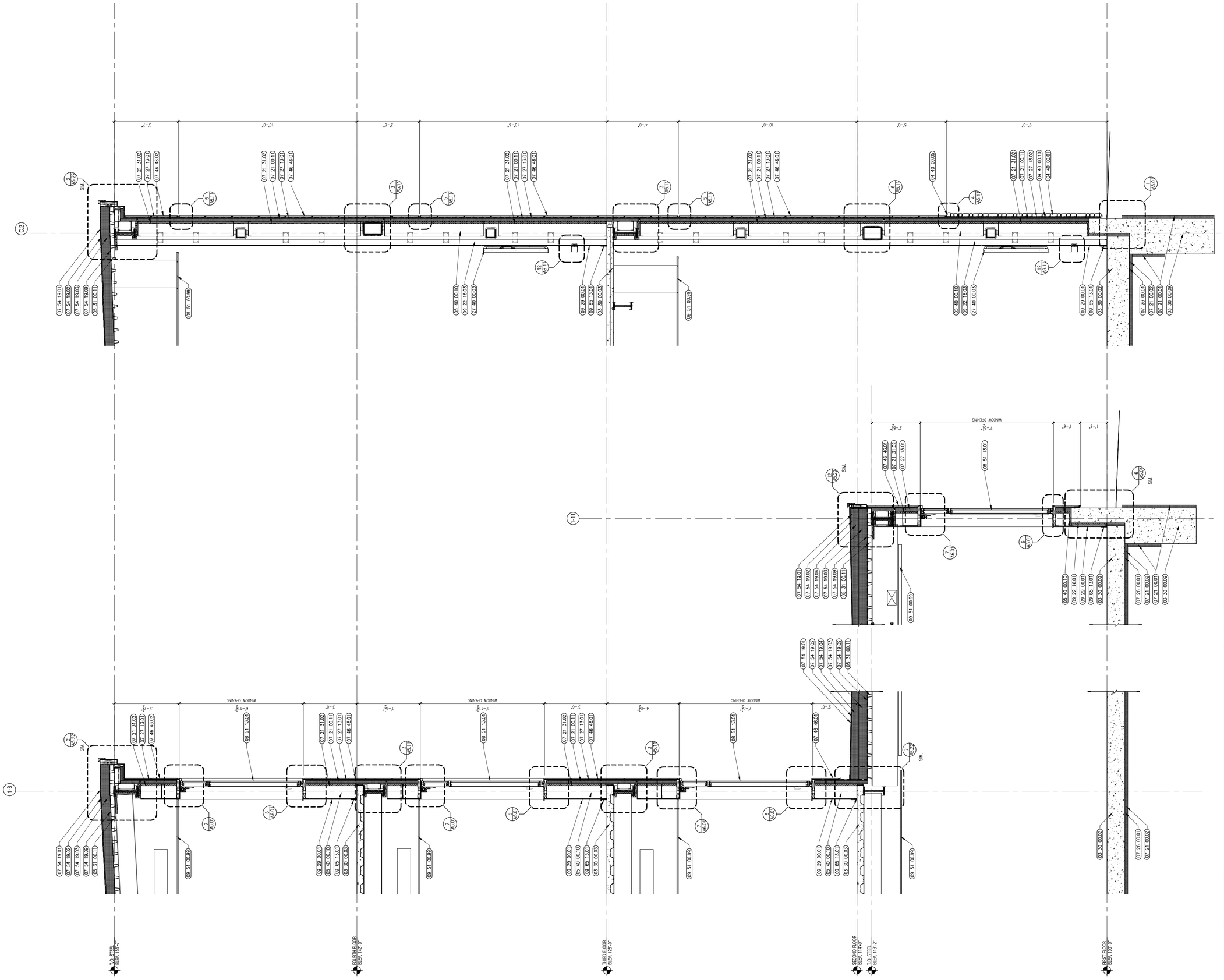

526 Boston Post Rd Wayland, MA
508.358.0790 www.ai3architects.com

BEVERLY MIDDLE SCHOOL

CABOT STREET
BEVERLY, MA 01915

Copyright © 2016 Ai3 Architects, LLC

KEYNOTE LEGEND: (REFERENCE SHEETS A0.01 & A0.02 FOR MASTER KEYNOTE LIST AND KEYNOTES NOT LISTED)

03 30 00.02	CONCRETE SLAB ON GRADE – SEE STRUCTURAL
03 30 00.03	CONCRETE SLAB ON DECK – SEE STRUCTURAL
03 30 00.09	CONCRETE GRADE BEAM – SEE STRUCTURAL
04 40 00.01	STONE VENEER
04 40 00.05	STONE SILL
04 40 00.10	GALVANIZED METAL LATH
05 31 00.11	STEEL ROOF DECK – 3 INCH GALVANIZED – SEE STRUCTURAL
05 40 00.10	STEEL STUDS – 10 INCH – 16 INCHES O.C. MAX
07 21 00.01	RIGID INSULATION – 2 INCH – FOUNDATION ONLY
07 21 00.02	RIGID INSULATION – 2 INCH – UNDER SLAB – HIGH COMPRESSIVE STRENGTH
07 21 00.11	INSULATING NAIL BASE – 2 INCH – EXTERIOR WALL
07 21 31.02	FOAM INSULATION – SPRAYED-IN-PLACE – 1-1/2 INCH DEPTH BETWEEN STUDS
07 26 00.01	VAPOR RETARDER – UNDER SLAB
07 27 13.01	AIR/VAPOR BARRIER MEMBRANE – SELF-ADHERING
07 27 13.02	AIR/VAPOR BARRIER MEMBRANE – SELF-ADHERING – 2 LAYERS
07 46 46.01	MINERAL FIBER CEMENT SIDING PANEL
07 46 46.02	MINERAL FIBER CEMENT SMOOTH PANEL
07 54 19.01	PVC SINGLE PLY MEMBRANE ROOFING
07 54 19.02	HIGH DENSITY POLYISO RECOVERY BOARD
07 54 19.03	POLYISO RIGID INSULATION
07 54 19.04	POLYISO TAPERED INSULATION
07 54 19.09	SHEET VAPOR RETARDER – TAPE SEAMS
08 51 13.01	ALUMINUM WINDOW – SEE SCHEDULE
09 22 16.01	METAL STUD 1-5/8 INCH – 16 INCHES O.C. MAX
09 22 16.03	METAL STUD 3-5/8 INCH – 16 INCHES O.C. MAX
09 29 00.01	5/8 INCH GYPSUM BOARD – LEVEL 4 FINISH
09 51 00.99	ACOUSTICAL CEILING – REFERENCE REFLECTED CEILING PLANS FOR TYPE AND HEIGHT
09 65 13.01	RUBBER BASE – 4"

90% CONSTRUCTION DOCUMENTS

NOT FOR CONSTRUCTION

NORTH ARROW

KEYPLAN

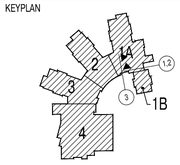

DRAWING NAME:

WALL SECTIONS

DRAWN BY:	RPM
REVIEWED BY:	CLO
SCALE:	As Noted
JOB NO.:	1403.00
DATE:	July 25, 2016
DRAWING NUMBER:	A4.21

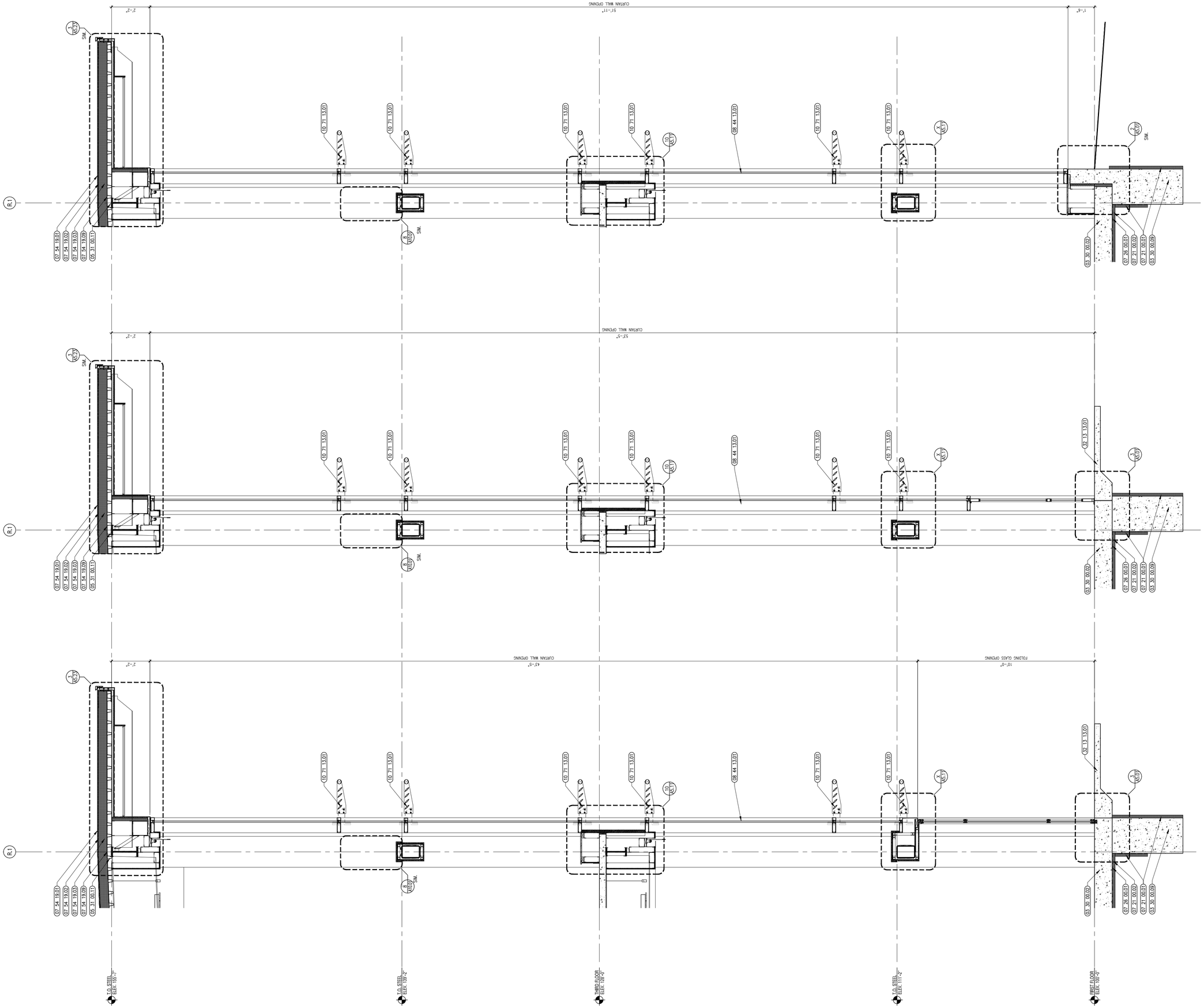

3 WALL SECTION
1/2" = 1'-0"

2 WALL SECTION
1/2" = 1'-0"

1 WALL SECTION
1/2" = 1'-0"

526 Boston Post Rd Wayland, MA
508.358.0790 www.ai3architects.com

BEVERLY MIDDLE SCHOOL

CABOT STREET
BEVERLY, MA 01915

Copyright © 2016 AI3 Architects, LLC

KEYNOTE LEGEND: (REFERENCE SHEETS A0.01 & A0.02 FOR MASTER KEYNOTE LIST AND KEYNOTES NOT LISTED)

03 30 00.02	CONCRETE SLAB ON GRADE – SEE STRUCTURAL
03 30 00.09	CONCRETE GRADE BEAM – SEE STRUCTURAL
05 31 00.11	STEEL ROOF DECK – 3 INCH GALVANIZED – SEE STRUCTURAL
07 21 00.01	RIGID INSULATION – 2 INCH – FOUNDATION ONLY
07 21 00.02	RIGID INSULATION – 2 INCH – UNDER SLAB – HIGH COMPRESSIVE STRENGTH
07 26 00.01	VAPOR RETARDER – UNDER SLAB
07 54 19.01	PVC SINGLE PLY MEMBRANE ROOFING
07 54 19.02	HIGH DENSITY POLYISO RECOVERY BOARD
07 54 19.03	POLYISO RIGID INSULATION
07 54 19.09	SHEET VAPOR RETARDER – TAPE SEAMS
08 44 13.01	ALUMINUM CURTAIN WALL FRAME
10 71 13.01	ALUMINUM SUNSHADE ASSEMBLY
32 13 13.01	SIDEWALK – SEE CIVIL/LANDSCAPE

90% CONSTRUCTION DOCUMENTS

NOT FOR CONSTRUCTION

NORTH ARROW

KEYPLAN

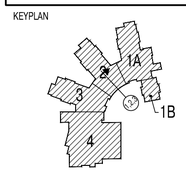

DRAWING NAME:

WALL SECTIONS

DRAWN BY:	RPM
REVIEWED BY:	CLO
SCALE:	As Noted
JOB NO.:	1403.00
DATE:	July 25, 2016
DRAWING NUMBER:	A4.22

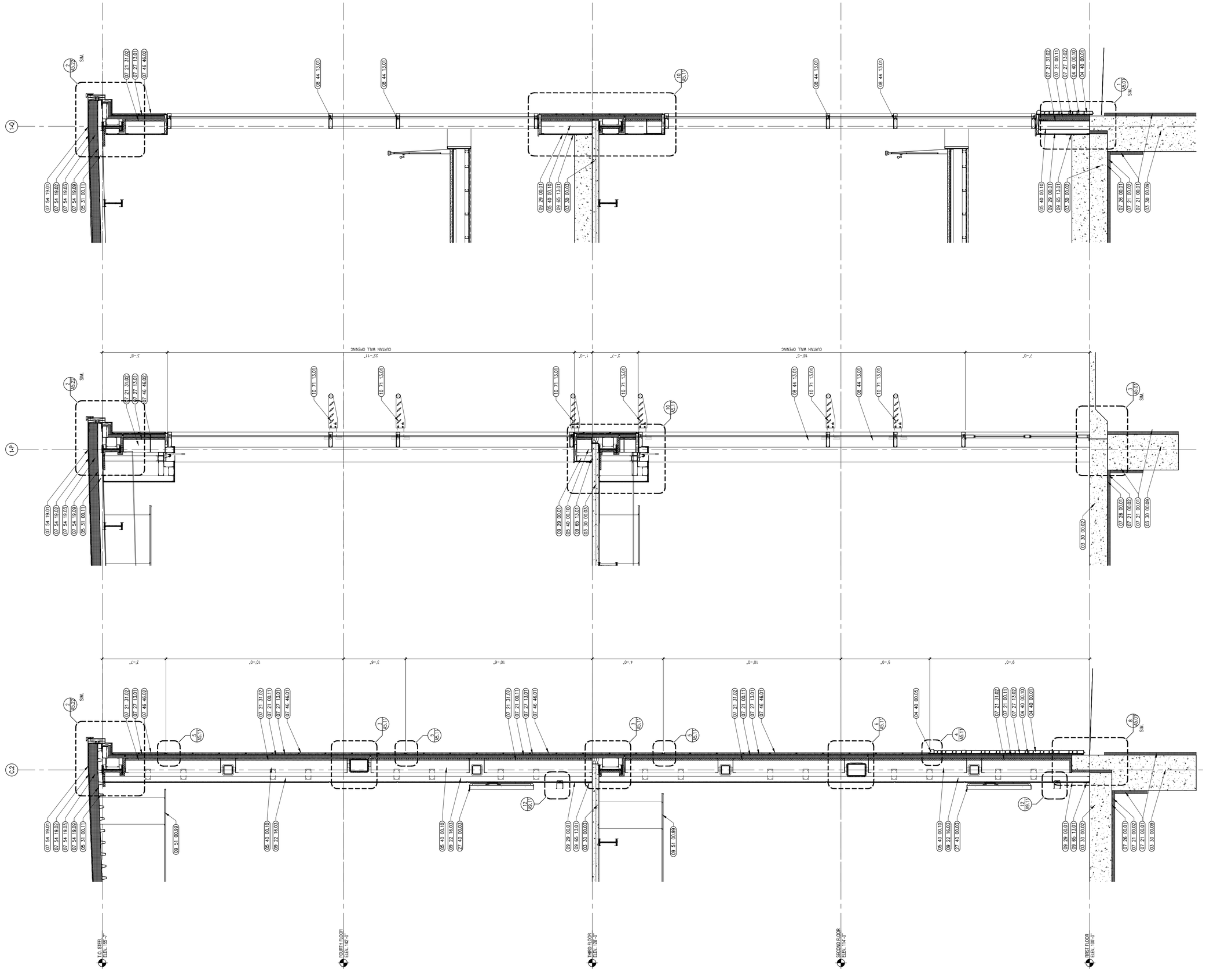

3 WALL SECTION
1/2" = 1'-0"

2 WALL SECTION
1/2" = 1'-0"

1 WALL SECTION
1/2" = 1'-0"

526 Boston Post Rd Wayland, MA
508.358.0790 www.ai3architects.com

BEVERLY MIDDLE SCHOOL

CABOT STREET
BEVERLY, MA 01915

Copyright © 2016 AI3 Architects, LLC

KEYNOTE LEGEND: (REFERENCE SHEETS A0.01 & A0.02 FOR MASTER KEYNOTE LIST AND KEYNOTES NOT LISTED)

03 30 00.02	CONCRETE SLAB ON GRADE – SEE STRUCTURAL
03 30 00.03	CONCRETE SLAB ON DECK – SEE STRUCTURAL
03 30 00.09	CONCRETE GRADE BEAM – SEE STRUCTURAL
04 40 00.01	STONE VENEER
04 40 00.05	STONE SILL
04 40 00.10	GALVANIZED METAL LATH
05 31 00.11	STEEL ROOF DECK – 3 INCH GALVANIZED – SEE STRUCTURAL
05 40 00.10	STEEL STUDS – 10 INCH – 16 INCHES O.C. MAX
07 21 00.01	RIGID INSULATION – 2 INCH – FOUNDATION ONLY
07 21 00.02	RIGID INSULATION – 2 INCH – UNDER SLAB – HIGH COMPRESSIVE STRENGTH
07 21 00.11	INSULATING NAIL BASE – 2 INCH – EXTERIOR WALL
07 21 31.02	FOAM INSULATION – SPRAYED-IN-PLACE – 1-1/2 INCH DEPTH BETWEEN STUDS
07 26 00.01	VAPOR RETARDER – UNDER SLAB
07 27 13.01	AIR/VAPOR BARRIER MEMBRANE – SELF-ADHERING
07 27 13.02	AIR/VAPOR BARRIER MEMBRANE – SELF-ADHERING – 2 LAYERS
07 46 46.01	MINERAL FIBER CEMENT SIDING PANEL
07 46 46.02	MINERAL FIBER CEMENT SMOOTH PANEL
07 54 19.01	PVC SINGLE PLY MEMBRANE ROOFING
07 54 19.02	HIGH DENSITY POLYISO RECOVERY BOARD
07 54 19.03	POLYISO RIGID INSULATION
07 54 19.09	SHEET VAPOR RETARDER – TAPE SEAMS
08 44 13.01	ALUMINUM CURTAIN WALL FRAME
09 22 16.03	METAL STUD 3-5/8 INCH – 16 INCHES O.C. MAX
09 29 00.01	5/8 INCH GYPSUM BOARD – LEVEL 4 FINISH
09 51 00.99	ACOUSTICAL CEILING – REFERENCE REFLECTED CEILING PLANS FOR TYPE AND HEIGHT
09 65 13.01	RUBBER BASE – 4"
10 71 13.01	ALUMINUM SUNSHADE ASSEMBLY
27 40 00.03	VIDEO DISPLAY MONITOR
32 13 13.01	SIDEWALK – SEE CIVIL/LANDSCAPE

90% CONSTRUCTION DOCUMENTS

NOT FOR CONSTRUCTION

NORTH ARROW

KEYPLAN

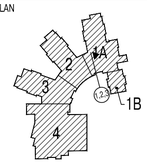

DRAWING NAME:

WALL SECTIONS

DRAWN BY:	RPM
REVIEWED BY:	CLO
SCALE:	As Noted
JOB NO.:	1403.00
DATE:	July 25, 2016
DRAWING NUMBER:	A4.23

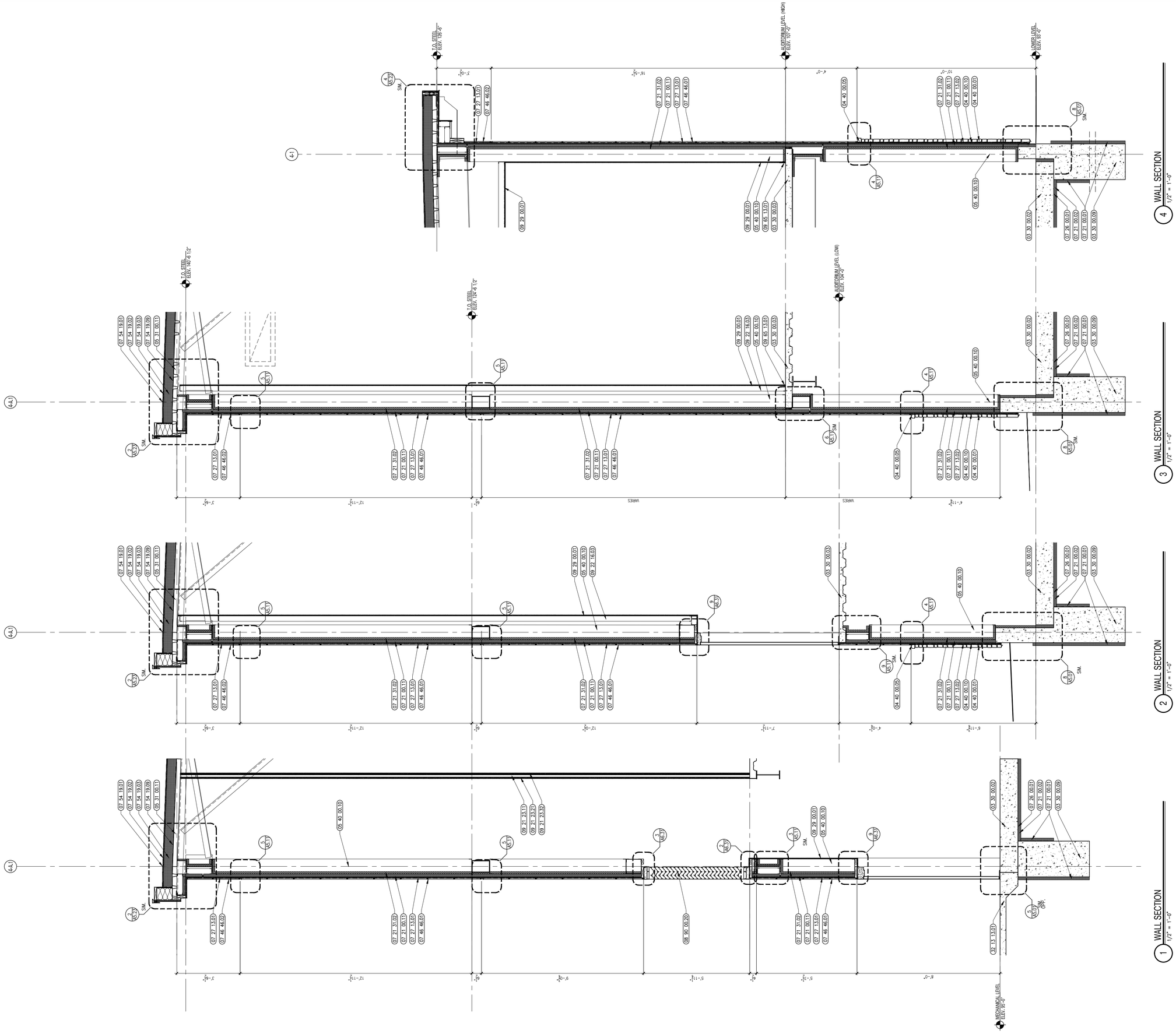

526 Boston Post Rd Wayland, MA
508.358.0790 www.ai3architects.com

BEVERLY MIDDLE SCHOOL

CABOT STREET
BEVERLY, MA 01915

Copyright © 2016 Ai3 Architects, LLC

KEYNOTE LEGEND: (REFERENCE SHEETS A0.01 & A0.02 FOR MASTER KEYNOTE LIST AND KEYNOTES NOT LISTED)

03 30 00.02	CONCRETE SLAB ON GRADE – SEE STRUCTURAL
03 30 00.03	CONCRETE SLAB ON DECK – SEE STRUCTURAL
03 30 00.09	CONCRETE GRADE BEAM – SEE STRUCTURAL
04 40 00.01	STONE VENEER
04 40 00.05	STONE SILL
04 40 00.10	GALVANIZED METAL LATH
05 31 00.11	STEEL ROOF DECK – 3 INCH GALVANIZED – SEE STRUCTURAL
05 40 00.10	STEEL STUDS – 10 INCH – 16 INCHES O.C. MAX
07 21 00.01	RIGID INSULATION – 2 INCH – FOUNDATION ONLY
07 21 00.02	RIGID INSULATION – 2 INCH – UNDER SLAB – HIGH COMPRESSIVE STRENGTH
07 21 00.11	INSULATING NAIL BASE – 2 INCH – EXTERIOR WALL
07 21 31.02	FOAM INSULATION – SPRAYED-IN-PLACE – 1-1/2 INCH DEPTH BETWEEN STUDS
07 26 00.01	VAPOR RETARDER – UNDER SLAB
07 27 13.01	AIR/VAPOR BARRIER MEMBRANE – SELF-ADHERING
07 27 13.02	AIR/VAPOR BARRIER MEMBRANE – SELF-ADHERING – 2 LAYERS
07 46 46.01	MINERAL FIBER CEMENT SIDING PANEL
07 46 46.02	MINERAL FIBER CEMENT SMOOTH PANEL
07 54 19.01	PVC SINGLE PLY MEMBRANE ROOFING
07 54 19.02	HIGH DENSITY POLYISO RECOVERY BOARD
07 54 19.03	POLYISO RIGID INSULATION
07 54 19.09	SHEET VAPOR RETARDER – TAPE SEAMS
08 90 00.20	ALUMINUM LOUVER – SEE ELEVATIONS AND SPECIFICATION
09 21 23.11	METAL SHAFTWALL C-H STUD – 2 1/2 INCH – 24 INCHES O.C. MAX
09 21 23.21	GYPSUM SHAFTWALL LINER PANEL – 1 INCH
09 21 23.32	GYPSUM BOARD – 5/8 INCH TYPE "X" – 2 LAYERS
09 22 16.03	METAL STUD 3-5/8 INCH – 16 INCHES O.C. MAX
09 29 00.01	5/8 INCH GYPSUM BOARD – LEVEL 4 FINISH
09 65 13.01	RUBBER BASE – 4"
32 13 13.01	SIDEWALK – SEE CIVIL/LANDSCAPE

90% CONSTRUCTION DOCUMENTS

NOT FOR CONSTRUCTION

NORTH ARROW

KEYPLAN

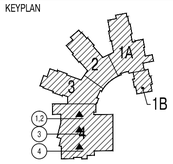

DRAWING NAME:

WALL SECTIONS

DRAWN BY:	RPM
REVIEWED BY:	CLO
SCALE:	As Noted
JOB NO.:	1403.00
DATE:	July 25, 2016
DRAWING NUMBER:	A4.24

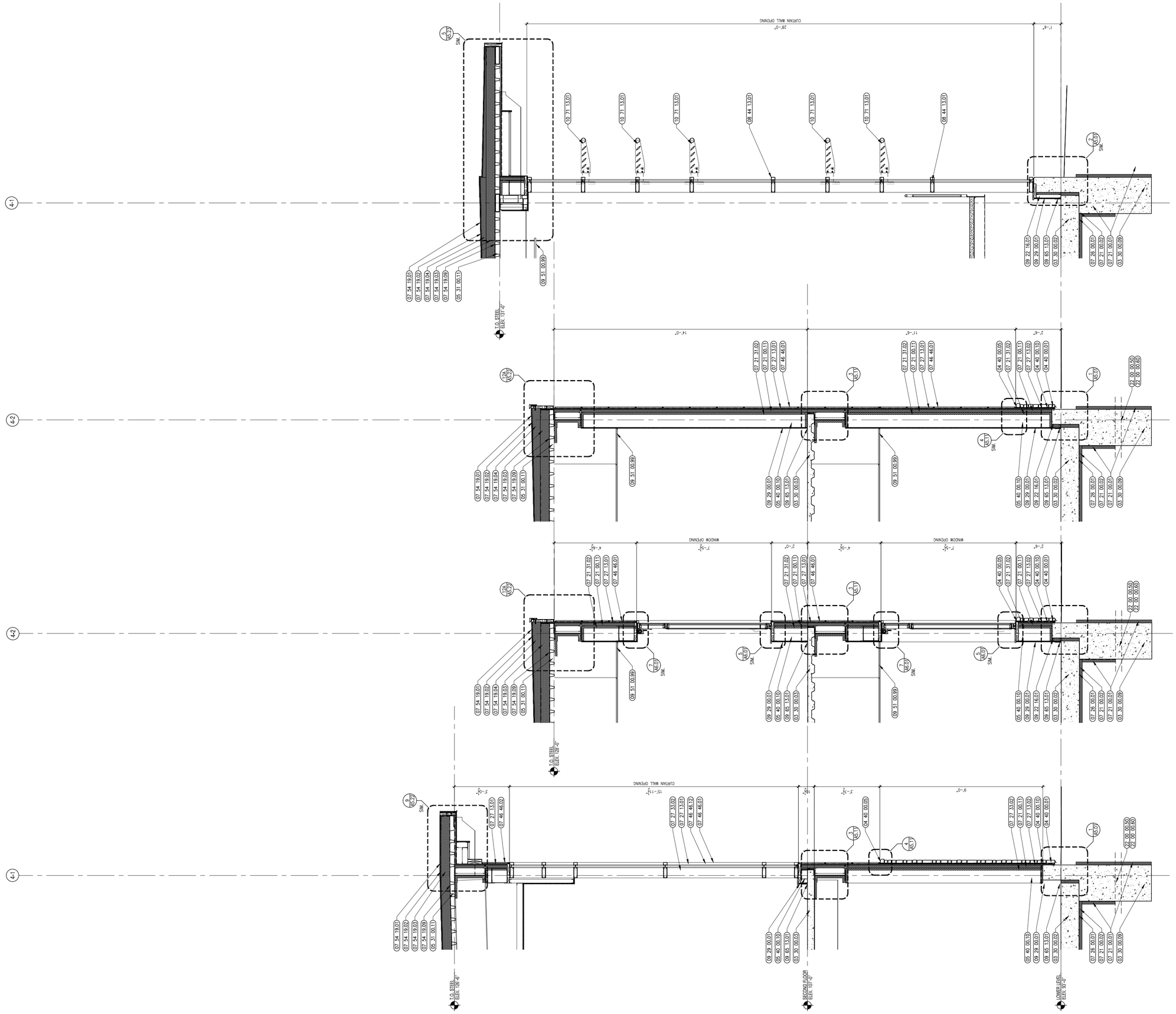

Ai3 architects

526 Boston Post Rd Wayland, MA
508.358.0790 www.ai3architects.com

BEVERLY MIDDLE SCHOOL

CABOT STREET
BEVERLY, MA 01915

Copyright © 2016 Ai3 Architects, LLC

KEYNOTE LEGEND: (REFERENCE SHEETS A0.01 & A0.02 FOR MASTER KEYNOTE LIST AND KEYNOTES NOT LISTED)

03 30 00.02	CONCRETE SLAB ON GRADE – SEE STRUCTURAL
03 30 00.03	CONCRETE SLAB ON DECK – SEE STRUCTURAL
03 30 00.09	CONCRETE GRADE BEAM – SEE STRUCTURAL
04 40 00.01	STONE VENEER
04 40 00.05	STONE SILL
04 40 00.10	GALVANIZED METAL LATH
05 31 00.11	STEEL ROOF DECK – 3 INCH GALVANIZED – SEE STRUCTURAL
05 40 00.10	STEEL STUDS – 10 INCH – 16 INCHES O.C. MAX
07 21 00.01	RIGID INSULATION – 2 INCH – FOUNDATION ONLY
07 21 00.02	RIGID INSULATION – 2 INCH – UNDER SLAB – HIGH COMPRESSIVE STRENGTH
07 21 00.11	INSULATING NAIL BASE – 2 INCH – EXTERIOR WALL
07 21 31.02	FOAM INSULATION – SPRAYED–IN–PLACE – 1–1/2 INCH DEPTH BETWEEN STUDS
07 26 00.01	VAPOR RETARDER – UNDER SLAB
07 27 13.01	AIR/VAPOR BARRIER MEMBRANE – SELF–ADHERING
07 27 13.02	AIR/VAPOR BARRIER MEMBRANE – SELF–ADHERING – 2 LAYERS
07 27 33.02	FOAM INSULATION – SPRAYED–IN–PLACE – 1–1/2 INCH DEPTH BETWEEN STUDS
07 46 46.01	MINERAL FIBER CEMENT SIDING PANEL
07 46 46.02	MINERAL FIBER CEMENT SMOOTH PANEL
07 46 46.12	CLIP
07 54 19.01	PVC SINGLE PLY MEMBRANE ROOFING
07 54 19.02	HIGH DENSITY POLYISO RECOVERY BOARD
07 54 19.03	POLYISO RIGID INSULATION
07 54 19.04	POLYISO TAPERED INSULATION
07 54 19.09	SHEET VAPOR RETARDER – TAPE SEAMS
08 44 13.01	ALUMINUM CURTAIN WALL FRAME
09 22 16.01	METAL STUD 1–5/8 INCH – 16 INCHES O.C. MAX
09 29 00.01	5/8 INCH GYPSUM BOARD – LEVEL 4 FINISH
09 51 00.99	ACOUSTICAL CEILING – REFERENCE REFLECTED CEILING PLANS FOR TYPE AND HEIGHT
09 65 13.01	RUBBER BASE – 4"
10 71 13.01	ALUMINUM SUNSHADE ASSEMBLY
22 00 00.50	PIPE PENETRATION – SEE PLUMBING
22 00 00.60	PIPE – SEE PLUMBING

90% CONSTRUCTION DOCUMENTS

NOT FOR CONSTRUCTION

NORTH ARROW

KEYPLAN

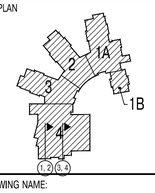

DRAWING NAME:

WALL SECTIONS

DRAWN BY:	RPM
REVIEWED BY:	CLO
SCALE:	As Noted
JOB NO.:	1403.00
DATE:	July 25, 2016
DRAWING NUMBER:	A4.25

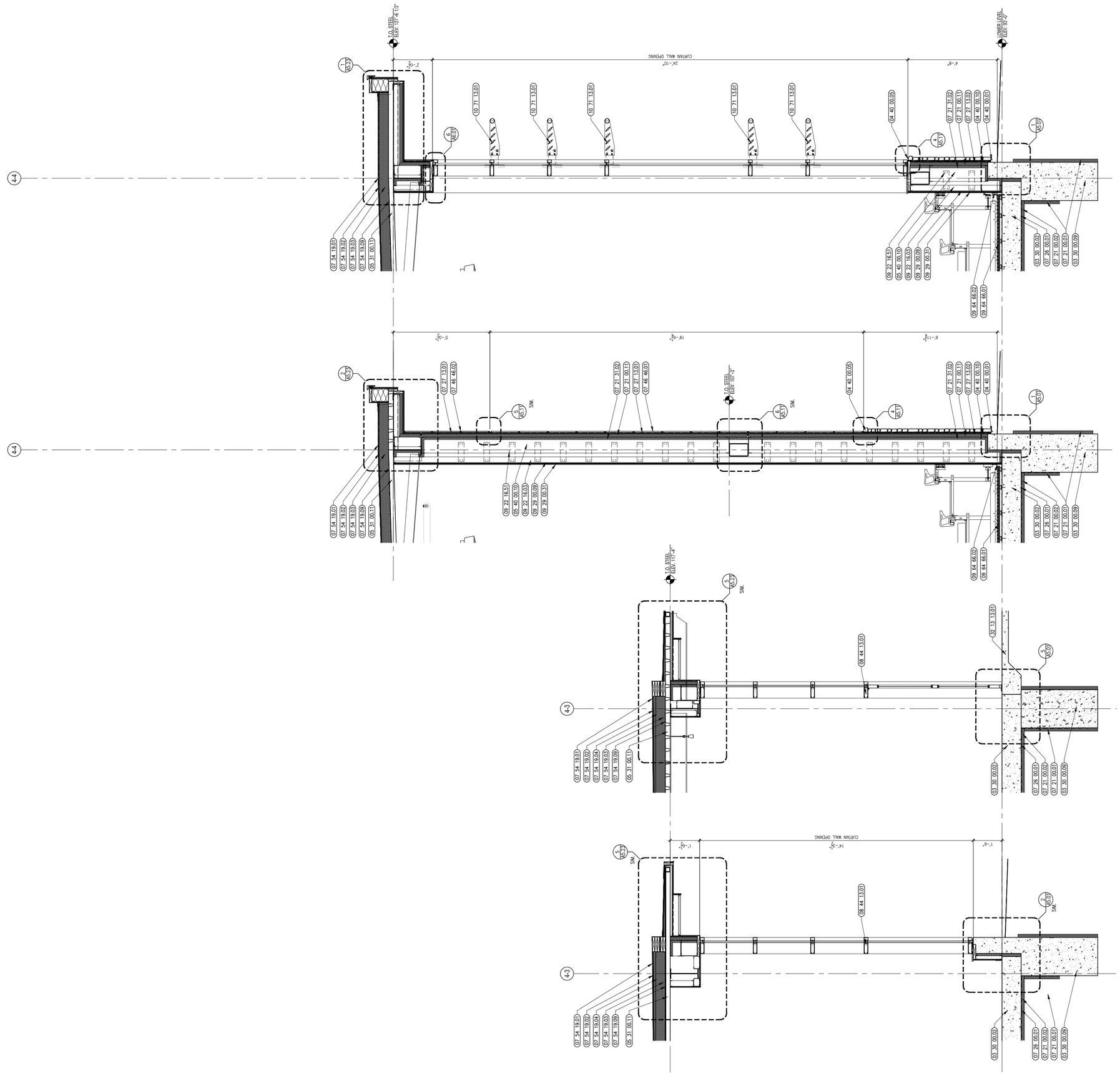

4 WALL SECTION 1/2" = 1'-0"

3 WALL SECTION 1/2" = 1'-0"

2 WALL SECTION 1/2" = 1'-0"

1 WALL SECTION 1/2" = 1'-0"

A13 architects

526 Boston Post Rd Wayland, MA
508.358.0790 www.a13architects.com

BEVERLY MIDDLE SCHOOL

CABOT STREET
BEVERLY, MA 01915

Copyright © 2016 A13 Architects, LLC

KEYNOTE LEGEND: (REFERENCE SHEETS A0.01 & A0.02 FOR MASTER KEYNOTE LIST AND KEYNOTES NOT LISTED)

03 30 00.02	CONCRETE SLAB ON GRADE – SEE STRUCTURAL
03 30 00.09	CONCRETE GRADE BEAM – SEE STRUCTURAL
04 40 00.01	STONE VENEER
04 40 00.05	STONE SILL
04 40 00.10	GALVANIZED METAL LATH
05 31 00.11	STEEL ROOF DECK – 3 INCH GALVANIZED – SEE STRUCTURAL
05 40 00.10	STEEL STUDS – 10 INCH – 16 INCHES O.C. MAX
07 21 00.01	RIGID INSULATION – 2 INCH – FOUNDATION ONLY
07 21 00.02	RIGID INSULATION – 2 INCH – UNDER SLAB – HIGH COMPRESSIVE STRENGTH
07 21 00.11	INSULATING NAIL BASE – 2 INCH – EXTERIOR WALL
07 21 31.02	FOAM INSULATION – SPRAYED–IN–PLACE – 1–1/2 INCH DEPTH BETWEEN STUDS
07 26 00.01	VAPOR RETARDER – UNDER SLAB
07 27 13.01	AIR/VAPOR BARRIER MEMBRANE – SELF–ADHERING
07 27 13.02	AIR/VAPOR BARRIER MEMBRANE – SELF–ADHERING – 2 LAYERS
07 46 46.01	MINERAL FIBER CEMENT SIDING PANEL
07 46 46.02	MINERAL FIBER CEMENT SMOOTH PANEL
07 54 19.01	PVC SINGLE PLY MEMBRANE ROOFING
07 54 19.02	HIGH DENSITY POLYISO RECOVERY BOARD
07 54 19.03	POLYISO RIGID INSULATION
07 54 19.04	POLYISO TAPERED INSULATION
07 54 19.09	SHEET VAPOR RETARDER – TAPE SEAMS
08 44 13.01	ALUMINUM CURTAIN WALL FRAME
09 22 16.03	METAL STUD 3–5/8 INCH – 16 INCHES O.C. MAX
09 22 16.51	METAL STUD BRACE
09 29 00.09	1/2 INCH PLYWOOD – FIRE RETARDANT TREATED
09 29 00.31	5/8 INCH GYPSUM BOARD – IMPACT RESISTANT – LEVEL 4 FINISH
09 64 66.01	WOOD ATHLETIC FLOOR
09 64 66.02	RUBBER COVE WALL BASE – VENTED
10 71 13.01	ALUMINUM SUNSHADE ASSEMBLY
32 13 13.01	SIDEWALK – SEE CIVIL/LANDSCAPE

90% CONSTRUCTION DOCUMENTS

NOT FOR CONSTRUCTION

NORTH ARROW

KEYPLAN

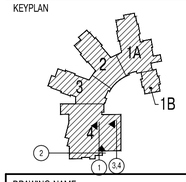

DRAWING NAME:

WALL SECTIONS

DRAWN BY:	RPM
REVIEWED BY:	CLO
SCALE:	As Noted
JOB NO.:	1403.00
DATE:	July 25, 2016
DRAWING NUMBER:	A4.26

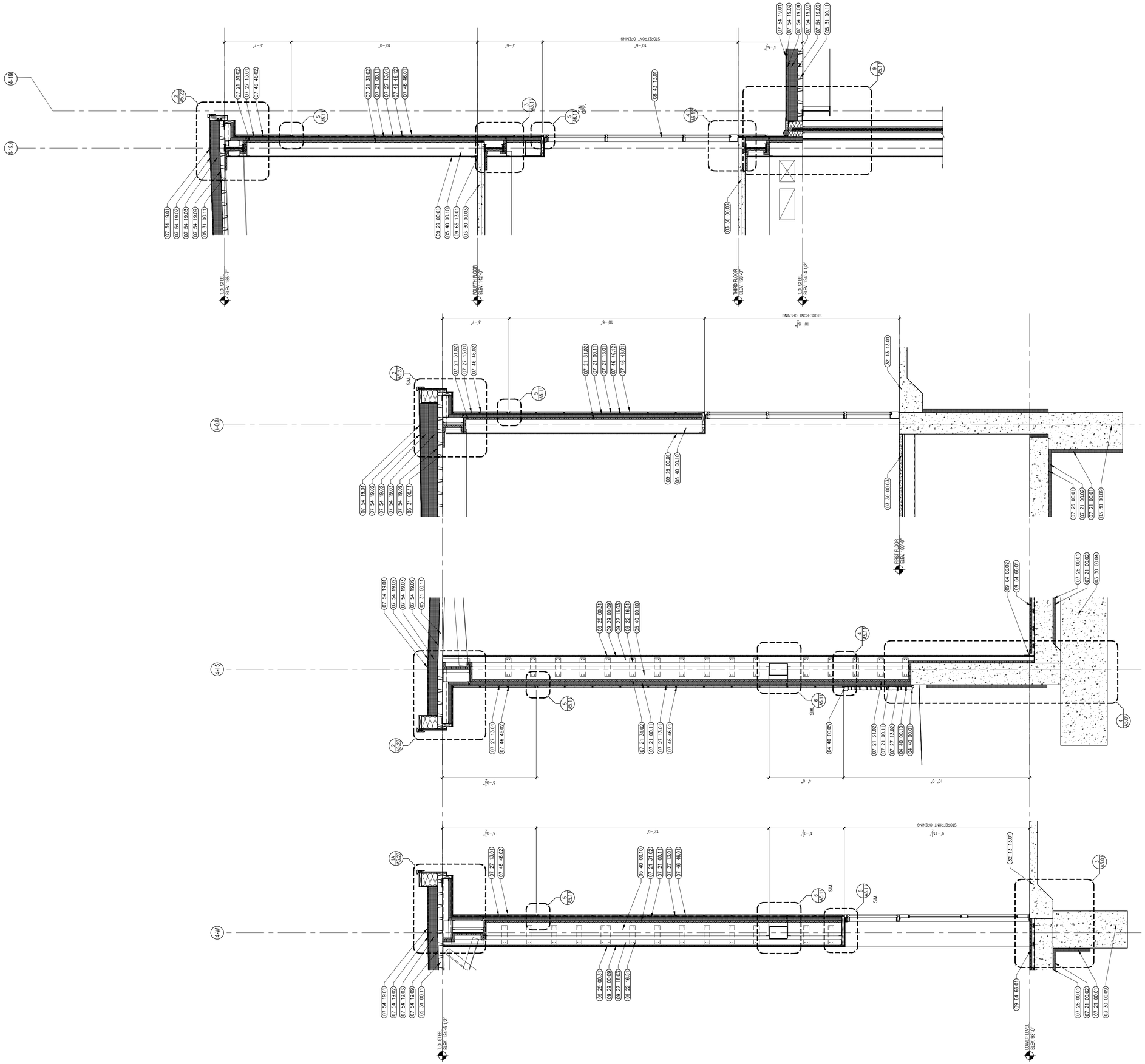

Ai3 architects
526 Boston Post Rd Wayland, MA
508.358.0790 www.ai3architects.com

BEVERLY MIDDLE SCHOOL

CABOT STREET
BEVERLY, MA 01915

Copyright © 2016 Ai3 Architects, LLC

KEYNOTE LEGEND: (REFERENCE SHEETS A0.01 & A0.02 FOR MASTER KEYNOTE LIST AND KEYNOTES NOT LISTED)

03 30 00.03	CONCRETE SLAB ON DECK – SEE STRUCTURAL
03 30 00.04	CONCRETE FOOTING – SEE STRUCTURAL
03 30 00.09	CONCRETE GRADE BEAM – SEE STRUCTURAL
04 40 00.01	STONE VENEER
04 40 00.05	STONE SILL
04 40 00.10	GALVANIZED METAL LATH
05 31 00.11	STEEL ROOF DECK – 3 INCH GALVANIZED – SEE STRUCTURAL
05 40 00.10	STEEL STUDS – 10 INCH – 16 INCHES O.C. MAX
07 21 00.01	RIGID INSULATION – 2 INCH – FOUNDATION ONLY
07 21 00.02	RIGID INSULATION – 2 INCH – UNDER SLAB – HIGH COMPRESSIVE STRENGTH
07 21 00.11	INSULATING NAIL BASE – 2 INCH – EXTERIOR WALL
07 21 31.02	FOAM INSULATION – SPRAYED-IN-PLACE – 1-1/2 INCH DEPTH BETWEEN STUDS
07 26 00.01	VAPOR RETARDER – UNDER SLAB
07 27 13.01	AIR/VAPOR BARRIER MEMBRANE – SELF-ADHERING
07 27 13.02	AIR/VAPOR BARRIER MEMBRANE – SELF-ADHERING – 2 LAYERS
07 46 46.01	MINERAL FIBER CEMENT SIDING PANEL
07 46 46.02	MINERAL FIBER CEMENT SMOOTH PANEL
07 46 46.12	CLIP
07 54 19.01	PVC SINGLE PLY MEMBRANE ROOFING
07 54 19.02	HIGH DENSITY POLYISO RECOVERY BOARD
07 54 19.03	POLYISO RIGID INSULATION
07 54 19.04	POLYISO TAPERED INSULATION
07 54 19.09	SHEET VAPOR RETARDER – TAPE SEAMS
08 43 13.01	ALUMINUM STOREFRONT FRAME
09 22 16.03	METAL STUD 3-5/8 INCH – 16 INCHES O.C. MAX
09 22 16.51	METAL STUD BRACE
09 29 00.01	5/8 INCH GYPSUM BOARD – LEVEL 4 FINISH
09 29 00.09	1/2 INCH PLYWOOD – FIRE RETARDANT TREATED
09 29 00.31	5/8 INCH GYPSUM BOARD – IMPACT RESISTANT – LEVEL 4 FINISH
09 64 66.01	WOOD ATHLETIC FLOOR
09 64 66.02	RUBBER COVE WALL BASE – VENTED
09 65 13.01	RUBBER BASE – 4"
32 13 13.01	SIDEWALK – SEE CIVIL/LANDSCAPE

90% CONSTRUCTION DOCUMENTS

NOT FOR CONSTRUCTION

NORTH ARROW

KEYPLAN

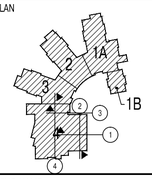

DRAWING NAME:

WALL SECTIONS

DRAWN BY:	RPM
REVIEWED BY:	CLO
SCALE:	As Noted
JOB NO.:	1403.00
DATE:	July 25, 2016
DRAWING NUMBER:	A4.27

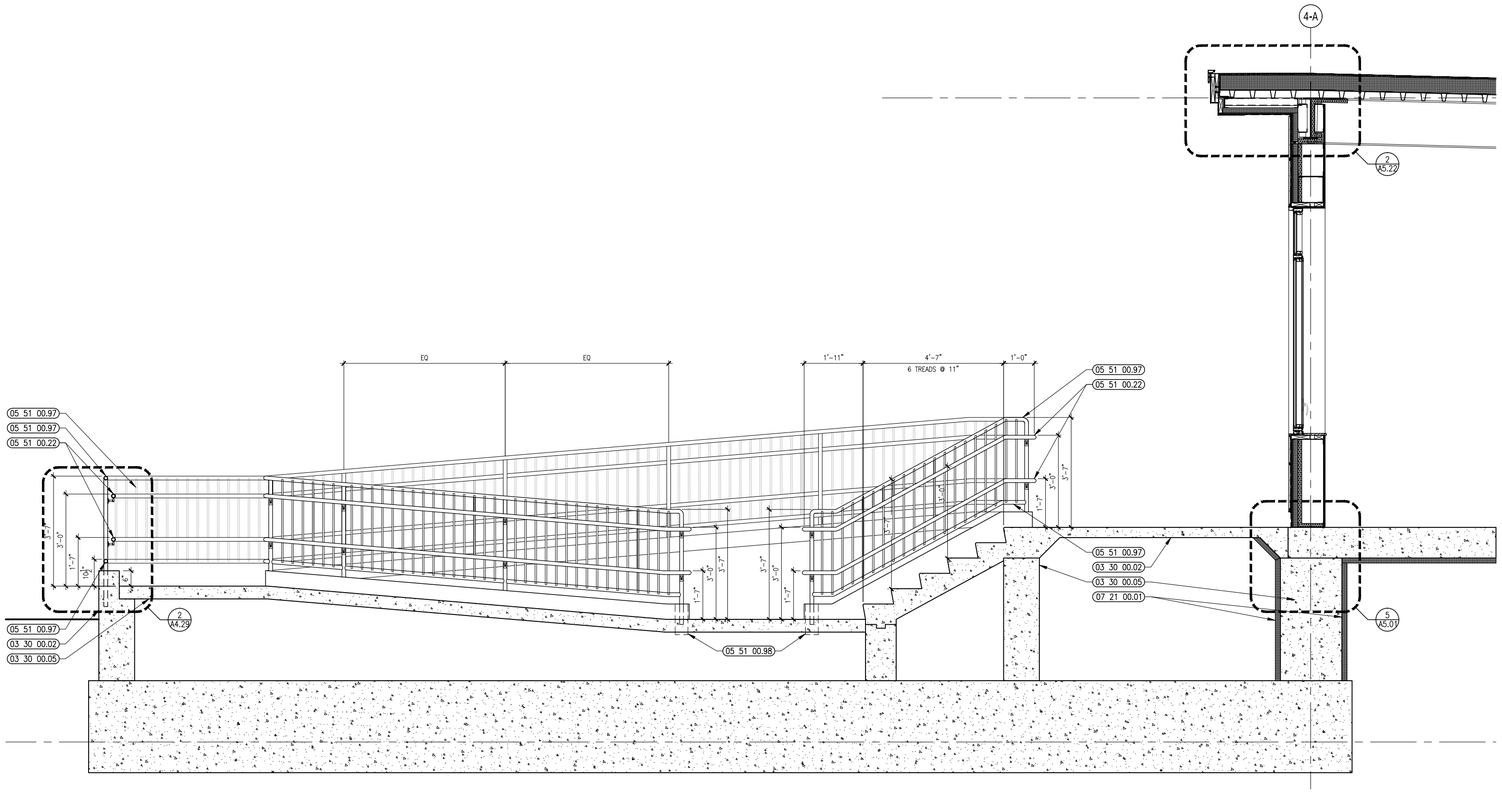

4 DOCK DETAILED SECTION
1/2" = 1'-0"

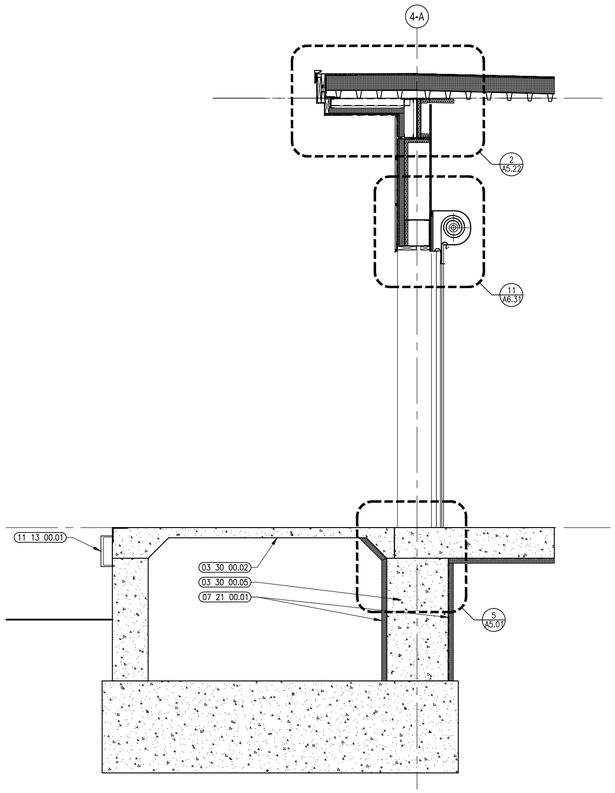

3 DOCK DETAILED SECTION
1/2" = 1'-0"

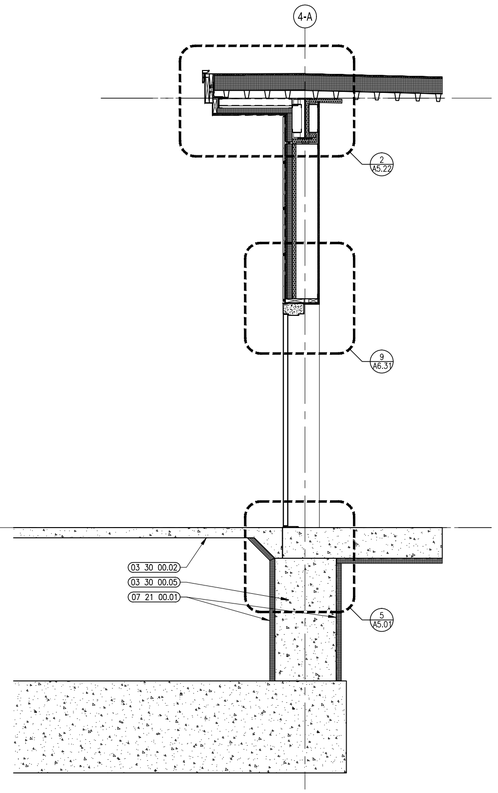

2 DOCK DETAILED SECTION
1/2" = 1'-0"

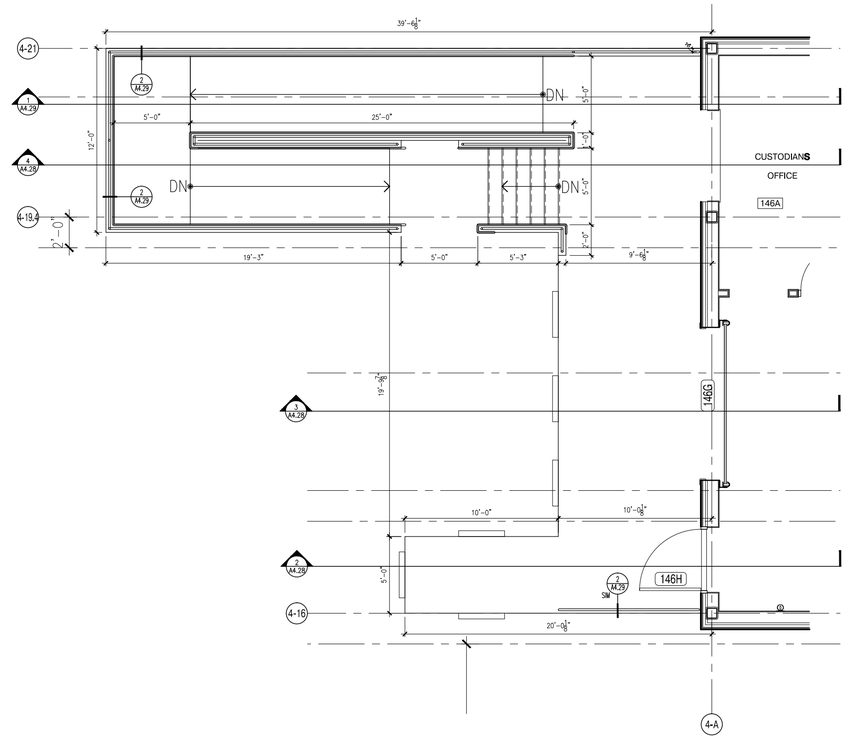

1 ENLARGED PLAN
1/4" = 1'-0"

architects
526 Boston Post Rd Wayland, MA
508.358.0790 www.ai3architects.com

BEVERLY MIDDLE SCHOOL

CABOT STREET
BEVERLY, MA 01915

KEYNOTE LEGEND: (REFERENCE SHEETS A0.01 & A0.02 FOR MASTER KEYNOTE LIST AND KEYNOTES NOT LISTED)

Copyright © 2016 Ai3 Architects, LLC

90% CONSTRUCTION DOCUMENTS

NOT FOR CONSTRUCTION

NORTH ARROW

KEYPLAN

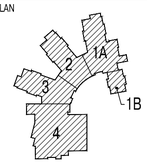

DRAWING NAME:

WALL SECTIONS

DRAWN BY:	CRL
REVIEWED BY:	CLO
SCALE:	As Noted
JOB NO.:	1403.00
DATE:	July 25, 2016
DRAWING NUMBER:	A4.28

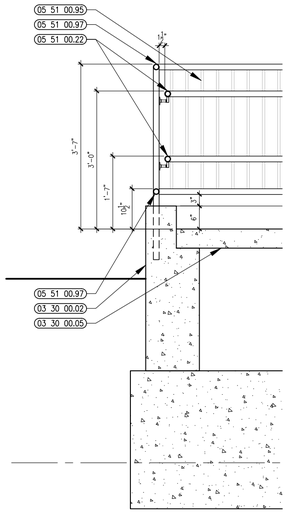

2 HAND RAIL DETAIL
3/4" = 1'-0"

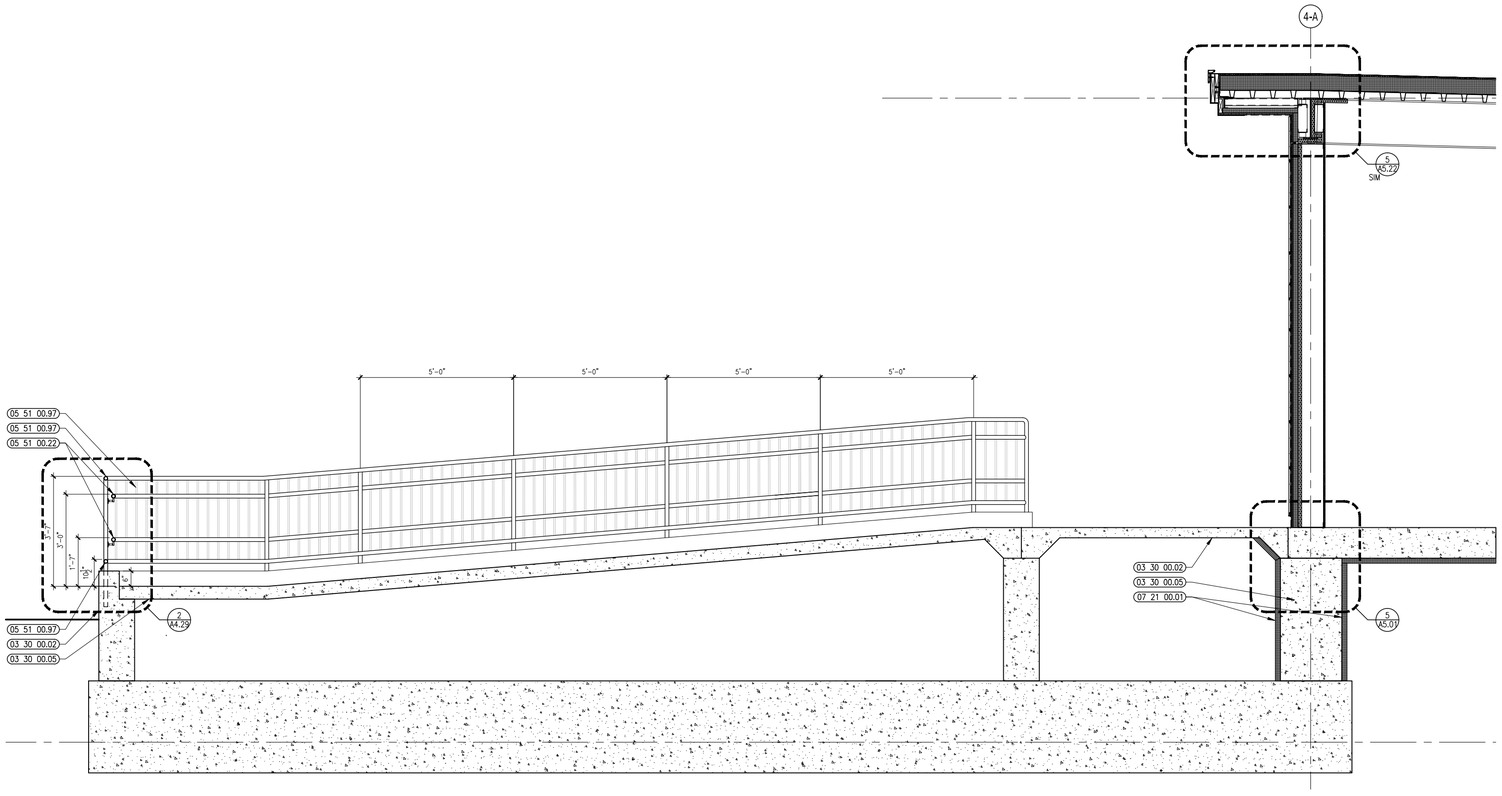

1 DOCK DETAILED SECTION
1/2" = 1'-0"

A13 architects
526 Boston Post Rd Wayland, MA
508.358.0790 www.a13architects.com

Copyright © 2016 A13 Architects, LLC

BEVERLY MIDDLE SCHOOL

CABOT STREET
BEVERLY, MA 01915

KEYNOTE LEGEND: (REFERENCE SHEETS A0.01 & A0.02 FOR MASTER KEYNOTE LIST AND KEYNOTES NOT LISTED)

90% CONSTRUCTION DOCUMENTS

NOT FOR CONSTRUCTION

NORTH ARROW

KEYPLAN

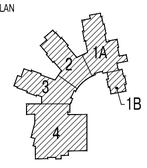

DRAWING NAME:

WALL SECTIONS

DRAWN BY:	CRL
REVIEWED BY:	CLO
SCALE:	As Noted
JOB NO.:	1403.00
DATE:	July 25, 2016
DRAWING NUMBER:	A4.29

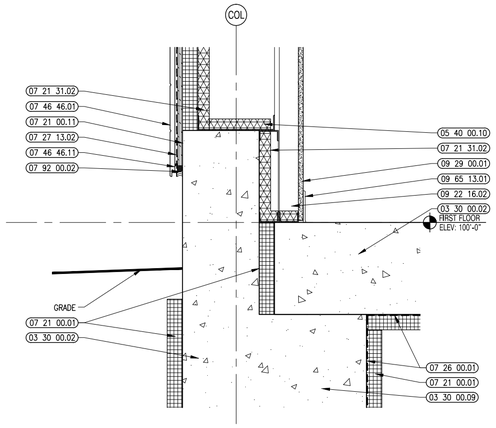

8 VERTICAL BASE DETAIL
1 1/2" = 1'-0"

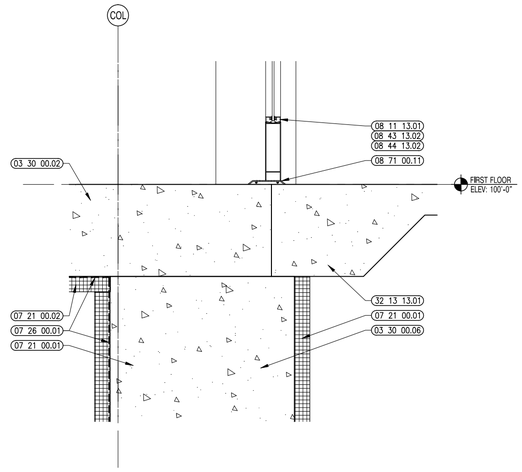

5 VERTICAL BASE DETAIL
1 1/2" = 1'-0"

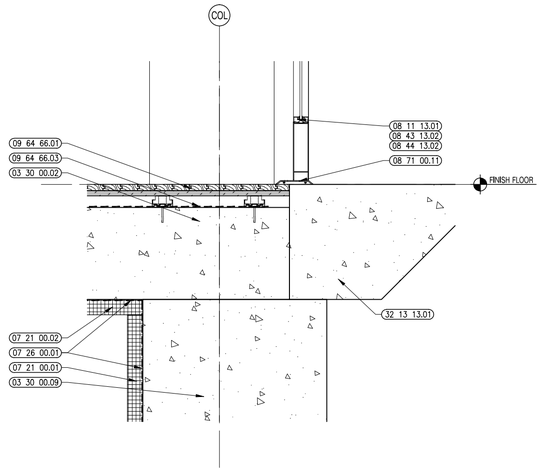

3 VERTICAL BASE DETAIL
1 1/2" = 1'-0"

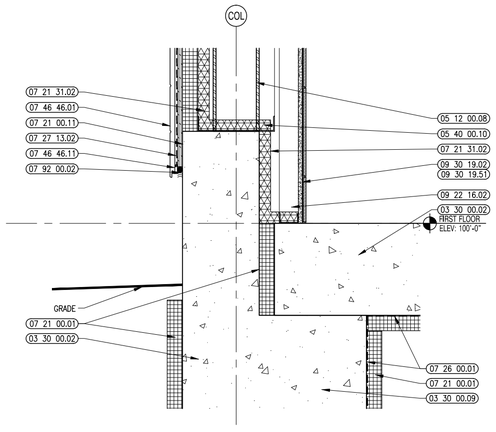

7 VERTICAL BASE DETAIL
1 1/2" = 1'-0"

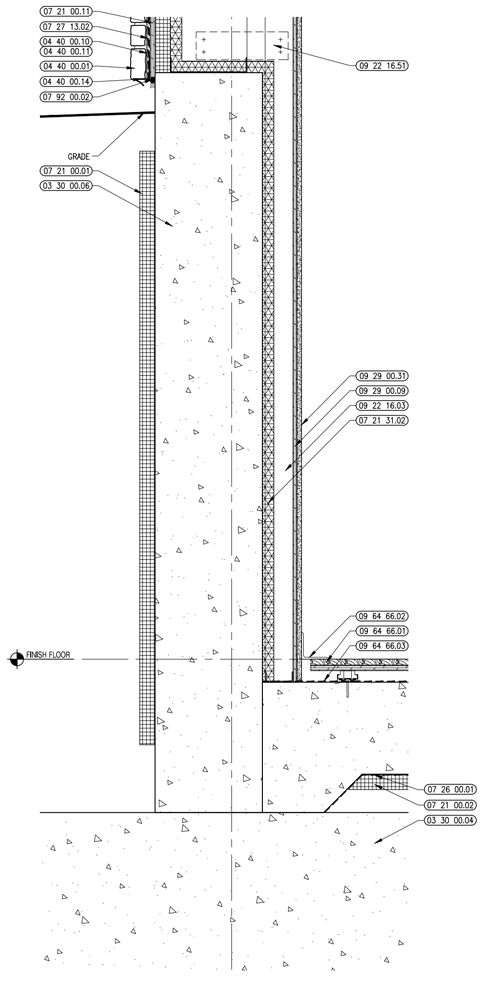

4 VERTICAL BASE DETAIL
1 1/2" = 1'-0"

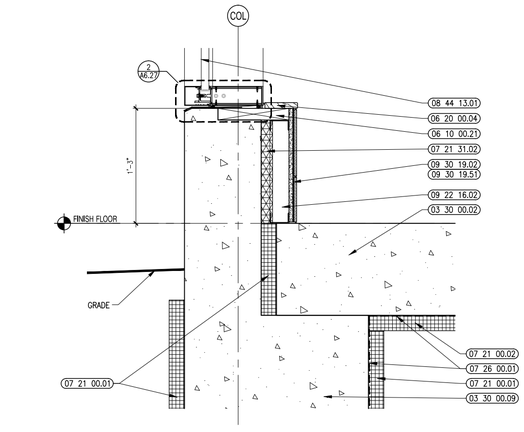

2 VERTICAL BASE DETAIL
1 1/2" = 1'-0"

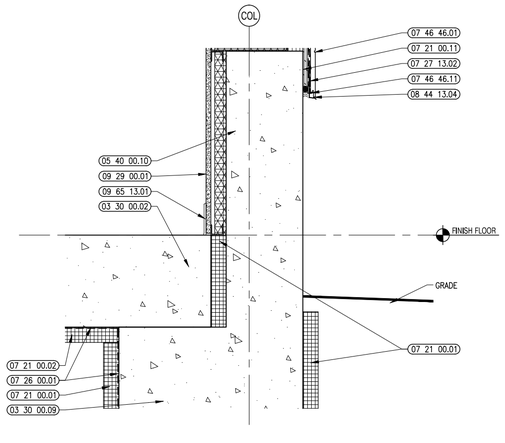

6 VERTICAL BASE DETAIL
1 1/2" = 1'-0"

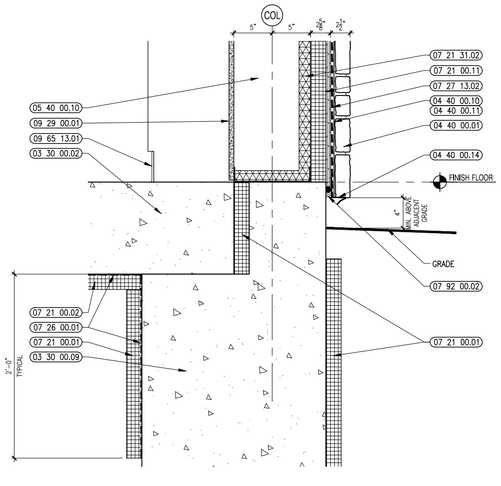

1 VERTICAL BASE DETAIL
1 1/2" = 1'-0"

A13 architects
526 Boston Post Rd Wayland, MA
508.358.0790 www.a13architects.com

BEVERLY MIDDLE SCHOOL

CABOT STREET
BEVERLY, MA 01915

Copyright © 2016 A13 Architects, LLC

KEYNOTE LEGEND: (REFERENCE SHEETS A0.01 & A0.02 FOR MASTER KEYNOTE LIST AND KEYNOTES NOT LISTED)

03 30 00.02	CONCRETE SLAB ON GRADE – SEE STRUCTURAL
03 30 00.04	CONCRETE FOOTING – SEE STRUCTURAL
03 30 00.06	CONCRETE WALL – SEE STRUCTURAL
03 30 00.09	CONCRETE GRADE BEAM – SEE STRUCTURAL
04 40 00.01	STONE VENEER
04 40 00.10	GALVANIZED METAL LATH
04 40 00.11	SCRATCH COAT
04 40 00.14	MEEP SCREED
05 12 00.08	STEEL TUBE COLUMN – SEE STRUCTURAL
05 40 00.10	STEEL STUDS – 10 INCH – 16 INCHES O.C. MAX
06 10 00.21	WOOD BLOCKING – 2X FIRE RETARDANT TREATED – SIZE AS NOTED OR DRAWN
06 20 00.04	HARDWOOD SILL – 3/4 INCH – 1/4 INCH RADIUS EASED EDGE – TRANSPARENT FINISH
07 21 00.01	RIGID INSULATION – 2 INCH – FOUNDATION ONLY
07 21 00.02	RIGID INSULATION – 2 INCH – UNDER SLAB – HIGH COMPRESSIVE STRENGTH
07 21 00.11	INSULATING NAIL BASE – 2 INCH – EXTERIOR WALL
07 21 31.02	FOAM INSULATION – SPRAYED-IN-PLACE – 1-1/2 INCH DEPTH BETWEEN STUDS
07 26 00.01	VAPOR RETARDER – UNDER SLAB
07 27 13.02	AIR/VAPOR BARRIER MEMBRANE – SELF-ADHERING – 2 LAYERS
07 46 46.01	MINERAL FIBER CEMENT SIDING PANEL
07 46 46.11	STARTER TRACK/STRIP
07 92 00.02	BACKER ROD AND SEALANT – TYPE AS REQUIRED
08 11 13.01	CONCRETE SLAB ON GRADE – SEE STRUCTURAL
08 43 13.02	ALUMINUM ENTRANCE DOOR
08 44 13.01	ALUMINUM CURTAIN WALL FRAME
08 44 13.02	ALUMINUM ENTRANCE DOOR
08 44 13.04	BEAD OF SEALANT– CONTINUOUS– SET PREFINISHED ALUMINUM FLASHING IN SEALANT
08 71 00.11	ALUMINUM THRESHOLD
09 22 16.02	METAL STUD 2-1/2 INCH – 16 INCHES O.C. MAX
09 22 16.03	METAL STUD 3-5/8 INCH – 16 INCHES O.C. MAX
09 22 16.51	METAL STUD BRACE
09 29 00.01	5/8 INCH GYPSUM BOARD – LEVEL 4 FINISH
09 29 00.09	1/2 INCH PLYWOOD – FIRE RETARDANT TREATED
09 29 00.31	5/8 INCH GYPSUM BOARD – IMPACT RESISTANT – LEVEL 4 FINISH
09 30 19.02	PORCELAIN WALL TILE
09 30 19.51	CEMENTITIOUS BACKING BOARD
09 64 66.01	WOOD ATHLETIC FLOOR
09 64 66.02	RUBBER COVE WALL BASE – VENTED
09 64 66.03	VAPOR RETARDER
09 65 13.01	RUBBER BASE – 4"
32 13 13.01	ALUMINUM THRESHOLD

90% CONSTRUCTION DOCUMENTS

NOT FOR CONSTRUCTION

NORTH ARROW

KEYPLAN

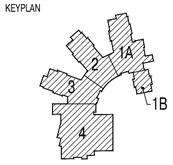

DRAWING NAME:

VERTICAL BASE DETAILS

DRAWN BY:	RPM
REVIEWED BY:	CLO
SCALE:	As Noted
JOB NO.:	1403.00
DATE:	July 25, 2016
DRAWING NUMBER:	A5.01

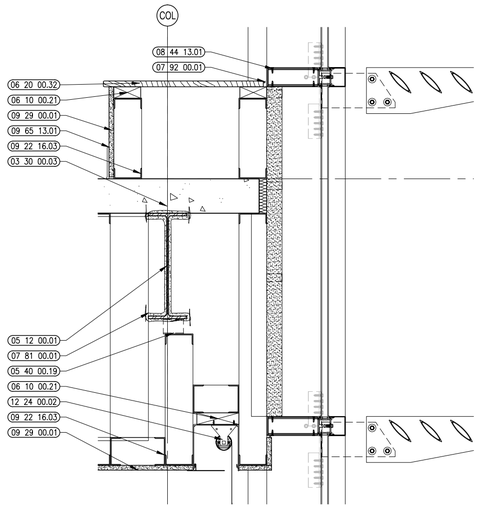

10 VERTICAL WALL DETAIL
1-1/2" = 1'-0"

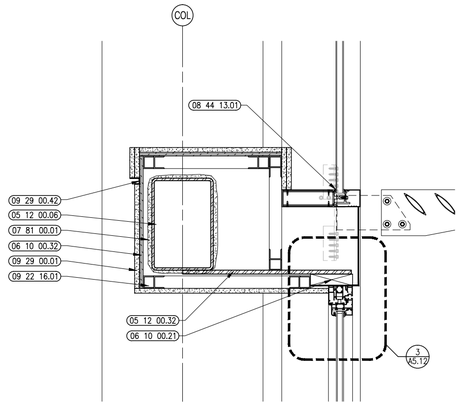

8 VERTICAL WALL DETAIL
1-1/2" = 1'-0"

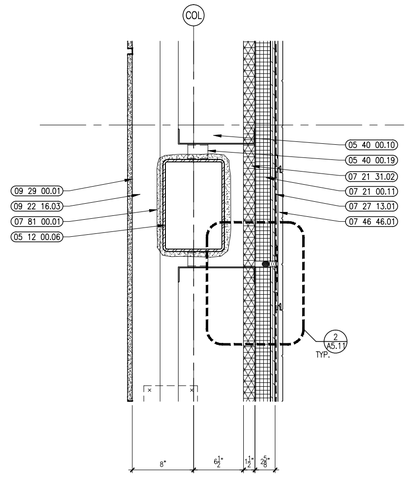

6 VERTICAL WALL DETAIL
1 1/2" = 1'-0"

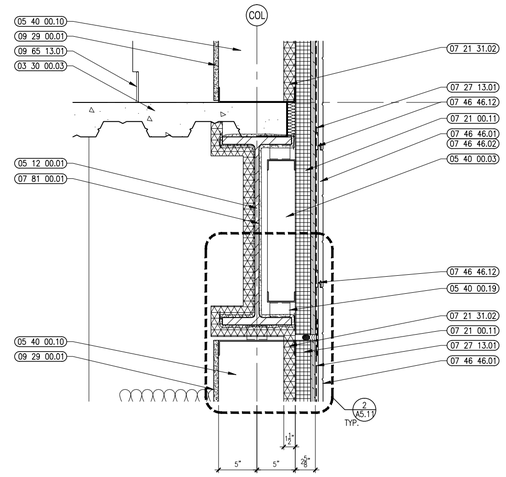

3 VERTICAL WALL DETAIL
1 1/2" = 1'-0"

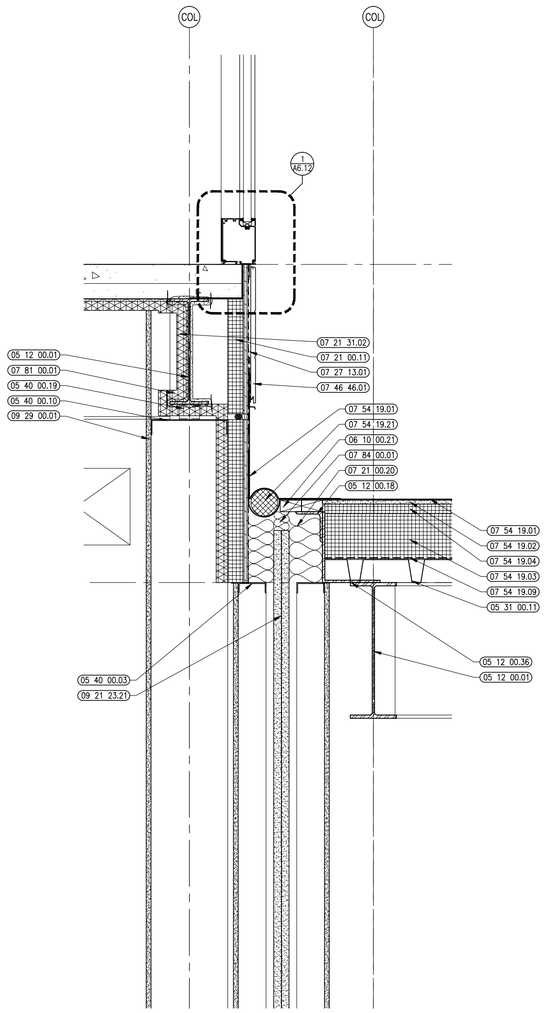

9 VERTICAL WALL DETAIL
1-1/2" = 1'-0"

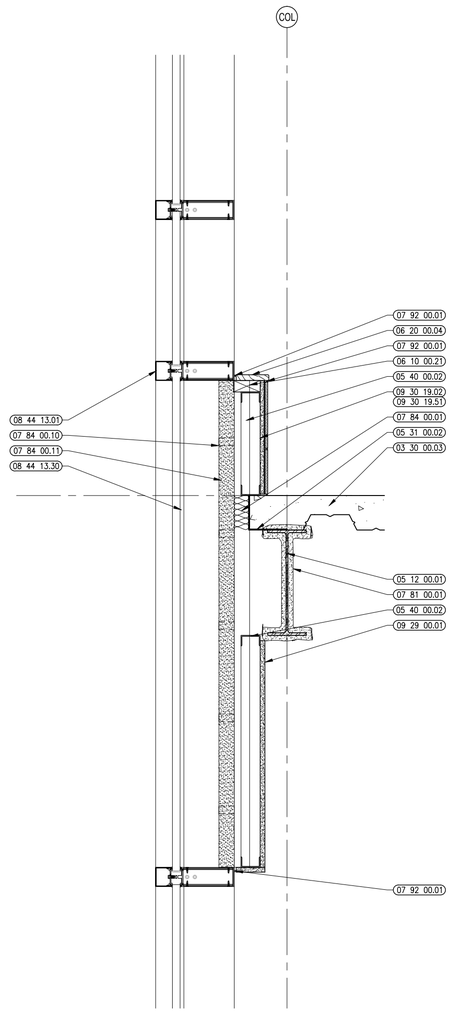

7 VERTICAL WALL DETAIL
1-1/2" = 1'-0"

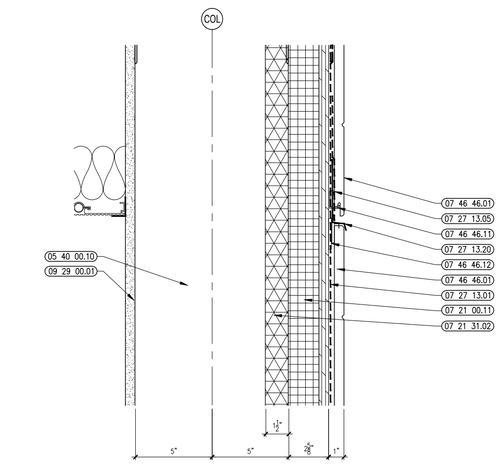

5 VERTICAL WALL DETAIL
3" = 1'-0"

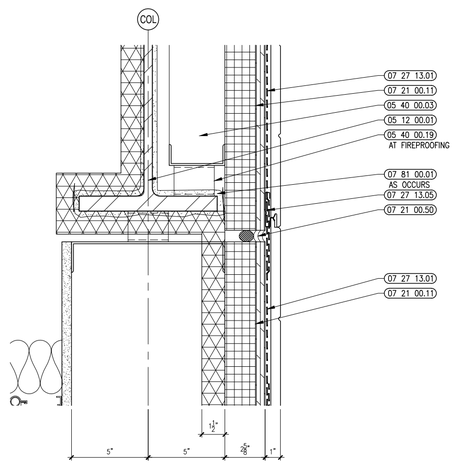

2 TYPICAL DETAIL AT HORIZONTAL DEFLECTION JOINT
3" = 1'-0" REFER TO MFR. REQUIREMENTS FOR ADDITIONAL INFO

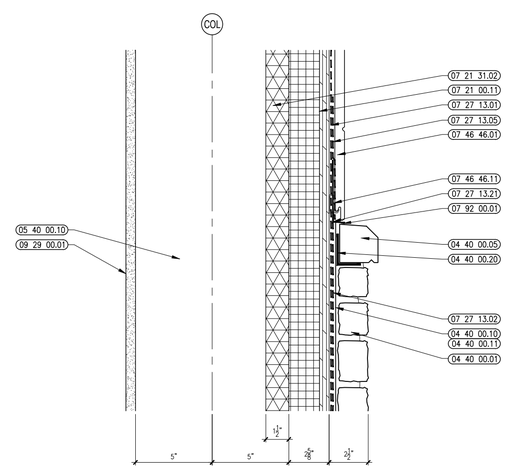

4 VERTICAL WALL DETAIL
3" = 1'-0"

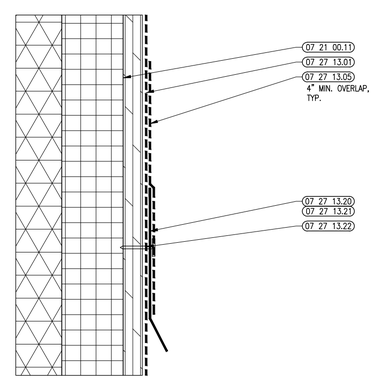

1 TYPICAL AVB/FLASHING LAP DETAIL
6" = 1'-0" REFER TO MFR. REQUIREMENTS FOR ADDITIONAL INFO

Ai3 architects
526 Boston Post Rd Wayland, MA
508.358.0790 www.ai3architects.com

BEVERLY MIDDLE SCHOOL

CABOT STREET
BEVERLY, MA 01915

Copyright © 2016 Ai3 Architects, LLC

KEYNOTE LEGEND: (REFERENCE SHEETS A0.01 & A0.02 FOR MASTER KEYNOTE LIST AND KEYNOTES NOT LISTED)

03 30 00.03	CONCRETE SLAB ON DECK – SEE STRUCTURAL
04 40 00.01	STONE VENEER
04 40 00.05	STONE SILL
04 40 00.10	GALVANIZED METAL LATH
04 40 00.11	SCRATCH COAT
04 40 00.20	STONE SILL SUPPORT CLIP/BRACKET
05 12 00.01	STEEL BEAM – SEE STRUCTURAL
05 12 00.06	STEEL TUBE – SEE STRUCTURAL
05 12 00.18	STEEL ANGLE CONTINUOUS – SEE STRUCTURAL
05 12 00.32	STEEL PLATE – SEE STRUCTURAL
05 12 00.36	STEEL PLATE BENT – SEE STRUCTURAL
05 31 00.02	POUR STOP – FLOOR SLAB – SEE STRUCTURAL
05 31 00.11	STEEL ROOF DECK – 3 INCH GALVANIZED – SEE STRUCTURAL
05 40 00.02	STEEL STUDS – 2 1/2 INCH – 16 INCHES O.C. MAX
05 40 00.03	STEEL STUDS – 3 5/8 INCH – 16 INCHES O.C. MAX
05 40 00.10	STEEL STUDS – 10 INCH – 16 INCHES O.C. MAX
05 40 00.19	STEEL Z-CLIP – 16 GAGE MIN. – 1 INCH MIN. DEPTH – 16 INCHES O.C. MAX
06 10 00.21	WOOD BLOCKING – 2X FIRE RETARDANT TREATED – SIZE AS NOTED OR DRAWN
06 10 00.32	PLYWOOD – 1/2 INCH
06 20 00.04	HARDWOOD SILL – 3/4 INCH – 1/4 INCH RADIUS EASED EDGE – TRANSPARENT FINISH
06 20 00.32	HARDWOOD VENEER PLYWOOD – 5/8 INCH – TRANSPARENT FINISH
07 21 00.11	INSULATING NAIL BASE – 2 INCH – EXTERIOR WALL
07 21 00.20	GLASS FIBER INSULATION
07 21 00.50	BACKER ROD AND SEALANT – TYPE AS REQUIRED
07 21 31.02	FOAM INSULATION – SPRAYED-IN-PLACE – 1-1/2 INCH DEPTH BETWEEN STUDS
07 27 13.01	AIR/VAPOR BARRIER MEMBRANE – SELF-ADHERING
07 27 13.02	AIR/VAPOR BARRIER MEMBRANE – SELF-ADHERING – 2 LAYERS
07 27 13.05	AIR/VAPOR BARRIER TRANSITION MEMBRANE – SELF-ADHERING
07 27 13.20	PREFINISHED ALUMINUM FLASHING
07 27 13.21	GALVANIZED SHEET METAL FLASHING
07 27 13.22	FASTENER
07 46 46.01	MINERAL FIBER CEMENT SIDING PANEL
07 46 46.02	MINERAL FIBER CEMENT SMOOTH PANEL
07 46 46.11	STARTER TRACK/STRIP
07 46 46.12	CLIP
07 54 19.01	PVC SINGLE PLY MEMBRANE ROOFING
07 54 19.02	HIGH DENSITY POLYISO RECOVERY BOARD
07 54 19.03	POLYISO RIGID INSULATION
07 54 19.04	POLYISO TAPERED INSULATION
07 54 19.09	SHEET VAPOR RETARDER – TAPE SEAMS
07 54 19.21	FOAM ROD TUBING – CONTINUOUS
07 81 00.01	CEMENTITIOUS FIREPROOFING
07 84 00.01	FIRESAFING MINERAL WOOL
07 84 00.10	INSULATION HANGER SYSTEM
07 84 00.11	CURTAIN WALL INSULATION
07 92 00.01	JOINT SEALANT – TYPE AS REQUIRED
08 44 13.01	ALUMINUM CURTAIN WALL FRAME
08 44 13.30	SPANDREL GLASS
09 21 23.21	GYPSUM SHAFTWALL LINER PANEL – 1 INCH
09 22 16.01	METAL STUD 1-5/8 INCH – 16 INCHES O.C. MAX
09 22 16.03	METAL STUD 3-5/8 INCH – 16 INCHES O.C. MAX
09 29 00.01	5/8 INCH GYPSUM BOARD – LEVEL 4 FINISH
09 29 00.42	REVEAL – PAINTABLE 3/4 INCH
09 30 19.02	PORCELAIN WALL TILE
09 30 19.51	CEMENTITIOUS BACKING BOARD
09 65 13.01	RUBBER BASE – 4"
12 24 00.02	ROLLER SHADE – ELECTRICALLY OPERATED

90% CONSTRUCTION DOCUMENTS

NOT FOR CONSTRUCTION

NORTH ARROW

KEYPLAN

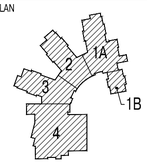

DRAWING NAME:

VERTICAL WALL DETAILS

DRAWN BY:	RPM
REVIEWED BY:	CLO
SCALE:	As Noted
JOB NO.:	1403.00
DATE:	July 25, 2016
DRAWING NUMBER:	A5.11

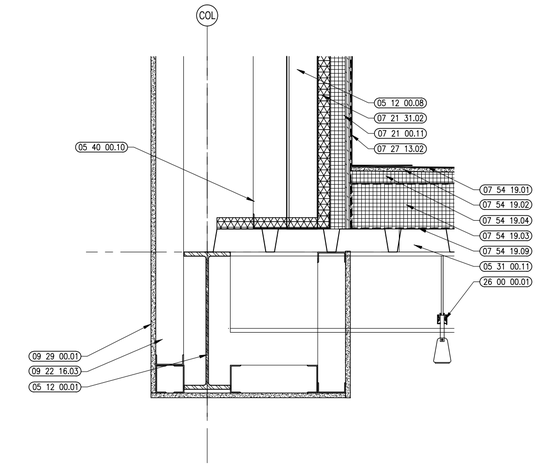

9 VERTICAL WALL DETAIL
1 1/2"= 1'-0"

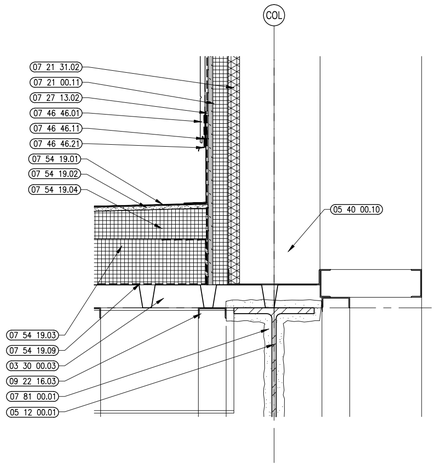

6 VERTICAL WALL DETAIL
1 1/2"= 1'-0"

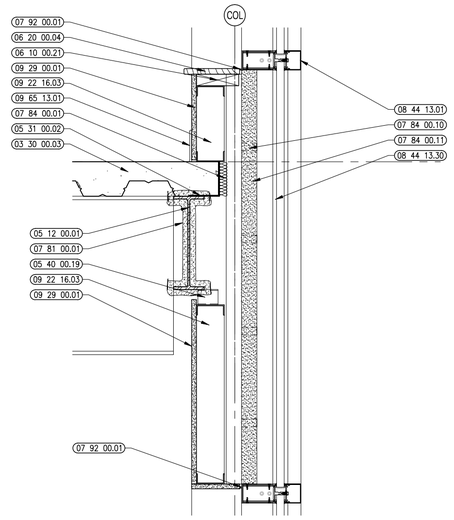

3 VERTICAL WALL DETAIL
1 1/2"= 1'-0"

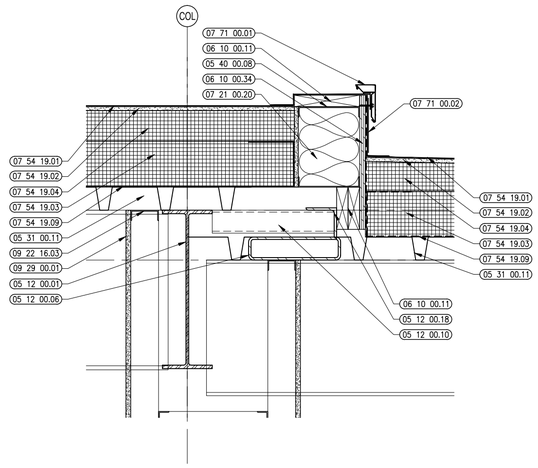

8 VERTICAL WALL DETAIL
1 1/2"= 1'-0"

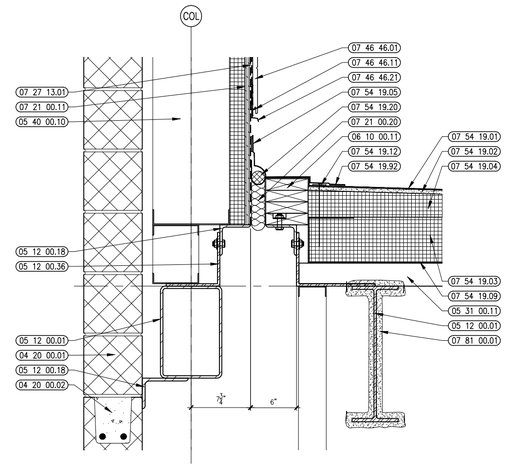

5 EXPANSION JOINT AT WALL DETAIL
1 1/2"= 1'-0"

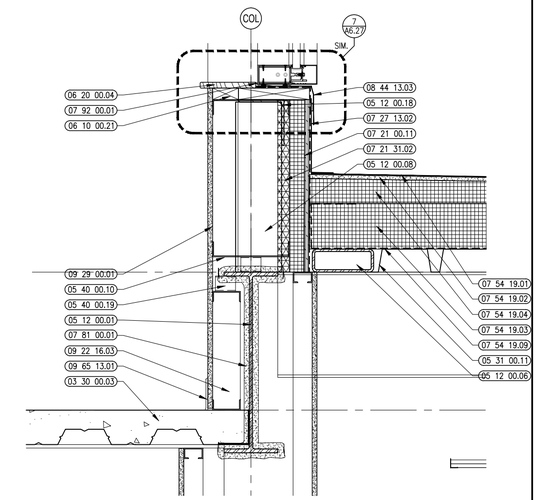

2 VERTICAL WALL DETAIL
1 1/2"= 1'-0"

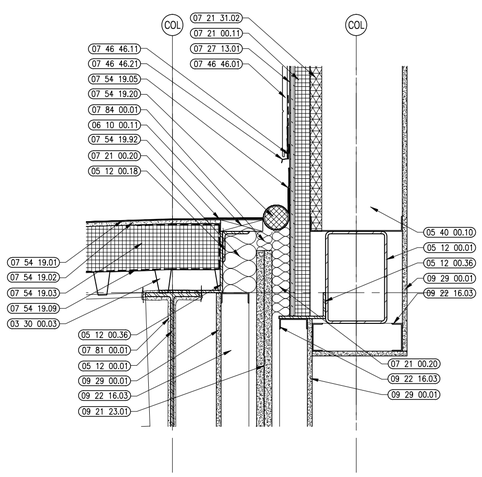

7 EXPANSION JOINT AT WALL DETAIL
1 1/2"= 1'-0"

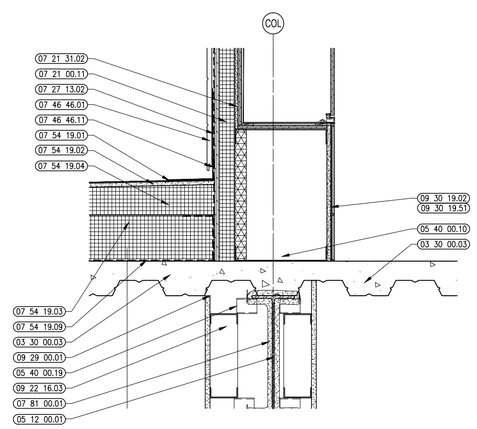

4 VERTICAL WALL DETAIL
1 1/2"= 1'-0"

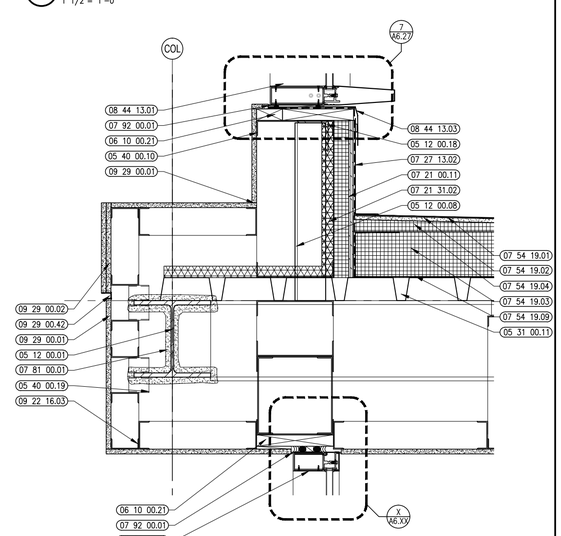

1 VERTICAL WALL DETAIL
1 1/2"= 1'-0"

A13 architects
526 Boston Post Rd Wayland, MA
508.358.0790 www.a13architects.com

BEVERLY MIDDLE SCHOOL

CABOT STREET
BEVERLY, MA 01915

Copyright © 2016 A13 Architects, LLC

KEYNOTE LEGEND: (REFERENCE SHEETS A0.01 & A0.02 FOR MASTER KEYNOTE LIST AND KEYNOTES NOT LISTED)

03 30 00.03	CONCRETE SLAB ON DECK – SEE STRUCTURAL
04 20 00.01	CMU – STANDARD – NORMAL WEIGHT – REFERENCE DRAWINGS FOR DEPTH SIZE AND FIRE RATING
04 20 00.02	CMU BOND BEAM – SEE STRUCTURAL
05 12 00.01	STEEL BEAM – SEE STRUCTURAL
05 12 00.06	STEEL TUBE – SEE STRUCTURAL
05 12 00.08	STEEL TUBE COLUMN – SEE STRUCTURAL
05 12 00.10	STEEL OUTRIGGER – SEE STRUCTURAL
05 12 00.18	STEEL ANGLE CONTINUOUS – SEE STRUCTURAL
05 12 00.36	STEEL PLATE BENT – SEE STRUCTURAL
05 31 00.02	POUR STOP – FLOOR SLAB – SEE STRUCTURAL
05 31 00.11	STEEL ROOF DECK – 3 INCH GALVANIZED – SEE STRUCTURAL
05 40 00.08	STEEL STUDS – 8 INCH – 16 INCHES O.C. MAX
05 40 00.10	STEEL STUDS – 10 INCH – 16 INCHES O.C. MAX
05 40 00.19	STEEL Z–CLIP – 16 GAGE MIN. – 1 INCH MIN. DEPTH – 16 INCHES O.C. MAX
06 10 00.11	WOOD BLOCKING – 2X PRESSURE TREATED – SIZE AS NOTED OR DRAWN
06 10 00.21	WOOD BLOCKING – 2X FIRE RETARDANT TREATED – SIZE AS NOTED OR DRAWN
06 10 00.34	PLYWOOD – 3/4 INCH
06 20 00.04	HARDWOOD SILL – 3/4 INCH – 1/4 INCH RADIUS EASED EDGE – TRANSPARENT FINISH
07 21 00.11	INSULATING NAIL BASE – 2 INCH – EXTERIOR WALL
07 21 00.20	GLASS FIBER INSULATION
07 21 31.02	FOAM INSULATION – SPRAYED–IN–PLACE – 1–1/2 INCH DEPTH BETWEEN STUDS
07 27 13.01	AIR/VAPOR BARRIER MEMBRANE – SELF–ADHERING
07 27 13.02	AIR/VAPOR BARRIER MEMBRANE – SELF–ADHERING – 2 LAYERS
07 46 46.01	MINERAL FIBER CEMENT SIDING PANEL
07 46 46.11	STARTER TRACK/STRIP
07 46 46.21	FLASHING
07 54 19.01	PVC SINGLE PLY MEMBRANE ROOFING
07 54 19.02	HIGH DENSITY POLYISO RECOVERY BOARD
07 54 19.03	POLYISO RIGID INSULATION
07 54 19.04	POLYISO TAPERED INSULATION
07 54 19.05	FLASHING MEMBRANE
07 54 19.09	SHEET VAPOR RETARDER – TAPE SEAMS
07 54 19.12	BLIND NAILER
07 54 19.20	PVC EXPANSION JOINT
07 54 19.92	HOT–AIR WELD
07 71 00.01	FACTORY FABRICATED FASCIA TRIM/ROOF EDGE – CUSTOM COLOR
07 71 00.02	EXPOSED ALUMINUM FINISH METAL – CUSTOM COLOR
07 81 00.01	CEMENTITIOUS FIREPROOFING
07 84 00.01	FIRESAFING MINERAL WOOL
07 84 00.10	INSULATION HANGER SYSTEM
07 84 00.11	CURTAIN WALL INSULATION
07 92 00.01	JOINT SEALANT – TYPE AS REQUIRED
08 44 13.01	ALUMINUM CURTAIN WALL FRAME
08 44 13.03	PREFINISHED ALUMINUM FLASHING
08 44 13.30	SPANDREL GLASS
09 21 23.01	SHAFT ENCLOSURE – 2 HR RATING
09 22 16.03	METAL STUD 3–5/8 INCH – 16 INCHES O.C. MAX
09 29 00.01	5/8 INCH GYPSUM BOARD – LEVEL 4 FINISH
09 29 00.02	5/8 INCH GYPSUM BOARD – 2 LAYERS – LEVEL 4 FINISH
09 29 00.42	REVEAL – PAINTABLE 3/4 INCH
09 30 19.02	PORCELAIN WALL TILE
09 30 19.51	CEMENTITIOUS BACKING BOARD
09 65 13.01	RUBBER BASE – 4"
26 00 00.01	LIGHT FIXTURE – SEE ELECTRICAL

90% CONSTRUCTION DOCUMENTS

NOT FOR CONSTRUCTION

NORTH ARROW

KEYPLAN

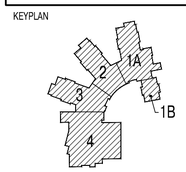

DRAWING NAME:

VERTICAL WALL DETAILS

DRAWN BY:	RPM
REVIEWED BY:	CLO
SCALE:	As Noted
JOB NO.:	1403.00
DATE:	July 25, 2016
DRAWING NUMBER:	A5.12

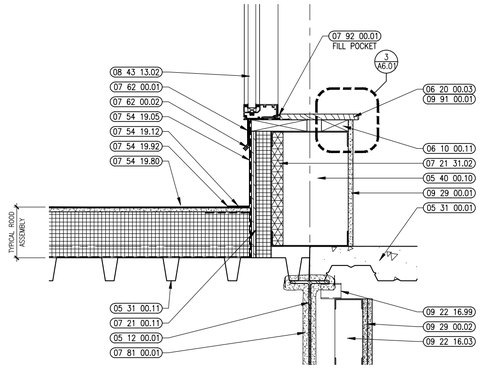

12 THRESHOLD DETAIL
1 1/2" = 1'-0"

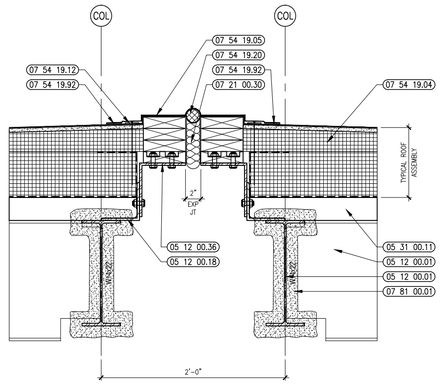

9 EXPANSION JOINT DETAIL
1 1/2" = 1'-0"

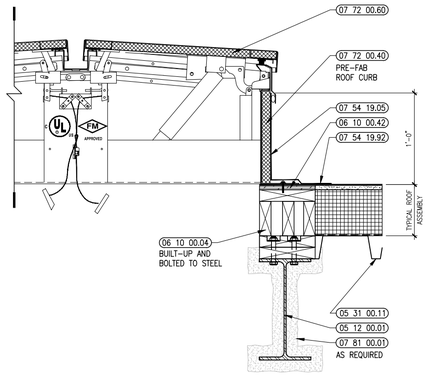

6 SMOKE EVACUATION HATCH DETAIL
1 1/2" = 1'-0"

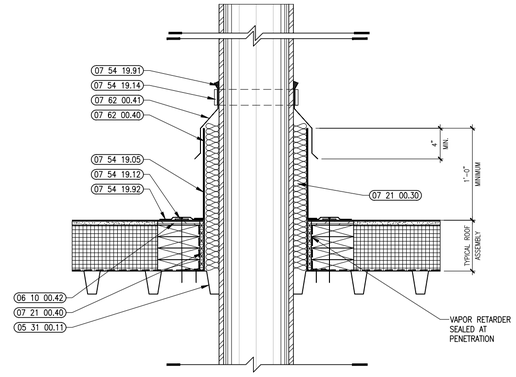

3 TYPICAL HOT PIPE ROOF PENETRATION DETAIL
1 1/2" = 1'-0"

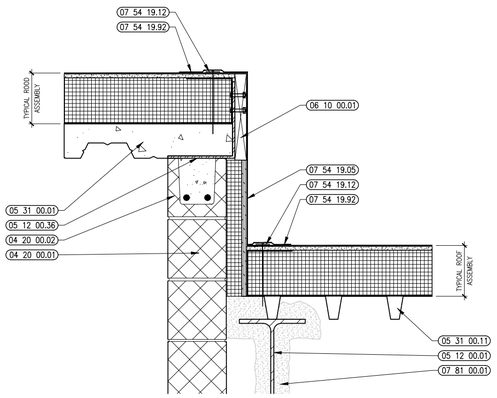

11 WALL TRANSITION DETAIL
1 1/2" = 1'-0"

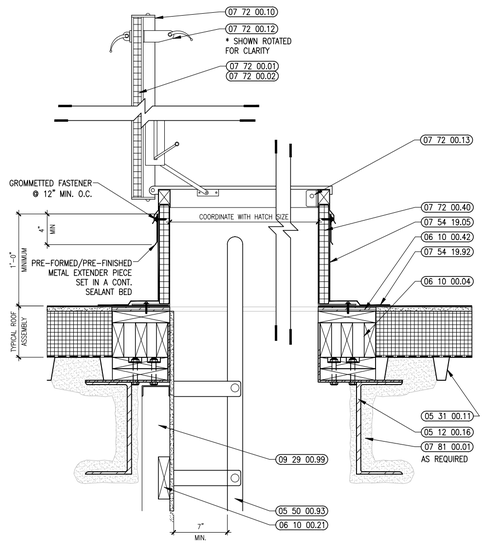

8 ROOF SCUTTLE DETAIL
1 1/2" = 1'-0"

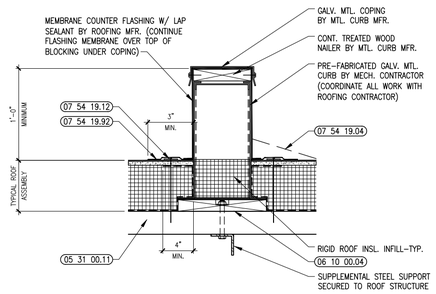

5 ROOF EQUIPMENT CURB DETAIL
1 1/2" = 1'-0"

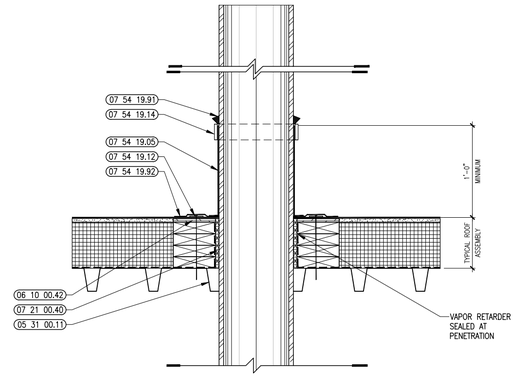

2 TYPICAL ROOF PENETRATION DETAIL
1 1/2" = 1'-0"

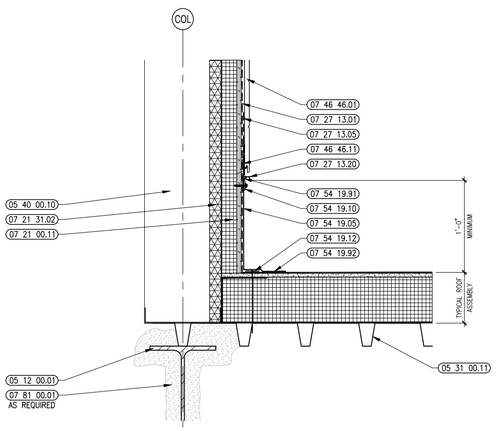

12 FLASHING AT SIDING DETAIL
1 1/2" = 1'-0"

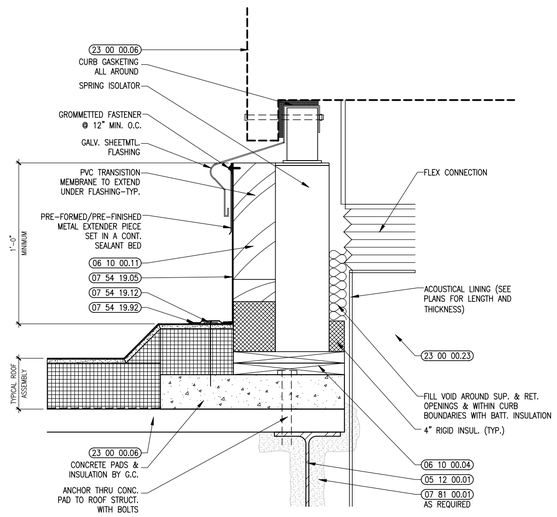

7 SEISMIC ROOFTOP SPRING CURB DETAIL
1 1/2" = 1'-0"

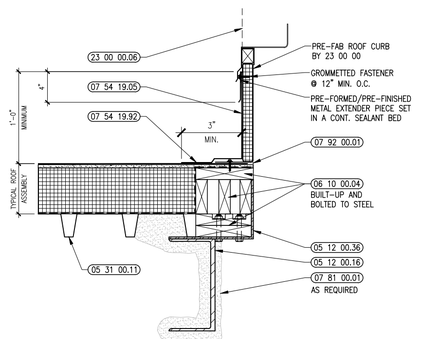

4 TYPICAL ROOF CURB DETAIL
1 1/2" = 1'-0"

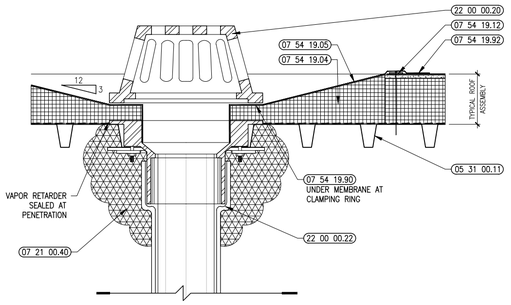

1 TYPICAL ROOF DRAIN DETAIL
1 1/2" = 1'-0"

A13 architects
526 Boston Post Rd Wayland, MA
508.358.0790 www.a13architects.com

BEVERLY MIDDLE SCHOOL

CABOT STREET
BEVERLY, MA 01915

Copyright © 2016 A13 Architects, LLC

KEYNOTE LEGEND: (REFERENCE SHEETS A0.01 & A0.02 FOR MASTER KEYNOTE LIST AND KEYNOTES NOT LISTED)

04 20 00.01	CMU – STANDARD – NORMAL WEIGHT – REFERENCE DRAWINGS FOR DEPTH SIZE AND FIRE RATING
04 20 00.02	CMU BOND BEAM – SEE STRUCTURAL
05 12 00.01	STEEL BEAM – SEE STRUCTURAL
05 12 00.16	STEEL CHANNEL – SEE STRUCTURAL
05 12 00.18	STEEL ANGLE CONTINUOUS – SEE STRUCTURAL
05 12 00.36	STEEL PLATE BENT – SEE STRUCTURAL
05 31 00.01	COMPOSITE STEEL DECK – SEE STRUCTURAL
05 31 00.11	STEEL ROOF DECK – 3 INCH GALVANIZED – SEE STRUCTURAL
05 40 00.10	STEEL STUDS – 10 INCH – 16 INCHES O.C. MAX
05 50 00.93	ROOF ACCESS LADDER – INTERIOR
06 10 00.01	WOOD BLOCKING – (2X) CONTINUOUS – PRESSURE TREATED – ROOF EDGE – SIZE AS NOTED OR DRAWN – STAGGER BOLTED TO ANGLE AT 32 INCHES O.C.
06 10 00.04	WOOD BLOCKING – (2X) CONTINUOUS – PRESSURE TREATED – SIZE AS REQUIRED – ESTABLISH LEVEL INSTALLATION SURFACE FOR ROOFTOP CURB
06 10 00.11	WOOD BLOCKING – 2X PRESSURE TREATED – SIZE AS NOTED OR DRAWN
06 10 00.21	WOOD BLOCKING – 2X FIRE RETARDANT TREATED – SIZE AS NOTED OR DRAWN
06 10 00.42	PLYWOOD PRESSURE TREATED – 1/2 INCH
06 20 00.03	HARDWOOD TRIM – 3/4 INCH – PENCILED EDGE 1/8 INCH RADIUS – TRANSPARENT FINISH
07 21 00.11	INSULATING NAIL BASE – 2 INCH – EXTERIOR WALL
07 21 00.30	MINERAL FIBER INSULATION
07 21 00.40	FOAMED IN PLACE INSULATION / AIR BARRIER
07 21 31.02	FOAM INSULATION – SPRAYED–IN–PLACE – 1–1/2 INCH DEPTH BETWEEN STUDS
07 27 13.01	AIR/VAPOR BARRIER MEMBRANE – SELF–ADHERING
07 27 13.05	AIR/VAPOR BARRIER TRANSITION MEMBRANE – SELF–ADHERING
07 27 13.20	PREFINISHED ALUMINUM FLASHING
07 46 46.01	MINERAL FIBER CEMENT SIDING PANEL
07 46 46.11	STARTER TRACK/STRIP
07 54 19.04	POLYISO TAPERED INSULATION
07 54 19.05	FLASHING MEMBRANE
07 54 19.10	FLAT SECUREMENT BARS
07 54 19.12	BLIND NAILER
07 54 19.14	STAINLESS STEEL HOSE CLAMP
07 54 19.20	PVC EXPANSION JOINT
07 54 19.80	WALKWAY PADS
07 54 19.90	ADHESIVE
07 54 19.91	SEALANT – CONTINUOUS
07 54 19.92	HOT–AIR WELD
07 62 00.01	SHEET METAL FLASHING
07 62 00.02	SHEET METAL COUNTER FLASHING
07 62 00.40	SHEET METAL COLLAR
07 62 00.41	SHEET METAL RAIN HOOD
07 72 00.01	ROOF SCUTTLE – TYPE 1 – 3'–0" x 3'–0"
07 72 00.02	ROOF SCUTTLE – TYPE 2 – 3'–0" x 4'–6"
07 72 00.10	NEOPRENE GASKET ENTIRE PERIMETER TYP.
07 72 00.12	SPRING LATCH W/ HANDLE AND PADLOCK HASP ON INSIDE
07 72 00.13	PADLOCK HASP
07 72 00.40	WELDED ALUMINUM CURB
07 72 00.60	HEAT AND SMOKE VENT – 5'–6" x 12'–0"
07 81 00.01	CEMENTITIOUS FIREPROOFING
07 92 00.01	JOINT SEALANT – TYPE AS REQUIRED
08 43 13.02	ALUMINUM ENTRANCE DOOR
09 22 16.03	METAL STUD 3–5/8 INCH – 16 INCHES O.C. MAX
09 22 16.99	METAL CLIP FOR WALL FRAMING – 16 GA. – 24 INCHES O.C. MAX
09 29 00.01	5/8 INCH GYPSUM BOARD – LEVEL 4 FINISH
09 29 00.02	5/8 INCH GYPSUM BOARD – 2 LAYERS – LEVEL 4 FINISH
09 29 00.99	GYPSUM BOARD SYSTEM – LEVEL 4 FINISH – REFER TO FLOOR PLANS AND WALL TYPES FOR COMPONENTS

90% CONSTRUCTION DOCUMENTS

NOT FOR CONSTRUCTION

NORTH ARROW

KEYPLAN

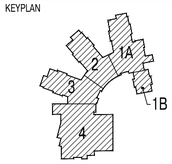

DRAWING NAME:

TYPICAL ROOF DETAILS

DRAWN BY:	RPM
REVIEWED BY:	CLO
SCALE:	As Noted
JOB NO.:	1403.00
DATE:	July 25, 2016
DRAWING NUMBER:	A5.21

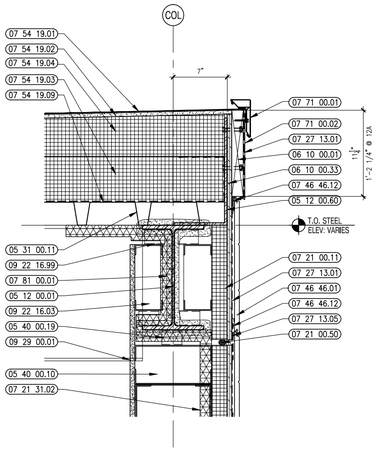

12 12A VERTICAL ROOF DETAIL
1 1/2"=1'-0"

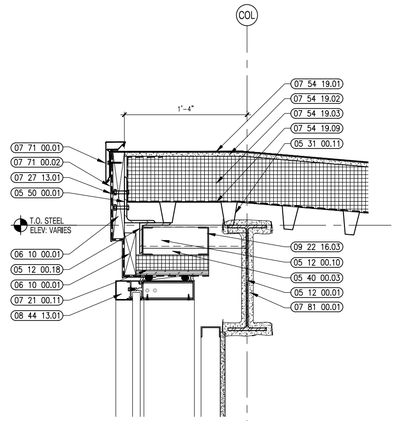

11 VERTICAL ROOF DETAIL
1 1/2"=1'-0"

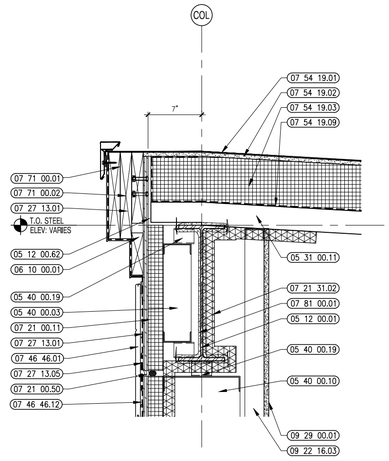

8 VERTICAL ROOF DETAIL
1 1/2"=1'-0"

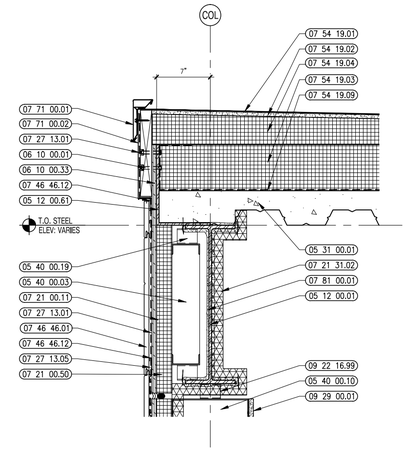

6 VERTICAL ROOF DETAIL
1 1/2" = 1'-0"

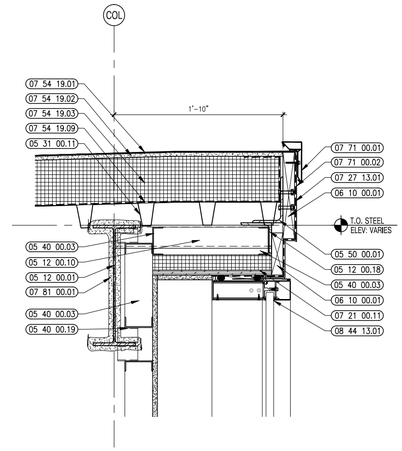

3 VERTICAL ROOF DETAIL
1 1/2" = 1'-0"

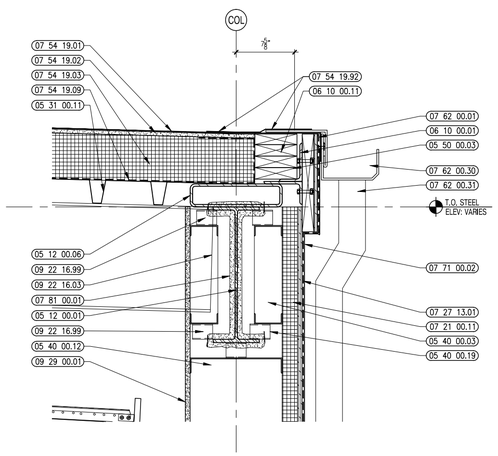

10 VERTICAL ROOF DETAIL
1 1/2"=1'-0"

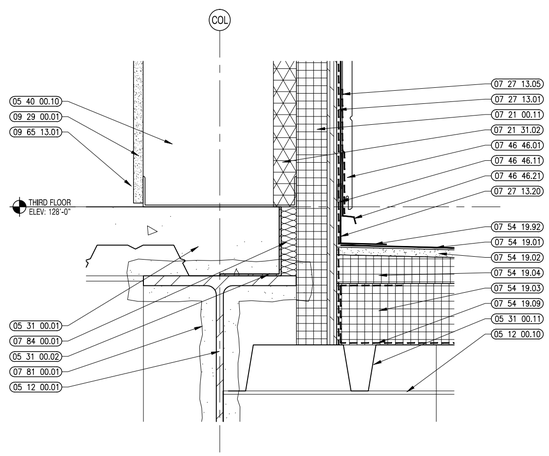

7 VERTICAL ROOF DETAIL
3"=1'-0"

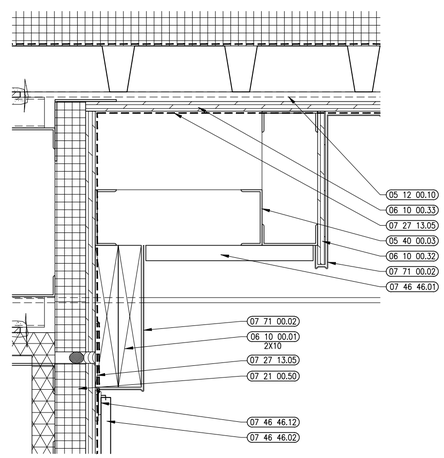

5 VERTICAL ROOF DETAIL
3"=1'-0"

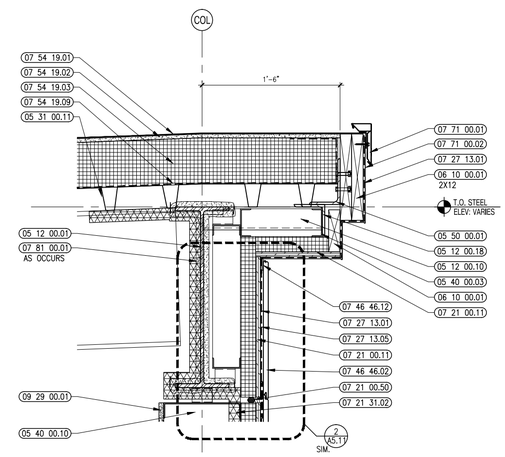

2 VERTICAL ROOF DETAIL
1 1/2" = 1'-0"

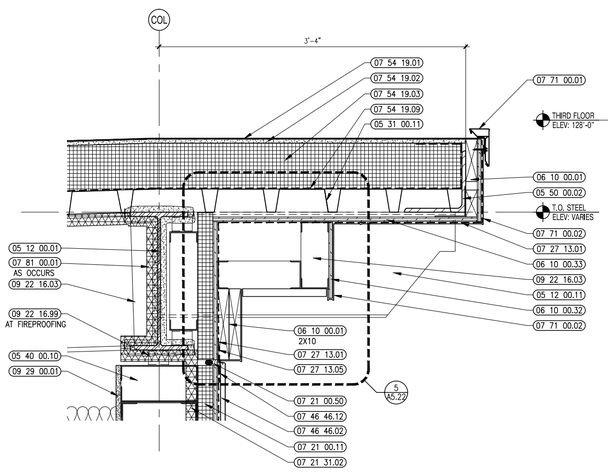

9 VERTICAL ROOF DETAIL
1 1/2"=1'-0"

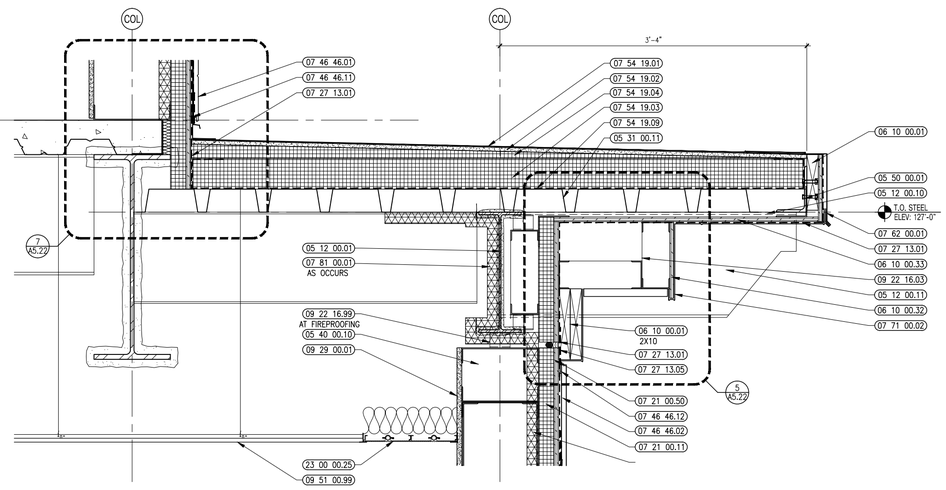

4 VERTICAL ROOF DETAIL
1-1/2"=1'-0"

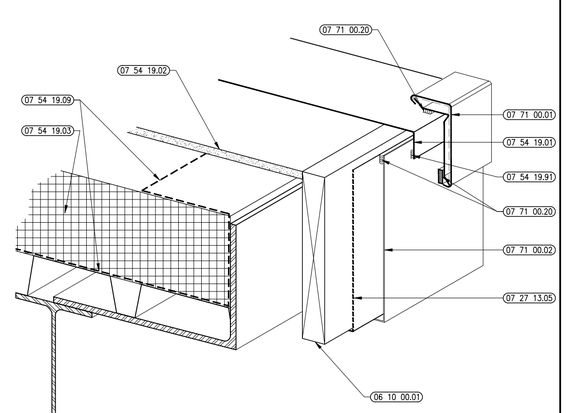

1 TYPICAL AVB TIE-IN AT ROOF
N.T.S. REFER TO MFR. REQUIREMENTS FOR ADDITIONAL INFO

A13 architects
526 Boston Post Rd Wayland, MA
508.358.0790 www.a13architects.com

BEVERLY MIDDLE SCHOOL

CABOT STREET
BEVERLY, MA 01915

Copyright © 2016 A13 Architects, LLC

KEYNOTE LEGEND: (REFERENCE SHEETS A0.01 & A0.02 FOR MASTER KEYNOTE LIST AND KEYNOTES NOT LISTED)

05 12 00.01	STEEL BEAM – SEE STRUCTURAL
05 12 00.06	STEEL TUBE – SEE STRUCTURAL
05 12 00.10	STEEL OUTRIGGER – SEE STRUCTURAL
05 12 00.11	STEEL WIDE FLANGE OUTRIGGER – SHOP APPLIED COLOR COATING – SEE STRUCTURAL
05 12 00.18	STEEL ANGLE CONTINUOUS – SEE STRUCTURAL
05 12 00.60	STEEL BENT PLATE – 7 x 14 x 5/16 – CONTINUOUS – 1/2 INCH DIA HOLES @ VERTICAL LEG AT 32 INCHES O.C. – WELD TO STRUCTURAL STEEL – SEE STRUCTURAL
05 12 00.61	STEEL BENT PLATE – 7 x 10 1/2 x 5/16 – CONTINUOUS – 1/2 INCH DIA HOLES @ VERTICAL LEG AT 32 INCHES O.C. – WELD TO STRUCTURAL STEEL – SEE STRUCTURAL
05 12 00.62	STEEL BENT PLATE – 7 x 8 1/2 x 5/16 – CONTINUOUS – 1/2 INCH DIA HOLES @ VERTICAL LEG AT 32 INCHES O.C. – WELD TO STRUCTURAL STEEL – SEE STRUCTURAL
05 31 00.01	COMPOSITE STEEL DECK – SEE STRUCTURAL
05 31 00.02	POUR STOP – FLOOR SLAB – SEE STRUCTURAL
05 31 00.11	STEEL ROOF DECK – 3 INCH GALVANIZED – SEE STRUCTURAL
05 40 00.03	STEEL STUDS – 3 5/8 INCH – 16 INCHES O.C. MAX
05 40 00.10	STEEL STUDS – 10 INCH – 16 INCHES O.C. MAX
05 40 00.12	STEEL STUDS – 12 INCH – 16 INCHES O.C. MAX
05 40 00.19	STEEL Z–CLIP – 16 GAGE MIN. – 1 INCH MIN. DEPTH – 16 INCHES O.C. MAX
05 50 00.01	STEEL ANGLE – 6 x 4 x 5/16 LLV – CONTINUOUS – 1/2 INCH DIA SLOTTED HOLES @ VERTICAL LEG STAGGERED – HOLES @ 36 INCHES O.C.
05 50 00.02	STEEL ANGLE – 8 x 8 x 1/2 LLV – CONTINUOUS – 1/2 INCH DIA SLOTTED HOLES @ VERTICAL LEG STAGGERED – HOLES @ 36 INCHES O.C.
05 50 00.03	STEEL ANGLE – 5 x 3 x 5/16 LLH – CONTINUOUS – 1/2 INCH DIA SLOTTED HOLES @ VERTICAL LEG STAGGERED – HOLES @ 36 INCHES O.C.
06 10 00.01	WOOD BLOCKING – (2X) CONTINUOUS – PRESSURE TREATED – ROOF EDGE – SIZE AS NOTED OR DRAWN – STAGGER BOLTED TO ANGLE AT 32 INCHES O.C.
06 10 00.11	WOOD BLOCKING – 2X PRESSURE TREATED – SIZE AS NOTED OR DRAWN
06 10 00.32	PLYWOOD – 1/2 INCH
06 10 00.33	PLYWOOD – 5/8 INCH
07 21 00.11	INSULATING NAIL BASE – 2 INCH – EXTERIOR WALL
07 21 00.50	BACKER ROD AND SEALANT – TYPE AS REQUIRED
07 21 31.02	FOAM INSULATION – SPRAYED–IN–PLACE – 1–1/2 INCH DEPTH BETWEEN STUDS
07 27 13.01	AIR/VAPOR BARRIER MEMBRANE – SELF–ADHERING
07 27 13.05	AIR/VAPOR BARRIER TRANSITION MEMBRANE – SELF–ADHERING
07 27 13.20	PREFINISHED ALUMINUM FLASHING
07 46 46.01	MINERAL FIBER CEMENT SIDING PANEL
07 46 46.02	MINERAL FIBER CEMENT SMOOTH PANEL
07 46 46.11	STARTER TRACK/STRIP
07 46 46.12	CLIP
07 46 46.21	FLASHING
07 54 19.01	PVC SINGLE PLY MEMBRANE ROOFING
07 54 19.02	HIGH DENSITY POLYISO RECOVERY BOARD
07 54 19.03	POLYISO RIGID INSULATION
07 54 19.04	POLYISO TAPERED INSULATION
07 54 19.09	SHEET VAPOR RETARDER – TAPE SEAMS
07 54 19.91	SEALANT – CONTINUOUS
07 54 19.92	HOT–AIR WELD
07 62 00.01	SHEET METAL FLASHING
07 62 00.30	GUTTER
07 62 00.31	DOWNSPOUT
07 71 00.01	FACTORY FABRICATED FASCIA TRIM/ROOF EDGE – CUSTOM COLOR
07 71 00.02	EXPOSED ALUMINUM FINISH METAL – CUSTOM COLOR
07 71 00.20	CONTINUOUS SEALANT – TYPE AS REQUIRED

90% CONSTRUCTION DOCUMENTS

NOT FOR CONSTRUCTION

NORTH ARROW

KEYPLAN

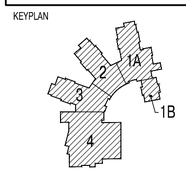

DRAWING NAME:

VERTICAL ROOF DETAILS

DRAWN BY: RPM / JEQ
REVIEWED BY: CLO
SCALE: As Noted
JOB NO.: 1403.00
DATE: July 25, 2016
DRAWING NUMBER: A5.22

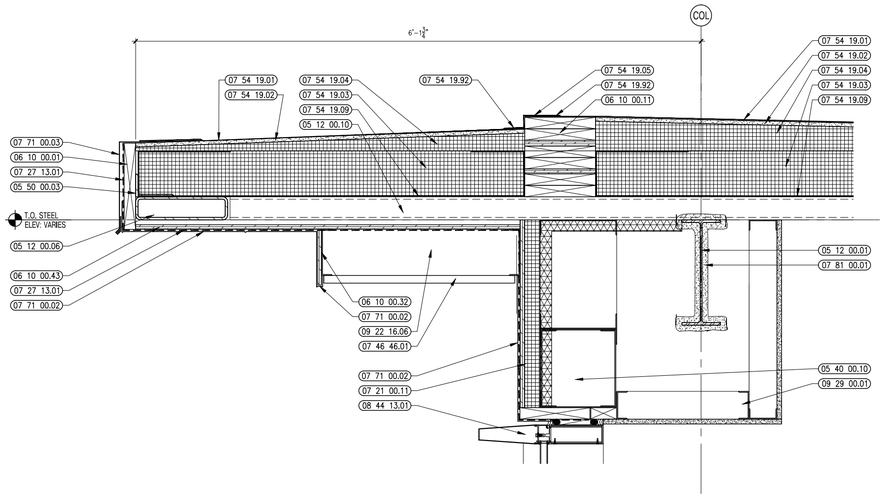

7 VERTICAL ROOF DETAIL
1 1/2" = 1'-0"

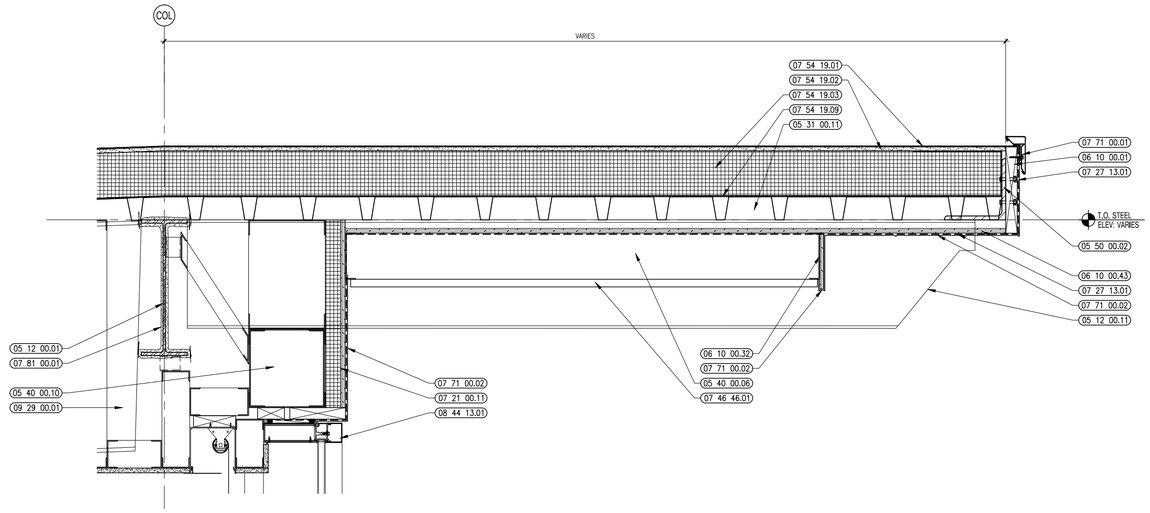

3 VERTICAL ROOF DETAIL
1 1/2" = 1'-0"

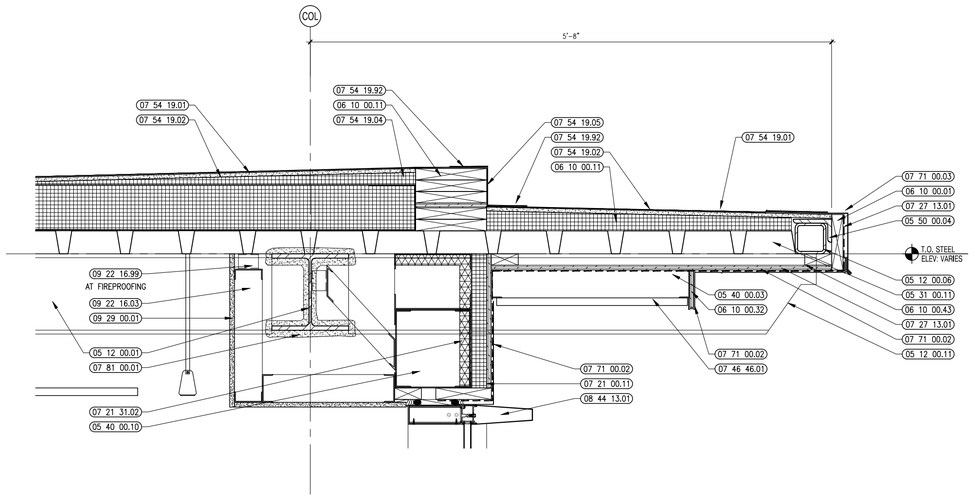

6 VERTICAL ROOF DETAIL
1 1/2" = 1'-0"

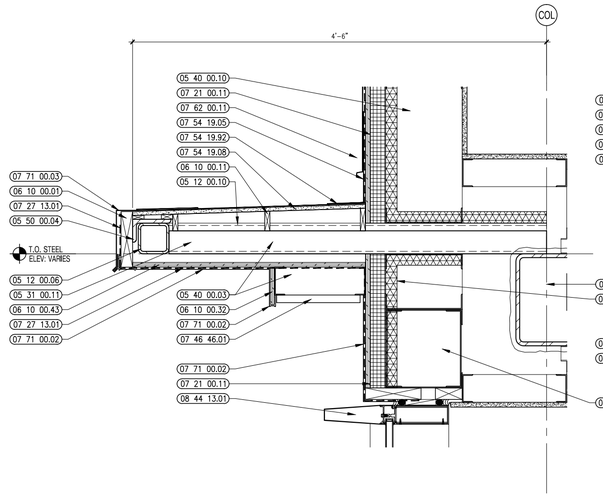

4 VERTICAL ROOF DETAIL
1 1/2" = 1'-0"

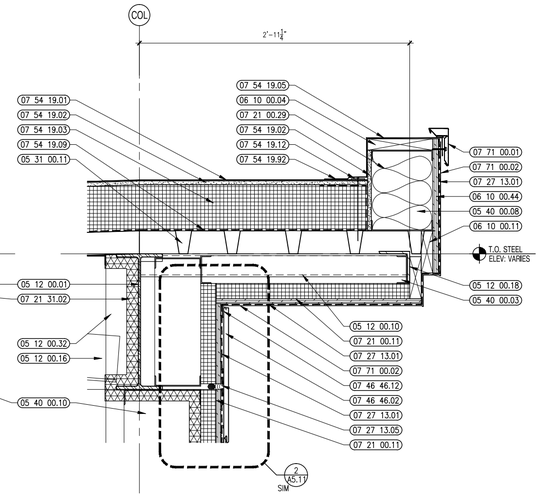

2 VERTICAL ROOF DETAIL
1 1/2" = 1'-0"

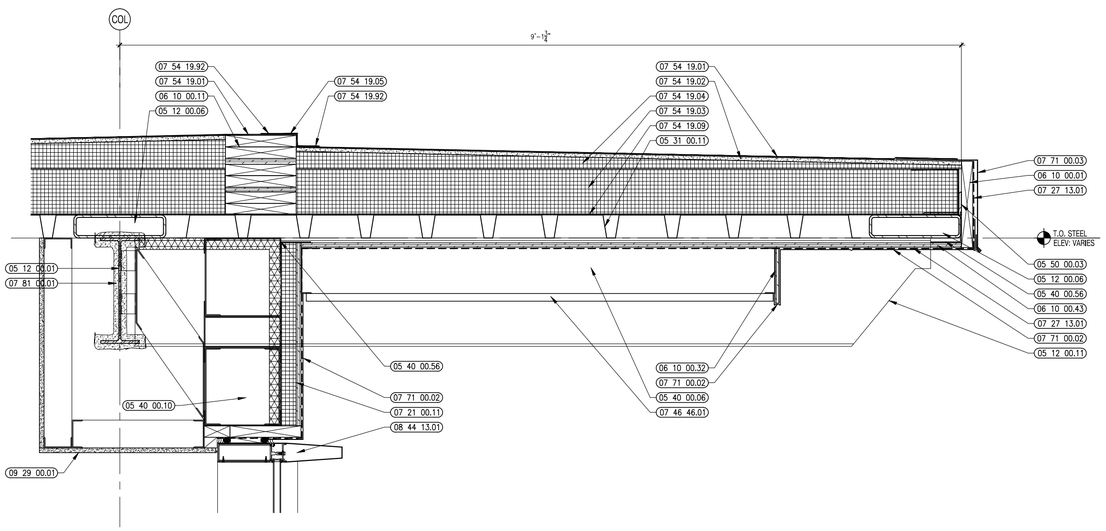

5 VERTICAL ROOF DETAIL
1 1/2" = 1'-0"

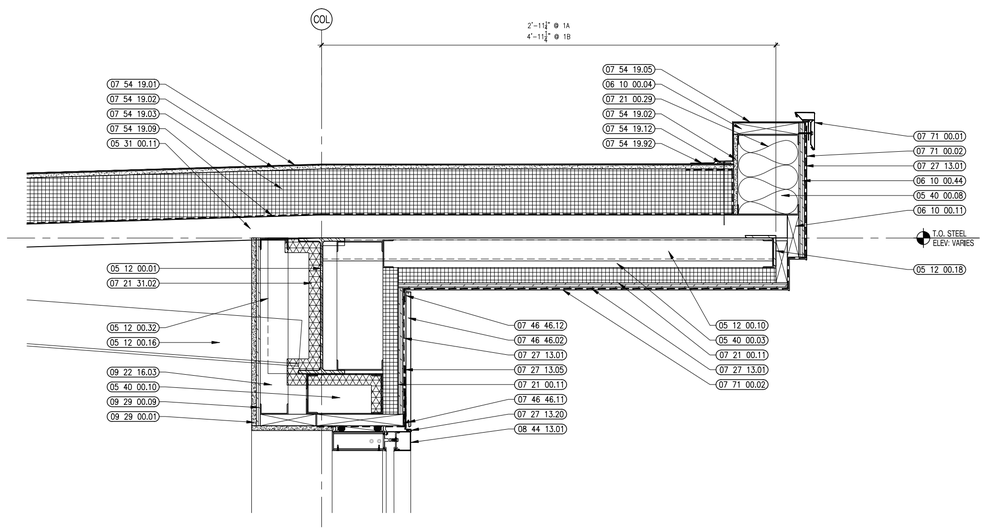

1 VERTICAL ROOF DETAIL
1 1/2" = 1'-0"

A13 architects
526 Boston Post Rd Wayland, MA
508.358.0790 www.a13architects.com

BEVERLY MIDDLE SCHOOL

CABOT STREET
BEVERLY, MA 01915

Copyright © 2016 A13 Architects, LLC

KEYNOTE LEGEND: (REFERENCE SHEETS A0.01 & A0.02 FOR MASTER KEYNOTE LIST AND KEYNOTES NOT LISTED)

05 12 00.01	STEEL BEAM – SEE STRUCTURAL
05 12 00.06	STEEL TUBE – SEE STRUCTURAL
05 12 00.10	STEEL OUTRIGGER – SEE STRUCTURAL
05 12 00.11	STEEL, WIDE FLANGE OUTRIGGER – SHOP APPLIED COLOR COATING – SEE STRUCTURAL
05 12 00.16	STEEL CHANNEL – SEE STRUCTURAL
05 12 00.18	STEEL ANGLE CONTINUOUS – SEE STRUCTURAL
05 12 00.32	STEEL PLATE – SEE STRUCTURAL
05 31 00.11	STEEL ROOF DECK – 3 INCH GALVANIZED – SEE STRUCTURAL
05 40 00.03	STEEL STUDS – 3 5/8 INCH – 16 INCHES O.C. MAX
05 40 00.06	STEEL STUDS – 6 INCH – 16 INCHES O.C. MAX
05 40 00.08	STEEL STUDS – 8 INCH – 16 INCHES O.C. MAX
05 40 00.10	STEEL STUDS – 10 INCH – 16 INCHES O.C. MAX
05 40 00.56	LIGHT GAGE BENT PLATE – SIZE AS REQUIRED
05 50 00.02	STEEL ANGLE – 8 x 8 x 1/2 LLV – CONTINUOUS – 1/2 INCH DIA SLOTTED HOLES @ VERTICAL LEG STAGGERED – HOLES @ 36 INCHES O.C.
05 50 00.03	STEEL ANGLE – 5 x 3 x 5/16 LLH – CONTINUOUS – 1/2 INCH DIA SLOTTED HOLES @ VERTICAL LEG STAGGERED – HOLES @ 36 INCHES O.C.
05 50 00.04	STEEL ANGLE – 5 x 3 x 1/2 LLH – CONTINUOUS – 1/2 INCH DIA SLOTTED HOLES @ VERTICAL LEG STAGGERED – HOLES @ 36 INCHES O.C.
06 10 00.01	WOOD BLOCKING – (2x) CONTINUOUS – PRESSURE TREATED – ROOF EDGE – SIZE AS NOTED OR DRAWN – STAGGER BOLTED TO ANGLE AT 32 INCHES O.C.
06 10 00.04	WOOD BLOCKING – (2x) CONTINUOUS – PRESSURE TREATED – SIZE AS REQUIRED – ESTABLISH LEVEL INSTALLATION SURFACE FOR ROOFTOP CURB
06 10 00.11	WOOD BLOCKING – 2X PRESSURE TREATED – SIZE AS NOTED OR DRAWN
06 10 00.32	PLYWOOD – 1/2 INCH
06 10 00.43	PLYWOOD PRESSURE TREATED – 5/8 INCH
06 10 00.44	PLYWOOD PRESSURE TREATED – 3/4 INCH
07 21 00.11	INSULATING NAIL BASE – 2 INCH – EXTERIOR WALL
07 21 00.29	GLASS FIBER ACOUSTICAL BLANKET INSULATION – MATCH DEPTH OF STUD – UNFACED
07 21 31.02	FOAM INSULATION – SPRAYED-IN-PLACE – 1-1/2 INCH DEPTH BETWEEN STUDS
07 27 13.01	AIR/VAPOR BARRIER MEMBRANE – SELF-ADHERING
07 27 13.05	AIR/VAPOR BARRIER TRANSITION MEMBRANE – SELF-ADHERING
07 27 13.20	PREFINISHED ALUMINUM FLASHING
07 46 46.01	MINERAL FIBER CEMENT SIDING PANEL
07 46 46.02	MINERAL FIBER CEMENT SMOOTH PANEL
07 46 46.11	STARTER TRACK/STRIP
07 46 46.12	CLIP
07 54 19.01	PVC SINGLE PLY MEMBRANE ROOFING
07 54 19.02	HIGH DENSITY POLYISO RECOVERY BOARD
07 54 19.03	POLYISO RIGID INSULATION
07 54 19.04	POLYISO TAPERED INSULATION
07 54 19.05	FLASHING MEMBRANE
07 54 19.08	FIBERGLASS MAT FACED GYPSUM RECOVERY BOARD
07 54 19.09	SHEET VAPOR RETARDER – TAPE SEAMS
07 54 19.12	BLIND NAILER
07 54 19.92	HOT-AIR WELD
07 62 00.11	PRE-FINISHED ALUMINUM FLASHING – CUSTOM COLOR
07 71 00.01	FACTORY FABRICATED FASCIA TRIM/ROOF EDGE – CUSTOM COLOR
07 71 00.02	EXPOSED ALUMINUM FINISH METAL – CUSTOM COLOR
07 71 00.03	ALUMINUM DRIP EDGE – CUSTOM COLOR
07 81 00.01	CEMENTITIOUS FIREPROOFING
08 44 13.01	ALUMINUM CURTAIN WALL FRAME
09 22 16.03	METAL STUD 3-5/8 INCH – 16 INCHES O.C. MAX
09 22 16.06	METAL STUD 6 INCH – 16 INCHES O.C. MAX
09 22 16.99	METAL CLIP FOR WALL FRAMING – 16 GA. – 24 INCHES O.C. MAX
09 29 00.01	5/8 INCH GYPSUM BOARD – LEVEL 4 FINISH

90% CONSTRUCTION DOCUMENTS

NOT FOR CONSTRUCTION

NORTH ARROW

KEYPLAN

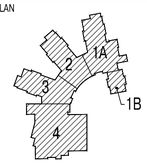

DRAWING NAME:

VERTICAL ROOF DETAILS

DRAWN BY: RPM / JEQ

REVIEWED BY: CLO

SCALE: As Noted

JOB NO.: 1403.00

DATE: July 25, 2016

DRAWING NUMBER: A5.23

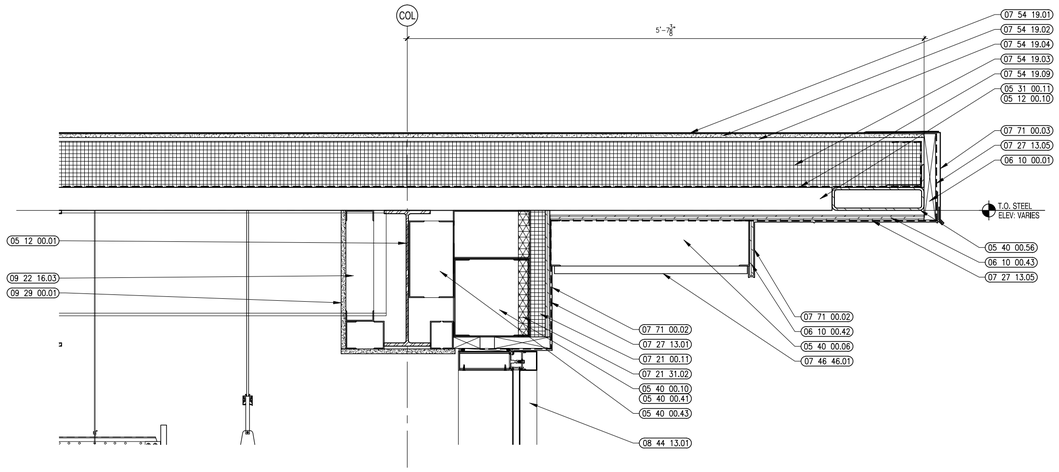

5 VERTICAL ROOF DETAIL
1-1/2" = 1'-0"

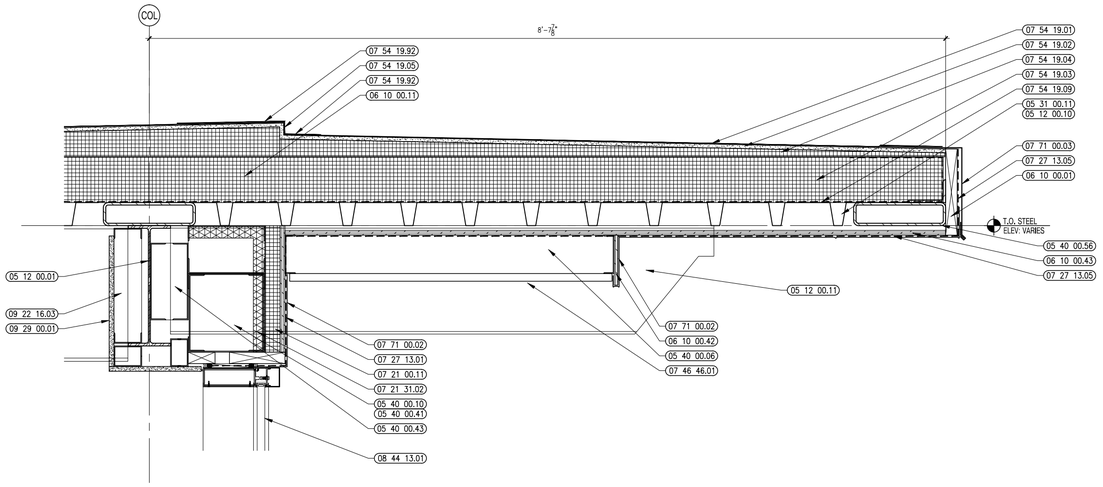

4 VERTICAL ROOF DETAIL
1-1/2" = 1'-0"

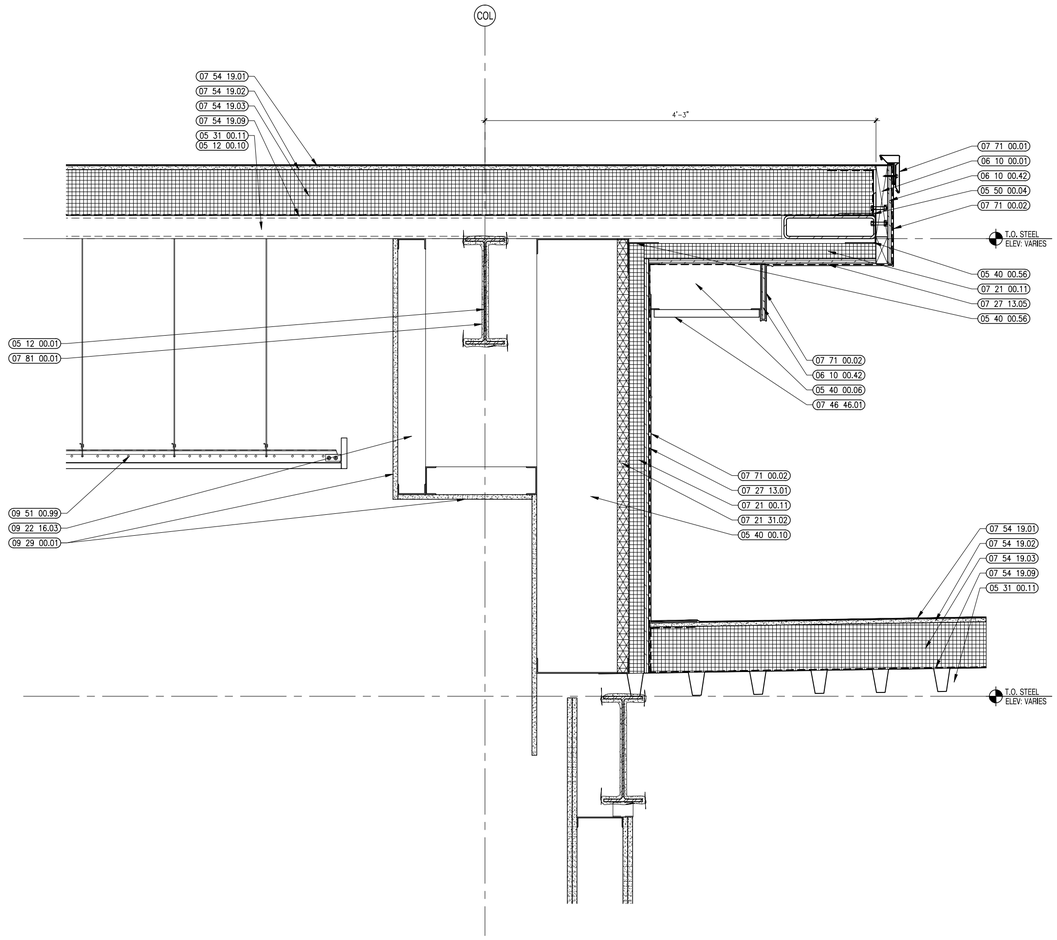

2 VERTICAL ROOF DETAIL
1-1/2" = 1'-0"

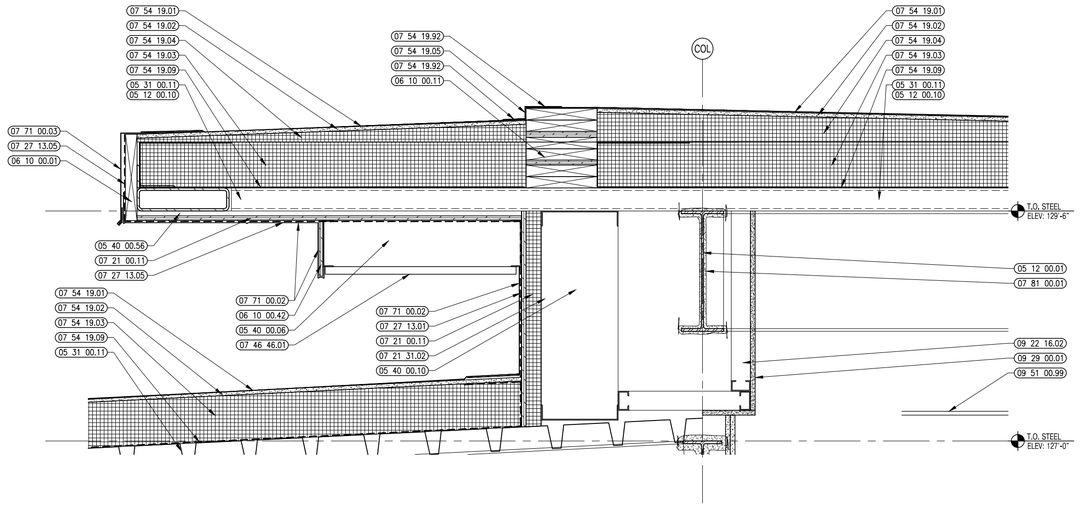

3 VERTICAL ROOF DETAIL
1-1/2" = 1'-0"

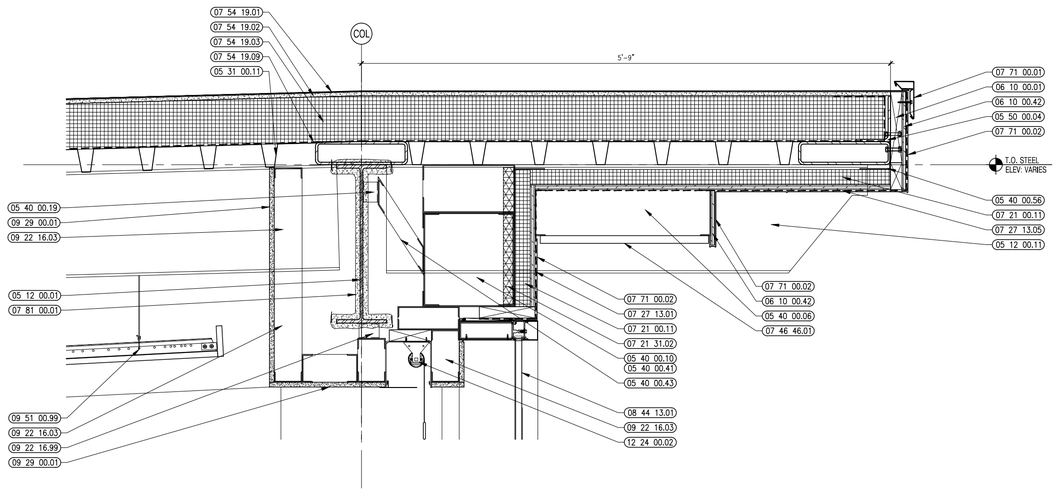

1 VERTICAL ROOF DETAIL
1-1/2" = 1'-0"

architects
526 Boston Post Rd Wayland, MA
508.358.0790 www.ai3architects.com

BEVERLY MIDDLE SCHOOL

CABOT STREET
BEVERLY, MA 01915

Copyright © 2016 AI3 Architects, LLC

KEYNOTE LEGEND: (REFERENCE SHEETS A0.01 & A0.02 FOR MASTER KEYNOTE LIST AND KEYNOTES NOT LISTED)

05 12 00.01	STEEL BEAM – SEE STRUCTURAL
05 12 00.10	STEEL OUTRIGGER – SEE STRUCTURAL
05 12 00.11	STEEL WIDE FLANGE OUTRIGGER – SHOP APPLIED COLOR COATING – SEE STRUCTURAL
05 31 00.11	STEEL ROOF DECK – 3 INCH GALVANIZED – SEE STRUCTURAL
05 40 00.06	STEEL STUDS – 6 INCH – 16 INCHES O.C. MAX
05 40 00.10	STEEL STUDS – 10 INCH – 16 INCHES O.C. MAX
05 40 00.19	STEEL Z–CLIP – 16 GAGE MIN. – 1 INCH MIN. DEPTH – 16 INCHES O.C. MAX
05 40 00.41	STEEL STUD & TRACK – BOXED HEADER
05 40 00.43	STEEL KICKER – SIZE AS REQUIRED
05 40 00.56	LIGHT GAGE BENT PLATE – SIZE AS REQUIRED
05 50 00.04	STEEL ANGLE – 5 x 3 x 1/2 LLH – CONTINUOUS – 1/2 INCH DIA SLOTTED HOLES @ VERTICAL LEG STAGGERED – HOLES @ 36 INCHES O.C.
06 10 00.01	WOOD BLOCKING – (2X) CONTINUOUS – PRESSURE TREATED – ROOF EDGE – SIZE AS NOTED OR DRAWN – STAGGER BOLTED TO ANGLE AT 32 INCHES O.C.
06 10 00.11	WOOD BLOCKING – 2X PRESSURE TREATED – SIZE AS NOTED OR DRAWN
06 10 00.42	PLYWOOD PRESSURE TREATED – 1/2 INCH
06 10 00.43	PLYWOOD PRESSURE TREATED – 5/8 INCH
07 21 00.11	INSULATING NAIL BASE – 2 INCH – EXTERIOR WALL
07 21 31.02	FOAM INSULATION – SPRAYED–IN–PLACE – 1–1/2 INCH DEPTH BETWEEN STUDS
07 27 13.01	AIR/VAPOR BARRIER MEMBRANE – SELF–ADHERING
07 27 13.05	AIR/VAPOR BARRIER TRANSITION MEMBRANE – SELF–ADHERING
07 46 46.01	MINERAL FIBER CEMENT SIDING PANEL
07 54 19.01	PVC SINGLE PLY MEMBRANE ROOFING
07 54 19.02	HIGH DENSITY POLYISO RECOVERY BOARD
07 54 19.03	POLYISO RIGID INSULATION
07 54 19.04	POLYISO TAPERED INSULATION
07 54 19.05	FLASHING MEMBRANE
07 54 19.09	SHEET VAPOR RETARDER – TAPE SEAMS
07 54 19.92	HOT–AIR WELD
07 71 00.01	FACTORY FABRICATED FASCIA TRIM/ROOF EDGE – CUSTOM COLOR
07 71 00.02	EXPOSED ALUMINUM FINISH METAL – CUSTOM COLOR
07 71 00.03	ALUMINUM DRIP EDGE – CUSTOM COLOR
07 81 00.01	CEMENTITIOUS FIREPROOFING
08 44 13.01	ALUMINUM CURTAIN WALL FRAME
09 22 16.02	METAL STUD 2–1/2 INCH – 16 INCHES O.C. MAX
09 22 16.03	METAL STUD 3–5/8 INCH – 16 INCHES O.C. MAX
09 22 16.99	METAL CLIP FOR WALL FRAMING – 16 GA. – 24 INCHES O.C. MAX
09 29 00.01	5/8 INCH GYPSUM BOARD – LEVEL 4 FINISH
09 51 00.99	ACOUSTICAL CEILING – REFERENCE REFLECTED CEILING PLANS FOR TYPE AND HEIGHT
12 24 00.02	ROLLER SHADE – ELECTRICALLY OPERATED

90% CONSTRUCTION DOCUMENTS

NOT FOR CONSTRUCTION

NORTH ARROW

KEYPLAN

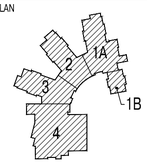

DRAWING NAME:

VERTICAL ROOF DETAILS

DRAWN BY:	RPM / JEQ
REVIEWED BY:	CLO
SCALE:	As Noted
JOB NO.:	1403.00
DATE:	July 25, 2016
DRAWING NUMBER:	A5.24

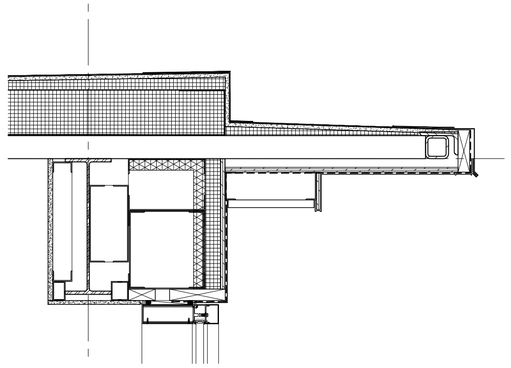

3 VERTICAL ROOF DETAIL
1-1/2" = 1'-0"

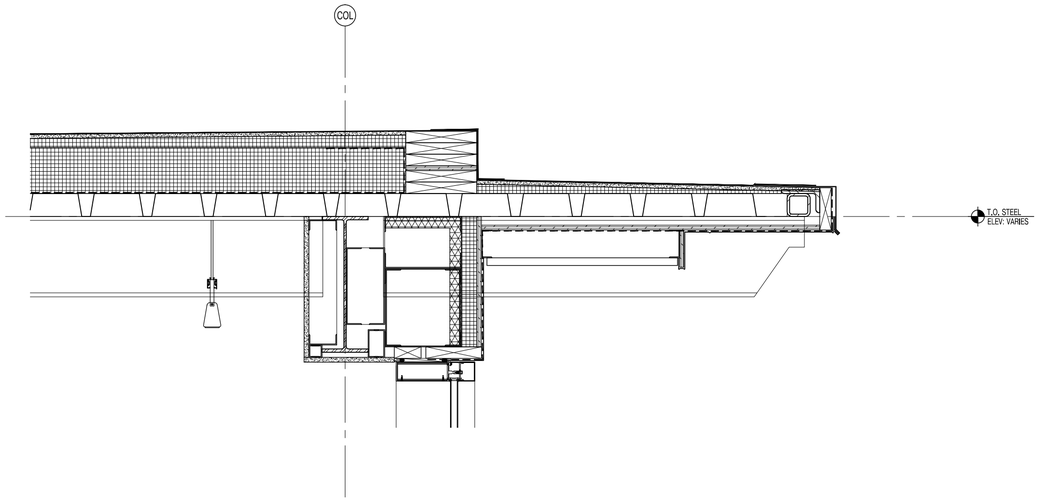

2 VERTICAL ROOF DETAIL
1-1/2" = 1'-0"

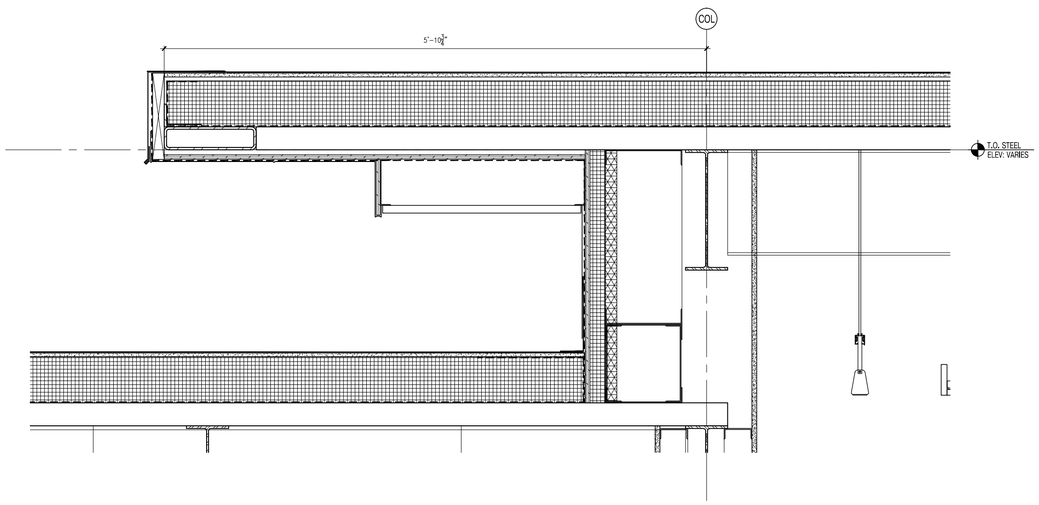

1 VERTICAL ROOF DETAIL
1-1/2" = 1'-0"

526 Boston Post Rd Wayland, MA
508.358.0790 www.ai3architects.com

BEVERLY
MIDDLE
SCHOOL

CABOT STREET
BEVERLY, MA 01915

KEYNOTE LEGEND: (REFERENCE SHEETS A0.01 & A0.02 FOR MASTER KEYNOTE LIST AND KEYNOTES NOT LISTED)

90% CONSTRUCTION DOCUMENTS

NOT FOR CONSTRUCTION

NORTH ARROW

KEYPLAN

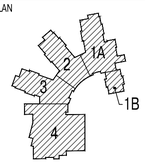

DRAWING NAME:

VERTICAL
ROOF DETAILS

DRAWN BY:	RPM / JEQ
REVIEWED BY:	CLO
SCALE:	As Noted
JOB NO.:	1403.00
DATE:	July 25, 2016
DRAWING NUMBER:	A5.25

Copyright © 2016 Ai3 Architects, LLC

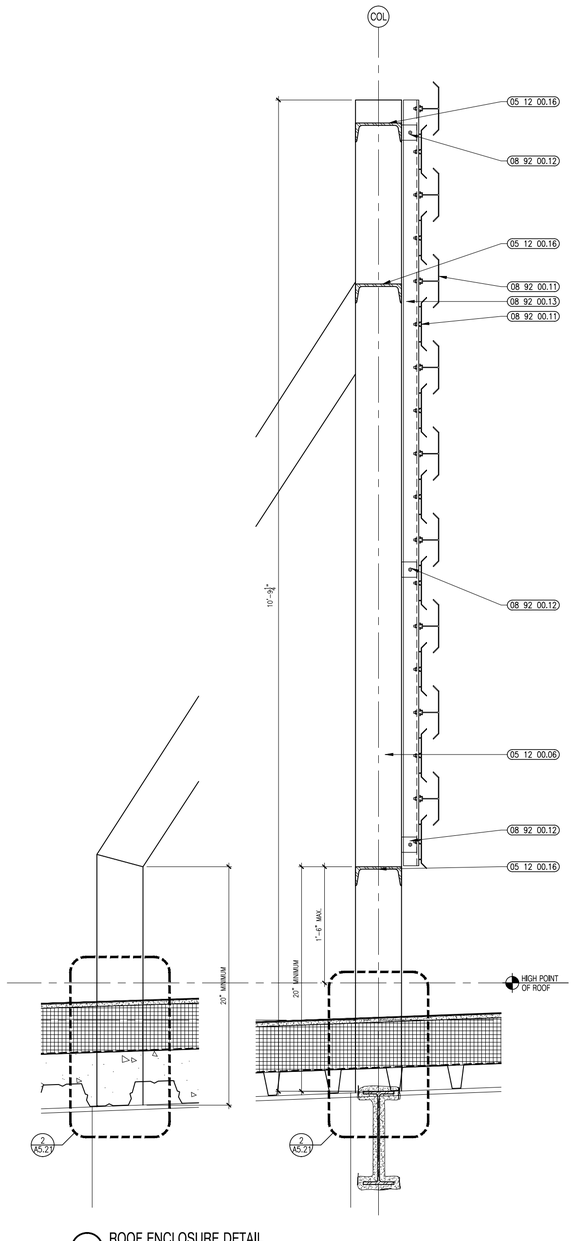

3 ROOF ENCLOSURE DETAIL
1 1/2" = 1'-0"

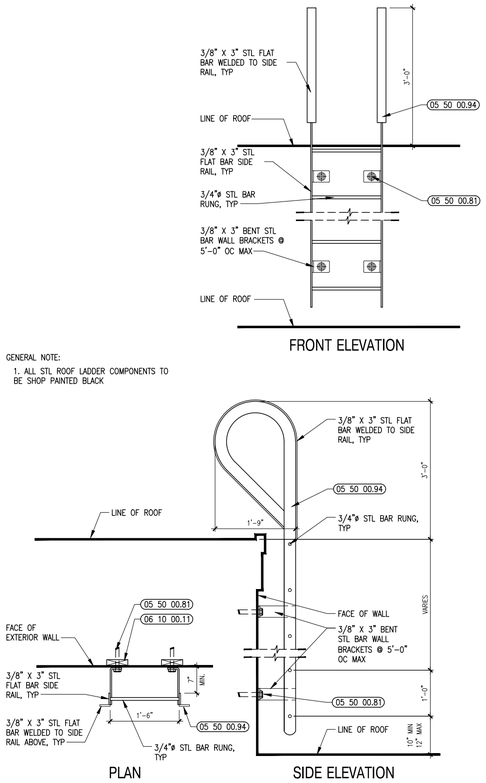

GENERAL NOTE:

1. ALL STL ROOF LADDER COMPONENTS TO BE SHOP PAINTED BLACK

2 EXTERIOR LADDER DETAILS
3/4" = 1'-0"

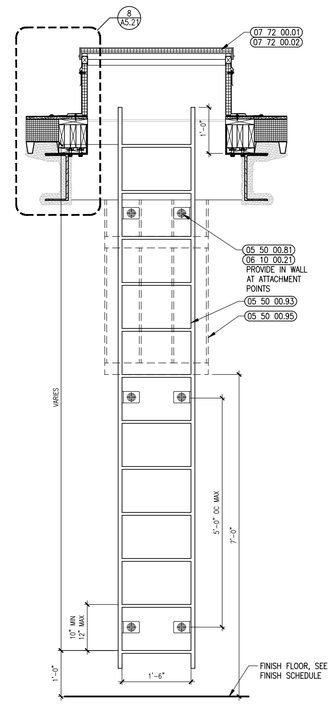

1 INTERIOR LADDER DETAIL
3/4" = 1'-0"

526 Boston Post Rd Wayland, MA
508.358.0790 www.ai3architects.com

BEVERLY MIDDLE SCHOOL

CABOT STREET
BEVERLY, MA 01915

Copyright © 2016 Ai3 Architects, LLC

KEYNOTE LEGEND: (REFERENCE SHEETS A0.01 & A0.02 FOR MASTER KEYNOTE LIST AND KEYNOTES NOT LISTED)

05 12 00.06	STEEL TUBE – SEE STRUCTURAL
05 12 00.16	STEEL CHANNEL – SEE STRUCTURAL
05 50 00.81	ANCHOR BOLT
05 50 00.93	ROOF ACCESS LADDER – INTERIOR
05 50 00.94	ROOF ACCESS LADDER – EXTERIOR
05 50 00.95	ROOF ACCESS LADDER CAGE
06 10 00.11	WOOD BLOCKING – 2X PRESSURE TREATED – SIZE AS NOTED OR DRAWN
06 10 00.21	WOOD BLOCKING – 2X FIRE RETARDANT TREATED – SIZE AS NOTED OR DRAWN
07 72 00.01	ROOF SCUTTLE – TYPE 1 – 3'-0" x 3'-0"
07 72 00.02	ROOF SCUTTLE – TYPE 2 – 3'-0" x 4'-6"
08 92 00.11	SCREEN BLADE
08 92 00.12	CLIP ANGLE
08 92 00.13	CONTINUOUS SUPPORT

90% CONSTRUCTION DOCUMENTS

NOT FOR CONSTRUCTION

NORTH ARROW

KEYPLAN

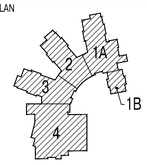

DRAWING NAME:

VERTICAL ROOF DETAILS

DRAWN BY:	RPM / JEQ
REVIEWED BY:	CLO
SCALE:	As Noted
JOB NO.:	1403.00
DATE:	July 25, 2016
DRAWING NUMBER:	A5.26

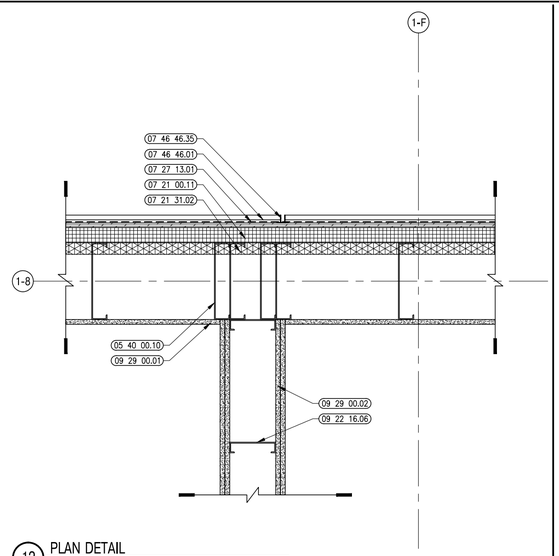

12 PLAN DETAIL
1-1/2"=1'-0"

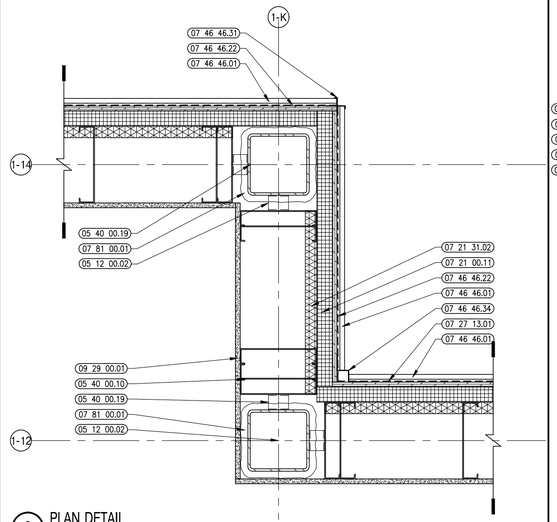

9 PLAN DETAIL
1-1/2"=1'-0"

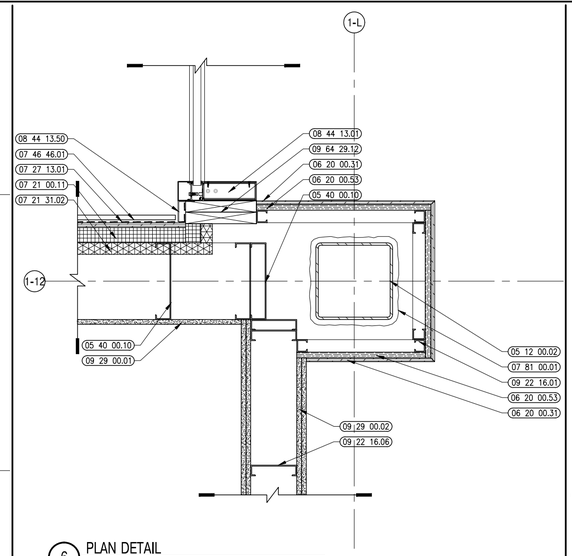

6 PLAN DETAIL
1-1/2"=1'-0"

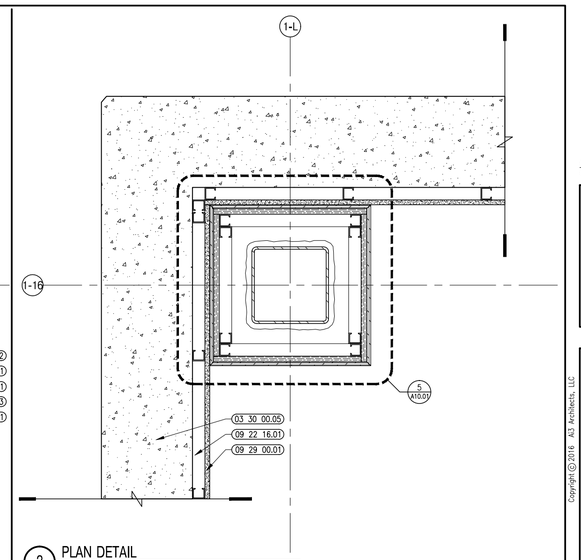

3 PLAN DETAIL
1-1/2"=1'-0"

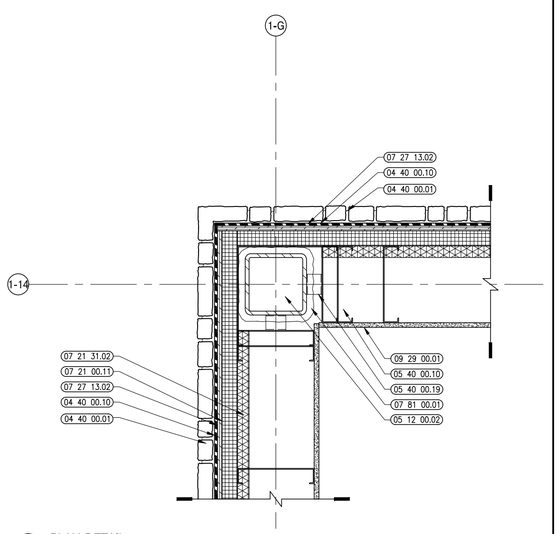

11 PLAN DETAIL
1-1/2"=1'-0"

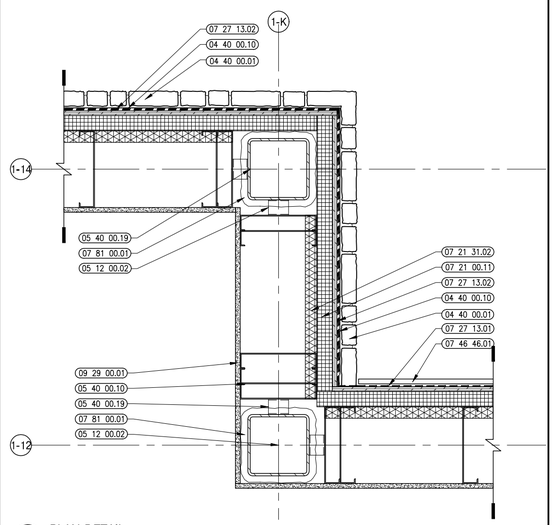

8 PLAN DETAIL
1-1/2"=1'-0"

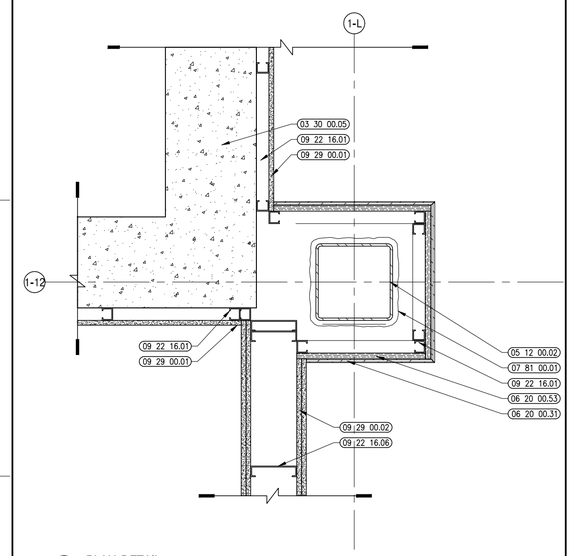

5 PLAN DETAIL
1-1/2"=1'-0"

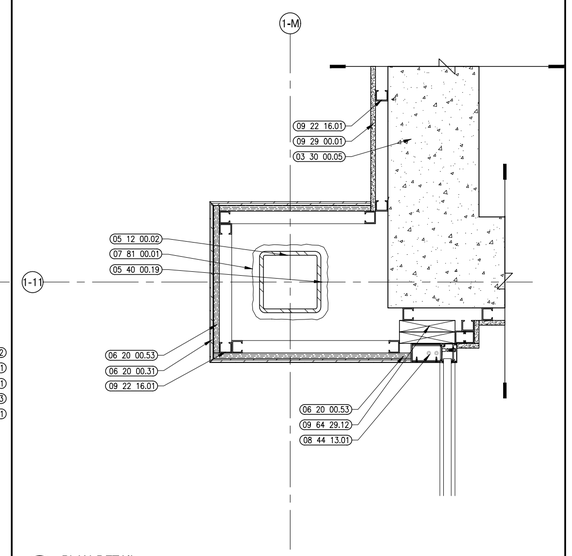

2 PLAN DETAIL
1-1/2"=1'-0"

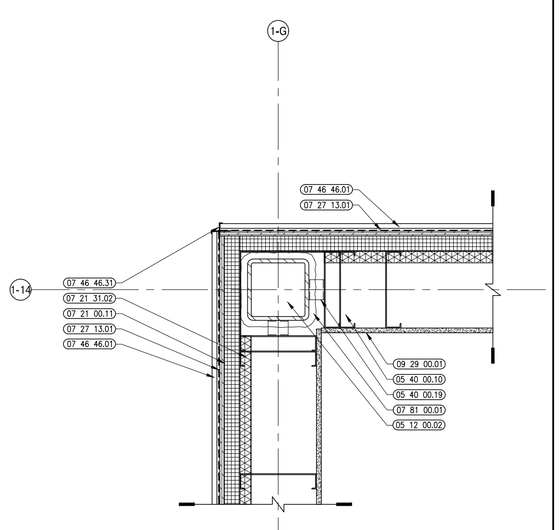

10 PLAN DETAIL
1-1/2"=1'-0"

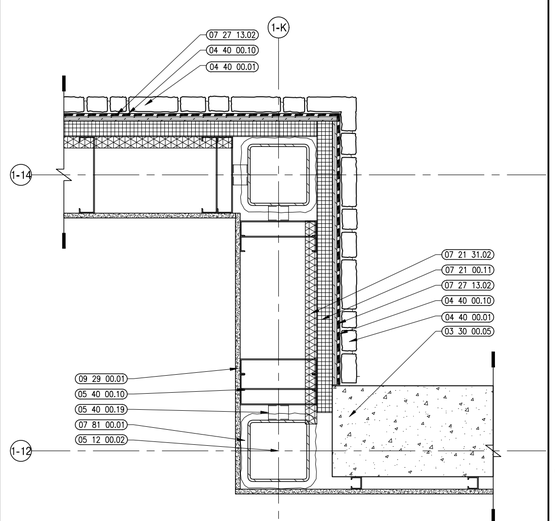

7 PLAN DETAIL
1-1/2"=1'-0"

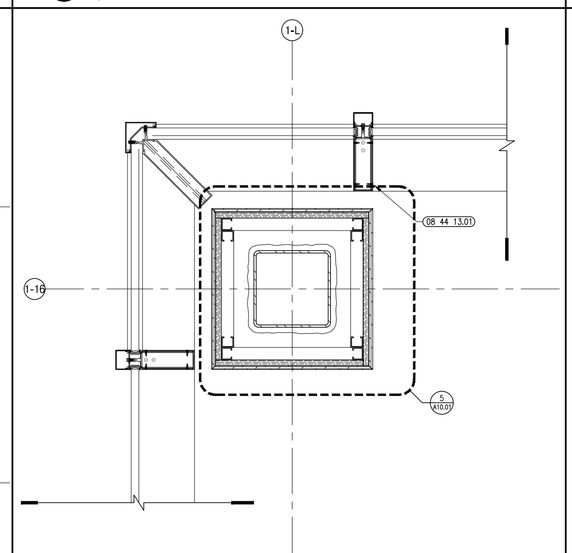

4 PLAN DETAIL
1-1/2"=1'-0"

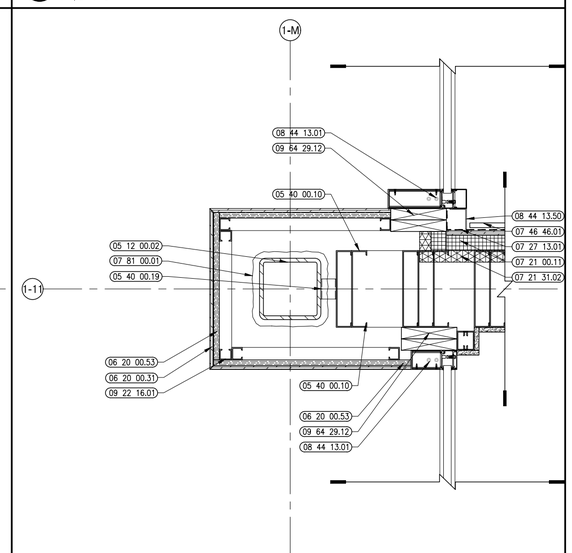

1 PLAN DETAIL
1-1/2"=1'-0"

A13 architects
526 Boston Post Rd Wayland, MA
508.358.0790 www.a13architects.com

BEVERLY MIDDLE SCHOOL

CABOT STREET
BEVERLY, MA 01915

Copyright © 2016 A13 Architects, LLC

KEYNOTE LEGEND: (REFERENCE SHEETS A0.01 & A0.02 FOR MASTER KEYNOTE LIST AND KEYNOTES NOT LISTED)

03 30 00.01	CONCRETE
03 30 00.05	CONCRETE FOUNDATION – SEE STRUCTURAL
04 40 00.01	STONE VENEER
04 40 00.10	GALVANIZED METAL LATH
04 73 16.10	GALVANIZED METAL LATH
05 12 00.02	STEEL COLUMN – SEE STRUCTURAL
05 40 00.02	STEEL STUDS – 2 1/2 INCH – 16 INCHES O.C. MAX
05 40 00.10	STEEL STUDS – 10 INCH – 16 INCHES O.C. MAX
05 40 00.19	STEEL Z-CLIP – 16 GAGE MIN. – 1 INCH MIN. DEPTH – 16 INCHES O.C. MAX
06 20 00.31	HARDWOOD VENEER PLYWOOD – 1/2 INCH – TRANSPARENT FINISH
06 20 00.53	MDF PLYWOOD – 3/4 INCH
07 21 00.11	INSULATING NAIL BASE – 2 INCH – EXTERIOR WALL
07 21 31.02	FOAM INSULATION – SPRAYED-IN-PLACE – 1-1/2 INCH DEPTH BETWEEN STUDS
07 27 13.01	AIR/VAPOR BARRIER MEMBRANE – SELF-ADHERING
07 27 13.02	AIR/VAPOR BARRIER MEMBRANE – SELF-ADHERING – 2 LAYERS
07 46 46.01	MINERAL FIBER CEMENT SIDING PANEL
07 46 46.22	SEALANT
07 46 46.31	OPEN OUTSIDE CORNER TRIM
07 46 46.34	INSIDE CORNER TRIM
07 46 46.35	BEAD REVEAL TRIM
07 81 00.01	CEMENTITIOUS FIREPROOFING
08 44 13.01	ALUMINUM CURTAIN WALL FRAME
09 22 16.01	METAL STUD 1-5/8 INCH – 16 INCHES O.C. MAX
09 22 16.06	METAL STUD 6 INCH – 16 INCHES O.C. MAX
09 29 00.01	5/8 INCH GYPSUM BOARD – LEVEL 4 FINISH
09 29 00.02	5/8 INCH GYPSUM BOARD – 2 LAYERS – LEVEL 4 FINISH
09 64 29.12	WOOD BLOCKING – SIZE AS REQUIRED

90% CONSTRUCTION DOCUMENTS

NOT FOR CONSTRUCTION

NORTH ARROW

KEYPLAN

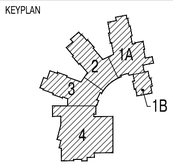

DRAWING NAME:

EXTERIOR PLAN DETAILS

DRAWN BY:	RPM
REVIEWED BY:	CLO
SCALE:	As Noted
JOB NO.:	1403.00
DATE:	July 25, 2016
DRAWING NUMBER:	A5.41

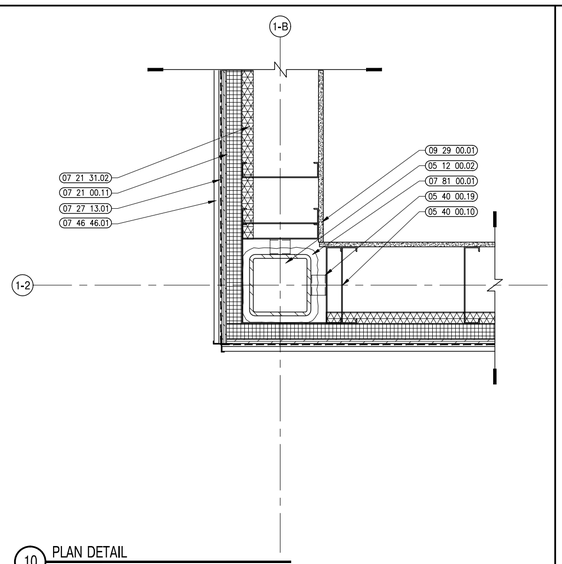

10 PLAN DETAIL
1-1/2"=1'-0"

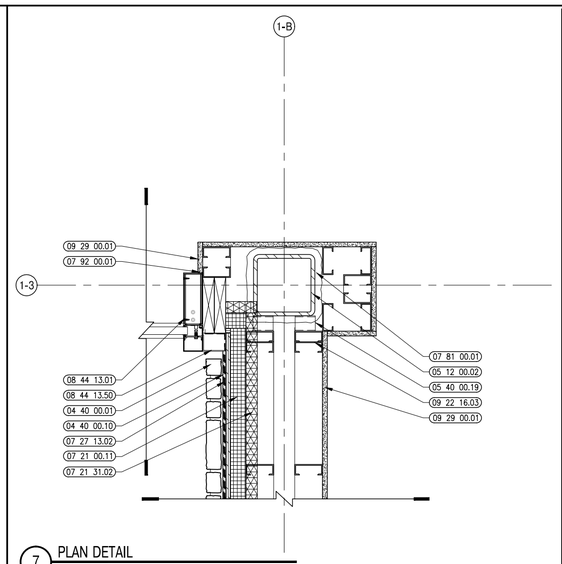

7 PLAN DETAIL
1-1/2"=1'-0"

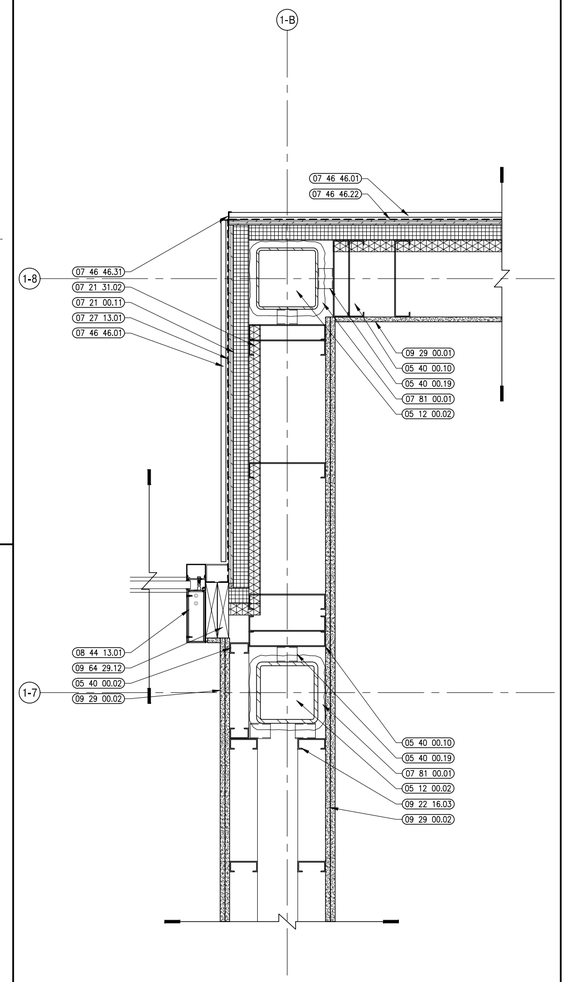

4 PLAN DETAIL
1-1/2"=1'-0"

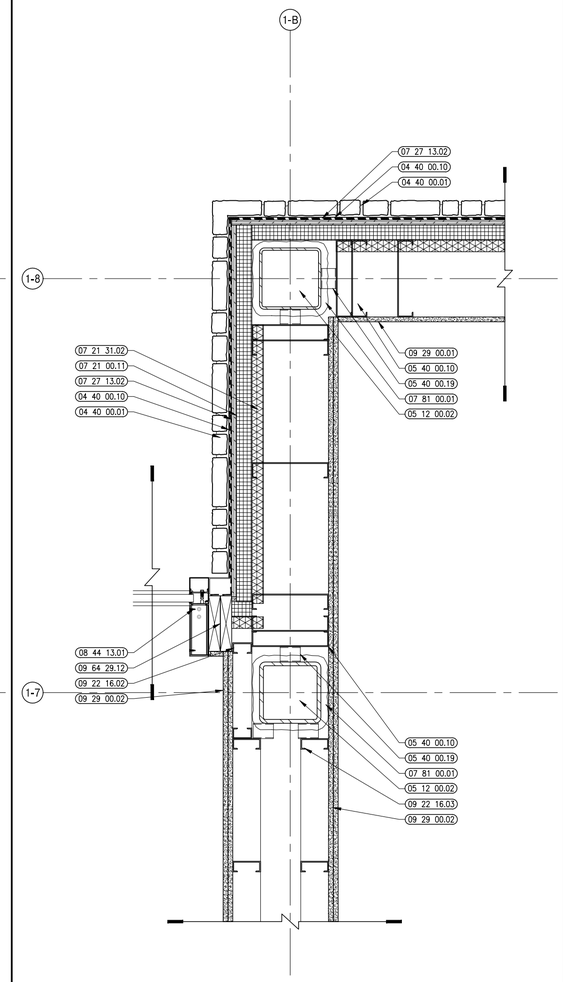

3 PLAN DETAIL
1-1/2"=1'-0"

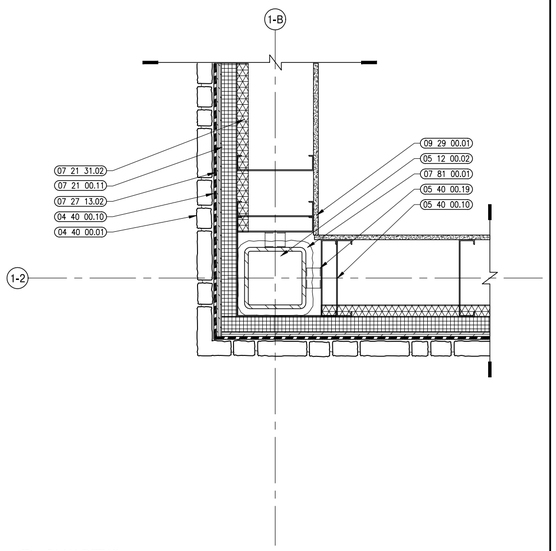

9 PLAN DETAIL
1-1/2"=1'-0"

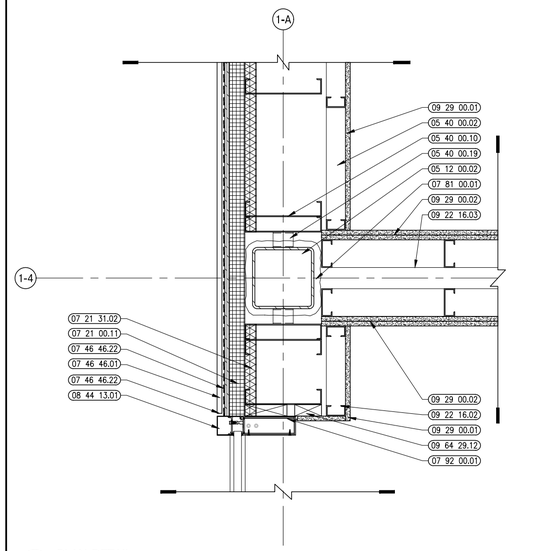

6 PLAN DETAIL
1-1/2"=1'-0"

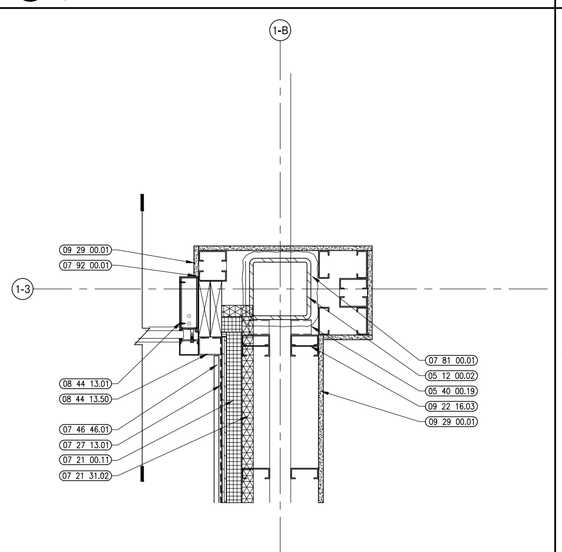

8 PLAN DETAIL
1-1/2"=1'-0"

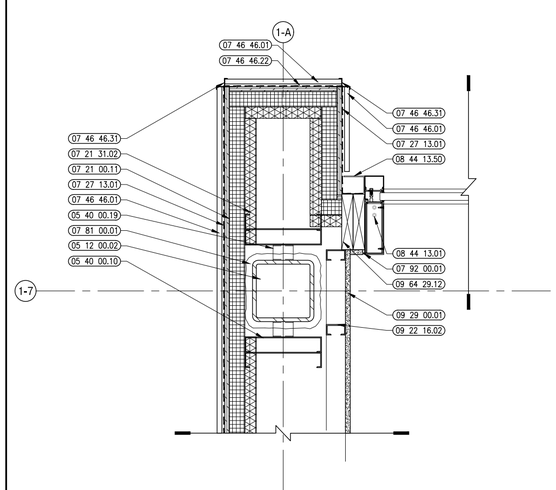

5 PLAN DETAIL
1-1/2"=1'-0"

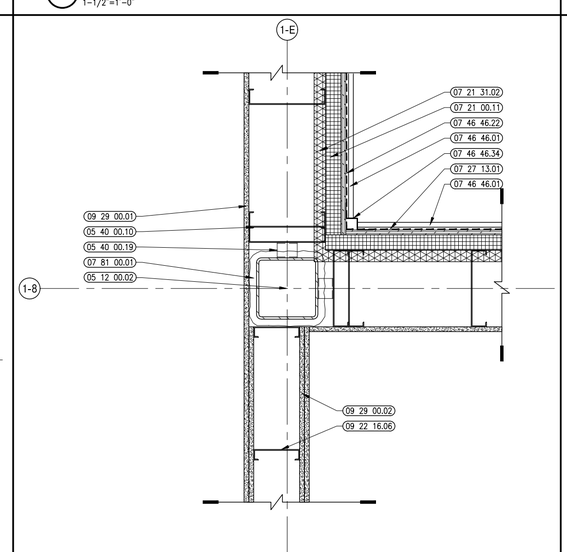

2 PLAN DETAIL
1-1/2"=1'-0"

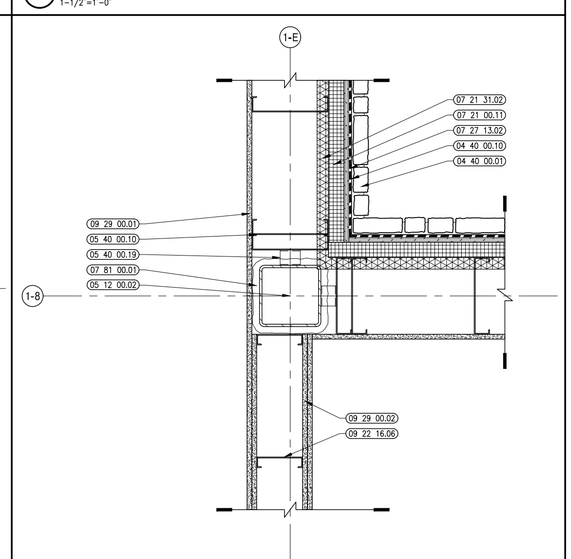

1 PLAN DETAIL
1-1/2"=1'-0"

A13 architects
526 Boston Post Rd Wayland, MA
508.358.0790 www.a13architects.com

BEVERLY MIDDLE SCHOOL

CABOT STREET
BEVERLY, MA 01915

Copyright © 2016 A13 Architects, LLC

KEYNOTE LEGEND: (REFERENCE SHEETS A0.01 & A0.02 FOR MASTER KEYNOTE LIST AND KEYNOTES NOT LISTED)

04 40 00.01	STONE VENEER
04 40 00.10	GALVANIZED METAL LATH
05 12 00.02	STEEL COLUMN – SEE STRUCTURAL
05 40 00.02	STEEL STUDS – 2 1/2 INCH – 16 INCHES O.C. MAX
05 40 00.10	STEEL STUDS – 10 INCH – 16 INCHES O.C. MAX
05 40 00.19	STEEL Z-CLIP – 16 GAGE MIN. – 1 INCH MIN. DEPTH – 16 INCHES O.C. MAX
07 21 00.11	INSULATING NAIL BASE – 2 INCH – EXTERIOR WALL
07 21 31.02	FOAM INSULATION – SPRAYED-IN-PLACE – 1-1/2 INCH DEPTH BETWEEN STUDS
07 27 13.01	AIR/VAPOR BARRIER MEMBRANE – SELF-ADHERING
07 27 13.02	AIR/VAPOR BARRIER MEMBRANE – SELF-ADHERING – 2 LAYERS
07 46 46.01	MINERAL FIBER CEMENT SIDING PANEL
07 46 46.22	SEALANT
07 46 46.31	OPEN OUTSIDE CORNER TRIM
07 46 46.34	INSIDE CORNER TRIM
07 81 00.01	CEMENTITIOUS FIREPROOFING
07 92 00.01	JOINT SEALANT – TYPE AS REQUIRED
08 44 13.01	ALUMINUM CURTAIN WALL FRAME
08 44 13.50	ALUMINUM BREAK METAL – 0.090 THICK MIN – CUSTOM COLOR TO MATCH CURTAIN WALL FRAMING
09 22 16.02	METAL STUD 2-1/2 INCH – 16 INCHES O.C. MAX
09 22 16.03	METAL STUD 3-5/8 INCH – 16 INCHES O.C. MAX
09 22 16.06	METAL STUD 6 INCH – 16 INCHES O.C. MAX
09 29 00.01	5/8 INCH GYPSUM BOARD – LEVEL 4 FINISH
09 29 00.02	5/8 INCH GYPSUM BOARD – 2 LAYERS – LEVEL 4 FINISH
09 64 29.12	WOOD BLOCKING – SIZE AS REQUIRED

90% CONSTRUCTION DOCUMENTS

NOT FOR CONSTRUCTION

NORTH ARROW

KEYPLAN

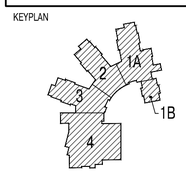

DRAWING NAME:

EXTERIOR PLAN DETAILS

DRAWN BY:	RPM
REVIEWED BY:	CLO
SCALE:	As Noted
JOB NO.:	1403.00
DATE:	July 25, 2016
DRAWING NUMBER:	A5.42

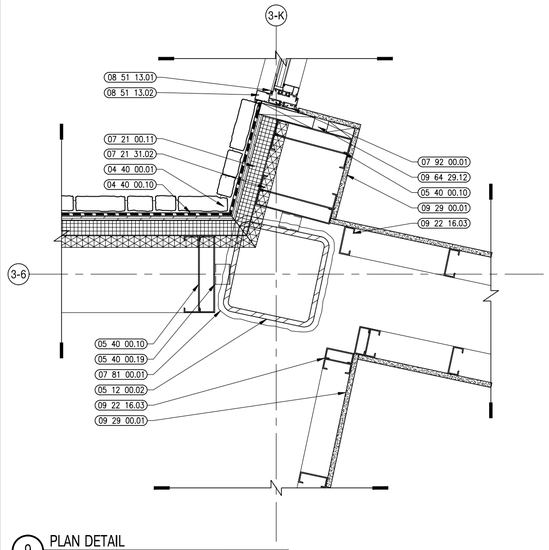

9 PLAN DETAIL
1-1/2"=1'-0"

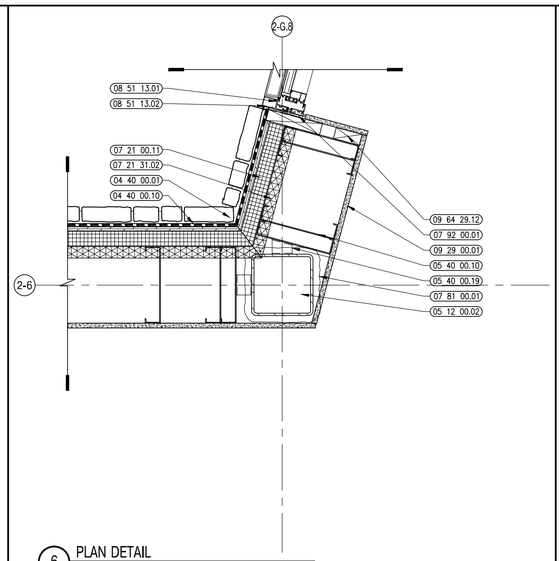

6 PLAN DETAIL
1-1/2"=1'-0"

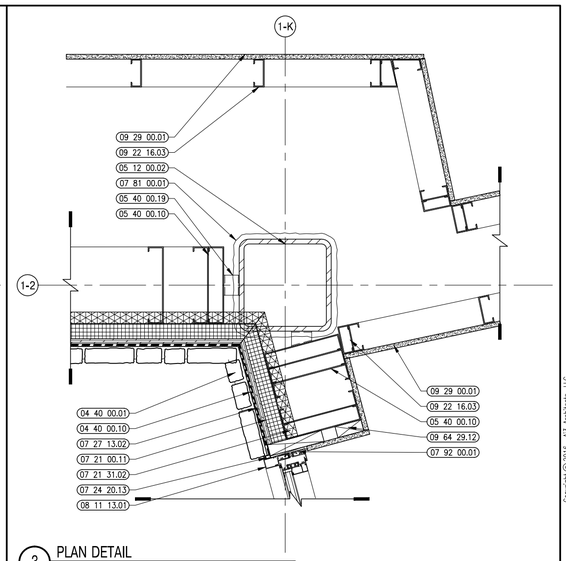

3 PLAN DETAIL
1-1/2"=1'-0"

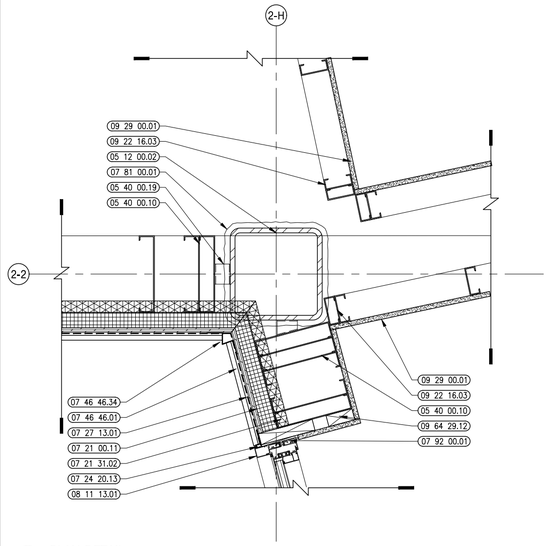

8 PLAN DETAIL
1-1/2"=1'-0"

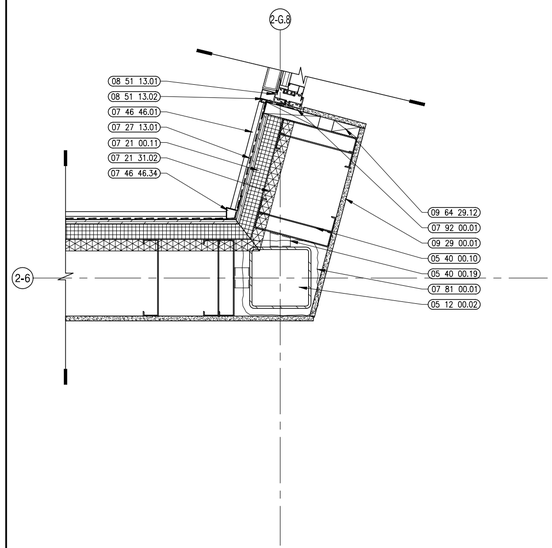

5 PLAN DETAIL
1-1/2"=1'-0"

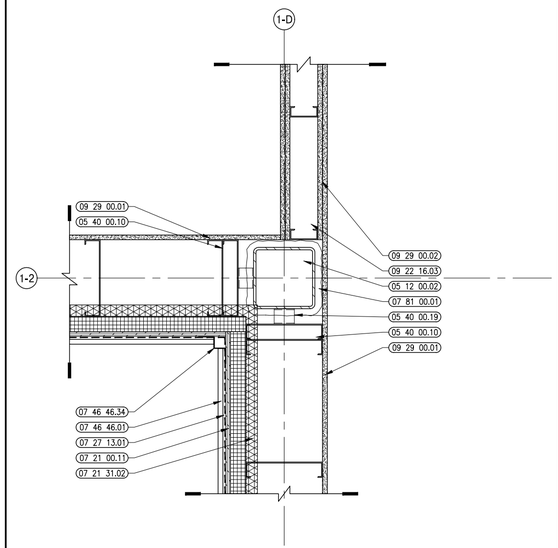

2 PLAN DETAIL
1-1/2"=1'-0"

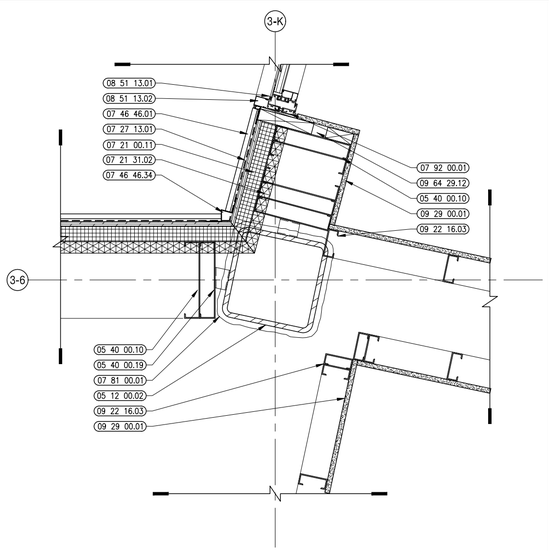

10 PLAN DETAIL
1-1/2"=1'-0"

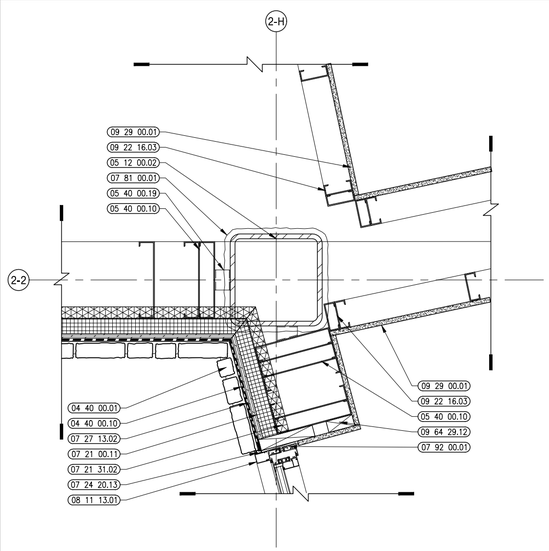

7 PLAN DETAIL
1-1/2"=1'-0"

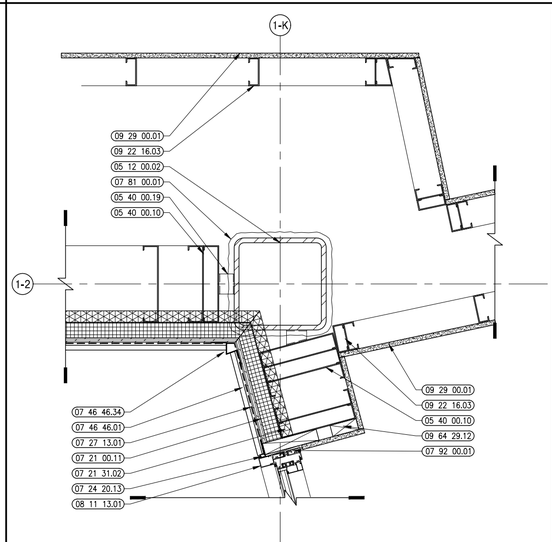

4 PLAN DETAIL
1-1/2"=1'-0"

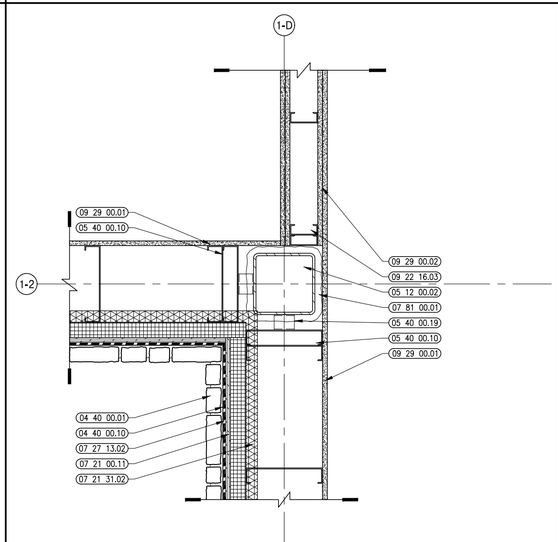

1 PLAN DETAIL
1-1/2"=1'-0"

526 Boston Post Rd Wayland, MA
508.358.0790 www.ai3architects.com

BEVERLY MIDDLE SCHOOL

CABOT STREET
BEVERLY, MA 01915

Copyright © 2016 Ai3 Architects, LLC

KEYNOTE LEGEND: (REFERENCE SHEETS A0.01 & A0.02 FOR MASTER KEYNOTE LIST AND KEYNOTES NOT LISTED)

04 40 00.01	STONE VENEER
04 40 00.10	GALVANIZED METAL LATH
05 12 00.02	STEEL COLUMN – SEE STRUCTURAL
05 40 00.10	STEEL STUDS – 10 INCH – 16 INCHES O.C. MAX
05 40 00.19	STEEL Z–CLIP – 16 GAGE MIN. – 1 INCH MIN. DEPTH – 16 INCHES O.C. MAX
07 21 00.11	INSULATING NAIL BASE – 2 INCH – EXTERIOR WALL
07 21 31.02	FOAM INSULATION – SPRAYED–IN–PLACE – 1–1/2 INCH DEPTH BETWEEN STUDS
07 24 20.13	BACKER ROD AND SEALANT – TYPE AS REQUIRED
07 27 13.01	AIR/VAPOR BARRIER MEMBRANE – SELF–ADHERING
07 27 13.02	AIR/VAPOR BARRIER MEMBRANE – SELF–ADHERING – 2 LAYERS
07 46 46.01	MINERAL FIBER CEMENT SIDING PANEL
07 46 46.34	INSIDE CORNER TRIM
07 81 00.01	CEMENTITIOUS FIREPROOFING
07 92 00.01	JOINT SEALANT – TYPE AS REQUIRED
08 11 13.01	DOOR AND FRAME– SEE DOOR SCHEDULE
08 51 13.01	ALUMINUM WINDOW – SEE SCHEDULE
08 51 13.02	PERIMETER SEALANT
09 22 16.03	METAL STUD 3–5/8 INCH – 16 INCHES O.C. MAX
09 29 00.01	5/8 INCH GYPSUM BOARD – LEVEL 4 FINISH
09 29 00.02	5/8 INCH GYPSUM BOARD – 2 LAYERS – LEVEL 4 FINISH
09 64 29.12	WOOD BLOCKING – SIZE AS REQUIRED

90% CONSTRUCTION DOCUMENTS

NOT FOR CONSTRUCTION

NORTH ARROW

KEYPLAN

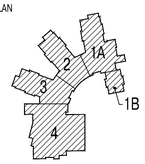

DRAWING NAME:

EXTERIOR PLAN DETAILS

DRAWN BY:	RPM
REVIEWED BY:	CLO
SCALE:	As Noted
JOB NO.:	1403.00
DATE:	July 25, 2016
DRAWING NUMBER:	A5.43

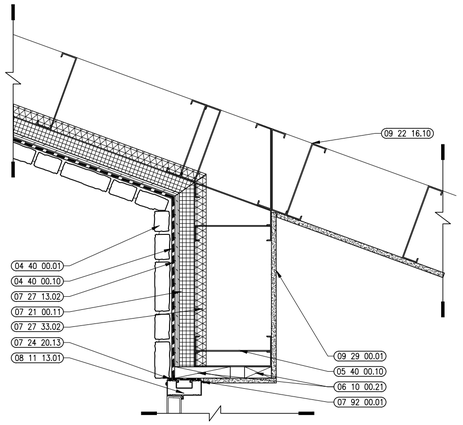

7 PLAN DETAIL
1-1/2"=1'-0"

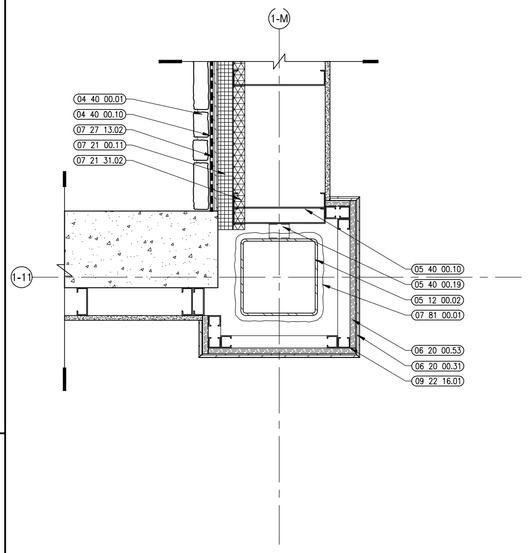

4 PLAN DETAIL
1-1/2"=1'-0"

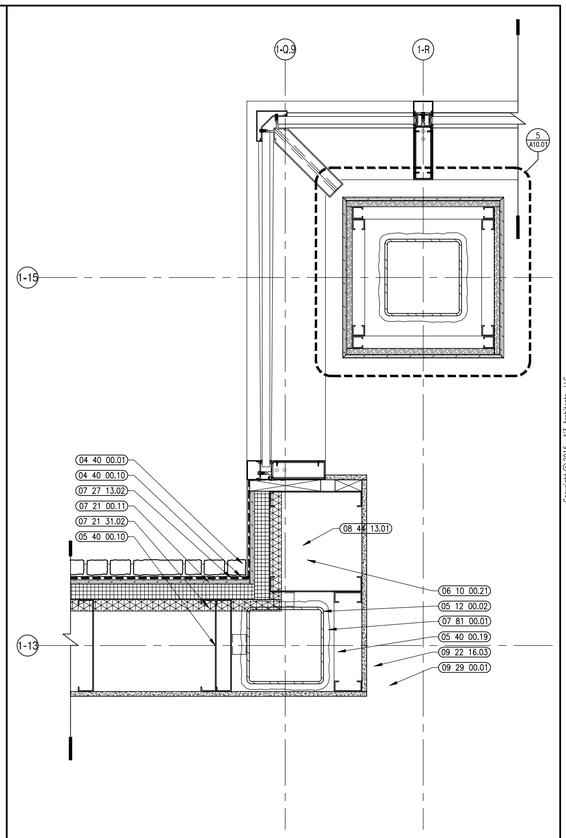

2 PLAN DETAIL
1-1/2"=1'-0"

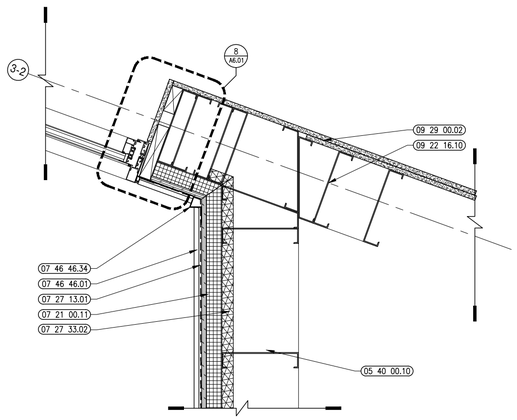

9 PLAN DETAIL
1-1/2"=1'-0"

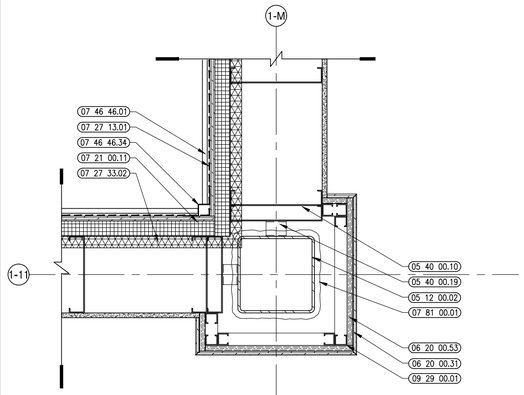

6 PLAN DETAIL
1-1/2"=1'-0"

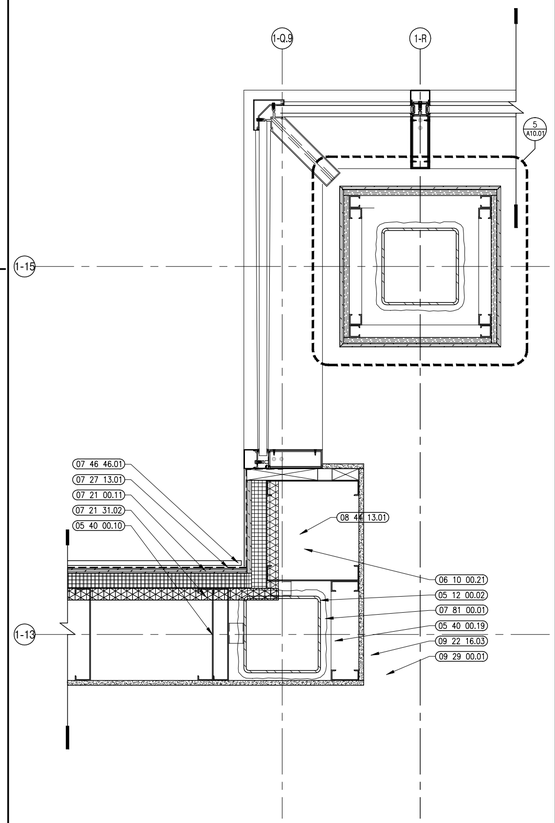

3 PLAN DETAIL
1-1/2"=1'-0"

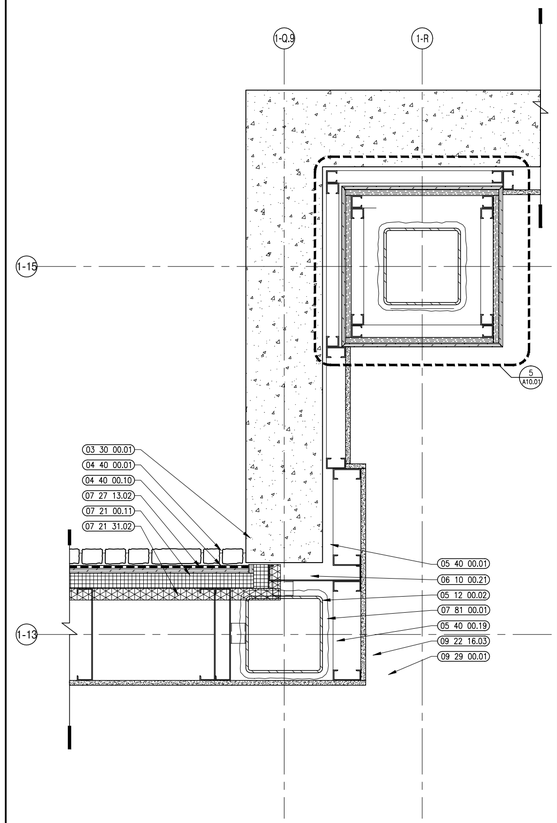

1 PLAN DETAIL
1-1/2"=1'-0"

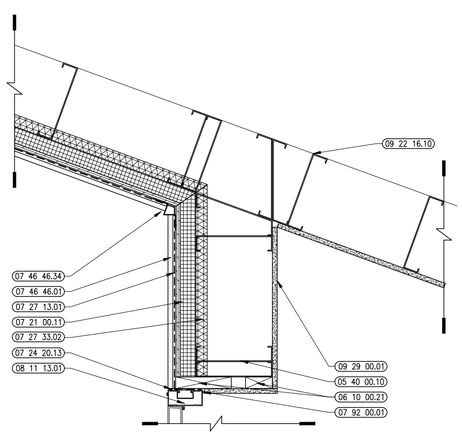

8 PLAN DETAIL
1-1/2"=1'-0"

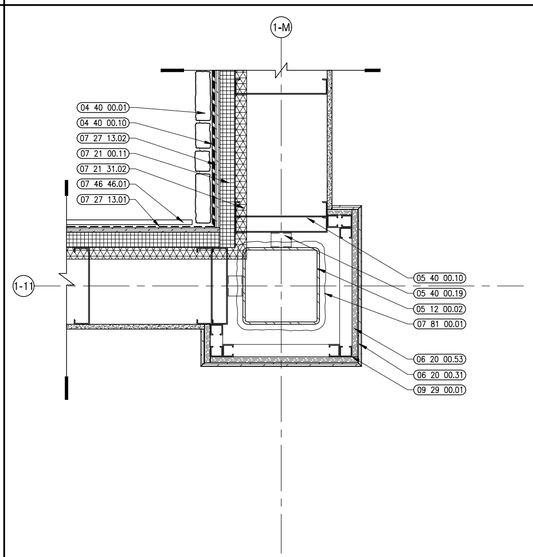

5 PLAN DETAIL
1-1/2"=1'-0"

Ai3 architects
526 Boston Post Rd Wayland, MA
508.358.0790 www.ai3architects.com

BEVERLY MIDDLE SCHOOL

CABOT STREET
BEVERLY, MA 01915

Copyright © 2016 Ai3 Architects, LLC

KEYNOTE LEGEND: (REFERENCE SHEETS A0.01 & A0.02 FOR MASTER KEYNOTE LIST AND KEYNOTES NOT LISTED)

03 30 00.01	CONCRETE
04 73 16.01	STONE VENEER
04 73 16.10	GALVANIZED METAL LATH
05 12 00.02	STEEL COLUMN – SEE STRUCTURAL
05 40 00.02	STEEL STUDS – 2 1/2 INCH – 16 INCHES O.C. MAX
05 40 00.03	STEEL STUDS – 3 5/8 INCH – 16 INCHES O.C. MAX
05 40 00.10	STEEL STUDS – 10 INCH – 16 INCHES O.C. MAX
05 40 00.19	STEEL Z-CLIP – 16 GAGE MIN. – 1 INCH MIN. DEPTH – 16 INCHES O.C. MAX
06 10 00.21	WOOD BLOCKING – 2X FIRE RETARDANT TREATED – SIZE AS NOTED OR DRAWN
06 20 00.31	HARDWOOD VENEER PLYWOOD – 1/2 INCH – TRANSPARENT FINISH
07 21 00.11	INSULATING NAIL BASE – 2 INCH – EXTERIOR WALL
07 24 20.13	BACKER ROD AND SEALANT – TYPE AS REQUIRED
07 27 13.01	AIR/VAPOR BARRIER MEMBRANE – SELF-ADHERING
07 27 13.02	AIR/VAPOR BARRIER MEMBRANE – SELF-ADHERING – 2 LAYERS
07 27 33.02	FOAM INSULATION – SPRAYED-IN-PLACE – 1-1/2 INCH DEPTH BETWEEN STUDS
07 46 46.01	MINERAL FIBER CEMENT SIDING PANEL
07 46 46.34	INSIDE CORNER TRIM
07 81 00.01	CEMENTITIOUS FIREPROOFING
07 92 00.01	JOINT SEALANT – TYPE AS REQUIRED
08 11 13.01	DOOR AND FRAME– SEE DOOR SCHEDULE
08 44 13.01	ALUMINUM CURTAIN WALL FRAME
09 29 00.01	5/8 INCH GYPSUM BOARD – LEVEL 4 FINISH

90% CONSTRUCTION DOCUMENTS

NOT FOR CONSTRUCTION

NORTH ARROW

KEYPLAN

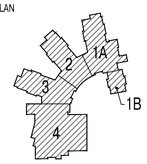

DRAWING NAME:

EXTERIOR PLAN DETAILS

DRAWN BY:	RPM
REVIEWED BY:	CLO
SCALE:	As Noted
JOB NO.:	1403.00
DATE:	July 25, 2016
DRAWING NUMBER:	A5.44

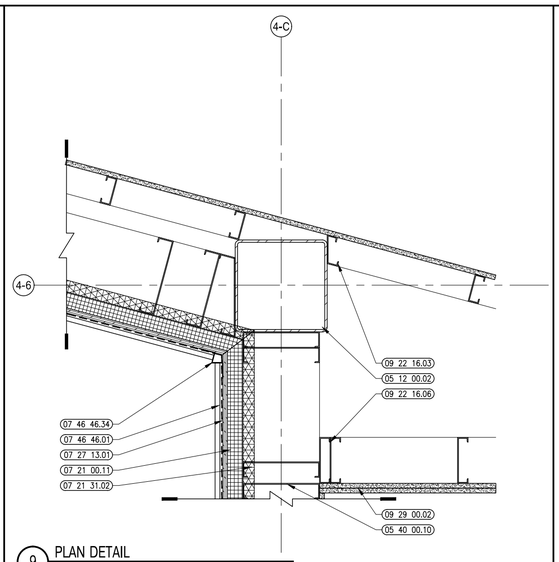

9 PLAN DETAIL
1-1/2"=1'-0"

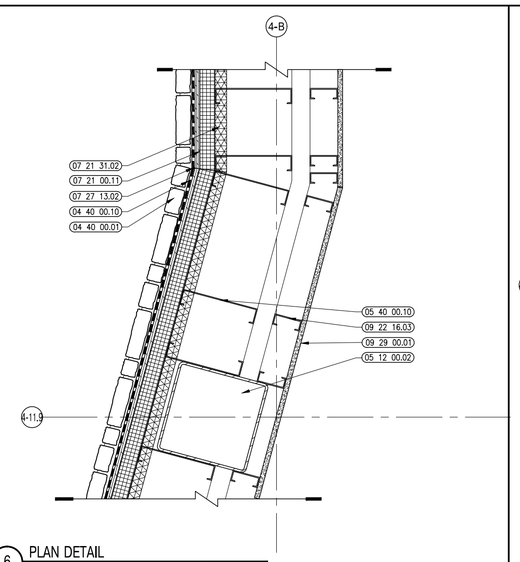

6 PLAN DETAIL
1-1/2"=1'-0"

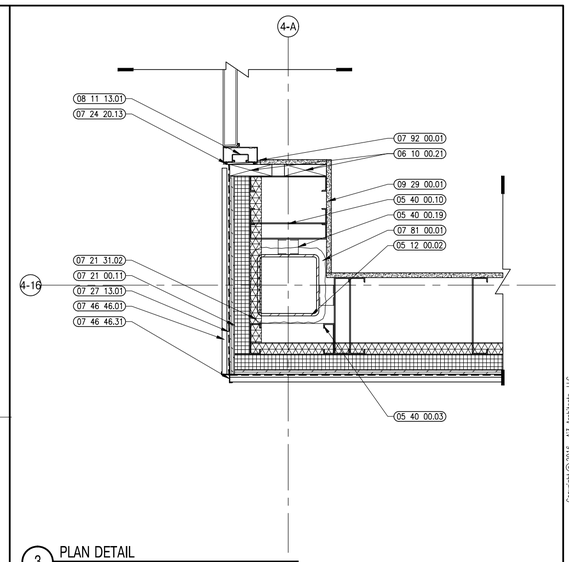

3 PLAN DETAIL
1-1/2"=1'-0"

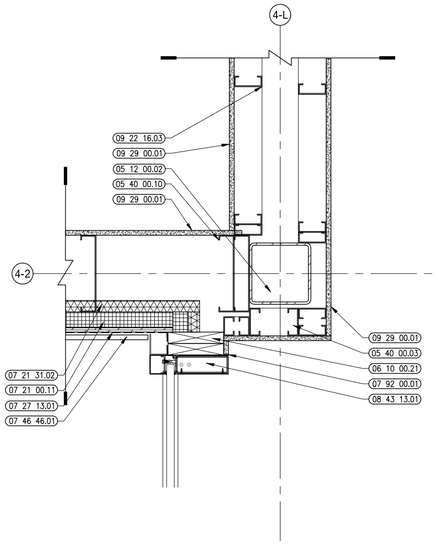

11 PLAN DETAIL
1-1/2"=1'-0"

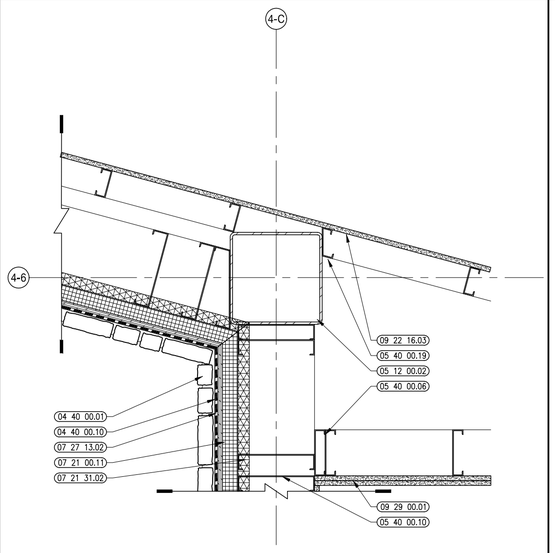

8 PLAN DETAIL
1-1/2"=1'-0"

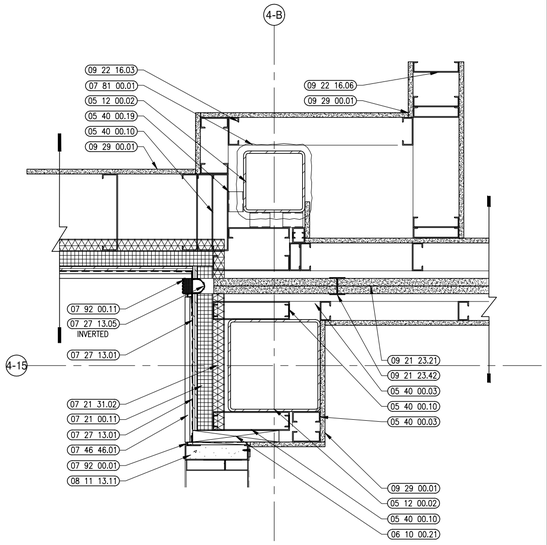

5 PLAN DETAIL
1-1/2"=1'-0"

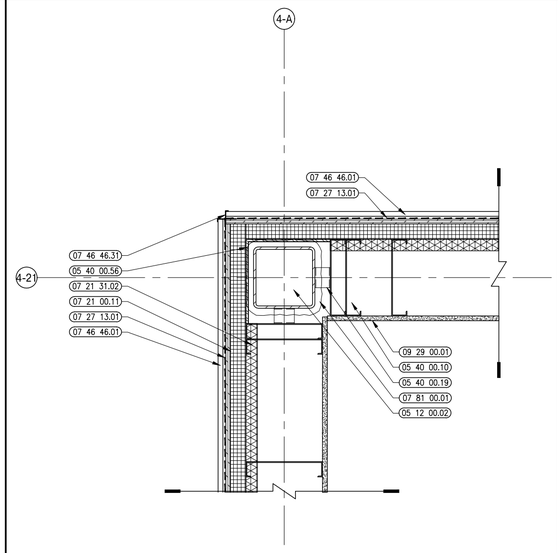

2 PLAN DETAIL
1-1/2"=1'-0"

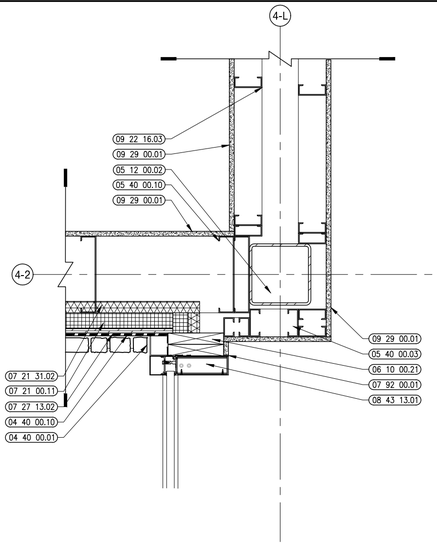

10 PLAN DETAIL
1-1/2"=1'-0"

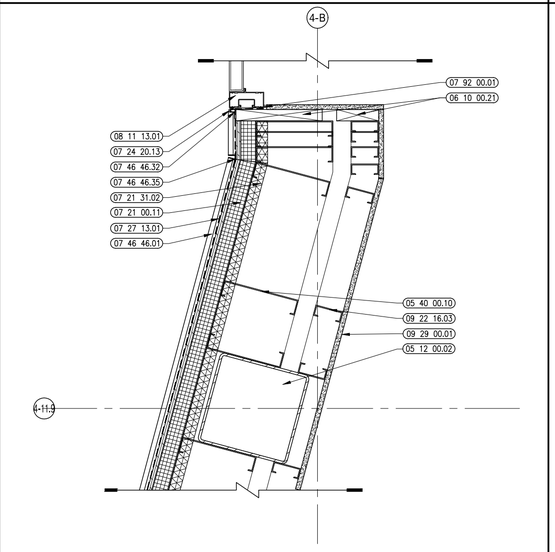

7 PLAN DETAIL
1-1/2"=1'-0"

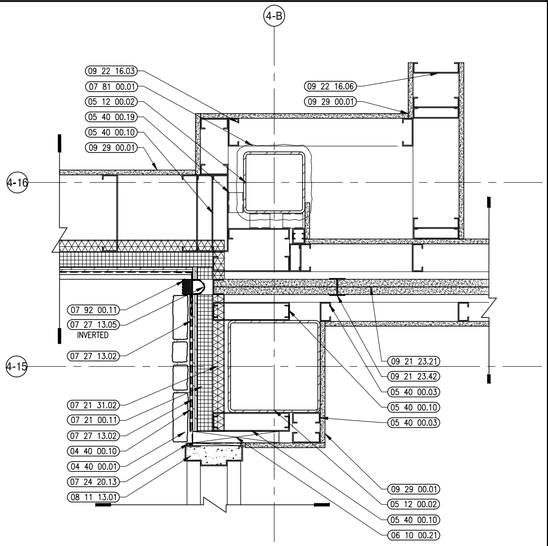

4 PLAN DETAIL
1-1/2"=1'-0"

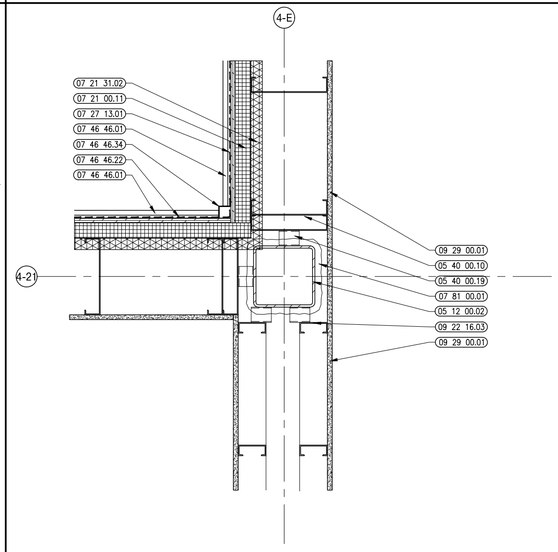

1 PLAN DETAIL
1-1/2"=1'-0"

A13 architects

526 Boston Post Rd Wayland, MA
508.358.0790 www.a13architects.com

BEVERLY MIDDLE SCHOOL

CABOT STREET
BEVERLY, MA 01915

Copyright © 2016 A13 Architects, LLC

KEYNOTE LEGEND: (REFERENCE SHEETS A0.01 & A0.02 FOR MASTER KEYNOTE LIST AND KEYNOTES NOT LISTED)

04 40 00.01	STONE VENEER
04 40 00.10	GALVANIZED METAL LATH
05 12 00.02	STEEL COLUMN – SEE STRUCTURAL
05 40 00.03	STEEL STUDS – 3 5/8 INCH – 16 INCHES O.C. MAX
05 40 00.06	STEEL STUDS – 6 INCH – 16 INCHES O.C. MAX
05 40 00.10	STEEL STUDS – 10 INCH – 16 INCHES O.C. MAX
05 40 00.19	STEEL Z-CLIP – 16 GAGE MIN. – 1 INCH MIN. DEPTH – 16 INCHES O.C. MAX
05 40 00.56	LIGHT GAGE BENT PLATE – SIZE AS REQUIRED
06 10 00.21	WOOD BLOCKING – 2X FIRE RETARDANT TREATED – SIZE AS NOTED OR DRAWN
07 21 00.11	INSULATING NAIL BASE – 2 INCH – EXTERIOR WALL
07 21 31.02	FOAM INSULATION – SPRAYED-IN-PLACE – 1-1/2 INCH DEPTH BETWEEN STUDS
07 24 20.13	BACKER ROD AND SEALANT – TYPE AS REQUIRED
07 27 13.01	AIR/VAPOR BARRIER MEMBRANE – SELF-ADHERING
07 27 13.02	AIR/VAPOR BARRIER MEMBRANE – SELF-ADHERING – 2 LAYERS
07 27 13.05	AIR/VAPOR BARRIER TRANSITION MEMBRANE – SELF-ADHERING
07 46 46.01	MINERAL FIBER CEMENT SIDING PANEL
07 46 46.22	SEALANT
07 46 46.31	OPEN OUTSIDE CORNER TRIM
07 46 46.32	SINGLE FLANGE SEALANT BACKER
07 46 46.34	INSIDE CORNER TRIM
07 46 46.35	BEAD REVEAL TRIM
07 81 00.01	CEMENTITIOUS FIREPROOFING
07 92 00.01	JOINT SEALANT – TYPE AS REQUIRED
07 92 00.11	EXTERIOR EXPANSION JOINT – 4 INCH
08 11 13.01	DOOR AND FRAME– SEE DOOR SCHEDULE
08 11 13.11	STEEL FRAME – SEE SCHEDULE FOR TYPES
08 43 13.01	ALUMINUM STOREFRONT FRAME
09 21 23.21	GYPSUM SHAFTWALL LINER PANEL – 1 INCH
09 21 23.42	METAL SHAFTWALL H STUD – 2 INCH
09 22 16.03	METAL STUD 3-5/8 INCH – 16 INCHES O.C. MAX
09 22 16.06	METAL STUD 6 INCH – 16 INCHES O.C. MAX
09 29 00.01	5/8 INCH GYPSUM BOARD – LEVEL 4 FINISH
09 29 00.02	5/8 INCH GYPSUM BOARD – 2 LAYERS – LEVEL 4 FINISH

90% CONSTRUCTION DOCUMENTS

NOT FOR CONSTRUCTION

NORTH ARROW

KEYPLAN

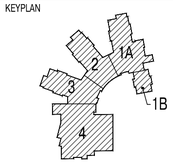

DRAWING NAME:

EXTERIOR PLAN DETAILS

DRAWN BY: RPM

REVIEWED BY: CLO

SCALE: As Noted

JOB NO.: 1403.00

DATE: July 25, 2016

DRAWING NUMBER: A5.45

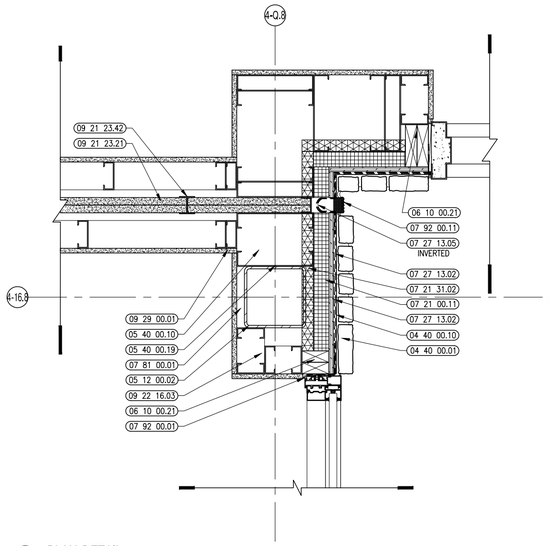

12 PLAN DETAIL
1-1/2"=1'-0"

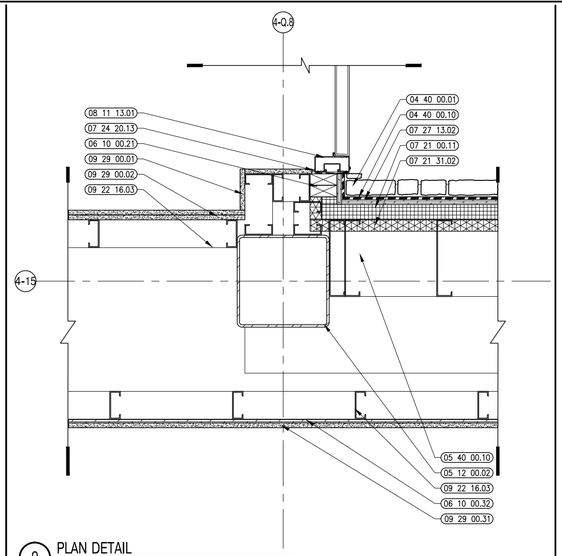

9 PLAN DETAIL
1-1/2"=1'-0"

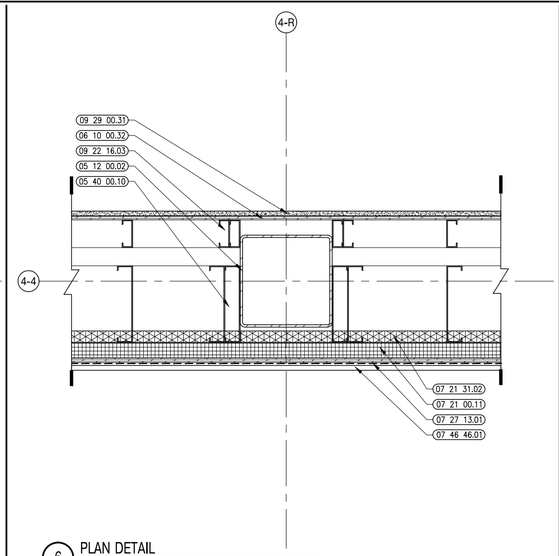

6 PLAN DETAIL
1-1/2"=1'-0"

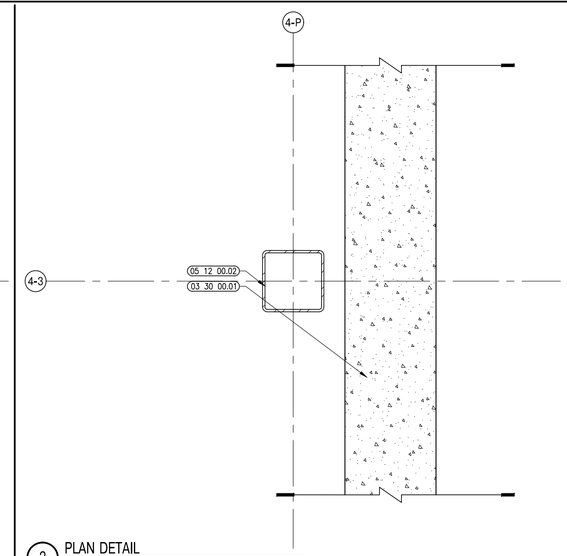

3 PLAN DETAIL
1-1/2"=1'-0"

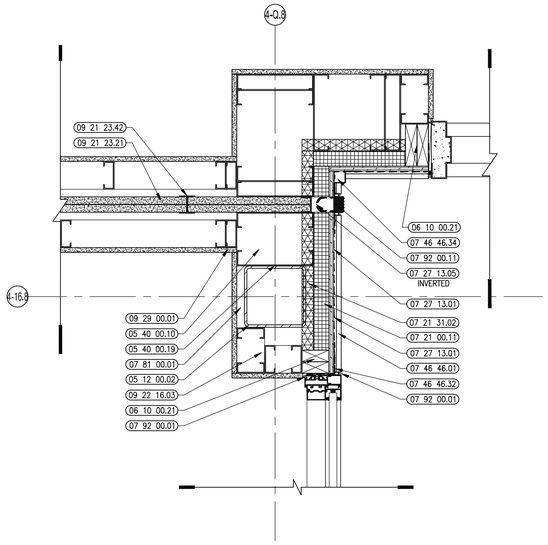

11 PLAN DETAIL
1-1/2"=1'-0"

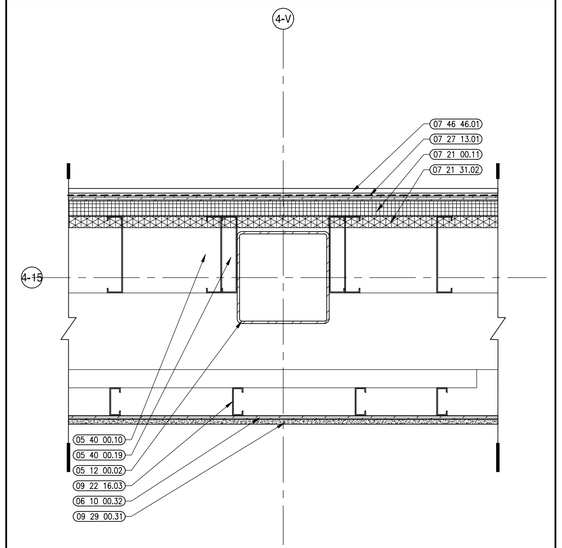

8 PLAN DETAIL
1-1/2"=1'-0"

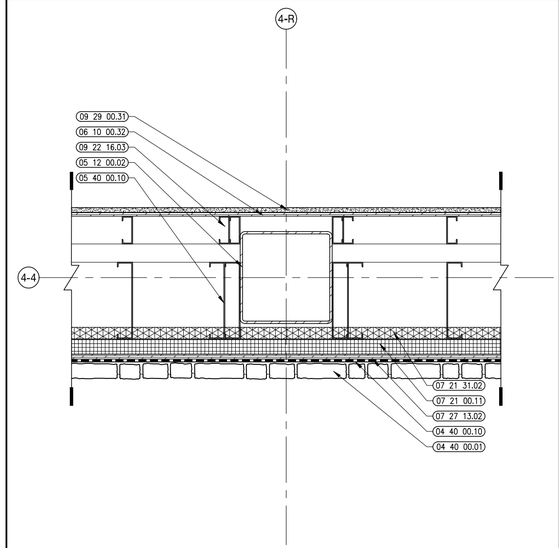

5 PLAN DETAIL
1-1/2"=1'-0"

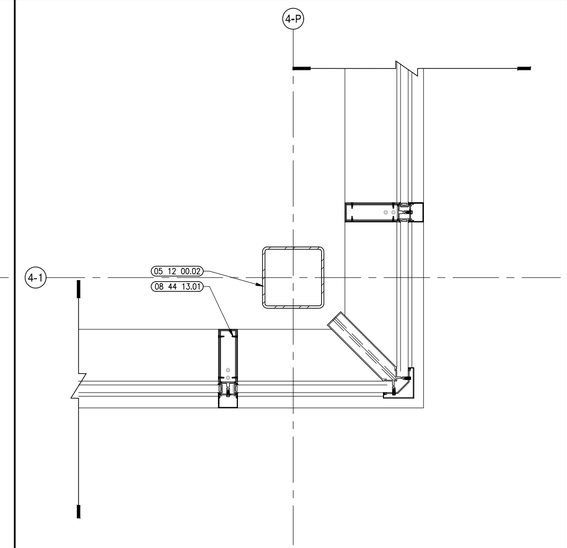

2 PLAN DETAIL
1-1/2"=1'-0"

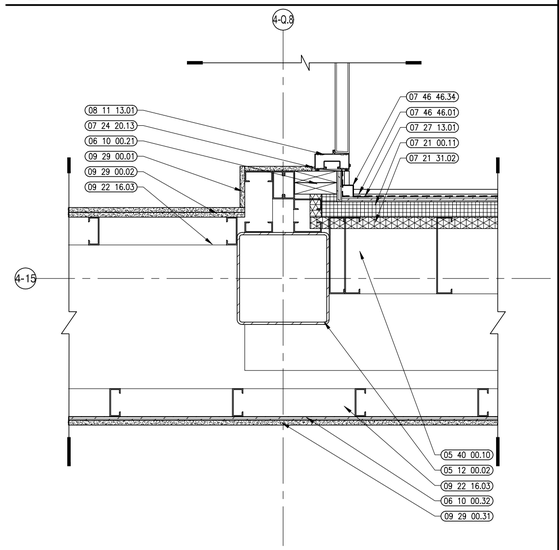

10 PLAN DETAIL
1-1/2"=1'-0"

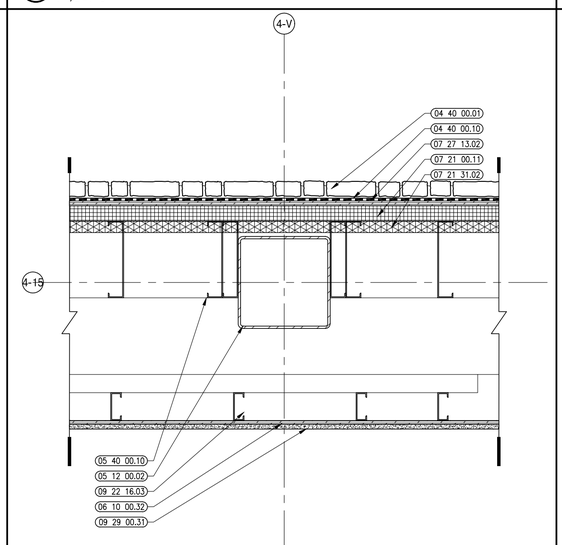

7 PLAN DETAIL
1-1/2"=1'-0"

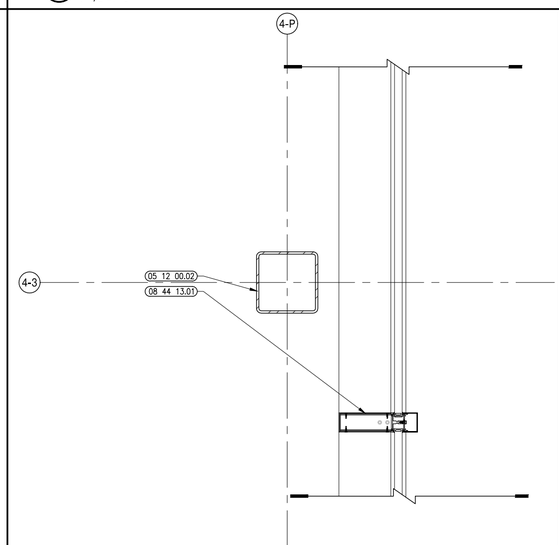

4 PLAN DETAIL
1-1/2"=1'-0"

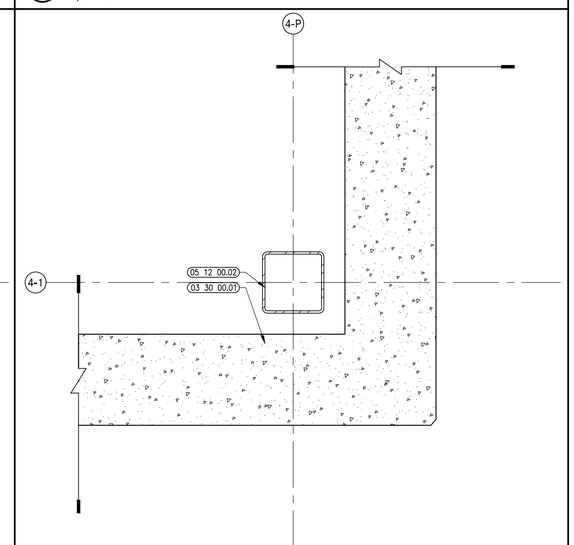

1 PLAN DETAIL
1-1/2"=1'-0"

A13 architects
526 Boston Post Rd Wayland, MA
508.358.0790 www.a13architects.com

BEVERLY MIDDLE SCHOOL

CABOT STREET
BEVERLY, MA 01915

Copyright © 2016 A13 Architects, LLC

KEYNOTE LEGEND: (REFERENCE SHEETS A0.01 & A0.02 FOR MASTER KEYNOTE LIST AND KEYNOTES NOT LISTED)

03 30 00.01	CONCRETE
04 40 00.01	STONE VENEER
04 40 00.10	GALVANIZED METAL LATH
05 12 00.02	STEEL COLUMN – SEE STRUCTURAL
05 40 00.10	STEEL STUDS – 10 INCH – 16 INCHES O.C. MAX
05 40 00.19	STEEL Z-CLIP – 16 GAGE MIN. – 1 INCH MIN. DEPTH – 16 INCHES O.C. MAX
06 10 00.21	WOOD BLOCKING – 2X FIRE RETARDANT TREATED – SIZE AS NOTED OR DRAWN
06 10 00.32	PLYWOOD – 1/2 INCH
07 21 00.11	INSULATING NAIL BASE – 2 INCH – EXTERIOR WALL
07 21 31.02	FOAM INSULATION – SPRAYED-IN-PLACE – 1-1/2 INCH DEPTH BETWEEN STUDS
07 24 20.13	BACKER ROD AND SEALANT – TYPE AS REQUIRED
07 27 13.01	AIR/VAPOR BARRIER MEMBRANE – SELF-ADHERING
07 27 13.02	AIR/VAPOR BARRIER MEMBRANE – SELF-ADHERING – 2 LAYERS
07 27 13.05	AIR/VAPOR BARRIER TRANSITION MEMBRANE – SELF-ADHERING
07 46 46.01	MINERAL FIBER CEMENT SIDING PANEL
07 46 46.32	SINGLE FLANGE SEALANT BACKER
07 46 46.34	INSIDE CORNER TRIM
07 81 00.01	CEMENTITIOUS FIREPROOFING
07 92 00.01	JOINT SEALANT – TYPE AS REQUIRED
07 92 00.11	EXTERIOR EXPANSION JOINT – 4 INCH
08 11 13.01	DOOR AND FRAME– SEE DOOR SCHEDULE
08 44 13.01	ALUMINUM CURTAIN WALL FRAME
09 21 23.21	GYPSUM SHAFTWALL LINER PANEL – 1 INCH
09 21 23.42	METAL SHAFTWALL H STUD – 2 INCH
09 22 16.03	METAL STUD 3-5/8 INCH – 16 INCHES O.C. MAX
09 29 00.01	5/8 INCH GYPSUM BOARD – LEVEL 4 FINISH
09 29 00.02	5/8 INCH GYPSUM BOARD – 2 LAYERS – LEVEL 4 FINISH
09 29 00.31	5/8 INCH GYPSUM BOARD – IMPACT RESISTANT – LEVEL 4 FINISH

90% CONSTRUCTION DOCUMENTS

NOT FOR CONSTRUCTION

NORTH ARROW

KEYPLAN

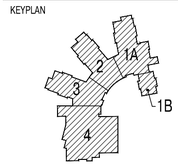

DRAWING NAME:

EXTERIOR PLAN DETAILS

DRAWN BY:	RPM
REVIEWED BY:	CLO
SCALE:	As Noted
JOB NO.:	1403.00
DATE:	July 25, 2016
DRAWING NUMBER:	A5.46

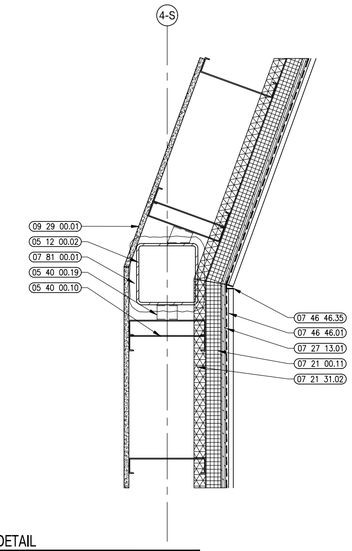

4 PLAN DETAIL
1-1/2"=1'-0"

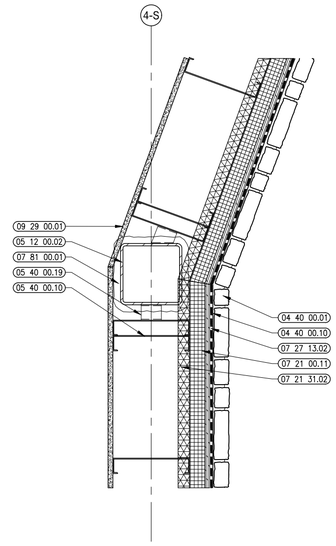

3 PLAN DETAIL
1-1/2"=1'-0"

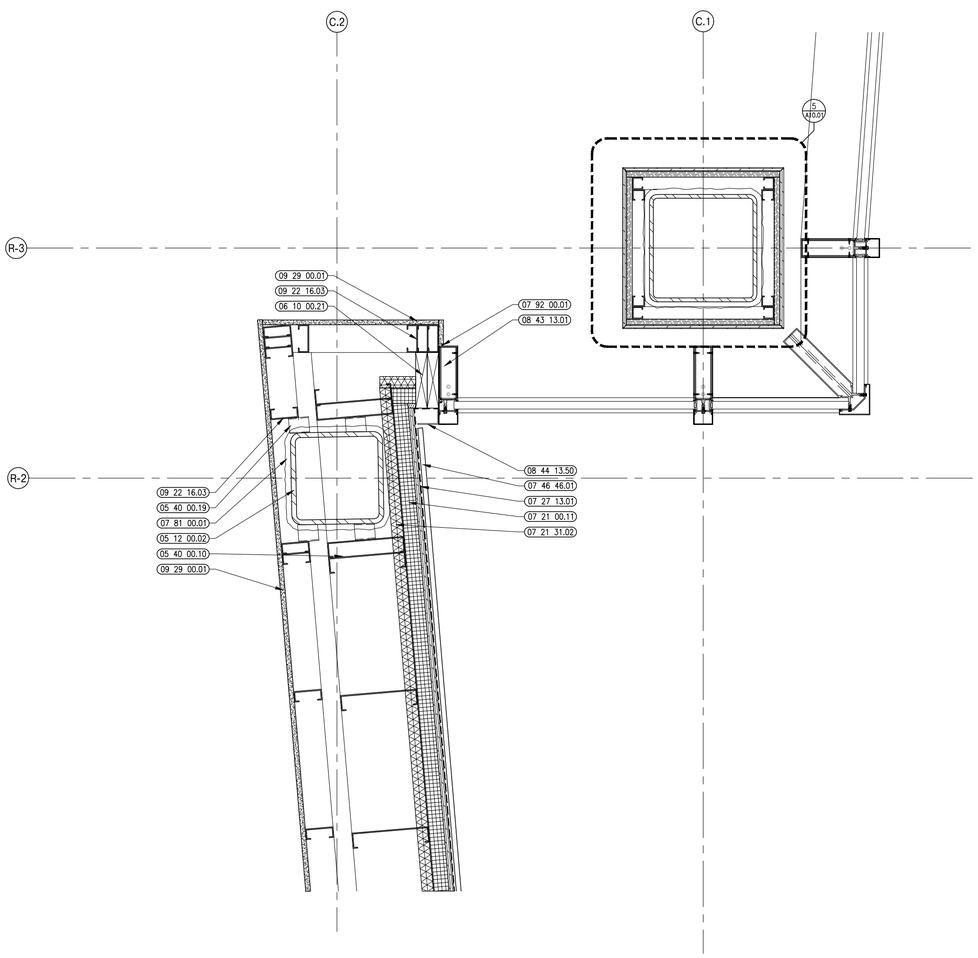

2 PLAN DETAIL
1-1/2"=1'-0"

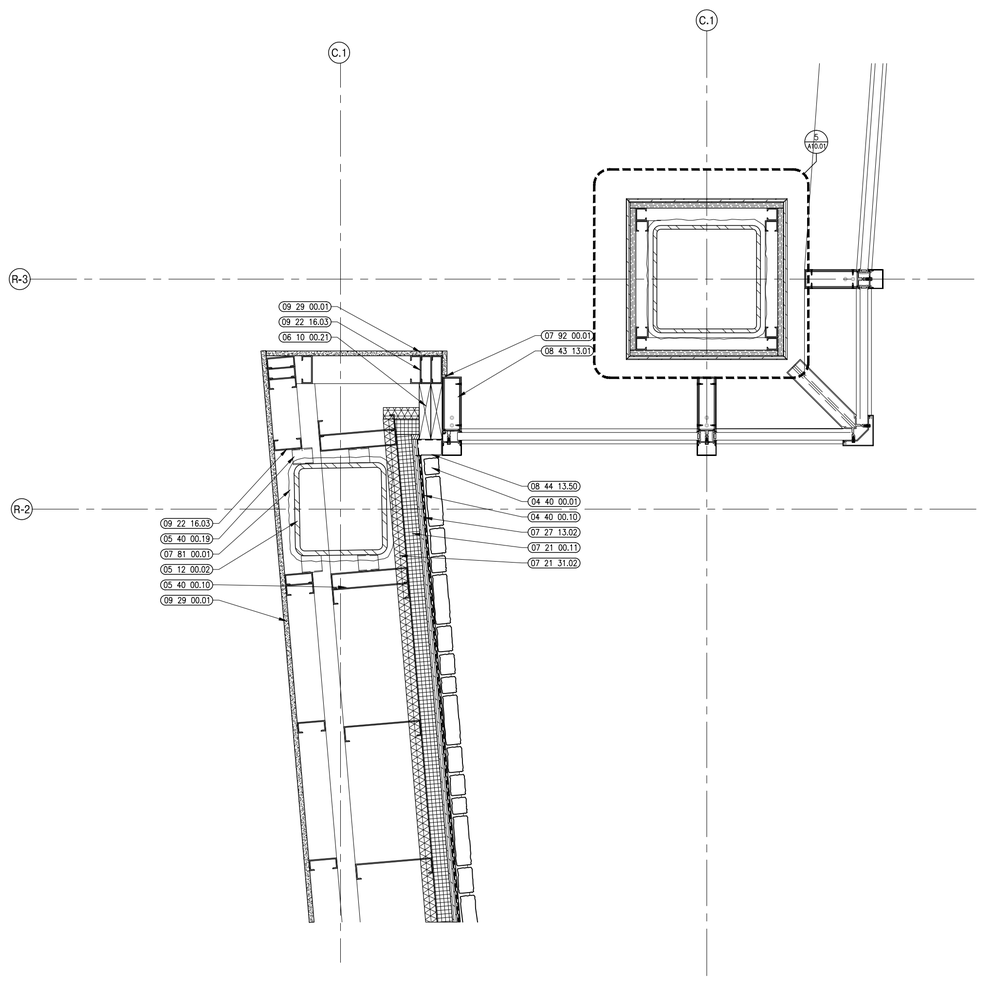

1 PLAN DETAIL
1-1/2"=1'-0"

ai3 architects

526 Boston Post Rd Wayland, MA
508.358.0790 www.ai3architects.com

BEVERLY MIDDLE SCHOOL

CABOT STREET
BEVERLY, MA 01915

Copyright © 2016 AI3 Architects, LLC

KEYNOTE LEGEND: (REFERENCE SHEETS A0.01 & A0.02 FOR MASTER KEYNOTE LIST AND KEYNOTES NOT LISTED)

04 40 00.01	STONE VENEER
04 40 00.10	GALVANIZED METAL LATH
05 12 00.02	STEEL COLUMN – SEE STRUCTURAL
05 40 00.10	STEEL STUDS – 10 INCH – 16 INCHES O.C. MAX
05 40 00.19	STEEL Z-CLIP – 16 GAGE MIN. – 1 INCH MIN. DEPTH – 16 INCHES O.C. MAX
06 10 00.21	WOOD BLOCKING – 2X FIRE RETARDANT TREATED – SIZE AS NOTED OR DRAWN
07 21 00.11	INSULATING NAIL BASE – 2 INCH – EXTERIOR WALL
07 21 31.02	FOAM INSULATION – SPRAYED-IN-PLACE – 1-1/2 INCH DEPTH BETWEEN STUDS
07 27 13.01	AIR/VAPOR BARRIER MEMBRANE – SELF-ADHERING
07 27 13.02	AIR/VAPOR BARRIER MEMBRANE – SELF-ADHERING – 2 LAYERS
07 46 46.01	MINERAL FIBER CEMENT SIDING PANEL
07 46 46.35	BEAD REVEAL TRIM
07 81 00.01	CEMENTITIOUS FIREPROOFING
07 92 00.01	JOINT SEALANT – TYPE AS REQUIRED
08 43 13.01	ALUMINUM STOREFRONT FRAME
08 44 13.50	ALUMINUM BREAK METAL – 0.090 THICK MIN – CUSTOM COLOR TO MATCH CURTAIN WALL FRAMING
09 22 16.03	METAL STUD 3-5/8 INCH – 16 INCHES O.C. MAX
09 29 00.01	5/8 INCH GYPSUM BOARD – LEVEL 4 FINISH

90% CONSTRUCTION DOCUMENTS

NOT FOR CONSTRUCTION

NORTH ARROW

KEYPLAN

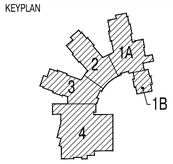

DRAWING NAME:

EXTERIOR PLAN DETAILS

DRAWN BY:	RPM
REVIEWED BY:	CLO
SCALE:	As Noted
JOB NO.:	1403.00
DATE:	July 25, 2016
DRAWING NUMBER:	A5.47

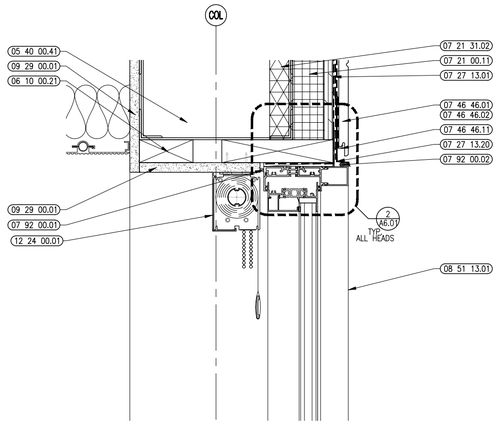

7 HEAD DETAIL
3" = 1'-0"

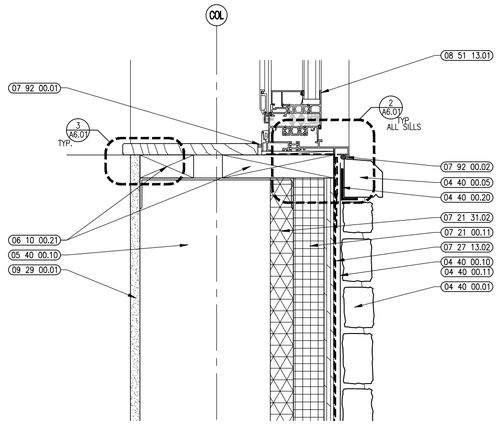

5 SILL DETAIL
3" = 1'-0"

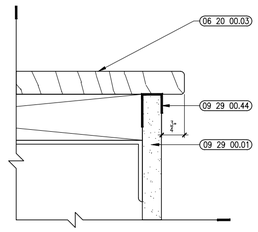

3 TYPICAL SILL DETAIL
6" = 1'-0"

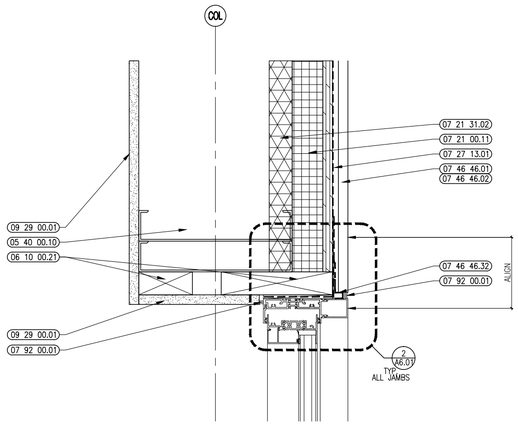

8 JAMB DETAIL
3" = 1'-0"

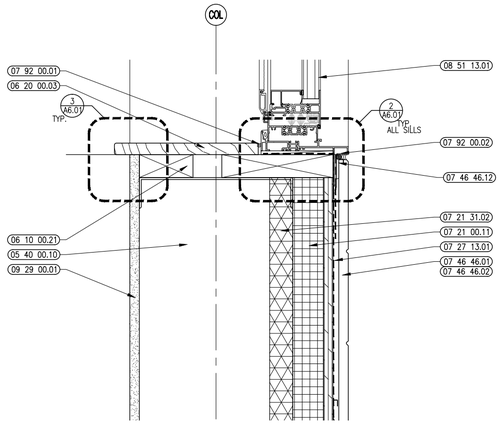

6 SILL DETAIL
3" = 1'-0"

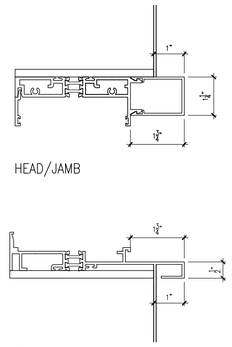

4 WINDOW RECEPTOR DETAIL (08 51 13.31)
N.T.S.

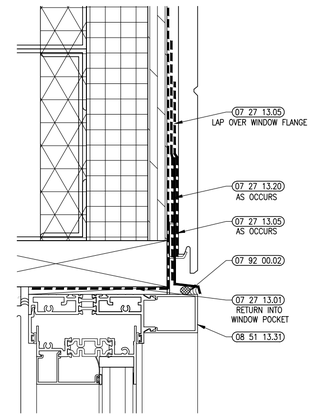

2 TYPICAL AVB TIE-IN

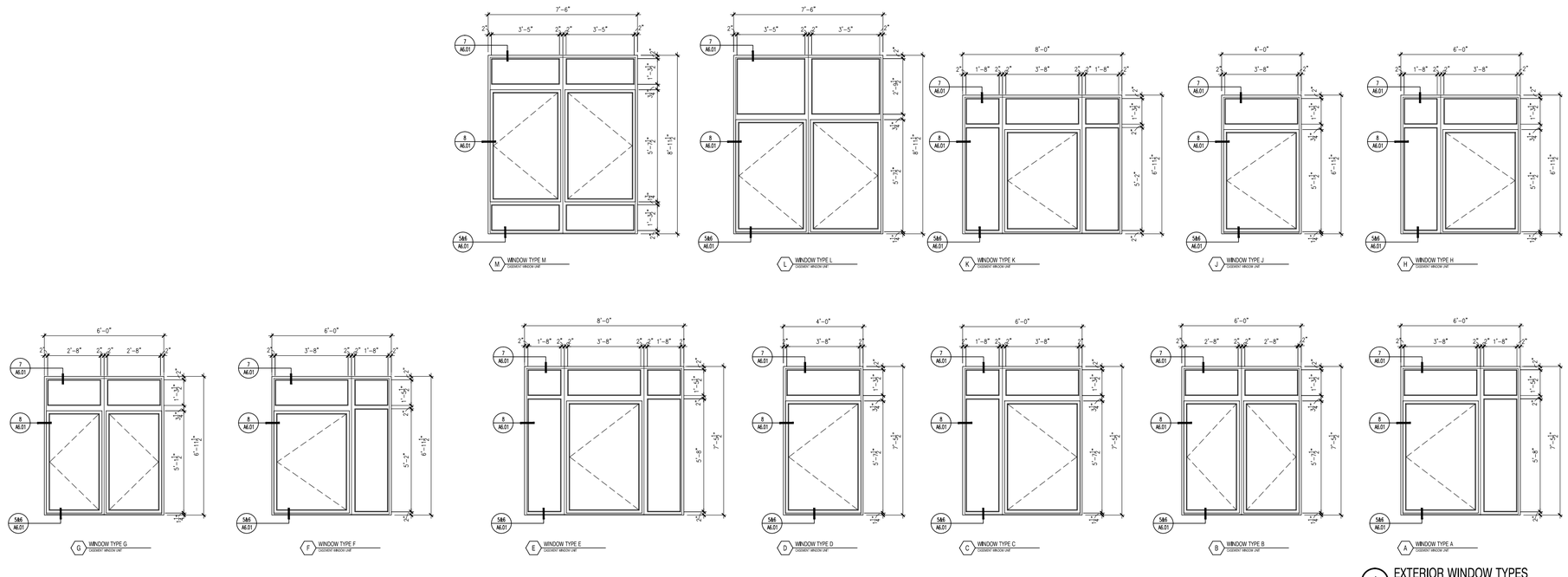

1 EXTERIOR WINDOW TYPES
3/8" = 1'-0"

A13 architects
526 Boston Post Rd Wayland, MA
508.358.0790 www.a13architects.com

BEVERLY MIDDLE SCHOOL

CABOT STREET
BEVERLY, MA 01915

Copyright © 2016 A13 Architects, LLC

KEYNOTE LEGEND: (REFERENCE SHEETS A0.01 & A0.02 FOR MASTER KEYNOTE LIST AND KEYNOTES NOT LISTED)

04 40 00.01	STONE VENEER
04 40 00.05	STONE SILL
04 40 00.10	GALVANIZED METAL LATH
04 40 00.11	SCRATCH COAT
04 40 00.20	STONE SILL SUPPORT CLIP/BRACKET
05 40 00.10	STEEL STUDS – 10 INCH – 16 INCHES O.C. MAX
05 40 00.41	STEEL STUD & TRACK – BOXED HEADER
06 10 00.21	WOOD BLOCKING – 2X FIRE RETARDANT TREATED – SIZE AS NOTED OR DRAWN
06 20 00.03	HARDWOOD TRIM – 3/4 INCH – PENCILED EDGE 1/8 INCH RADIUS – TRANSPARENT FINISH
07 21 00.11	INSULATING NAIL BASE – 2 INCH – EXTERIOR WALL
07 21 31.02	FOAM INSULATION – SPRAYED-IN-PLACE – 1-1/2 INCH DEPTH BETWEEN STUDS
07 27 13.01	AIR/VAPOR BARRIER MEMBRANE – SELF-ADHERING
07 27 13.02	AIR/VAPOR BARRIER MEMBRANE – SELF-ADHERING – 2 LAYERS
07 27 13.05	AIR/VAPOR BARRIER TRANSITION MEMBRANE – SELF-ADHERING
07 27 13.20	ALUMINUM FLASHING
07 46 46.01	MINERAL FIBER CEMENT SIDING PANEL
07 46 46.02	MINERAL FIBER CEMENT SMOOTH PANEL
07 46 46.11	STARTER TRACK
07 46 46.12	CLIP
07 46 46.32	SINGLE FLANGE SEALANT BACKER
07 92 00.01	JOINT SEALANT – TYPE AS REQUIRED
07 92 00.02	BACKER ROD AND SEALANT – TYPE AS REQUIRED
08 51 13.01	ALUMINUM WINDOW – SEE SCHEDULE
08 51 13.31	SUB-FRAME / RECEPTOR
09 29 00.01	5/8 INCH GYPSUM BOARD – LEVEL 4 FINISH
09 29 00.44	J BEAD EDGE TRIM
12 24 00.01	ROLLER SHADE

GENERAL NOTES:

1. ALL WINDOW MULLIONS TO BE ZERO MULL UNLESS NOTED OTHERWISE.

LEGEND

EXTERIOR DETAIL

INTERIOR DETAIL

SPANDREL GLAZING, (SEE ELEVATIONS FOR LOCATIONS)

90% CONSTRUCTION DOCUMENTS

NOT FOR CONSTRUCTION

NORTH ARROW

KEYPLAN

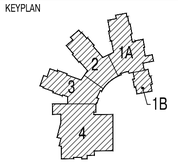

DRAWING NAME:

EXTERIOR WINDOW TYPES

DRAWN BY:	RPM
REVIEWED BY:	CLO
SCALE:	As Noted
JOB NO.:	1403.00
DATE:	July 25, 2016
DRAWING NUMBER:	A6.01

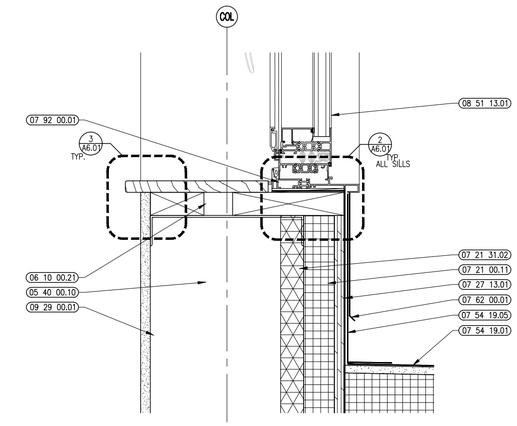

2 SILL DETAIL
3" = 1'-0"

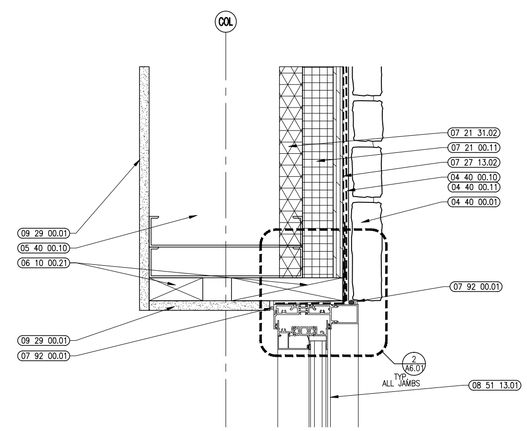

1 JAMB DETAIL
3" = 1'-0"

526 Boston Post Rd Wayland, MA
508.358.0790 www.ai3architects.com

BEVERLY MIDDLE SCHOOL

CABOT STREET
BEVERLY, MA 01915

Copyright © 2016 Ai3 Architects, LLC

KEYNOTE LEGEND: (REFERENCE SHEETS A0.01 & A0.02 FOR MASTER KEYNOTE LIST AND KEYNOTES NOT LISTED)

04 40 00.01	STONE VENEER
04 40 00.10	GALVANIZED METAL LATH
04 40 00.11	SCRATCH COAT
05 40 00.10	STEEL STUDS – 10 INCH – 16 INCHES O.C. MAX
06 10 00.21	WOOD BLOCKING – 2X FIRE RETARDANT TREATED – SIZE AS NOTED OR DRAWN
07 21 00.11	INSULATING NAIL BASE – 2 INCH – EXTERIOR WALL
07 21 31.02	FOAM INSULATION – SPRAYED–IN–PLACE – 1–1/2 INCH DEPTH BETWEEN STUDS
07 27 13.01	AIR/VAPOR BARRIER MEMBRANE – SELF–ADHERING
07 27 13.02	AIR/VAPOR BARRIER MEMBRANE – SELF–ADHERING – 2 LAYERS
07 54 19.01	PVC SINGLE PLY MEMBRANE ROOFING
07 54 19.05	FLASHING MEMBRANE
07 62 00.01	SHEET METAL FLASHING
07 92 00.01	JOINT SEALANT – TYPE AS REQUIRED
08 51 13.01	ALUMINUM WINDOW – SEE SCHEDULE
09 29 00.01	5/8 INCH GYPSUM BOARD – LEVEL 4 FINISH

90% CONSTRUCTION DOCUMENTS

NOT FOR CONSTRUCTION

NORTH ARROW

KEYPLAN

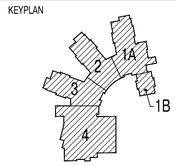

DRAWING NAME:

EXTERIOR WINDOW DETAILS

DRAWN BY:	RPM
REVIEWED BY:	CLO
SCALE:	As Noted
JOB NO.:	1403.00
DATE:	July 25, 2016

DRAWING NUMBER: A6.02

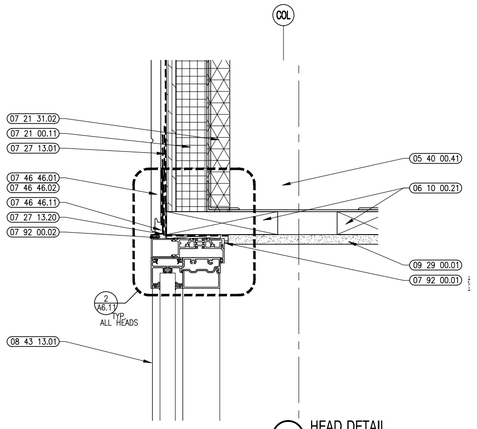

5 HEAD DETAIL
3" = 1'-0"

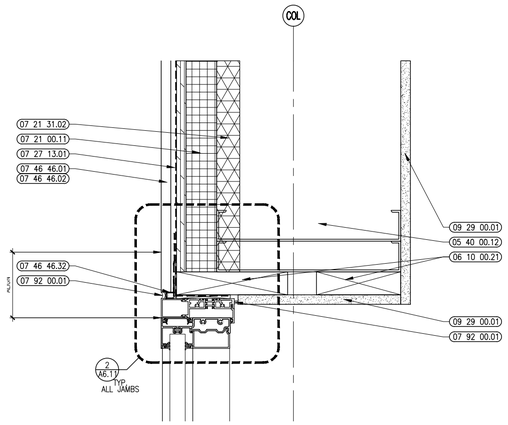

6 JAMB DETAIL
3" = 1'-0"

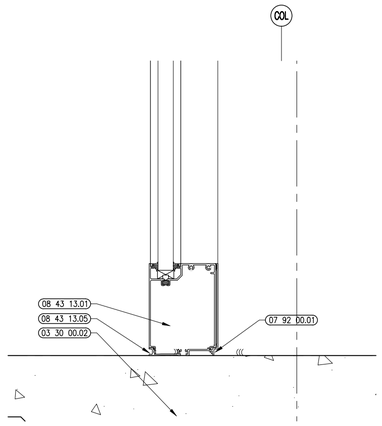

4 SILL DETAIL
3" = 1'-0"

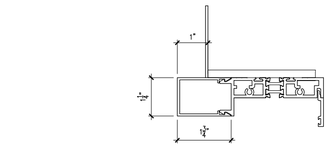

3 STOREFRONT RECEPTOR DETAIL (08 43 13.31)
6" = 1'-0"

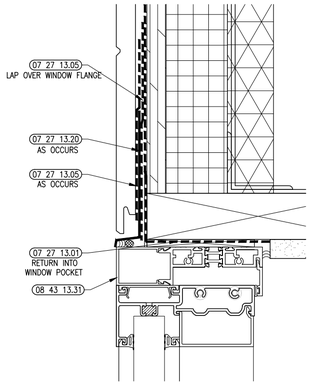

2 TYPICAL AVB TIE-IN

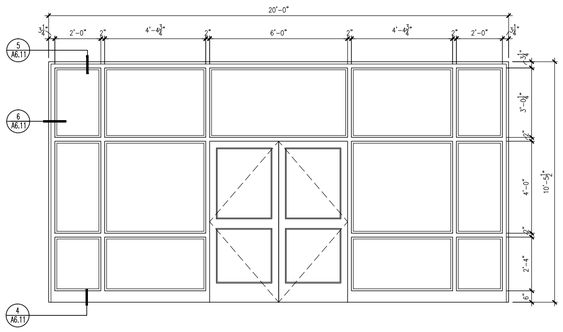

SF7 STOREFRONT TYPE 7

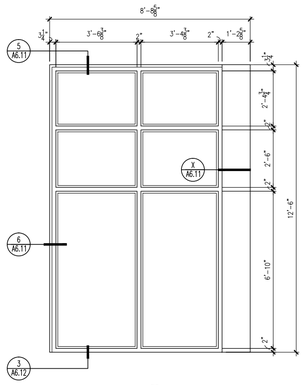

SF6A STOREFRONT TYPE 6A

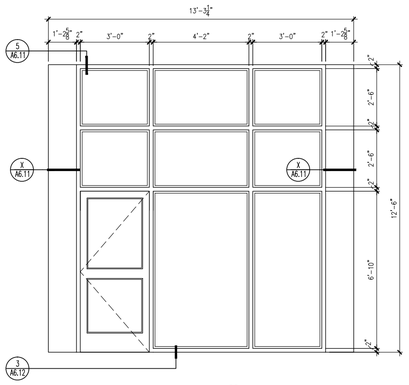

SF6B STOREFRONT TYPE 6B

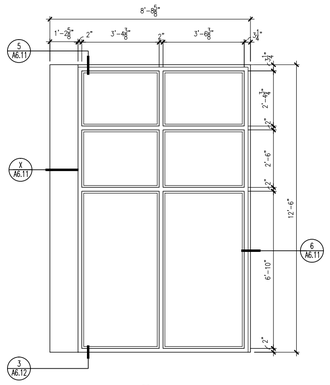

SF6C STOREFRONT TYPE 6C

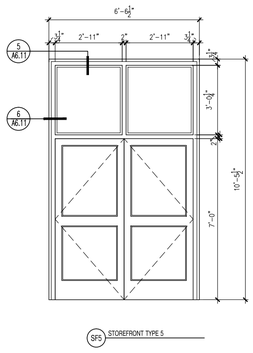

SF5 STOREFRONT TYPE 5

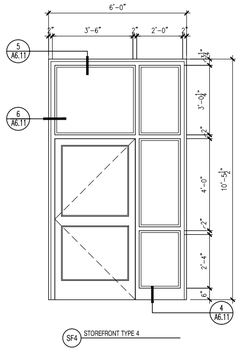

SF4 STOREFRONT TYPE 4

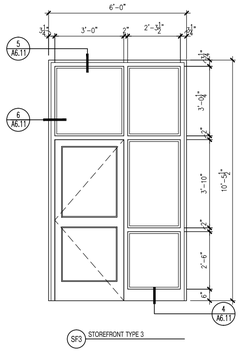

SF3 STOREFRONT TYPE 3

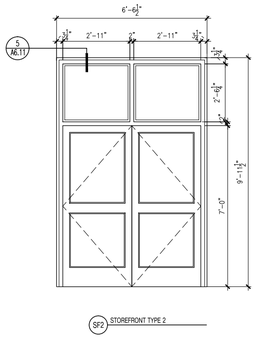

SF2 STOREFRONT TYPE 2

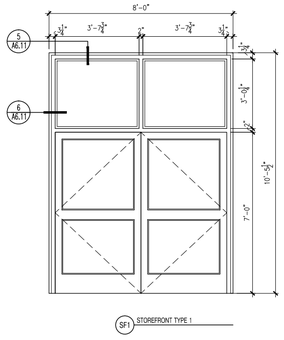

SF1 STOREFRONT TYPE 1

1 STOREFRONT TYPES
3/8" = 1'-0"

A13 architects
526 Boston Post Rd Wayland, MA
508.358.0790 www.a13architects.com

BEVERLY MIDDLE SCHOOL

CABOT STREET
BEVERLY, MA 01915

Copyright © 2016 A13 Architects, LLC

KEYNOTE LEGEND: (REFERENCE SHEETS A0.01 & A0.02 FOR MASTER KEYNOTE LIST AND KEYNOTES NOT LISTED)

03 30 00.02	CONCRETE SLAB ON GRADE – SEE STRUCTURAL
05 40 00.12	STEEL STUDS – 12 INCH – 16 INCHES O.C. MAX
05 40 00.41	STEEL STUD & TRACK – BOXED HEADER
06 10 00.21	WOOD BLOCKING – 2X FIRE RETARDANT TREATED – SIZE AS NOTED OR DRAWN
07 21 00.11	INSULATING NAIL BASE – 2 INCH – EXTERIOR WALL
07 21 31.02	FOAM INSULATION – SPRAYED-IN-PLACE – 1-1/2 INCH DEPTH BETWEEN STUDS
07 27 13.01	AIR/VAPOR BARRIER MEMBRANE – SELF-ADHERING
07 27 13.05	AIR/VAPOR BARRIER TRANSITION MEMBRANE – SELF-ADHERING
07 27 13.20	ALUMINUM FLASHING
07 46 46.01	MINERAL FIBER CEMENT SIDING PANEL
07 46 46.02	MINERAL FIBER CEMENT SMOOTH PANEL
07 46 46.11	STARTER TRACK
07 46 46.32	SINGLE FLANGE SEALANT BACKER
07 92 00.01	JOINT SEALANT – TYPE AS REQUIRED
07 92 00.02	BACKER ROD AND SEALANT – TYPE AS REQUIRED
08 43 13.01	ALUMINUM STOREFRONT FRAME
08 43 13.05	PERIMETER SEALANT
08 43 13.31	SUB-FRAME / RECEPTOR
09 29 00.01	5/8 INCH GYPSUM BOARD – LEVEL 4 FINISH

LEGEND

EXTERIOR DETAIL

INTERIOR DETAIL

SPANDREL GLAZING, (SEE ELEVATIONS FOR LOCATIONS)

90% CONSTRUCTION DOCUMENTS

NOT FOR CONSTRUCTION

NORTH ARROW

KEYPLAN

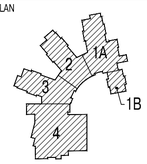

DRAWING NAME:

STOREFRONT TYPES

DRAWN BY:	RPM
REVIEWED BY:	CLO
SCALE:	As Noted
JOB NO.:	1403.00
DATE:	July 25, 2016
DRAWING NUMBER:	A6.11

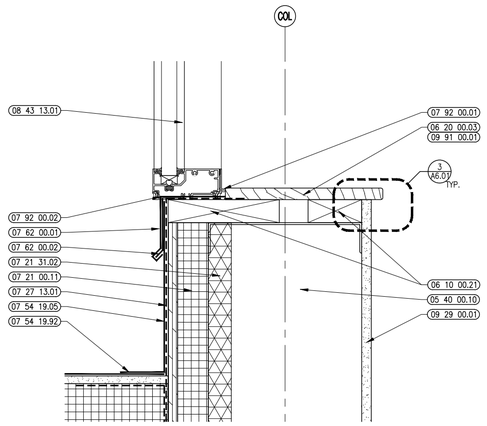

3 SILL DETAIL
3" = 1'-0"

2 NOT USED
3" = 1'-0"

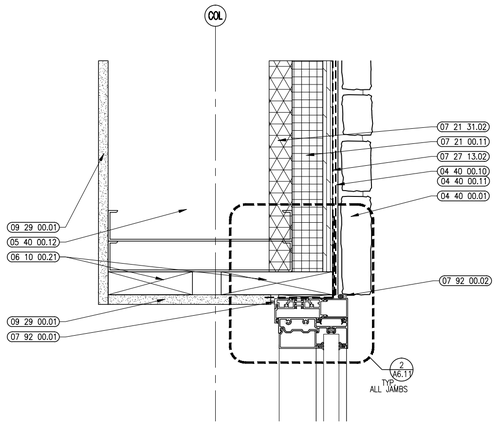

4 JAMB DETAIL
3" = 1'-0"

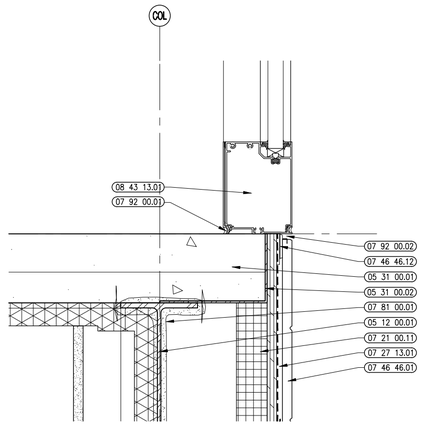

1 SILL DETAIL
3" = 1'-0"

A13 architects
526 Boston Post Rd Wayland, MA
508.358.0790 www.a13architects.com

BEVERLY MIDDLE SCHOOL

CABOT STREET
BEVERLY, MA 01915

Copyright © 2016 A13 Architects, LLC

KEYNOTE LEGEND: (REFERENCE SHEETS A0.01 & A0.02 FOR MASTER KEYNOTE LIST AND KEYNOTES NOT LISTED)

04 40 00.01	STONE VENEER
04 40 00.10	GALVANIZED METAL LATH
04 40 00.11	SCRATCH COAT
05 12 00.01	STEEL BEAM – SEE STRUCTURAL
05 31 00.01	COMPOSITE STEEL DECK – SEE STRUCTURAL
05 31 00.02	POUR STOP – FLOOR SLAB – SEE STRUCTURAL
05 40 00.10	STEEL STUDS – 10 INCH – 16 INCHES O.C. MAX
05 40 00.12	STEEL STUDS – 12 INCH – 16 INCHES O.C. MAX
06 10 00.21	WOOD BLOCKING – 2X FIRE RETARDANT TREATED – SIZE AS NOTED OR DRAWN
06 20 00.03	HARDWOOD TRIM – 3/4 INCH – PENCILED EDGE 1/8 INCH RADIUS – TRANSPARENT FINISH
07 21 00.11	INSULATING NAIL BASE – 2 INCH – EXTERIOR WALL
07 21 31.02	FOAM INSULATION – SPRAYED-IN-PLACE – 1-1/2 INCH DEPTH BETWEEN STUDS
07 27 13.01	AIR/VAPOR BARRIER MEMBRANE – SELF-ADHERING
07 27 13.02	AIR/VAPOR BARRIER MEMBRANE – SELF-ADHERING – 2 LAYERS
07 27 33.02	FOAM INSULATION – SPRAYED-IN-PLACE – 1-1/2 INCH DEPTH BETWEEN STUDS
07 46 46.01	MINERAL FIBER CEMENT SIDING PANEL
07 46 46.12	CLIP
07 54 19.05	FLASHING MEMBRANE
07 54 19.92	HOT-AIR WELD
07 62 00.01	SHEET METAL FLASHING
07 62 00.02	SHEET METAL COUNTER FLASHING
07 81 00.01	CEMENTITIOUS FIREPROOFING
07 92 00.01	JOINT SEALANT – TYPE AS REQUIRED
07 92 00.02	BACKER ROD AND SEALANT – TYPE AS REQUIRED
08 43 13.01	ALUMINUM CURTAIN WALL FRAME
08 44 13.01	ALUMINUM CURTAIN WALL FRAME
09 29 00.01	5/8 INCH GYPSUM BOARD – LEVEL 4 FINISH
09 91 00.01	PAINT – SEE SCHEDULE

90% CONSTRUCTION DOCUMENTS

NOT FOR CONSTRUCTION

NORTH ARROW

KEYPLAN

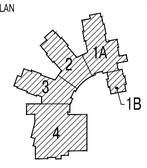

DRAWING NAME:

STOREFRONT DETAILS

DRAWN BY:	RPM
REVIEWED BY:	CLO
SCALE:	As Noted
JOB NO.:	1403.00
DATE:	July 25, 2016
DRAWING NUMBER:	A6.12

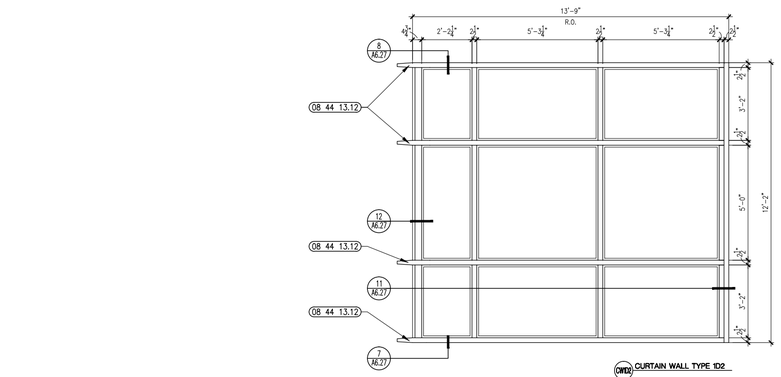

CW(D2) CURTAIN WALL TYPE 1D2

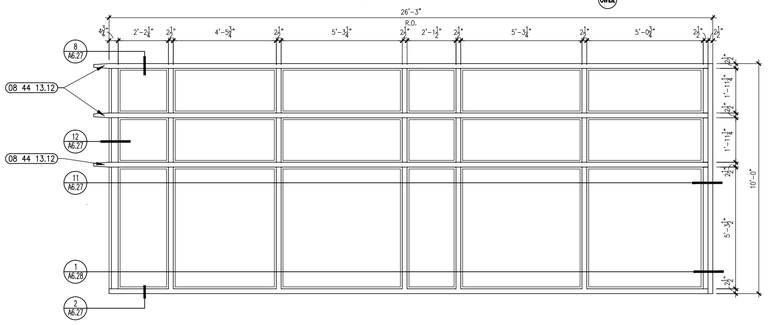

CW(D1) CURTAIN WALL TYPE 1D1

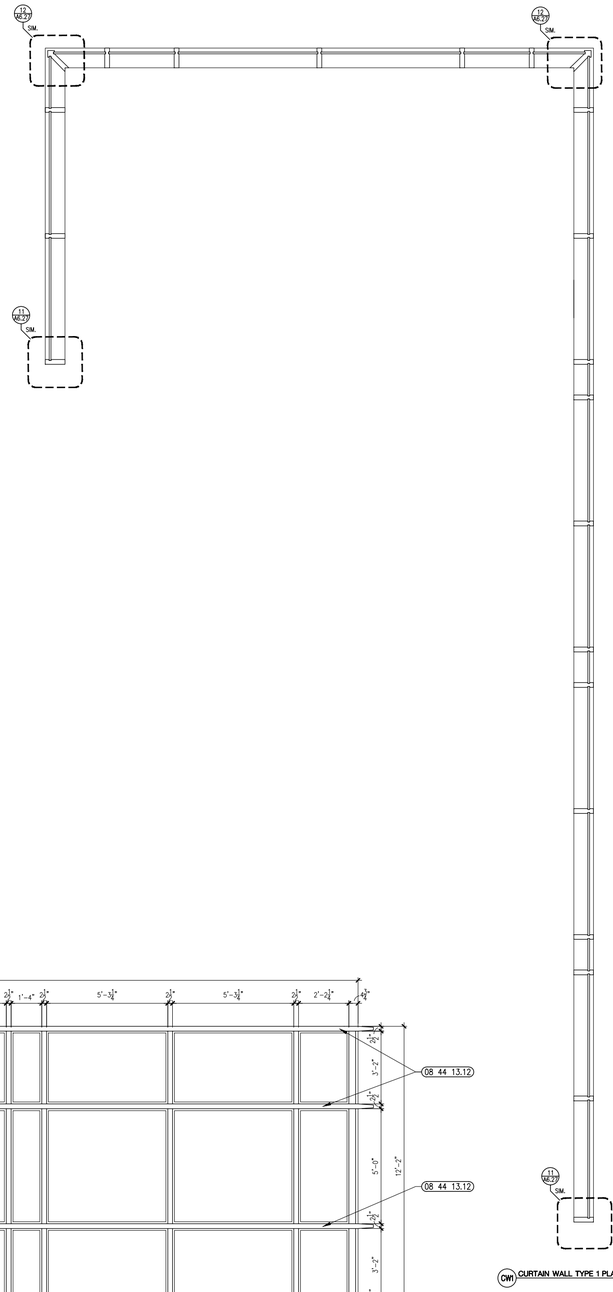

CW(1) CURTAIN WALL TYPE 1 PLAN 2

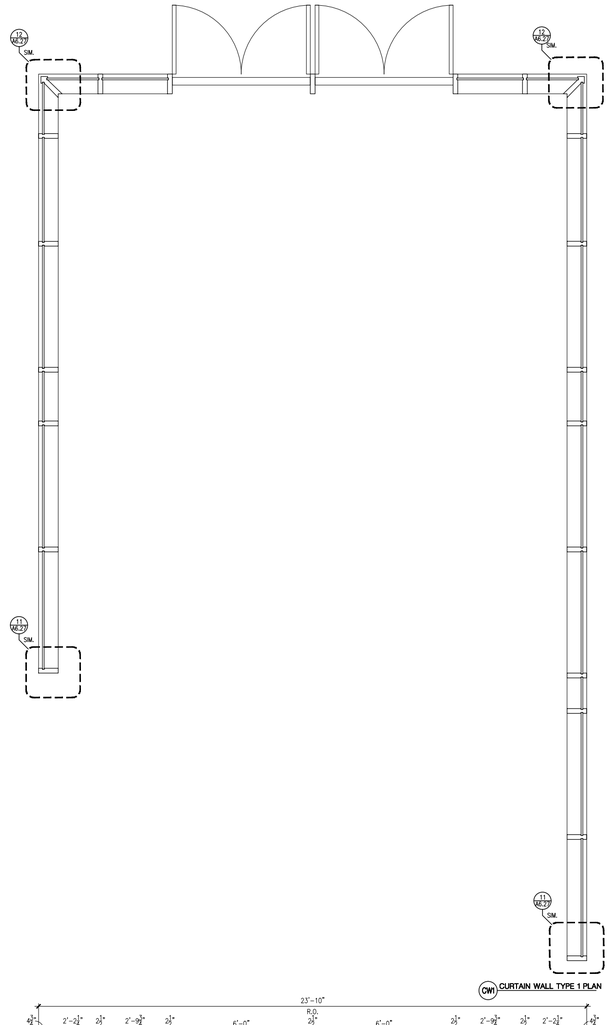

CW(1) CURTAIN WALL TYPE 1 PLAN

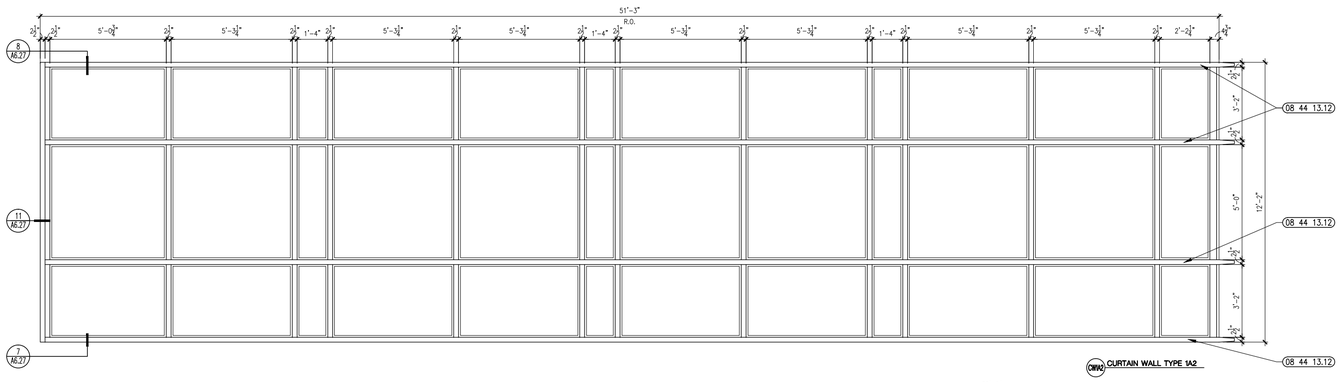

CW(A2) CURTAIN WALL TYPE 1A2

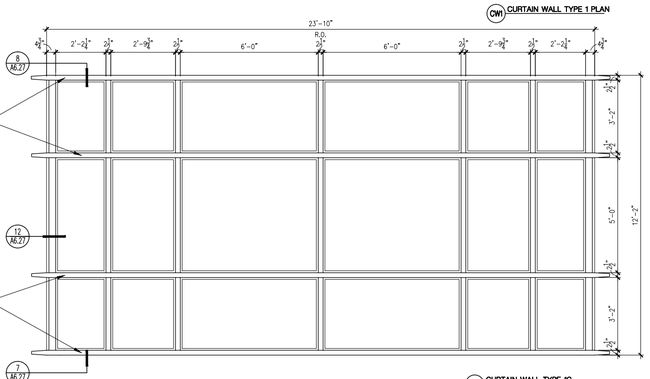

CW(C) CURTAIN WALL TYPE 1C

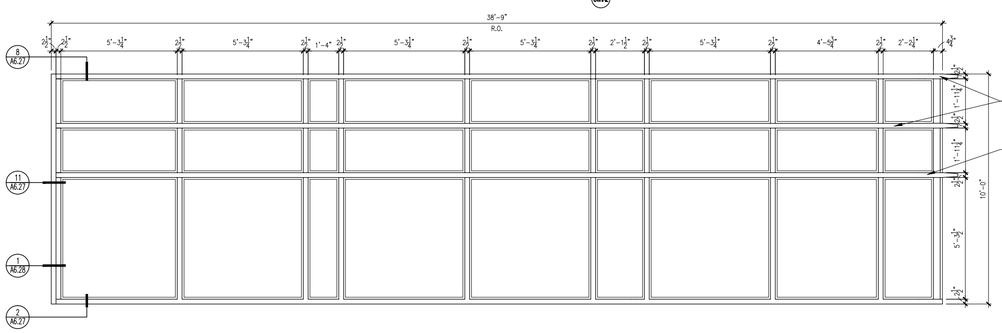

CW(A1) CURTAIN WALL TYPE 1A1

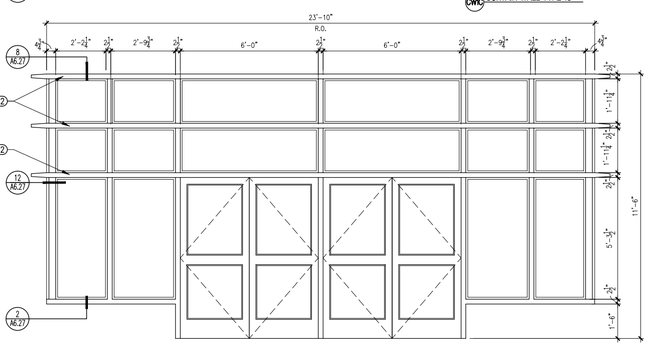

CW(B) CURTAIN WALL TYPE 1B

1 CURTAIN WALL TYPES
3/8" = 1'-0"

Ai3 architects
526 Boston Post Rd Wayland, MA
508.358.0790 www.ai3architects.com

BEVERLY MIDDLE SCHOOL

CABOT STREET
BEVERLY, MA 01915

Copyright © 2016 Ai3 Architects, LLC

KEYNOTE LEGEND: (REFERENCE SHEETS A0.01 & A0.02 FOR MASTER KEYNOTE LIST AND KEYNOTES NOT LISTED)

08 44 13.12 SNAP COVER – TYPE 2

GENERAL NOTES:

1. ALL SNAP COVERS TO BE TYPE 1, UNLESS NOTED OTHERWISE.
2. COORDINATE WITH SUNSHADES, REFER TO A6.41, A6.42, AND EXTERIOR ELEVATIONS.

LEGEND

EXTERIOR DETAIL

INTERIOR DETAIL

SPANDREL GLAZING, (SEE ELEVATIONS FOR LOCATIONS)

90% CONSTRUCTION DOCUMENTS

NOT FOR CONSTRUCTION

NORTH ARROW

KEYPLAN

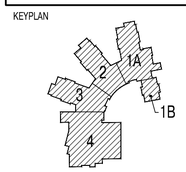

DRAWING NAME:

CURTAIN WALL TYPES

DRAWN BY:	RPM
REVIEWED BY:	CLO
SCALE:	As Noted
JOB NO.:	1403.00
DATE:	July 25, 2016
DRAWING NUMBER:	A6.21

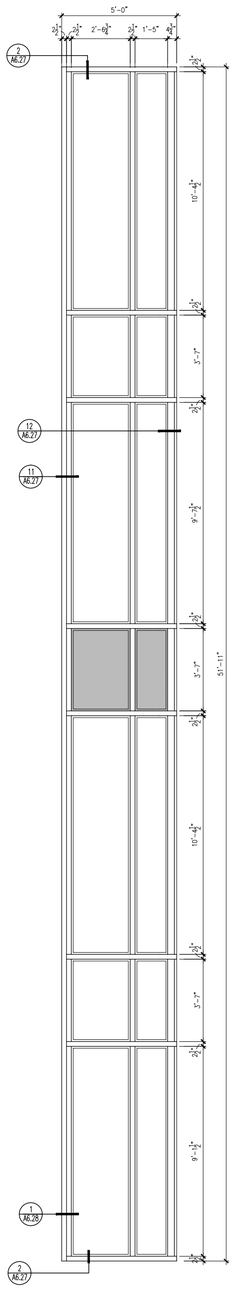

CW5A CURTAIN WALL TYPE 5A

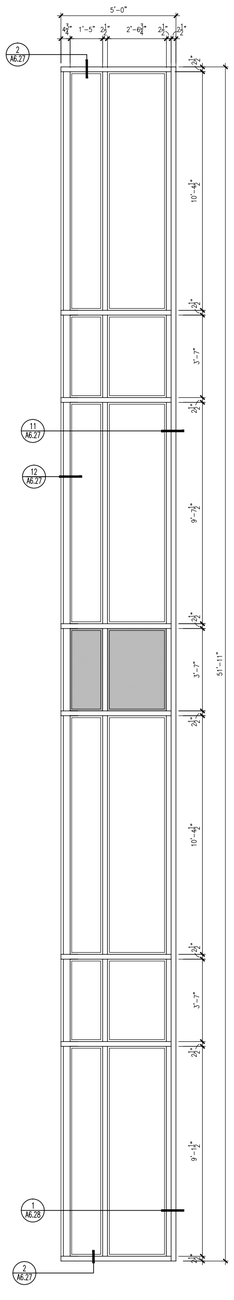

CW5C CURTAIN WALL TYPE 5C

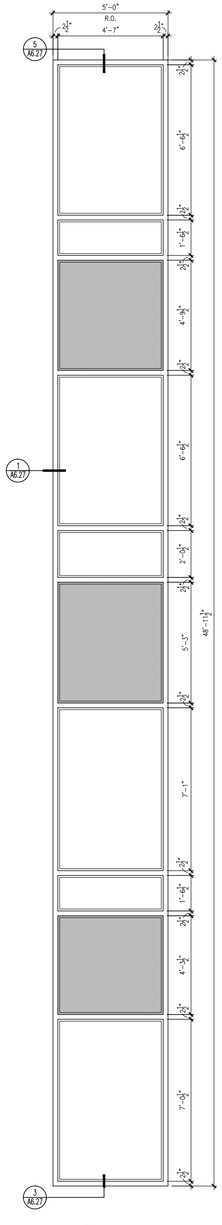

CW4 CURTAIN WALL TYPE 4

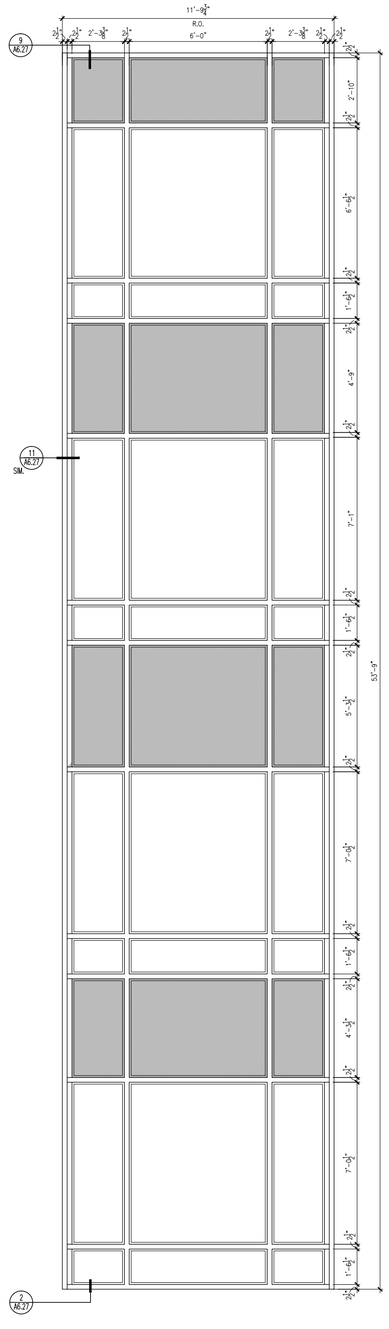

CW3 CURTAIN WALL TYPE 3

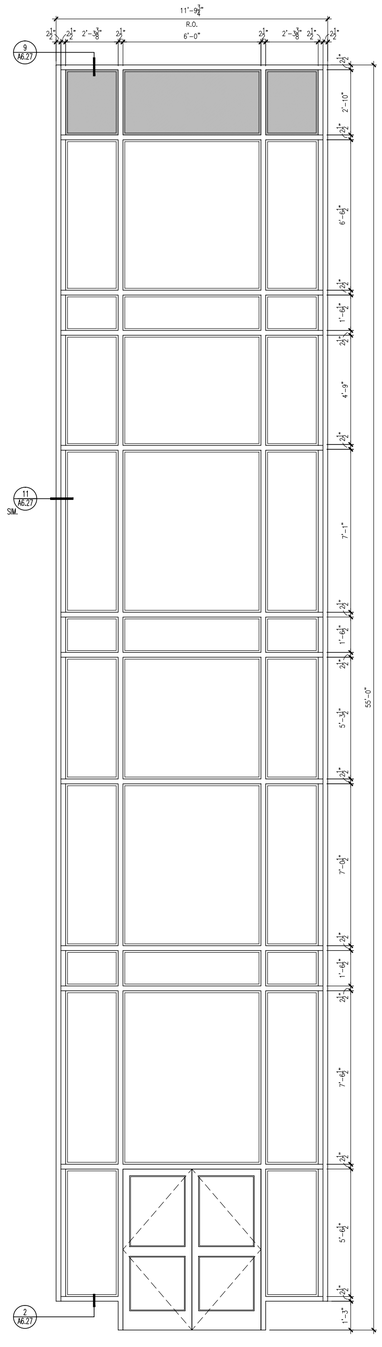

CW2 CURTAIN WALL TYPE 2

1 CURTAIN WALL TYPES
3/8" = 1'-0"

Ai3 architects
526 Boston Post Rd Wayland, MA
508.358.0790 www.ai3architects.com

BEVERLY MIDDLE SCHOOL

CABOT STREET
BEVERLY, MA 01915

Copyright © 2016 Ai3 Architects, LLC

KEYNOTE LEGEND: (REFERENCE SHEETS A0.01 & A0.02 FOR MASTER KEYNOTE LIST AND KEYNOTES NOT LISTED)

GENERAL NOTES:

1. ALL SNAP COVERS TO BE TYPE 1, UNLESS NOTED OTHERWISE.
2. COORDINATE WITH SUNSHADES, REFER TO A6.41, A6.42, AND EXTERIOR ELEVATIONS.

LEGEND

EXTERIOR DETAIL

INTERIOR DETAIL

SPANDREL GLAZING, (SEE ELEVATIONS FOR LOCATIONS)

90% CONSTRUCTION DOCUMENTS

NOT FOR CONSTRUCTION

NORTH ARROW

KEYPLAN

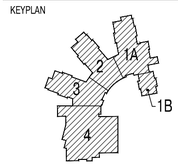

DRAWING NAME:

CURTAIN WALL TYPES

DRAWN BY:	RPM
REVIEWED BY:	CLO
SCALE:	As Noted
JOB NO.:	1403.00
DATE:	July 25, 2016
DRAWING NUMBER:	A6.22

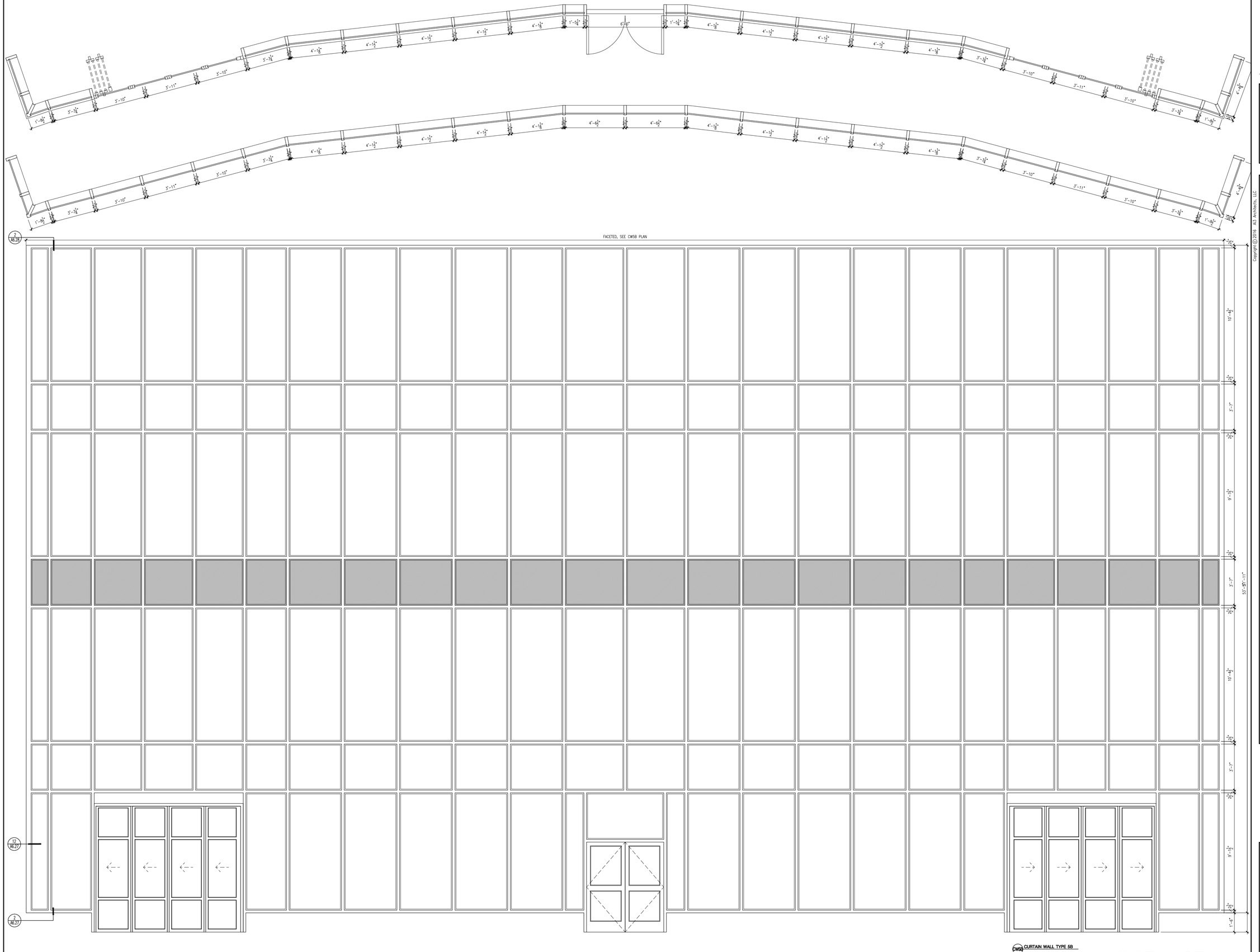

1 CURTAIN WALL TYPES
3/8" = 1'-0"

526 Boston Post Rd Wayland, MA
508.358.0790 www.ai3architects.com

BEVERLY MIDDLE SCHOOL

CABOT STREET
BEVERLY, MA 01915

Copyright © 2016 Ai3 Architects, LLC

KEYNOTE LEGEND: (REFERENCE SHEETS A0.01 & A0.02 FOR MASTER KEYNOTE LIST AND KEYNOTES NOT LISTED)

GENERAL NOTES:

1. ALL SNAP COVERS TO BE TYPE 1, UNLESS NOTED OTHERWISE.
2. COORDINATE WITH SUNSHADES, REFER TO A6.41, A6.42, AND EXTERIOR ELEVATIONS.

LEGEND

EXTERIOR DETAIL

INTERIOR DETAIL

90% CONSTRUCTION DOCUMENTS

NOT FOR CONSTRUCTION

NORTH ARROW

KEYPLAN

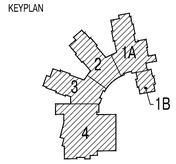

DRAWING NAME:

CURTAIN WALL TYPES

DRAWN BY:	RPM
REVIEWED BY:	CLO
SCALE:	As Noted
JOB NO.:	1403.00
DATE:	July 25, 2016
DRAWING NUMBER:	A6.23

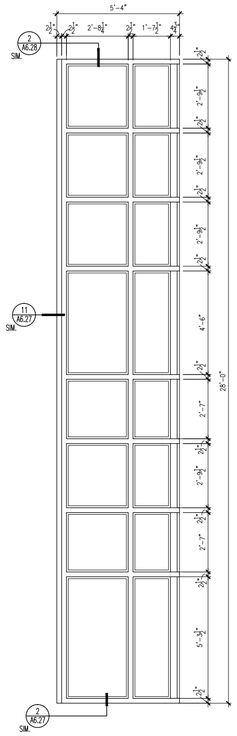

CW6E CURTAIN WALL TYPE 6E

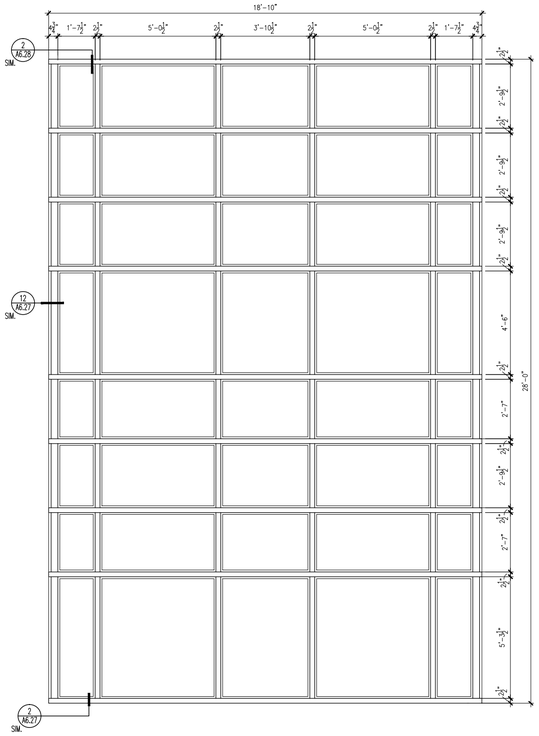

CW6D CURTAIN WALL TYPE 6D

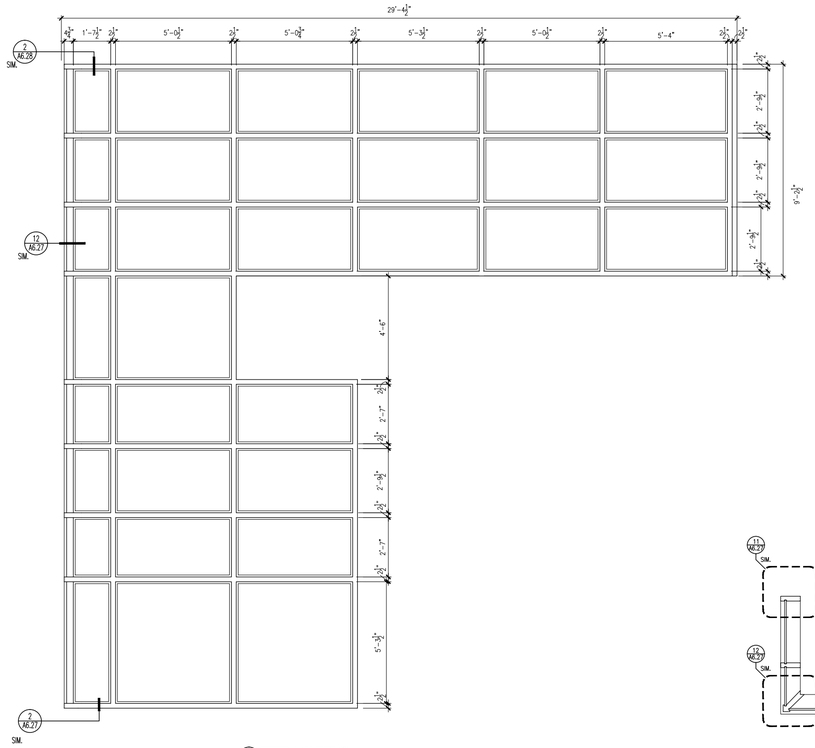

CW6C CURTAIN WALL TYPE 6C

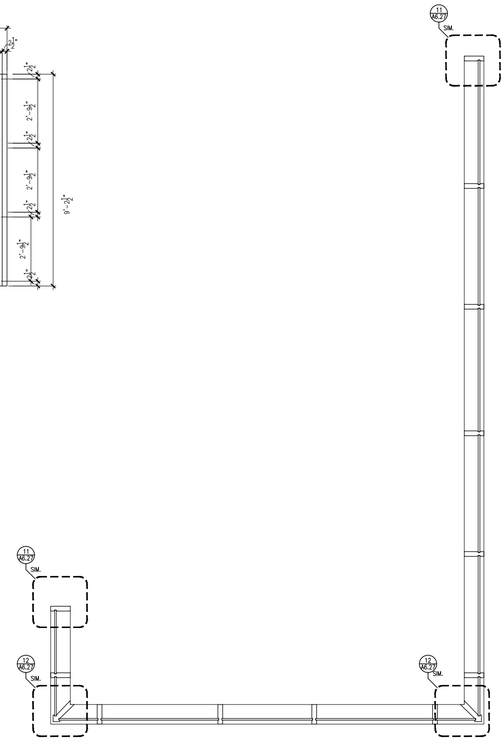

CW6 CURTAIN WALL TYPE 6 PLAN

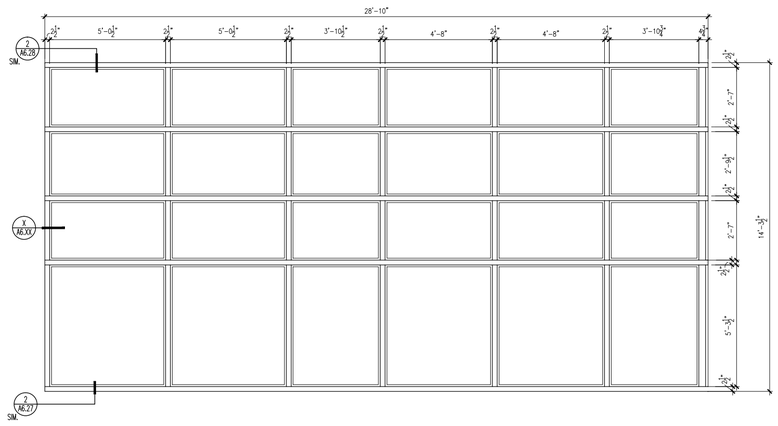

CW6B CURTAIN WALL TYPE 6B

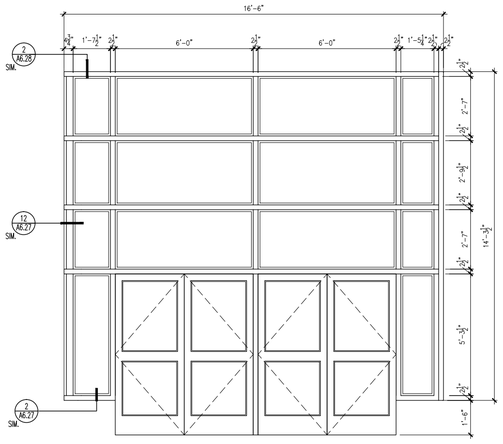

CW6A CURTAIN WALL TYPE 6A

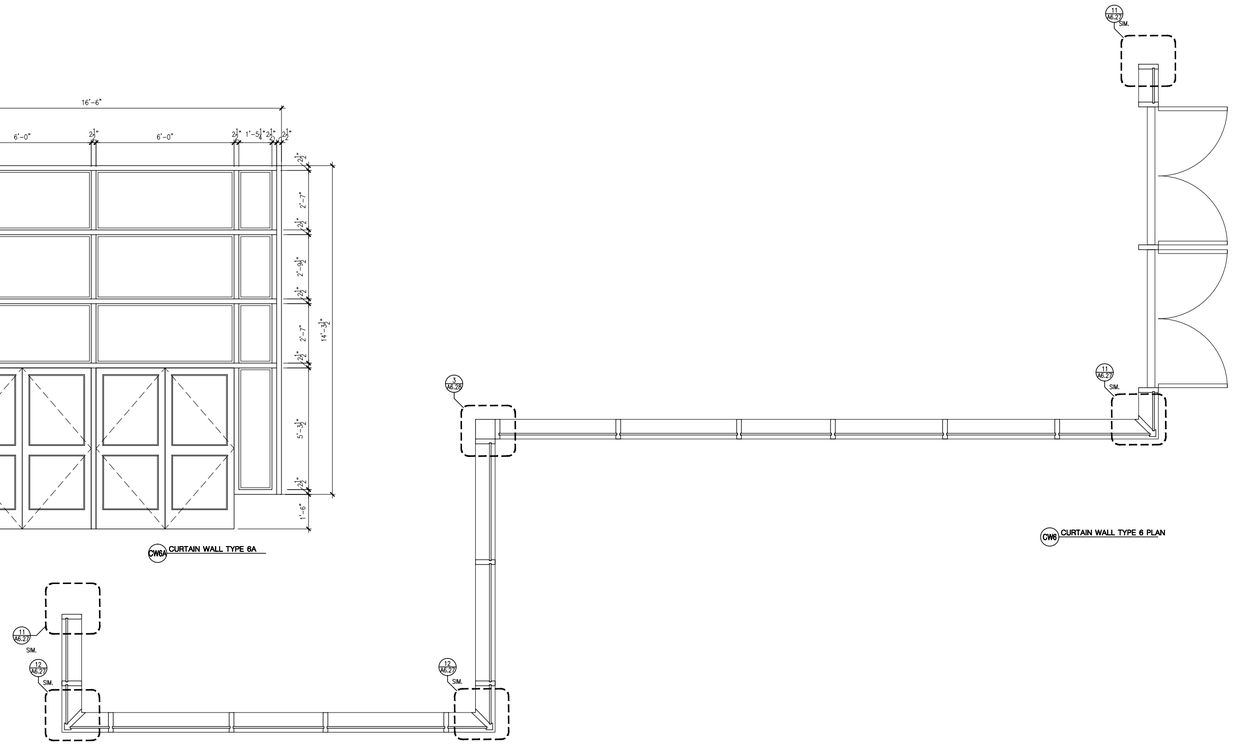

CW6 CURTAIN WALL TYPE 6 PLAN

1 CURTAIN WALL TYPES
3/8" = 1'-0"

A13 architects
526 Boston Post Rd Wayland, MA
508.358.0790 www.a13architects.com

BEVERLY MIDDLE SCHOOL

CABOT STREET
BEVERLY, MA 01915

Copyright © 2016 A13 Architects, LLC

KEYNOTE LEGEND: (REFERENCE SHEETS A0.01 & A0.02 FOR MASTER KEYNOTE LIST AND KEYNOTES NOT LISTED)

GENERAL NOTES:

1. ALL SNAP COVERS TO BE TYPE 1, UNLESS NOTED OTHERWISE.
2. COORDINATE WITH SUNSHADES, REFER TO A6.41, A6.42, AND EXTERIOR ELEVATIONS.

LEGEND

EXTERIOR DETAIL

INTERIOR DETAIL

SPANDREL GLAZING, (SEE ELEVATIONS FOR LOCATIONS)

90% CONSTRUCTION DOCUMENTS

NOT FOR CONSTRUCTION

NORTH ARROW

KEYPLAN

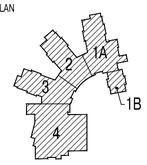

DRAWING NAME:

CURTAIN WALL TYPES

DRAWN BY:	RPM
REVIEWED BY:	CLO
SCALE:	As Noted
JOB NO.:	1403.00
DATE:	July 25, 2016
DRAWING NUMBER:	A6.24

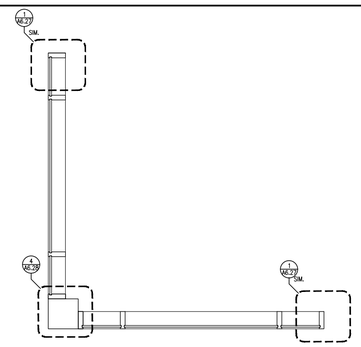

CW10 CURTAIN WALL TYPE CW10 PLAN

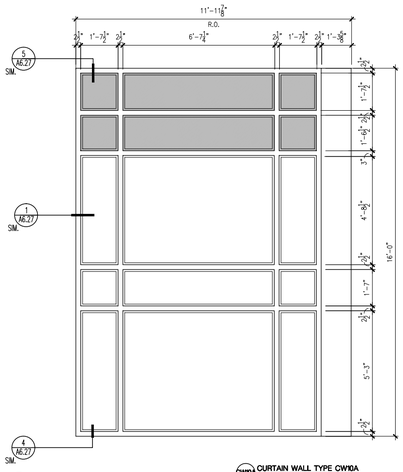

CW10A CURTAIN WALL TYPE CW10A

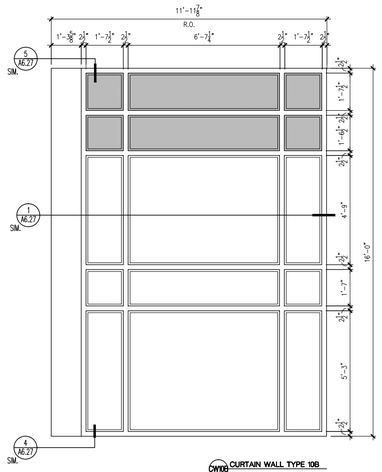

CW10B CURTAIN WALL TYPE 10B

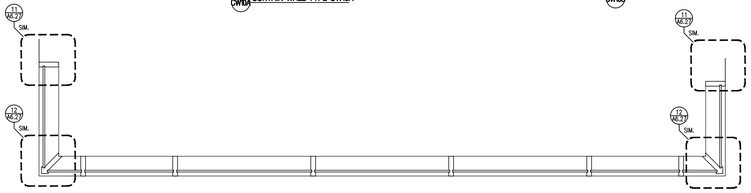

CW9 CURTAIN WALL TYPE 9 PLAN

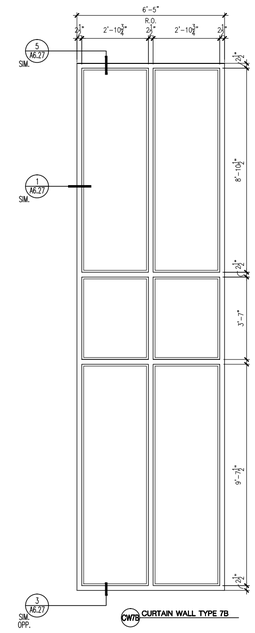

CW7B CURTAIN WALL TYPE 7B

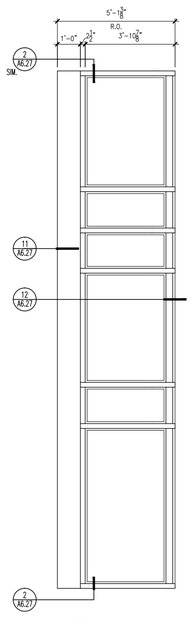

CW9A CURTAIN WALL TYPE 9A

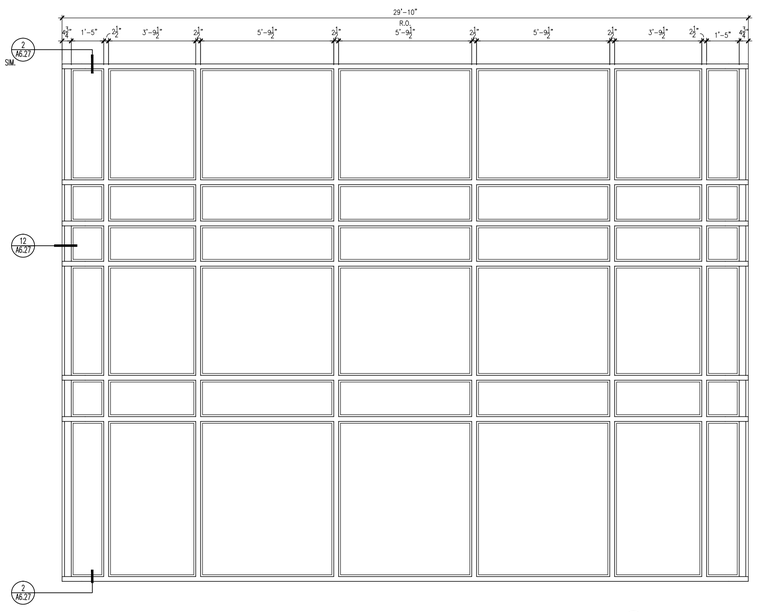

CW9B CURTAIN WALL TYPE 9B

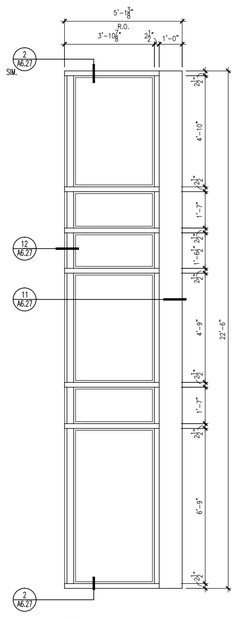

CW9C CURTAIN WALL TYPE 9C

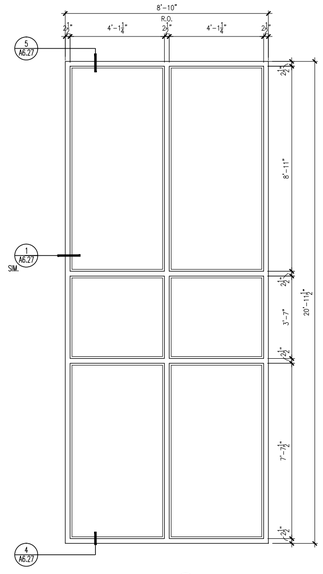

CW8 CURTAIN WALL TYPE 8

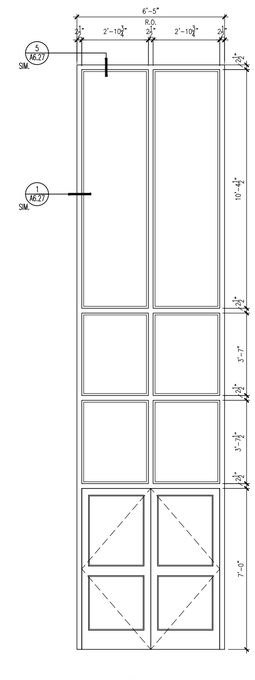

CW7A CURTAIN WALL TYPE 7A

1 CURTAIN WALL TYPES
3/8" = 1'-0"

architects

526 Boston Post Rd Wayland, MA
508.358.0790 www.ai3architects.com

BEVERLY MIDDLE SCHOOL

CABOT STREET
BEVERLY, MA 01915

Copyright © 2016 Ai3 Architects, LLC

KEYNOTE LEGEND: (REFERENCE SHEETS A0.01 & A0.02 FOR MASTER KEYNOTE LIST AND KEYNOTES NOT LISTED)

GENERAL NOTES:

1. ALL SNAP COVERS TO BE TYPE 1, UNLESS NOTED OTHERWISE.
2. COORDINATE WITH SUNSHADES, REFER TO A6.41, A6.42, AND EXTERIOR ELEVATIONS.

LEGEND

EXTERIOR DETAIL

INTERIOR DETAIL

SPANDREL GLAZING, (SEE ELEVATIONS FOR LOCATIONS)

90% CONSTRUCTION DOCUMENTS

NOT FOR CONSTRUCTION

NORTH ARROW

KEYPLAN

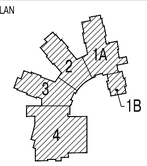

DRAWING NAME:

CURTAIN WALL TYPES

DRAWN BY:	RPM
REVIEWED BY:	CLO
SCALE:	As Noted
JOB NO.:	1403.00
DATE:	July 25, 2016
DRAWING NUMBER:	A6.25

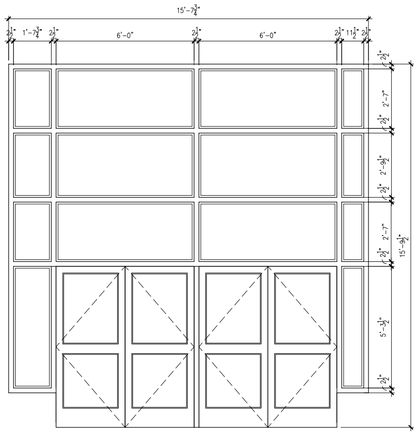

CW3 INT. CURTAIN WALL TYPE 3

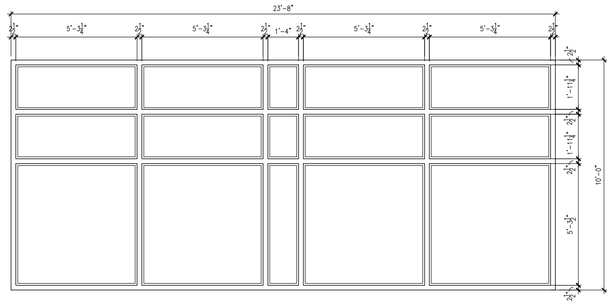

CW2 INT. CURTAIN WALL TYPE 2

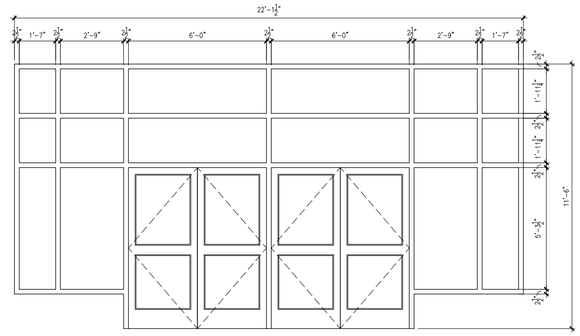

CW1 INT. CURTAIN WALL TYPE 1

2 INTERIOR CURTAIN WALL TYPES
3/8" = 1'-0"

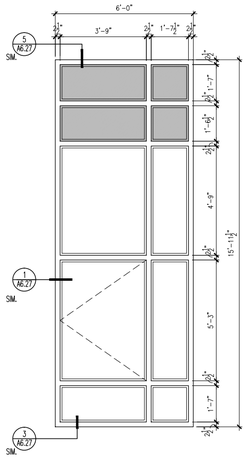

CW18 CURTAIN WALL TYPE CW18

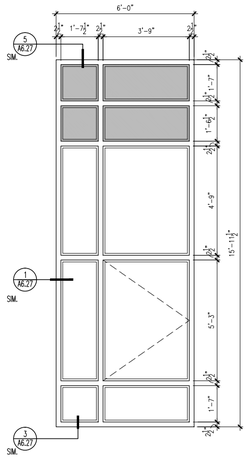

CW17 CURTAIN WALL TYPE CW17

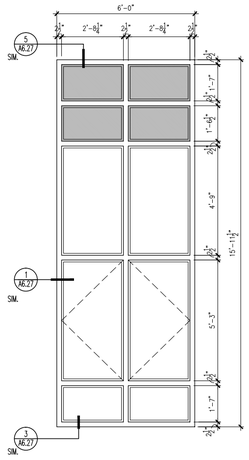

CW16 CURTAIN WALL TYPE CW16

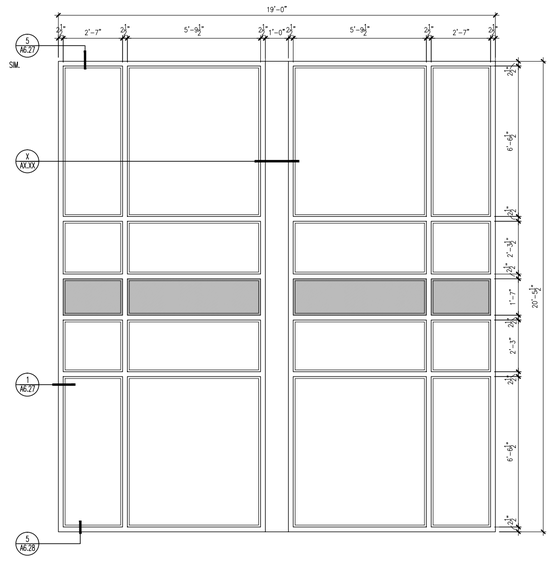

CW15 CURTAIN WALL TYPE CW15

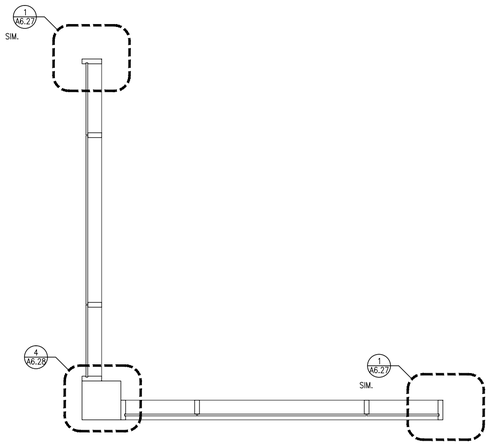

CW11 CURTAIN WALL TYPE CW11 PLAN

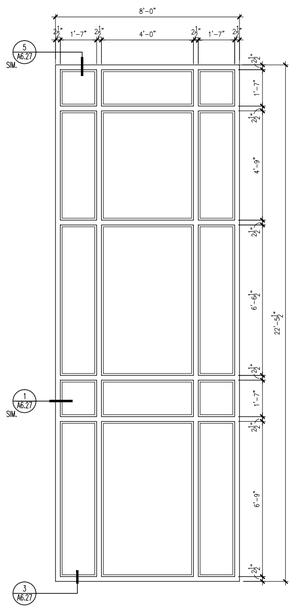

CW14 CURTAIN WALL TYPE CW14

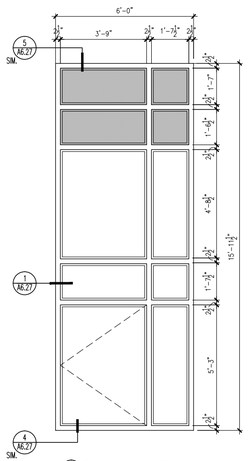

CW13 CURTAIN WALL TYPE CW13

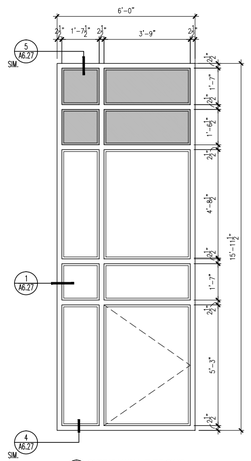

CW12 CURTAIN WALL TYPE CW12

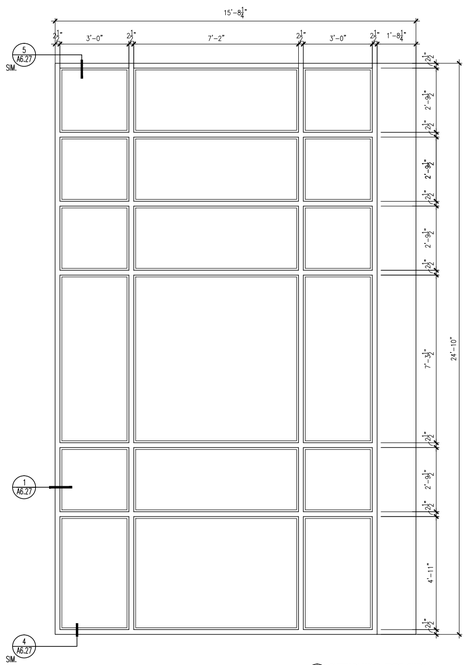

CW11A CURTAIN WALL TYPE CW11A

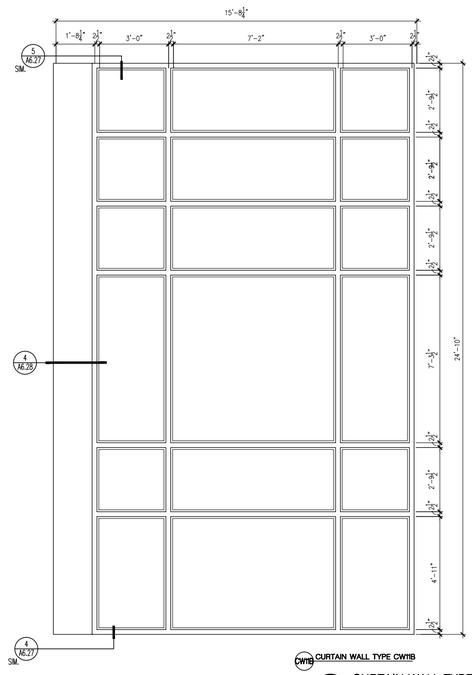

CW11B CURTAIN WALL TYPE CW11B

1 CURTAIN WALL TYPES
3/8" = 1'-0"

architects

526 Boston Post Rd Wayland, MA
508.358.0790 www.ai3architects.com

BEVERLY MIDDLE SCHOOL

CABOT STREET
BEVERLY, MA 01915

Copyright © 2016 Ai3 Architects, LLC

KEYNOTE LEGEND: (REFERENCE SHEETS A0.01 & A0.02 FOR MASTER KEYNOTE LIST AND KEYNOTES NOT LISTED)

GENERAL NOTES:

1. ALL SNAP COVERS TO BE TYPE 1, UNLESS NOTED OTHERWISE.
2. ALL INTERIOR CURTAIN WALL TO HAVE TYPE 3 SNAP COVERS.
3. COORDINATE WITH SUNSHADES, REFER TO A6.41, A6.42, AND EXTERIOR ELEVATIONS.

LEGEND

EXTERIOR DETAIL

INTERIOR DETAIL

SPANDREL GLAZING, (SEE ELEVATIONS FOR LOCATIONS)

90% CONSTRUCTION DOCUMENTS

NOT FOR CONSTRUCTION

NORTH ARROW

KEYPLAN

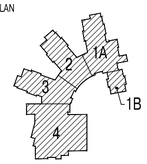

DRAWING NAME:

CURTAIN WALL TYPES

DRAWN BY:	RPM
REVIEWED BY:	CLO
SCALE: As Noted	DRAWING NUMBER:
JOB NO.: 1403.00	A6.26
DATE: July 25, 2016	

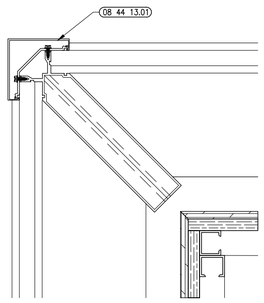

12 JAMB DETAIL
3"=1'-0"

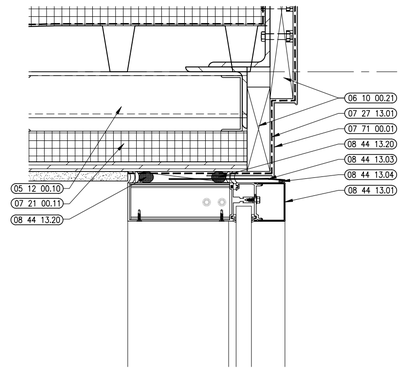

9 HEAD DETAIL
3"=1'-0"

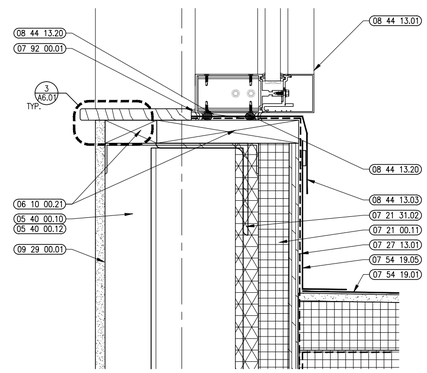

6 SILL DETAIL
3"=1'-0"

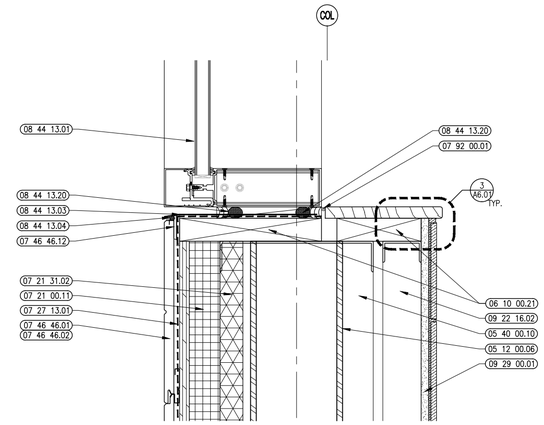

3 SILL DETAIL
3"=1'-0"

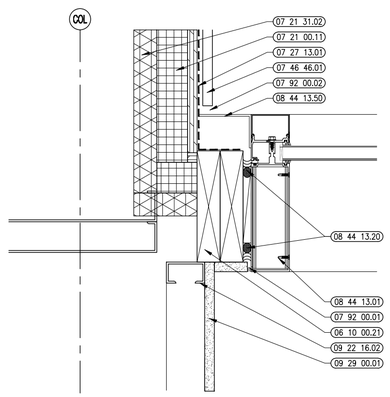

11 JAMB DETAIL
3"=1'-0"

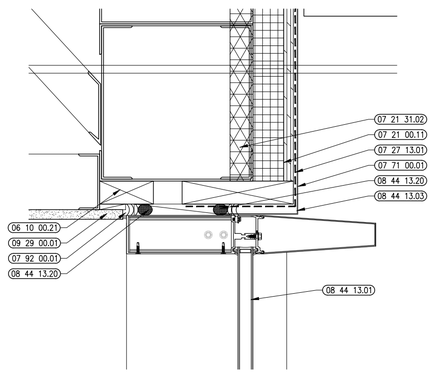

8 HEAD DETAIL
3"=1'-0"

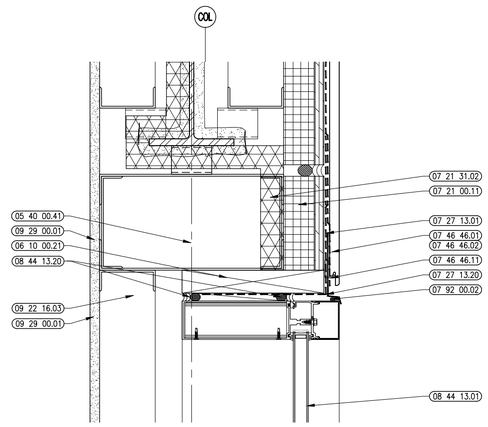

5 HEAD DETAIL
3"=1'-0"

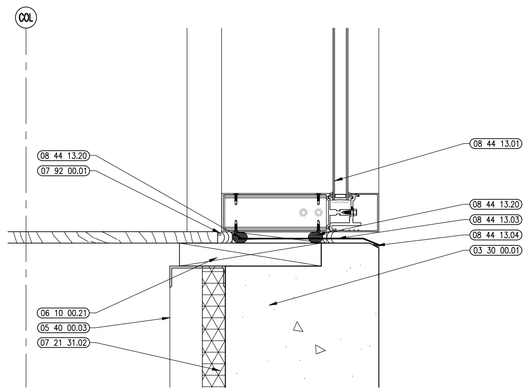

2 SILL DETAIL
3"=1'-0"

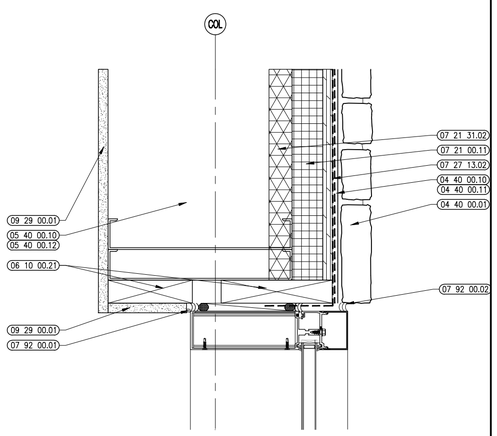

10 JAMB DETAIL
3"=1'-0"

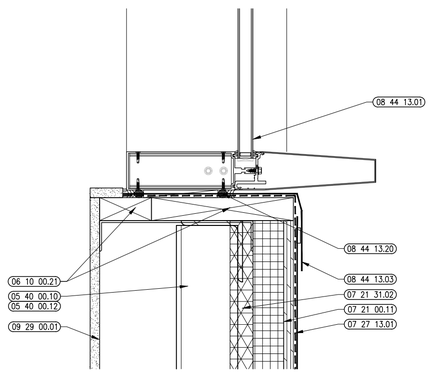

7 SILL DETAIL
3"=1'-0"

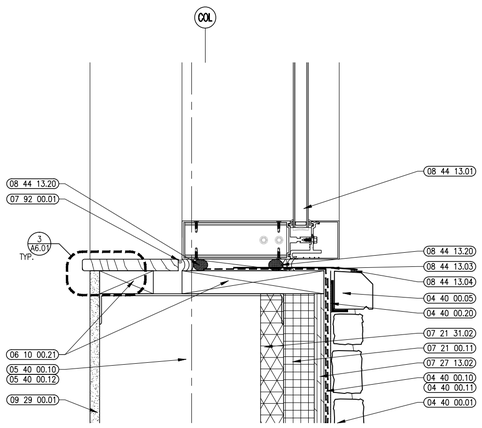

4 SILL DETAIL
3"=1'-0"

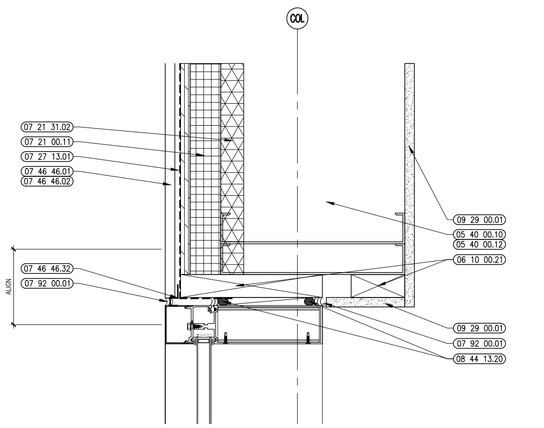

1 JAMB DETAIL
3"=1'-0"

A13 architects
526 Boston Post Rd Wayland, MA
508.358.0790 www.a13architects.com

BEVERLY MIDDLE SCHOOL

CABOT STREET
BEVERLY, MA 01915

Copyright © 2016 A13 Architects, LLC

KEYNOTE LEGEND: (REFERENCE SHEETS A0.01 & A0.02 FOR MASTER KEYNOTE LIST AND KEYNOTES NOT LISTED)

03 30 00.01	CONCRETE
04 40 00.01	STONE VENEER
04 40 00.05	STONE SILL
04 40 00.10	GALVANIZED METAL LATH
04 40 00.11	SCRATCH COAT
04 40 00.20	STONE SILL SUPPORT CLIP/BRACKET
05 12 00.06	STEEL TUBE – SEE STRUCTURAL
05 12 00.10	STEEL OUTRIGGER – SEE STRUCTURAL
05 40 00.03	STEEL STUDS – 3 5/8 INCH – 16 INCHES O.C. MAX
05 40 00.10	STEEL STUDS – 10 INCH – 16 INCHES O.C. MAX
05 40 00.12	STEEL STUDS – 12 INCH – 16 INCHES O.C. MAX
05 40 00.41	STEEL STUD & TRACK – BOXED HEADER
06 10 00.21	WOOD BLOCKING – 2X FIRE RETARDANT TREATED – SIZE AS NOTED OR DRAWN
07 21 00.11	INSULATING WALL BASE – 2 INCH – EXTERIOR WALL
07 21 31.02	FOAM INSULATION – SPRAYED-IN-PLACE – 1-1/2 INCH DEPTH BETWEEN STUDS
07 27 13.01	AIR/VAPOR BARRIER MEMBRANE – SELF-ADHERING
07 27 13.02	AIR/VAPOR BARRIER MEMBRANE – SELF-ADHERING – 2 LAYERS
07 27 13.20	ALUMINUM FLASHING
07 46 46.01	MINERAL FIBER CEMENT SIDING PANEL
07 46 46.02	MINERAL FIBER CEMENT SMOOTH PANEL
07 46 46.11	STARTER TRACK
07 46 46.12	CLIP
07 46 46.32	SINGLE FLANGE SEALANT BACKER
07 54 19.01	PVC SINGLE PLY MEMBRANE ROOFING
07 54 19.05	FLASHING MEMBRANE
07 71 00.01	FACTORY FABRICATED FASCIA TRIM/ROOF EDGE – CUSTOM COLOR
07 92 00.01	JOINT SEALANT – TYPE AS REQUIRED
07 92 00.02	BACKER ROD AND SEALANT – TYPE AS REQUIRED
08 44 13.01	ALUMINUM CURTAIN WALL FRAME
08 44 13.03	PREFINISHED ALUMINUM FLASHING
08 44 13.04	BEAD OF SEALANT– CONTINUOUS– SET PREFINISHED ALUMINUM FLASHING IN SEALANT
08 44 13.20	SEALANT & BACKER ROD
08 44 13.50	ALUMINUM BREAK METAL – 0.090 THICK MIN – CUSTOM COLOR TO MATCH CURTAIN WALL FRAMING
09 22 16.02	METAL STUD 2-1/2 INCH – 16 INCHES O.C. MAX
09 22 16.03	METAL STUD 3-5/8 INCH – 16 INCHES O.C. MAX
09 29 00.01	5/8 INCH GYPSUM BOARD – LEVEL 4 FINISH

90% CONSTRUCTION DOCUMENTS

NOT FOR CONSTRUCTION

NORTH ARROW

KEYPLAN

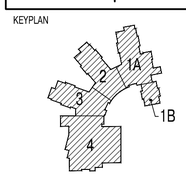

DRAWING NAME:

CURTAIN WALL DETAILS

DRAWN BY: RPM
REVIEWED BY: CLO
SCALE: As Noted
JOB NO.: 1403.00
DATE: July 25, 2016
DRAWING NUMBER: A6.27

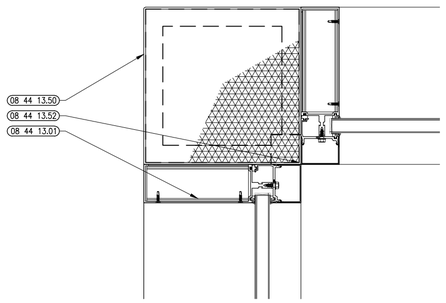

3 JAMB DETAIL
3"=1'-0"

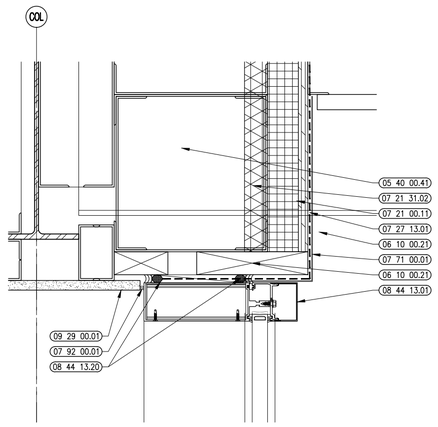

2 HEAD DETAIL
3"=1'-0"

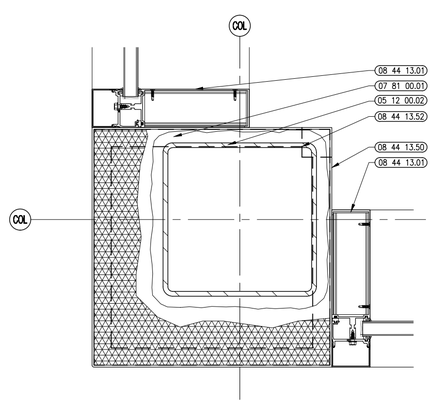

4 JAMB DETAIL
3"=1'-0"

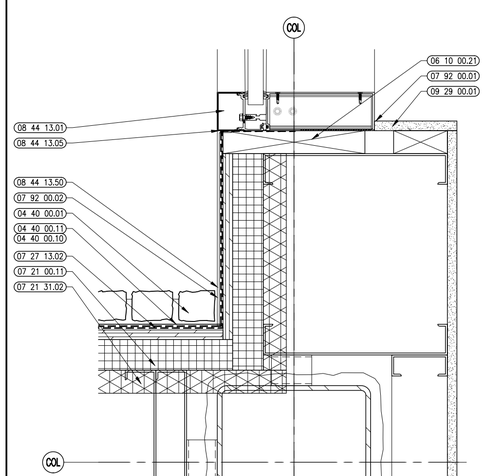

1 JAMB DETAIL
3"=1'-0"

526 Boston Post Rd Wayland, MA
508.358.0790 www.ai3architects.com

BEVERLY MIDDLE SCHOOL

CABOT STREET
BEVERLY, MA 01915

Copyright © 2016 Ai3 Architects, LLC

KEYNOTE LEGEND: (REFERENCE SHEETS A0.01 & A0.02 FOR MASTER KEYNOTE LIST AND KEYNOTES NOT LISTED)

04 40 00.01	STONE VENEER
04 40 00.10	GALVANIZED METAL LATH
04 40 00.11	SCRATCH COAT
05 12 00.02	STEEL COLUMN – SEE STRUCTURAL
05 40 00.41	STEEL STUD & TRACK – BOXED HEADER
06 10 00.21	WOOD BLOCKING – 2X FIRE RETARDANT TREATED – SIZE AS NOTED OR DRAWN
07 21 00.11	INSULATING NAIL BASE – 2 INCH – EXTERIOR WALL
07 21 31.02	FOAM INSULATION – SPRAYED-IN-PLACE – 1-1/2 INCH DEPTH BETWEEN STUDS
07 27 13.01	AIR/VAPOR BARRIER MEMBRANE – SELF-ADHERING
07 27 13.02	AIR/VAPOR BARRIER MEMBRANE – SELF-ADHERING – 2 LAYERS
07 71 00.01	FACTORY FABRICATED FASCIA TRIM/ROOF EDGE – CUSTOM COLOR
07 81 00.01	CEMENTITIOUS FIREPROOFING
07 92 00.01	JOINT SEALANT – TYPE AS REQUIRED
07 92 00.02	BACKER ROD AND SEALANT – TYPE AS REQUIRED
08 44 13.01	ALUMINUM CURTAIN WALL FRAME
08 44 13.05	PERIMETER SEALANT
08 44 13.20	SEALANT & BACKER ROD
08 44 13.50	ALUMINUM BREAK METAL – 0.090 THICK MIN – CUSTOM COLOR TO MATCH CURTAIN WALL FRAMING
08 44 13.52	STRUCTURAL TAPE AND SEALANT
09 29 00.01	5/8 INCH GYPSUM BOARD – LEVEL 4 FINISH

90% CONSTRUCTION DOCUMENTS

NOT FOR CONSTRUCTION

NORTH ARROW

KEYPLAN

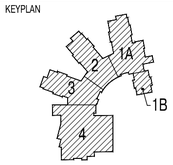

DRAWING NAME:

CURTAIN WALL DETAILS

DRAWN BY:	RPM
REVIEWED BY:	CLO
SCALE:	As Noted
JOB NO.:	1403.00
DATE:	July 25, 2016
DRAWING NUMBER:	A6.28

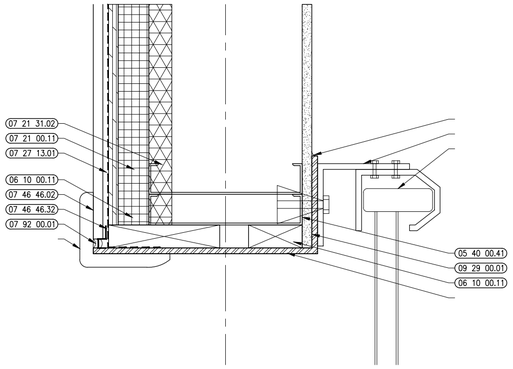

12 JAMB DETAIL
3" = 1'-0"

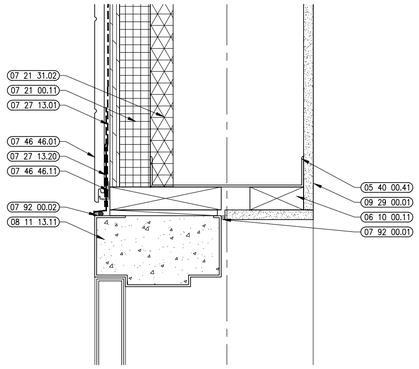

9 HEAD DETAIL
3" = 1'-0"

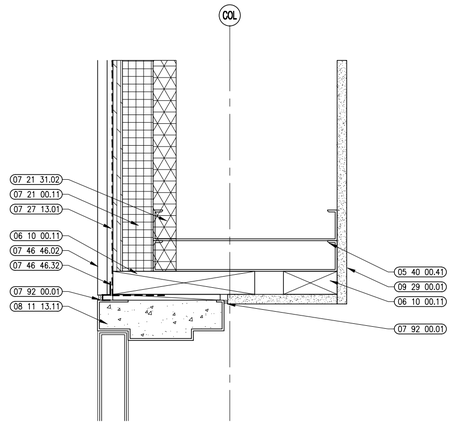

7 JAMB DETAIL
3" = 1'-0"

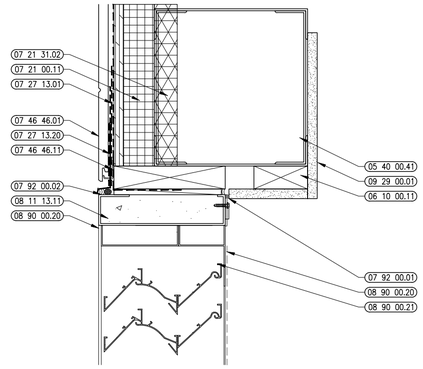

3 HEAD DETAIL
3" = 1'-0"

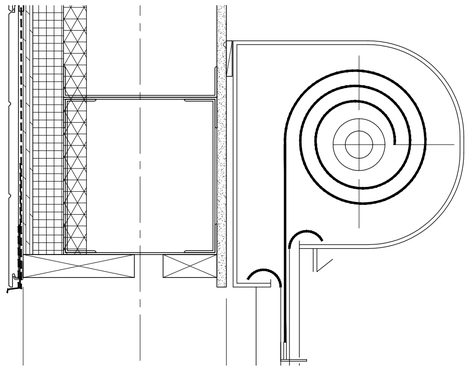

11 HEAD DETAIL
3" = 1'-0"

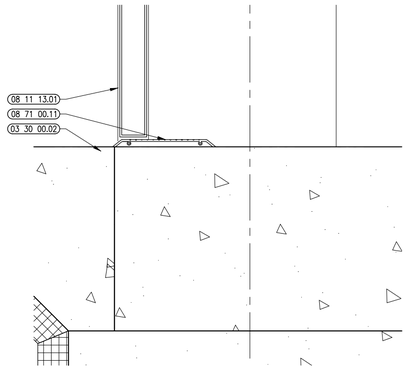

8 SILL DETAIL
3" = 1'-0"

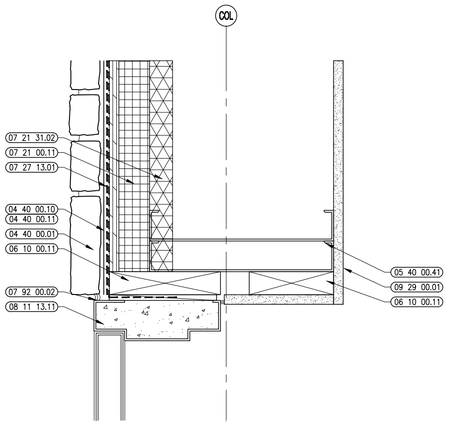

5 JAMB DETAIL
3" = 1'-0"

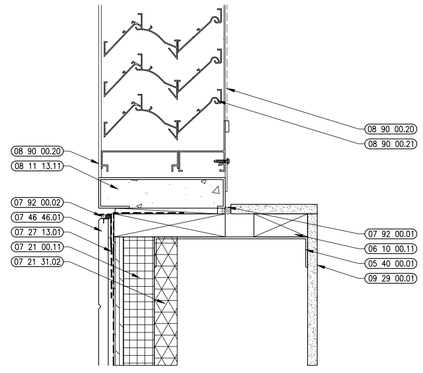

2 SILL DETAIL
3" = 1'-0"

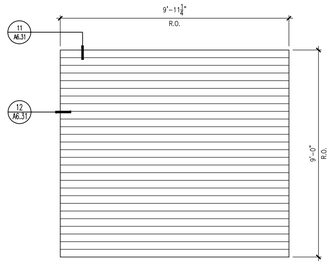

10 OVERHEAD DOOR TYPE 1
3/8" = 1'-0"

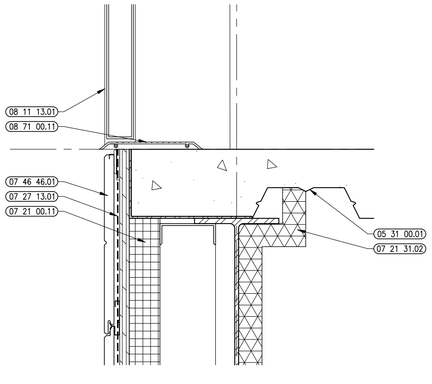

7 SILL DETAIL
3" = 1'-0"

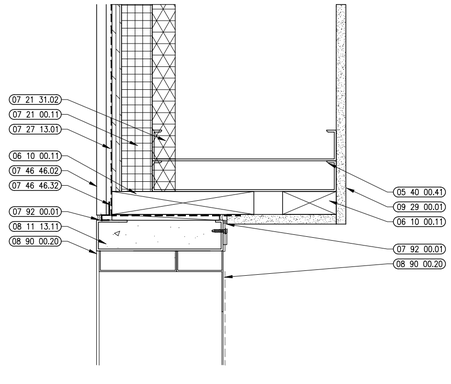

4 JAMB DETAIL
3" = 1'-0"

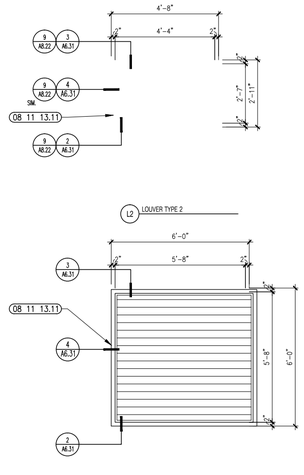

1 LOUVER TYPES
3/8" = 1'-0"

Ai3 architects
526 Boston Post Rd Wayland, MA
508.358.0790 www.ai3architects.com

BEVERLY MIDDLE SCHOOL

CABOT STREET
BEVERLY, MA 01915

Copyright © 2016 Ai3 Architects, LLC

KEYNOTE LEGEND: (REFERENCE SHEETS A0.01 & A0.02 FOR MASTER KEYNOTE LIST AND KEYNOTES NOT LISTED)

03 30 00.02	CONCRETE SLAB ON GRADE – SEE STRUCTURAL
04 40 00.01	STONE VENEER
04 40 00.10	GALVANIZED METAL LATH
04 40 00.11	SCRATCH COAT
05 31 00.01	COMPOSITE STEEL DECK – SEE STRUCTURAL
05 40 00.01	STEEL STUDS – 1 5/8 INCH – 16 INCHES O.C. MAX
05 40 00.41	STEEL STUD & TRACK – BOXED HEADER
06 10 00.11	WOOD BLOCKING – 2X PRESSURE TREATED – SIZE AS NOTED OR DRAWN
07 21 00.11	INSULATING NAIL BASE – 2 INCH – EXTERIOR WALL
07 21 31.02	FOAM INSULATION – SPRAYED-IN-PLACE – 1-1/2 INCH DEPTH BETWEEN STUDS
07 27 13.01	AIR/VAPOR BARRIER MEMBRANE – SELF-ADHERING
07 27 13.20	ALUMINUM FLASHING
07 46 46.01	MINERAL FIBER CEMENT SIDING PANEL
07 46 46.02	MINERAL FIBER CEMENT SMOOTH PANEL
07 46 46.11	STARTER TRACK/STRIP
07 46 46.32	SINGLE FLANGE SEALANT BACKER
07 92 00.01	JOINT SEALANT – TYPE AS REQUIRED
07 92 00.02	BACKER ROD AND SEALANT – TYPE AS REQUIRED
08 11 13.01	DOOR AND FRAME– SEE DOOR SCHEDULE
08 11 13.11	STEEL FRAME – SEE SCHEDULE FOR TYPES
08 71 00.11	ALUMINUM THRESHOLD
08 90 00.20	ALUMINUM LOUVER – SEE ELEVATIONS AND SPECIFICATION
08 90 00.21	BIRD SCREEN
09 29 00.01	5/8 INCH GYPSUM BOARD – LEVEL 4 FINISH

90% CONSTRUCTION DOCUMENTS

NOT FOR CONSTRUCTION

NORTH ARROW

KEYPLAN

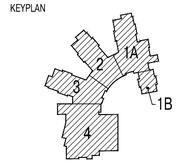

DRAWING NAME:

LOUVER, HOLLOW METAL AND OVERHEAD DOOR TYPE AND DETAILS

DRAWN BY:	RPM
REVIEWED BY:	CLO
SCALE:	As Noted
JOB NO.:	1403.00
DATE:	July 25, 2016
DRAWING NUMBER:	A6.31

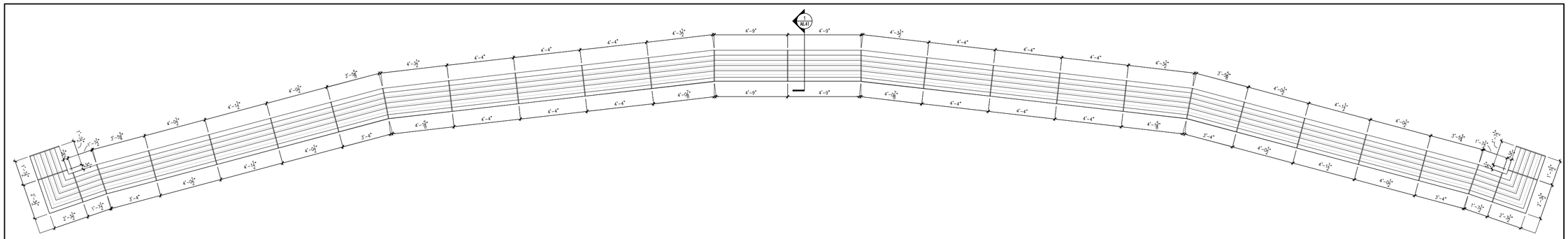

9 SUNSHADE PLAN TYPE 8
N.T.S.

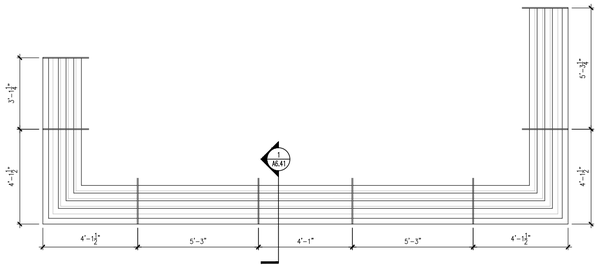

7B SUNSHADE PLAN TYPE 6B
3/8 = 1'-0"

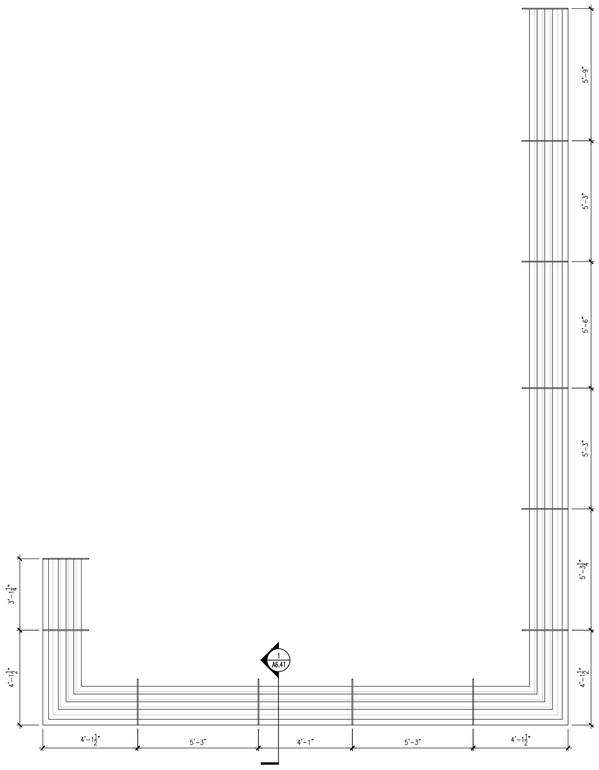

7A SUNSHADE PLAN TYPE 6A
3/8 = 1'-0"

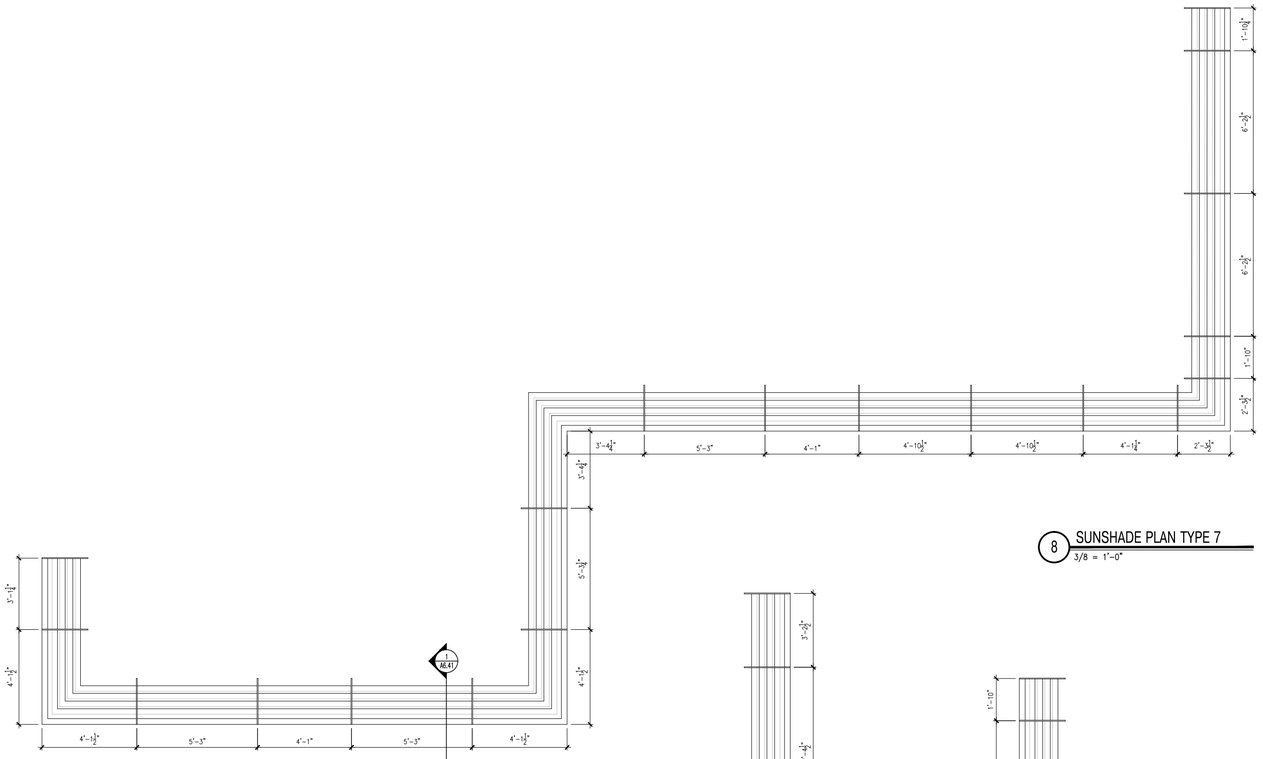

8 SUNSHADE PLAN TYPE 7
3/8 = 1'-0"

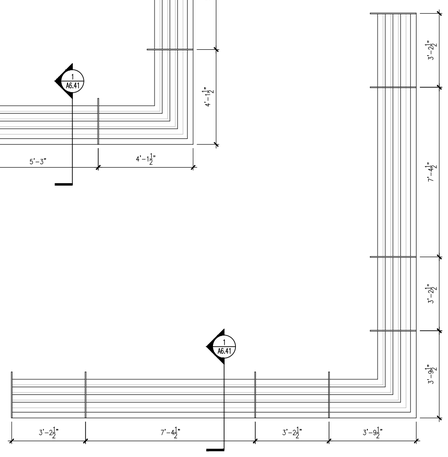

6 SUNSHADE PLAN TYPE 5
3/8 = 1'-0"

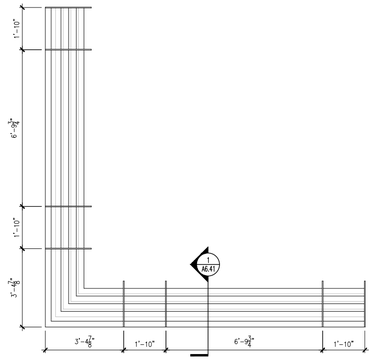

5 SUNSHADE PLAN TYPE 4
3/8 = 1'-0"

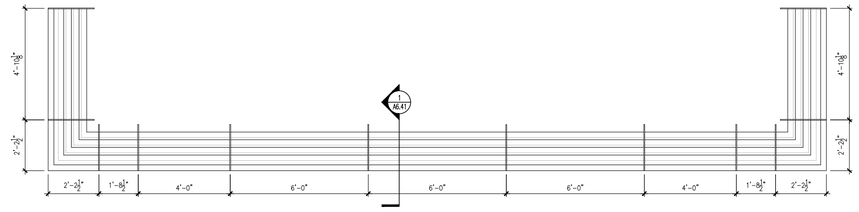

4 SUNSHADE PLAN TYPE 3
3/8 = 1'-0"

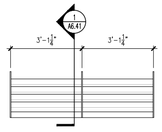

3 SUNSHADE PLAN TYPE 2
3/8 = 1'-0"

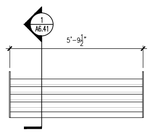

2 SUNSHADE PLAN TYPE 1
3/8 = 1'-0"

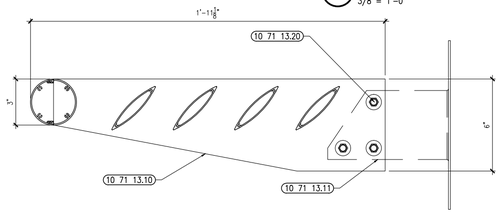

1 SUNSHADE & OUTRIGGER
3 = 1'-0"

ai3 architects
526 Boston Post Rd Wayland, MA
508.358.0790 www.ai3architects.com

BEVERLY MIDDLE SCHOOL

CABOT STREET
BEVERLY, MA 01915

Copyright © 2016 Ai3 Architects, LLC

KEYNOTE LEGEND: (REFERENCE SHEETS A0.01 & A0.02 FOR MASTER KEYNOTE LIST AND KEYNOTES NOT LISTED)

10 71 13.10	ALUMINUM SUNSHADE OUTRIGGER
10 71 13.11	ALUMINUM SUNSHADE MULLION CLIP
10 71 13.20	FASTENER – AS REQUIRED

90% CONSTRUCTION DOCUMENTS

NOT FOR CONSTRUCTION

NORTH ARROW

KEYPLAN

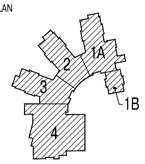

DRAWING NAME:

SUNSHADE TYPES

DRAWN BY:	RPM
REVIEWED BY:	CLO
SCALE:	As Noted
JOB NO.:	1403.00
DATE:	July 25, 2016
DRAWING NUMBER:	A6.41

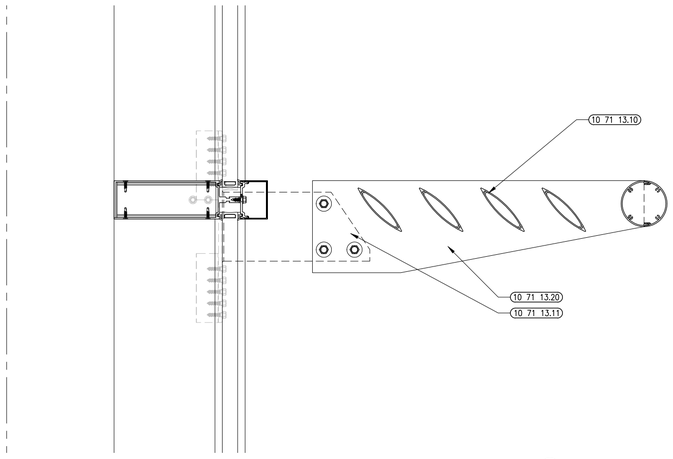

1D SECTION DETAIL
3"=1'-0"

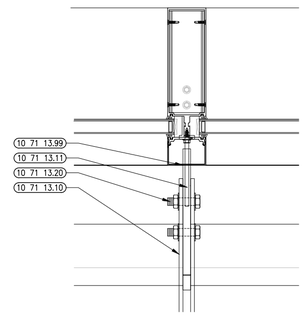

1C PLAN DETAIL
3"=1'-0"

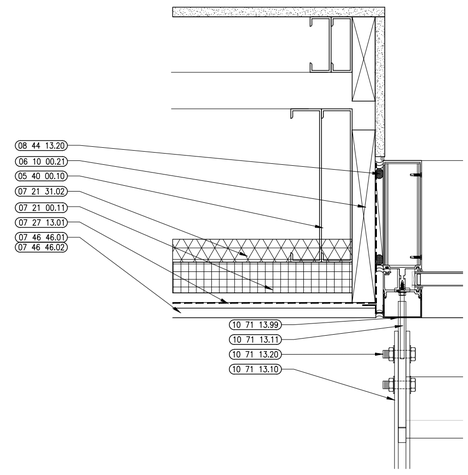

1B PLAN DETAIL
3"=1'-0"

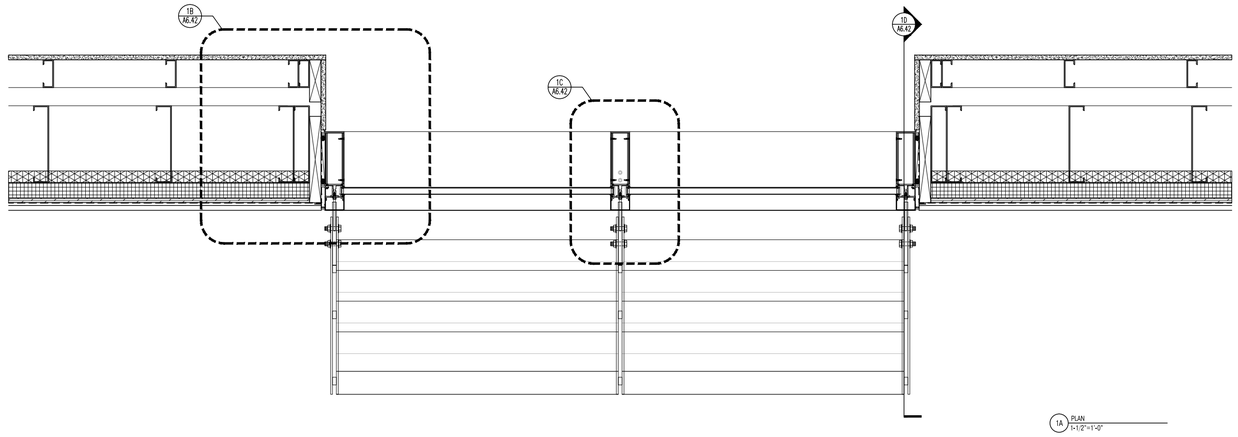

1A PLAN
1-1/2"=1'-0"

1 SUNSHADE & OUTRIGGER

526 Boston Post Rd Wayland, MA
508.358.0790 www.ai3architects.com

BEVERLY MIDDLE SCHOOL

CABOT STREET
BEVERLY, MA 01915

Copyright © 2016 Ai3 Architects, LLC

KEYNOTE LEGEND: (REFERENCE SHEETS A0.01 & A0.02 FOR MASTER KEYNOTE LIST AND KEYNOTES NOT LISTED)

05 40 00.10	STEEL STUDS – 10 INCH – 16 INCHES O.C. MAX
05 40 00.12	STEEL STUDS – 12 INCH – 16 INCHES O.C. MAX
06 10 00.21	WOOD BLOCKING – 2X FIRE RETARDANT TREATED – SIZE AS NOTED OR DRAWN
07 21 00.11	INSULATING NAIL BASE – 2 INCH – EXTERIOR WALL
07 21 31.02	FOAM INSULATION – SPRAYED–IN–PLACE – 1–1/2 INCH DEPTH BETWEEN STUDS
07 27 13.01	AIR/VAPOR BARRIER MEMBRANE – SELF–ADHERING
07 46 46.01	MINERAL FIBER CEMENT SIDING PANEL
07 46 46.02	MINERAL FIBER CEMENT SMOOTH PANEL
07 46 46.32	SINGLE FLANGE SEALANT BACKER
07 92 00.01	JOINT SEALANT – TYPE AS REQUIRED
08 44 13.20	SEALANT & BACKER ROD
09 29 00.01	5/8 INCH GYPSUM BOARD – LEVEL 4 FINISH
10 71 13.10	ALUMINUM SUNSHADE OUTRIGGER
10 71 13.11	ALUMINUM SUNSHADE MULLION CLIP
10 71 13.20	FASTENER – AS REQUIRED
10 71 13.99	SEALANT – TYPE AS REQUIRED

GENERAL NOTES:

1. LOCATE SUNSHADE SUPPORT CLIPS IN CENTER OF MULLIONS. FASTEN AS REQUIRED TO SUPPORT LOADS.
2. ALL DIMENSIONS TO CENTERLINE OF SUPPORT BRACKET/MULLION.
3. SUNSHADE CONTRACTOR SHALL DRILL HOLES IN ALL SUPPORT BRACKETS AS REQUIRED.

90% CONSTRUCTION DOCUMENTS

NOT FOR CONSTRUCTION

NORTH ARROW

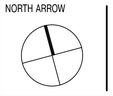

KEYPLAN

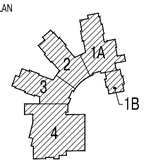

DRAWING NAME:

SUNSHADE DETAILS

DRAWN BY:	RPM
REVIEWED BY:	CLO
SCALE:	As Noted
JOB NO.:	1403.00
DATE:	July 25, 2016
DRAWING NUMBER:	A6.42

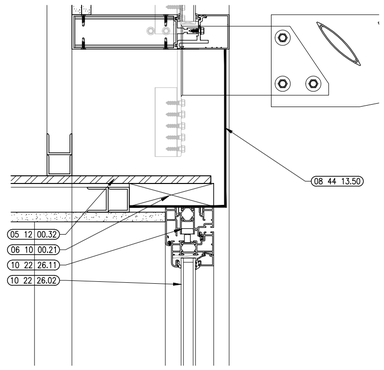

3 HEAD DETAIL
3"=1'-0"

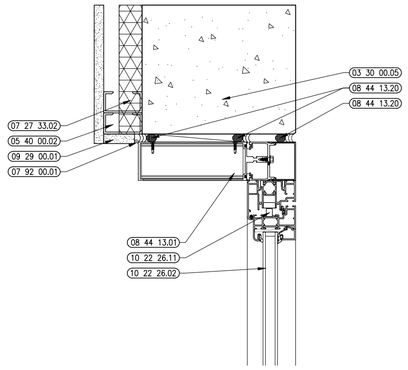

5 JAMB DETAIL
3"=1'-0"

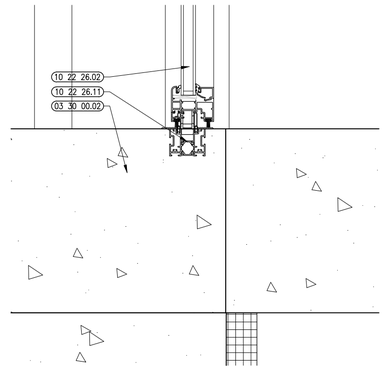

2 SILL DETAIL
3"=1'-0"

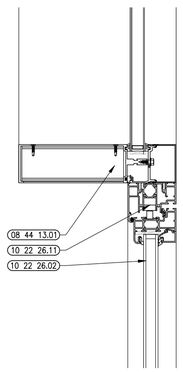

4 JAMB DETAIL
3"=1'-0"

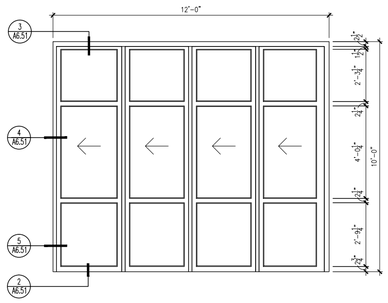

1 FOLDING GLASS WALL TYPE 1
3/8" = 1'-0"

Ai3 architects
526 Boston Post Rd Wayland, MA
508.358.0790 www.ai3architects.com

BEVERLY MIDDLE SCHOOL

CABOT STREET
BEVERLY, MA 01915

Copyright © 2016 Ai3 Architects, LLC

KEYNOTE LEGEND: (REFERENCE SHEETS A0.01 & A0.02 FOR MASTER KEYNOTE LIST AND KEYNOTES NOT LISTED)

03 30 00.02	CONCRETE SLAB ON GRADE – SEE STRUCTURAL
03 30 00.05	CONCRETE FOUNDATION – SEE STRUCTURAL
05 12 00.32	STEEL PLATE – SEE STRUCTURAL
05 40 00.02	STEEL STUDS – 2 1/2 INCH – 16 INCHES O.C. MAX
06 10 00.21	WOOD BLOCKING – 2X FIRE RETARDANT TREATED – SIZE AS NOTED OR DRAWN
07 27 33.02	FOAM INSULATION – SPRAYED-IN-PLACE – 1-1/2 INCH DEPTH BETWEEN STUDS
07 92 00.01	JOINT SEALANT – TYPE AS REQUIRED
08 44 13.01	ALUMINUM CURTAIN WALL FRAME
08 44 13.20	SEALANT & BACKER ROD
08 44 13.50	ALUMINUM BREAK METAL – 0.090 THICK MIN – CUSTOM COLOR TO MATCH CURTAIN WALL FRAMING
09 29 00.01	5/8 INCH GYPSUM BOARD – LEVEL 4 FINISH
10 22 26.02	EXTERIOR OPERABLE GLASS PARTITION PANEL
10 22 26.11	OPERABLE GLASS PARTITION PANEL TRACK ASSEMBLY

90% CONSTRUCTION DOCUMENTS

NOT FOR CONSTRUCTION

NORTH ARROW

KEYPLAN

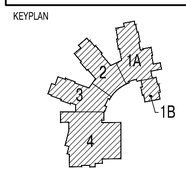

DRAWING NAME:

FOLDING GLASS WALL TYPES AND DETAILS

DRAWN BY:	RPM
REVIEWED BY:	CLO
SCALE:	As Noted
JOB NO.:	1403.00
DATE:	July 25, 2016
DRAWING NUMBER:	A6.51

ROOM FINISH SCHEDULE
THIRD FLOOR CONTINUED

ROOM #	ROOM NAME	FLOOR MATERIAL	BASE MATERIAL	WALL MATERIAL N	E	S	W	CEILING MATERIAL	HEIGHT	NOTES
C300	CORRIDOR	ET	PT	PT / P	PT / P	PT / P	PT / P	ACT-12 / EXP / P	REFER TO RCP	
C301	CORRIDOR	ET	PT	PT / P	PT / P	PT / P	PT / P	ACT-2 ; ACT-12 ; ACT-13 ; EXP	REFER TO RCP	
C302	CORRIDOR	ET	PT	PT / P	PT / P	PT / P	PT / P	ACT-2 ; ACT-12 ; ACT-13 ; EXP	REFER TO RCP	
C302A	CORRIDOR	ET	PT	PT / P	PT / P	PT / P	PT / P	ACT-2	REFER TO RCP	
C303	CORRIDOR	ET	PT	PT / P	PT / P	PT / P	PT / P	ACT-2 ; ACT-12 ; ACT-13 ; EXP	REFER TO RCP	
C304	CORRIDOR	ET	PT	PT / P	PT / P	PT / P	PT / P	EXP / P	REFER TO RCP	
T3-2A	BOYS TOILET	CT	CTB	CT	CT	CT	CT	ACT-4	REFER TO RCP	
T3-2B	TOILET	CT	CTB	CT	CT	CT	CT	ACT-4	REFER TO RCP	
T3-3A	GIRLS TOILET	CT	CTB	CT	CT	CT	CT	ACT-4	REFER TO RCP	
T3-3B	TOILET	CT	CTB	CT	CT	CT	CT	ACT-4	REFER TO RCP	
T3-4A	TOILET	CT	CTB	CT	CT	CT	CT	ACT-4	REFER TO RCP	
T3-4B	TOILET	CT	CTB	CT	CT	CT	CT	ACT-4	REFER TO RCP	
T3-5A	BOYS TOILET	CT	CTB	CT	CT	CT	CT	ACT-4	REFER TO RCP	
T3-5B	TOILET	CT	CTB	CT	CT	CT	CT	ACT-4	REFER TO RCP	
T3-6A	GIRLS TOILET	CT	CTB	CT	CT	CT	CT	ACT-4	REFER TO RCP	
T3-6B	TOILET	CT	CTB	CT	CT	CT	CT	ACT-4	REFER TO RCP	
ST1-3	STAIR 1	ET	PT/ CONC, PAINTED	WD	P	P	-	EXP	REFER TO RCP	
ST2-3	STAIR 2	R	RB	P	P	P	P	ACT-2/ P	REFER TO RCP	
ST3-3	STAIR 3	R	RB	P	P	P	P	ACT-2/ P	REFER TO RCP	
ST4-3	STAIR 4	R	RB	P	P	P	P	ACT-2/ P	REFER TO RCP	
ST5-3	STAIR 5	R	RB	P	P	P	P	ACT-2/ P	REFER TO RCP	
ST6-3	STAIR 6	R	RB	P	P	P	P	ACT-2/ P	REFER TO RCP	
ST7-3	STAIR 7	ET	PT/ CONC, PAINTED	P	P	WD	-	EXP	REFER TO RCP	

ROOM FINISH SCHEDULE
FOURTH FLOOR

ROOM #	ROOM NAME	FLOOR MATERIAL	BASE MATERIAL	WALL MATERIAL N	E	S	W	CEILING MATERIAL	HEIGHT	NOTES
402	ELEV NO. 1 EQUIP	CONC, PAINTED	RB	P	P	P	P	P	REFER TO RCP	
403	IDF	SCRF	RB	P	P	P	P	EXP	REFER TO RCP	
404	GENERAL CLASSROOM	VCT	RB	P	P	P	P	ACT-1	REFER TO RCP	
405	SMALL GROUP SEMINAR	VCT	RB	P	P	P	P	ACT-1	REFER TO RCP	
406	SMALL INCLUSION ROOM	ET	PT	WD	WD	WD	WD	ACT-13	REFER TO RCP	
407	GENERAL CLASSROOM	VCT	RB	P	P	P	P	ACT-1	REFER TO RCP	
408	READING CLASSROOM	CPT	RB	P	P	P	P	ACT-1	REFER TO RCP	
409	LANGUAGE BASED + 6TH GRADE	CPT	RB	P	P	P	P	ACT-1	REFER TO RCP	
411	SMALL GROUP ROOM/READING	VCT	RB	P	P	P	P	ACT-1	REFER TO RCP	
412	SMALL INCLUSION ROOM	ET	PT	WD	WD	WD	WD	ACT-13	REFER TO RCP	
413A	SCIENCE CLASSROOM 7/8 GRADES	VCT	RB	P	P	P	P	ACT-1	REFER TO RCP	
413B	PREP ROOM	VCT	RB	P	P	P	P	ACT-1	REFER TO RCP	
414	GENERAL CLASSROOM	VCT	RB	P	P	P	P	ACT-1	REFER TO RCP	
415	ACADEMIC TEAM ROOM	ET	RB	P	P	P	P	EXP / P	REFER TO RCP	
417A	INSTRUCTIONAL COACH (LITERACY)	CPT	RB	P	P	P	P	ACT-1	REFER TO RCP	
417B	INSTRUCTIONAL COACH (MATH)	CPT	RB	P	P	P	P	ACT-1	REFER TO RCP	
418	SUPERVISORY SPARE OFFICE	CPT	RB	P	P	P	P	ACT-2/ P	REFER TO RCP	
419	IDF	SCRF	RB	P	P	P	P	EXP	REFER TO RCP	
419B	CUSTODIAL	CONC, PAINTED	RB	P	P	P	P	EXP	REFER TO RCP	
420	TEACHERS COLLABORATION ROOM	CPT	RB	P	P	P	P	ACT-1 / ACT-2 / P	REFER TO RCP	
421A	SSP + 6TH GRADE	CPT	RB	P	P	P	P	ACT-1	REFER TO RCP	
421B	SSP OFFICE	CPT	RB	P	P	P	P	ACT-1	REFER TO RCP	
422	GENERAL CLASSROOM	VCT	RB	P	P	P	P	ACT-1	REFER TO RCP	
423	SMALL GROUP SEMINAR	VCT	RB	P	P	P	P	ACT-1	REFER TO RCP	
424	SMALL INCLUSION ROOM	ET	PT	WD	WD	WD	WD	ACT-13	REFER TO RCP	
425	GENERAL CLASSROOM	VCT	RB	P	P	P	P	ACT-1	REFER TO RCP	
426	THERAPEUTIC LEARNING 7/8 GRADES	CPT	RB	P	P	P	P	ACT-1	REFER TO RCP	
427	SBI SS	CPT	RB	P	P	P	P	ACT-1	REFER TO RCP	
429	SMALL GROUP ROOM READING	VCT	RB	P	P	P	P	ACT-1	REFER TO RCP	
430	SMALL INCLUSION ROOM	ET	PT	WD	WD	WD	WD	ACT-13	REFER TO RCP	
431A	SCIENCE CLASSROOM 7/8 GRADES	VCT	RB	P	P	P	P	ACT-1	REFER TO RCP	
431B	PREP ROOM	VCT	RB	P	P	P	P	ACT-1	REFER TO RCP	
432	GENERAL CLASSROOM	VCT	RB	P	P	P	P	ACT-1	REFER TO RCP	
433	ACADEMIC TEAM ROOM	ET	RB	P	P	P	P	EXP / P	REFER TO RCP	
435	ACADEMIC TEAM ROOM	ET	RB	P	P	P	P	EXP / P	REFER TO RCP	
436	GENERAL CLASSROOM	VCT	RB	P	P	P	P	ACT-1	REFER TO RCP	
437	SMALL GROUP ROOM READING	VCT	RB	P	P	P	P	ACT-1	REFER TO RCP	
438	SMALL INCLUSION ROOM	ET	PT	WD	WD	WD	WD	ACT-13	REFER TO RCP	
439A	SCIENCE CLASSROOM 7/8 GRADES	VCT	RB	P	P	P	P	ACT-1	REFER TO RCP	
439B	PREP ROOM	VCT	RB	P	P	P	P	ACT-1	REFER TO RCP	
441	GENERAL CLASSROOM	VCT	RB	P	P	P	P	ACT-1	REFER TO RCP	
442	SMALL GROUP SEMINAR	VCT	RB	P	P	P	P	ACT-1	REFER TO RCP	
443	SMALL INCLUSION ROOM	ET	PT	WD	WD	WD	WD	ACT-13	REFER TO RCP	
444	GENERAL CLASSROOM	VCT	RB	P	P	P	P	ACT-1	REFER TO RCP	
445	READING CLASSROOM	VCT	RB	P	P	P	P	ACT-1	REFER TO RCP	
446	IDF	SCRF	RB	P	P	P	P	EXP	REFER TO RCP	
447	CUSTODIAL	CONC, PAINTED	RB	P	P	P	P	EXP	REFER TO RCP	
448A	ELEC	CONC, PAINTED	RB	P	P	P	P	EXP	REFER TO RCP	
448B	EMER ELEC	CONC, PAINTED	RB	P	P	P	P	EXP	REFER TO RCP	
449	ELEV NO. 2 EQUIP	CONC, PAINTED	RB	P	P	P	P	EXP	REFER TO RCP	
C400	CORRIDOR	ET	PT	PT / P	PT / P	PT / P	PT / P	ACT-12 / EXP / P	REFER TO RCP	
C401	CORRIDOR	ET	PT	PT / P	PT / P	PT / P	PT / P	ACT-2 ; ACT-12 ; ACT-13 ; EXP	REFER TO RCP	
C402	CORRIDOR	ET	PT	PT / P	PT / P	PT / P	PT / P	ACT-2 ; ACT-12 ; ACT-13 ; EXP	REFER TO RCP	
C402A	CORRIDOR	ET	PT	PT / P	PT / P	PT / P	PT / P	ACT-2	REFER TO RCP	
C403	CORRIDOR	ET	PT	PT / P	PT / P	PT / P	PT / P	ACT-2 ; ACT-12 ; ACT-13 ; EXP	REFER TO RCP	
T4-2A	BOYS TOILET	CT	CTB	CT	CT	CT	CT	ACT-4	REFER TO RCP	
T4-2B	TOILET	CT	CTB	CT	CT	CT	CT	ACT-4	REFER TO RCP	
T4-3A	GIRLS TOILET	CT	CTB	CT	CT	CT	CT	ACT-4	REFER TO RCP	
T4-3B	TOILET	CT	CTB	CT	CT	CT	CT	ACT-4	REFER TO RCP	
T4-4A	TOILET	CT	CTB	CT	CT	CT	CT	ACT-4	REFER TO RCP	
T4-4B	TOILET	CT	CTB	CT	CT	CT	CT	ACT-4	REFER TO RCP	
T4-5A	BOYS TOILET	CT	CTB	CT	CT	CT	CT	ACT-4	REFER TO RCP	
T4-5B	TOILET	CT	CTB	CT	CT	CT	CT	ACT-4	REFER TO RCP	
T5-6A	GIRLS TOILET	CT	CTB	CT	CT	CT	CT	ACT-4	REFER TO RCP	
T5-6B	TOILET	CT	CTB	CT	CT	CT	CT	ACT-4	REFER TO RCP	
ST1-4	STAIR 1	ET	PT/ CONC, PAINTED	WD	P	P	-	EXP	REFER TO RCP	
ST2-4	STAIR 2	R	RB	P	P	P	P	ACT-2	REFER TO RCP	
ST3-4	STAIR 3	R	RB	P	P	P	P	ACT-2	REFER TO RCP	
ST4-4	STAIR 4	R	RB	P	P	P	P	ACT-2	REFER TO RCP	
ST5-4	STAIR 5	R	RB	P	P	P	P	ACT-2	REFER TO RCP	
ST6-4	STAIR 6	R	RB	P	P	P	P	ACT-2	REFER TO RCP	
ST7-4	STAIR 7	ET	PT/ CONC, PAINTED	P	P	WD	-	EXP	REFER TO RCP	

FINISH LEGEND

AC	ACOUSTIC CLOUD (REFER TO SPEC XX XX XX)	P	PAINTED (REFER TO SPEC XX XX XX)
ACT	ACOUSTIC CEILING TILE (REFER TO SPEC 09 51 00)	PT	PORCELAIN PAVER TILE (SECTION 09 30 19)
CMT	CERAMIC MOSAIC FLOOR TILE (REFER TO SPEC XX XX XX)	QT	QUARRY TILE (REFER TO SPEC XX XX XX)
CMTB	CERAMIC MOSAIC TILE BASE (REFER TO SPEC XX XX XX)	R	RUBBER FLOOR TILE (REFER TO SPEC XX XX XX)
CONC. PAINTED	CONCRETE PAINTED WITH EPOXY DECK ENAMEL (SECTION 09 96 00)	RB	RUBBER BASE (REFER TO SPEC XX XX XX)
CPT	CARPET TILE (REFER TO SPEC XX XX XX)	SCRF	STATIC-CONTROL RESILIENT FLOOR (REFER TO SPEC XX XX XX)
CT	CERAMIC WALL TILE (REFER TO SPEC XX XX XX)	TFE	THIN-FILM EPOXY FLOOR (REFER TO SPEC XX XX XX)
EP	EPOXY PAINT (SECTION 09 91 00)	WAB	WOOD ATHLETIC BASE (REFER TO SPEC XX XX XX)
ET	EPOXY TERRAZZO (REFER TO SPEC XX XX XX)	WAF	WOOD ATHLETIC FLOOR (REFER TO SPEC XX XX XX)
EXP	EXPOSED CEILING (SEE NOTE 3) (REFER TO SPEC 09 90 00)	WD	WOOD (SECTION 06 20 00)
LAM	LAMINATED FLOORING (SECTION 06 20 00)	WDC	WOOD CLOUD (REFER TO SPEC XX XX XX)
MAT	ENTRY MATS (REFER TO SPEC XX XX XX)	WDS	WOOD SLATS (REFER TO SPEC XX XX XX)
		VCT	VINYL COMPOSITION TILE (09 65 19)

GENERAL NOTES

1. GENERAL CONTRACTOR TO COORDINATE ALL SLAB DEPRESSIONS AS REQUIRED WITH ALL FINISH FLOOR SYSTEMS AND MATERIALS SPECIFIED.
2. SPACES NOT LISTED SHALL RECEIVE THE SAME FINISHES AS SIMILAR FUNCTION SPACES.
3. " EXP " DENOTES EXPOSED TO VIEW STRUCTURAL STEEL, METAL DECK, FABRICATED METAL, DUCTWORK, PIPES & CONDUIT REQUIRED TO BE PAINTED.
4. EXPOSED CONCRETE FLOORS TO BE POLISHED.
5. REFER TO G0.01 GENERAL INFORMATION AND CODE ANALYSIS FOR CEMENTIOUS FIRE PROOFING LOCATIONS.
6. PROVIDE ACT RETENTION CLIPS AT ALL TOILET ROOMS, VESTIBULES & FIRE RATED SPACES.
7. AREAS DIRECTLY UNDER PERMANENT SEATING IN AUDITORIUM ARE TO BE CONC. PAINTED WITH EPOXY DECK ENAMEL. ALL OTHER AREAS TO BE CONCRETE.
8. PROVIDE CERAMIC TILE ON ALL WALLS OF GANG TOILET ROOMS. TILE TO RUN FROM FINISH FLOOR TO 6' MINIMUM ABOVE CEILING. PATTERN CONSISTS OF ONE BASE COLOR, ONE FIELD COLOR AND MIN. OF 2 ACCENT COLORS (UP TO 15% ACCENT).
9. STAGE FLOOR WILL BE PAINTED MASONITE BOARD, EXCEPT ON STAGE PERIMETER WHERE THE FLOOR PLAN IDENTIFIES A TRANSITION TO TRIP WOOD FLOORING.
10. FURNISH AND INSTALL RUBBER FLOORING AT ALL ELEVATORS. BY SECTION 09 65 23. PROVIDE SAME TYPE AND COLOR RUBBER FLOORING MATERIAL AS USED AT THE STAIR LANDINGS.
11. FURNISH AND INSTALL RUBBER FLOORING AT ALL ELEVATORS. PROVIDE SAME TYPE AND COLOR RUBBER FLOORING MATERIAL AS USED AT THE STAIR LANDINGS.
12. CARDINAL DIRECTIONS IN ROOM FINISH SCHEDULE REFER TO ENLARGED FLOOR PLANS, NOT BUILDING ORIENTATION.

ROOM FINISH SCHEDULE
SECOND FLOOR

ROOM #	ROOM NAME	FLOOR MATERIAL	BASE MATERIAL	WALL MATERIAL N	E	S	W	CEILING MATERIAL	HEIGHT	NOTES
200	GUIDANCE NURSE RECEPTION	ET	RB	P	P	P	P	ACT-2 / P	REFER TO RCP	
200A	GUIDANCE WAITING	CPT	RB	P	P	P	P	ACT-2 / P	REFER TO RCP	
200B	GUIDANCE OFFICE	CPT	RB	P	P	P	P	ACT-2	REFER TO RCP	
200C	GUIDANCE OFFICE	CPT	RB	P	P	P	P	ACT-2	REFER TO RCP	
200D	GUIDANCE OFFICE	CPT	RB	P	P	P	P	ACT-2	REFER TO RCP	
200E	GUIDANCE OFFICE	CPT	RB	P	P	P	P	ACT-2	REFER TO RCP	
200F	GUIDANCE STOREROOM	CPT	RB	P	P	P	P	EXP	REFER TO RCP	
201A	NURSE SUITE	VCT	RB	P	P	P	P	ACT-2 / P	REFER TO RCP	
201B	EXAM SCREEN	VCT	RB	P	P	P	P	ACT-4	REFER TO RCP	
201C	EXAM ROOM	VCT	RB	P	P	P	P	ACT-4	REFER TO RCP	
201D	NURSES OFFICE	VCT	RB	P	P	P	P	ACT-2	REFER TO RCP	
201E	RESTING	VCT	RB	P	P	P	P	ACT-2	REFER TO RCP	
201F	RESTING	VCT	RB	P	P	P	P	ACT-2	REFER TO RCP	
203	IDF	SCRF	RB	P	P	P	P	EXP	REFER TO RCP	
204	GENERAL CLASSROOM	VCT	RB	P	P	P	P	ACT-1	REFER TO RCP	
205	SMALL GROUP SEMINAR	VCT	RB	P	P	P	P	ACT-1	REFER TO RCP	
206	SMALL INCLUSION ROOM	ET	PT	WD	WD	WD	WD	ACT-13	REFER TO RCP	
207	GENERAL CLASSROOM	VCT	RB	P	P	P	P	ACT-1	REFER TO RCP	
208	READING CLASSROOM	CPT	RB	P	P	P	P	ACT-1	REFER TO RCP	
209	LANGUAGE BASED + 6TH GRADE	CPT	RB	P	P	P	P	ACT-1	REFER TO RCP	
210	LANGUAGE CLASSROOM	VCT	RB	P	P	P	P	ACT-1	REFER TO RCP	
211	SMALL GROUP ROOM/READING	VCT	RB	P	P	P	P	ACT-1	REFER TO RCP	
212	SMALL INCLUSION ROOM	ET	PT	WD	WD	WD	WD	ACT-13	REFER TO RCP	
212A	SCIENCE CLASSROOM 5/6 GRADES	VCT	RB	P	P	P	P	ACT-1	REFER TO RCP	
212B	PREP ROOM	VCT	RB	P	P	P	P	ACT-1	REFER TO RCP	
214	GENERAL CLASSROOM	VCT	RB	P	P	P	P	ACT-1	REFER TO RCP	
215	ACADEMIC TEAM ROOM	ET	RB	P	P	P	P	EXP / P	REFER TO RCP	
217	GUIDANCE MEETING	CPT	RB	P	P	P	P	ACT-1	REFER TO RCP	
217B	SPED MEETING ROOM	CPT	RB	P	P	P	P	ACT-1	REFER TO RCP	
218	SUPERVISORY SPARE OFFICE	CPT	RB	P	P	P	P	ACT-2/ P	REFER TO RCP	
219	IDF	SCRF	RB	P	P	P	P	EXP	REFER TO RCP	
219B	CUSTODIAL	CONC, PAINTED	RB	P	P	P	P	EXP	REFER TO RCP	
220	TEACHERS COLLABORATION ROOM	CPT	RB	P	P	P	P	ACT-1 / ACT-2 / P	REFER TO RCP	
221A	SSP + 6TH GRADE	CPT	RB	P	P	P	P	ACT-1	REFER TO RCP	
221B	SSP OFFICE	CPT	RB	P	P	P	P	ACT-1	REFER TO RCP	
222	GENERAL CLASSROOM	VCT	RB	P	P	P	P	ACT-1	REFER TO RCP	
223	SMALL GROUP SEMINAR	VCT	RB	P	P	P	P	ACT-1	REFER TO RCP	
224	SMALL INCLUSION ROOM	ET	PT	WD	WD	WD	WD	ACT-13	REFER TO RCP	
225	GENERAL CLASSROOM	VCT	RB	P	P	P	P	ACT-1	REFER TO RCP	
226	LEARNING CENTER + 5/6 GRADES	VCT	RB	P	P	P	P	ACT-1	REFER TO RCP	
227	SBI ELA	VCT	RB	P	P	P	P	ACT-1	REFER TO RCP	
228A	READING CLASSROOM	CPT	RB	P	P	P	P	ACT-1	REFER TO RCP	
228B	READING CLASSROOM	CPT	RB	P	P	P	P	ACT-1	REFER TO RCP	
229	SMALL GROUP ROOM/READING	VCT	RB	P	P	P	P	ACT-1	REFER TO RCP	
230	SMALL INCLUSION ROOM	ET	PT	WD	WD	WD	WD	ACT-13	REFER TO RCP	
231A	SCIENCE CLASSROOM 5/6 GRADES	VCT	RB	P	P	P	P	ACT-1	REFER TO RCP	
231B	PREP ROOM	VCT	RB	P	P	P	P	ACT-1	REFER TO RCP	
232	GENERAL CLASSROOM	VCT	RB	P	P	P	P	ACT-1	REFER TO RCP	
233	ACADEMIC TEAM ROOM	ET	RB	P	P	P	P	EXP / P	REFER TO RCP	
235	ACADEMIC TEAM ROOM	ET	RB	P	P	P	P	EXP / P	REFER TO RCP	
236	LANGUAGE CLASSROOM	VCT	RB	P	P	P	P	ACT-1	REFER TO RCP	
237	SMALL GROUP ROOM/READING	VCT	RB	P	P	P	P	ACT-1	REFER TO RCP	
238	SMALL INCLUSION ROOM	ET	PT	WD	WD	WD	WD	ACT-13	REFER TO RCP	
239A	SCIENCE CLASSROOM 5/6 GRADES	VCT	RB	P	P	P	P	ACT-1	REFER TO RCP	
239B	PREP ROOM	VCT	RB	P	P	P	P	ACT-1	REFER TO RCP	
240	GENERAL CLASSROOM	VCT	RB	P	P	P	P	ACT-1	REFER TO RCP	
241	GENERAL CLASSROOM	VCT	RB	P	P	P	P	ACT-1	REFER TO RCP	
242	SMALL GROUP SEMINAR	VCT	RB	P	P	P	P	ACT-1	REFER TO RCP	
243	SMALL INCLUSION ROOM	ET	PT	WD	WD	WD	WD	ACT-13	REFER TO RCP	
244	GENERAL CLASSROOM	VCT	RB	P	P	P	P	ACT-1	REFER TO RCP	
245A	SELF-CONTAINED SPED	CPT	RB	P	P	P	P	ACT-1	REFER TO RCP	
245B	SPED QUIET ROOM	CPT	RB	P	P	P	P	ACT-1	REFER TO RCP	
246	IDF	SCRF	RB	P	P	P	P	EXP	REFER TO RCP	
247	SPEECH	CPT	RB	P	P	P	P	ACT-1	REFER TO RCP	
248	SPED CONFERENCE ROOM	CPT	RB	P	P	P	P	ACT-1	REFER TO RCP	
249	SPECIAL EDUCATION CHAIR OFFICE	CPT	RB	P	P	P	P	ACT-1	REFER TO RCP	
C200	CORRIDOR	ET	PT	PT / P	PT / P	PT / P	PT / P	ACT-12 / EXP / P	REFER TO RCP	
C201	CORRIDOR	ET	PT	PT / P	PT / P	PT / P	PT / P	ACT-2 ; ACT-12 ; ACT-13 ; EXP	REFER TO RCP	
C202	CORRIDOR	ET	PT	PT / P	PT / P	PT / P	PT / P	ACT-2 ; ACT-12 ; ACT-13 ; EXP	REFER TO RCP	
C202A	CORRIDOR	ET	PT	PT / P	PT / P	PT / P	PT / P	ACT-2	REFER TO RCP	
C203	CORRIDOR	ET	PT	PT / P	PT / P	PT / P	PT / P	ACT-2 ; ACT-12 ; ACT-13 ; EXP	REFER TO RCP	
C204	CORRIDOR	ET	PT	PT / P	PT / P	PT / P	PT / P	EXP / P	REFER TO RCP	
T2-1	TOILET	CT	CTB	CT	CT	CT	CT	P/ ACT-4	REFER TO RCP	
T2-2A	BOYS TOILET	CT	CTB	CT	CT	CT	CT	ACT-4	REFER TO RCP	
T2-2B	TOILET	CT	CTB	CT	CT	CT	CT	ACT-4	REFER TO RCP	
T2-3A	GIRLS TOILET	CT	CTB	CT	CT	CT	CT	ACT-4	REFER TO RCP	
T2-3B	TOILET	CT	CTB	CT	CT	CT	CT	ACT-4	REFER TO RCP	
T2-4A	TOILET	CT	CTB	CT	CT	CT	CT	ACT-4	REFER TO RCP	
T2-4B	TOILET	CT	CTB	CT	CT	CT	CT	ACT-4	REFER TO RCP	
T2-5A	BOYS TOILET	CT	CTB	CT	CT	CT	CT	ACT-4	REFER TO RCP	
T2-5B	TOILET	CT	CTB	CT	CT	CT	CT	ACT-4	REFER TO RCP	
T2-6A	GIRLS TOILET	CT	CTB	CT	CT	CT	CT	ACT-4	REFER TO RCP	
T2-6B	TOILET	CT	CTB	CT	CT	CT	CT	ACT-4	REFER TO RCP	
T2-7	TOILET	CT	CTB	CT	CT	CT	CT	ACT-4	REFER TO RCP	
ST1-2	STAIR 1	ET	PT/ CONC, PAINTED	WD	P	P	-	EXP	REFER TO RCP	
ST2-2	STAIR 2	R	RB	P	P	P	P	ACT-2/ P	REFER TO RCP	
ST3-2	STAIR 3	R	RB	P	P	P	P	ACT-2/ P	REFER TO RCP	
ST4-2	STAIR 4	R	RB	P	P	P	P	ACT-2/ P	REFER TO RCP	
ST5-2	STAIR 5	R	RB	P	P	P	P	ACT-2/ P	REFER TO RCP	
ST6-2	STAIR 6	R	RB	P	P	P	P	ACT-2/ P	REFER TO RCP	
ST7-2	STAIR 7	ET	PT/ CONC, PAINTED	P	P	WD	-	EXP/ WD	REFER TO RCP	

ROOM FINISH SCHEDULE
THIRD FLOOR

ROOM #	ROOM NAME	FLOOR MATERIAL	BASE MATERIAL	WALL MATERIAL N	E	S	W	CEILING MATERIAL	HEIGHT	NOTES
302	CUSTODIAL	CONC, PAINTED	RB	P	P	P	P	EXP	REFER TO RCP	
303	ELEC	CONC, PAINTED	RB	P	P	P	P	EXP	REFER TO RCP	
304	GENERAL CLASSROOM	VCT	RB	P	P	P	P	ACT-1	REFER TO RCP	
305	SMALL GROUP SEMINAR	VCT	RB	P	P	P	P	ACT-1	REFER TO RCP	
306	SMALL INCLUSION ROOM	ET	PT	WD	WD	WD	WD	ACT-13	REFER TO RCP	
307	GENERAL CLASSROOM	VCT	RB	P	P	P	P	ACT-1	REFER TO RCP	
308	ELL + ENGLISH LANGUAGE LEARNERS	CPT	RB	P	P	P	P	ACT-1	REFER TO RCP	
309	LANGUAGE BASED + 7TH GRADE	CPT	RB	P	P	P	P	ACT-1	REFER TO RCP	
310	GENERAL CLASSROOM	VCT	RB	P	P	P	P	ACT-1	REFER TO RCP	
311	SMALL GROUP ROOM/READING	VCT	RB	P	P	P	P	ACT-1	REFER TO RCP	
312	SMALL INCLUSION ROOM	ET	PT	WD	WD	WD	WD	ACT-13	REFER TO RCP	
313A	SCIENCE CLASSROOM 7/8 GRADES	VCT	RB	P	P	P	P	ACT-1	REFER TO RCP	
313B	PREP ROOM	VCT	RB	P	P	P	P	ACT-1	REFER TO RCP	
314	GENERAL CLASSROOM	VCT	RB	P	P	P	P	ACT-1	REFER TO RCP	
315	ACADEMIC TEAM ROOM	ET	RB	P	P	P	P	EXP / P	REFER TO RCP	
316	MULTIMEDIA & VIDEO APPLICATIONS LAB	TFE	RB	P	P	P	P	EXP	REFER TO RCP	
317A	CAFETERIA DINING 5-6 GRADES	ET	PT / CONC, PAINTED	-	-	PT / P	-	ACT-14 / ACT-21 / EXP	REFER TO RCP	
317B	MEDIA READING AREA	ET	PT / CONC, PAINTED	-	-	PT / P	-	ACT-14 / ACT-21 / EXP	REFER TO RCP	
317C	MEDIA READING AREA	ET	PT / CONC, PAINTED	-	PT / P	-	-	ACT-14 / ACT-21 / EXP	REFER TO RCP	
317D	SCHOOL ADJUSTMENT COUNSELOR	CPT	RB	P	P	P	P	ACT-1	REFER TO RCP	
317E	SCHOOL ADJUSTMENT COUNSELOR	CPT	RB	P	P	P	P	ACT-1	REFER TO RCP	
318	ASSISTANT PRINCIPAL OFFICE AP2	CPT	RB	P	P	P	P	ACT-2	REFER TO RCP	
319	ELEC	CONC, PAINTED	RB	P	P	P	P	EXP	REFER TO RCP	
319A	SOUND CLOSET	SCRF	RB	P	P	P	P	EXP	REFER TO RCP	
319B	CUSTODIAL	CONC, PAINTED	RB	P	P	P	P	EXP	REFER TO RCP	
320	TEACHERS COLLABORATION ROOM	CPT	RB	P	P	P	P	ACT-1 / ACT-2 / P	REFER TO RCP	
321A	SSP + 7TH GRADE	CPT	RB	P	P	P	P	ACT-1	REFER TO RCP	
321B	SSP OFFICE	CPT	RB	P	P	P	P	ACT-1	REFER TO RCP	
322	GENERAL CLASSROOM	VCT	RB	P	P	P	P	ACT-1	REFER TO RCP	
323	SMALL GROUP SEMINAR	VCT	RB	P	P	P	P	ACT-1	REFER TO RCP	
324	SMALL INCLUSION ROOM	ET	PT	WD	WD	WD	WD	ACT-13	REFER TO RCP	
325	GENERAL CLASSROOM	VCT	RB	P	P	P	P	ACT-1	REFER TO RCP	
326	LEARNING CENTER + 7/8 GRADES	CPT	RB	P	P	P	P	ACT-1	REFER TO RCP	
327	SBI MATH	CPT	RB	P	P	P	P	ACT-1	REFER TO RCP	
328	READING CLASSROOM	VCT	RB	P	P	P	P	ACT-1	REFER TO RCP	
329	SMALL GROUP ROOM/READING	VCT	RB	P	P	P	P	ACT-1	REFER TO RCP	
330	SMALL INCLUSION ROOM	ET	PT	WD	WD	WD	WD	ACT-13	REFER TO RCP	
331A	SCIENCE CLASSROOM 7/8 GRADES	VCT	RB	P	P	P	P	ACT-1	REFER TO RCP	
331B	PREP ROOM	VCT	RB	P	P	P	P	ACT-1	REFER TO RCP	
332	GENERAL CLASSROOM	VCT	RB	P	P	P	P	ACT-1	REFER TO RCP	
333	ACADEMIC TEAM ROOM	ET	RB	P	P	P	P	EXP / P	REFER TO RCP	
334A	ART CLASSROOM	VCT	RB	P	P	P	P	EXP	REFER TO RCP	
334B	ART WORKROOM W/ STORAGE	VCT	RB	P	P	P	P	EXP	REFER TO RCP	
335	ACADEMIC TEAM ROOM	ET	RB	P	P	P	P	EXP / P	REFER TO RCP	
336	LANGUAGE CLASSROOM	VCT	RB	P	P	P	P	ACT-1	REFER TO RCP	
337	SMALL GROUP ROOM/READING	VCT	RB	P	P	P	P	ACT-1	REFER TO RCP	
338	SMALL INCLUSION ROOM	ET	PT	WD	WD	WD	WD	ACT-13	REFER TO RCP	
339A	SCIENCE CLASSROOM 7/8 GRADES	VCT	RB	P	P	P	P	ACT-1	REFER TO RCP	
339B	PREP ROOM	VCT	RB	P	P	P	P	ACT-1	REFER TO RCP	
340	GENERAL CLASSROOM	VCT	RB	P	P	P	P	ACT-1	REFER TO RCP	
341	GENERAL CLASSROOM	VCT	RB	P	P	P	P	ACT-1	REFER TO RCP	
342	SMALL GROUP SEMINAR	VCT	RB	P	P	P	P	ACT-1	REFER TO RCP	
343	SMALL INCLUSION ROOM	ET	PT	WD	WD	WD	WD	ACT-13	REFER TO RCP	
344	GENERAL CLASSROOM	VCT	RB	P	P	P	P	ACT-1	REFER TO RCP	
345A	KITCHEN	QT	CT	CT	CT	CT	CT	EP / ACT-3	REFER TO RCP	
345B	KITCHEN OFFICE	QT	CT	CT	CT	CT	CT	ACT-4	REFER TO RCP	
345C	MOP CLOSET	QT	CT	CT	CT	CT	CT	EP / ACT-3	REFER TO RCP	
346	ELEC	CONC, PAINTED	RB	P	P	P	P	EXP	REFER TO RCP	
347	CHAIR/TABLE EQUIP STORAGE	CONC, PAINTED	RB	P	P	P	P	EXP	REFER TO RCP	

ROOM FINISH SCHEDULE
LOWER FLOOR

ROOM #	ROOM NAME	FLOOR MATERIAL	BASE MATERIAL	WALL MATERIAL N	E	S	W	CEILING MATERIAL	HEIGHT	NOTES
L01	CONCESSIONS	VCT	RB	P	P	P	P	ACT-2	REFER TO RCP	
L02	ELEV NO. 3 EQUIP	CONC, PAINTED	RB	P	P	P	P	P	REFER TO RCP	
L03	OT-PT	VCT	RB	P	P	P	P	ACT-1	REFER TO RCP	
L04	HEALTH CLASSROOM	R	RB	P	P	P	P	ACT-1 / P	REFER TO RCP	
L05	GIRLS LOCKER ROOM	VCT	RB	EP	EP	EP	EP	ACT-5	REFER TO RCP	
L06	PHYS. ED. OFFICE	VCT	RB	P	P	P	P	ACT-1	REFER TO RCP	
L07	CUSTODIAL	CONC, PAINTED	RB	P	P	P	P	EXP	REFER TO RCP	
L08	IDF

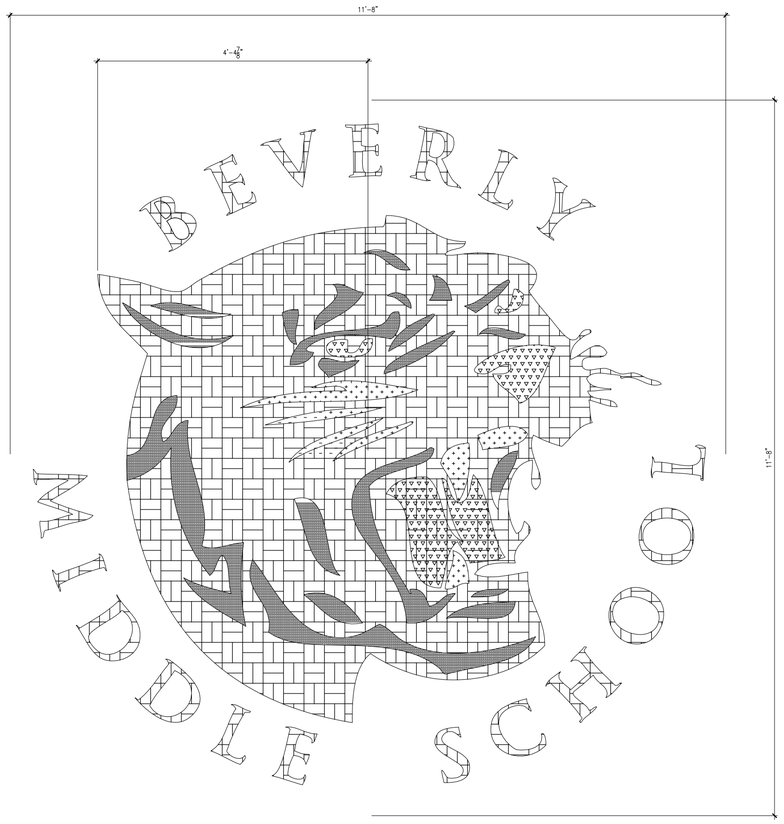

7 GYMNASIUM COURT SCHOOL LOGO
1" = 1'-0"

ALL TILES AT RESTROOM PERIMETER WILL HAVE TO BE CUT TO CENTER PATTERN WITHIN ROOM. SEE FLOOR PLANS FOR EXACT SIZE AND CONNFIGURATION OF ROOM.

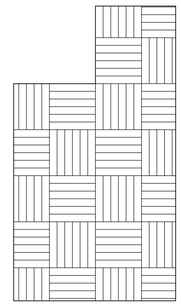

6 SAMPLE CERAMIC MOSAIC FLOOR TILE - RESTROOM
1/4" = 1'-0"

ALL TILES AT PERIMETER WILL HAVE TO BE CUT TO CENTER PATTERN WITHIN ROOM. SEE FLOOR PLANS FOR EXACT SIZE AND CONNFIGURATION OF ROOM.

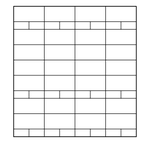

5 SAMPLE CERAMIC WALL TILE - RESTROOM
1/4" = 1'-0"

ALL TILES AT PERIMETER WILL HAVE TO BE CUT TO CENTER PATTERN WITHIN ROOM. SEE FLOOR PLANS FOR EXACT SIZE AND CONNFIGURATION OF ROOM.

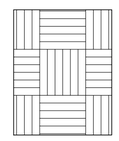

4 SAMPLE CERAMIC MOSAIC FLOOR TILE - SINGLE RESTROOM
1/4" = 1'-0"

ALL TILES AT PERIMETER WILL HAVE TO BE CUT TO CENTER PATTERN WITHIN ROOM. SEE FLOOR PLANS FOR EXACT SIZE AND CONNFIGURATION OF ROOM.

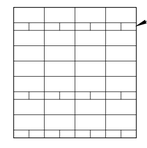

3 SAMPLE CERAMIC WALL TILE - SINGLE RESTROOM
1/4" = 1'-0"

ALL TILES AT PERIMETER WILL HAVE TO BE CUT TO CENTER PATTERN WITHIN ROOM. SEE FLOOR PLANS FOR EXACT SIZE AND CONNFIGURATION OF ROOM.

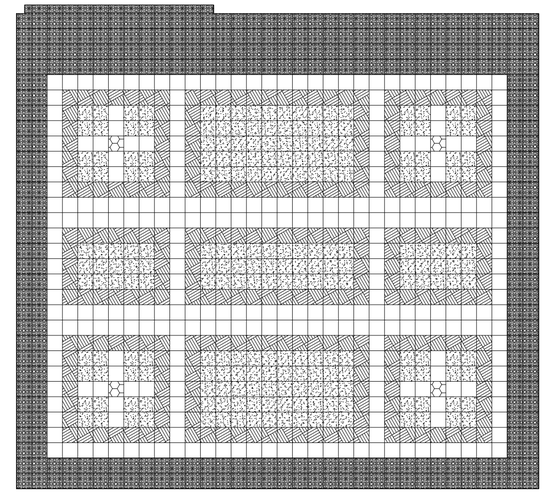

2 VINYL COMPOSITE TILE - SCIENCE CLASSROOM
1/4" = 1'-0"

ALL TILES AT PERIMETER WILL HAVE TO BE CUT TO CENTER PATTERN WITHIN ROOM. SEE FLOOR PLANS FOR EXACT SIZE AND CONNFIGURATION OF ROOM.

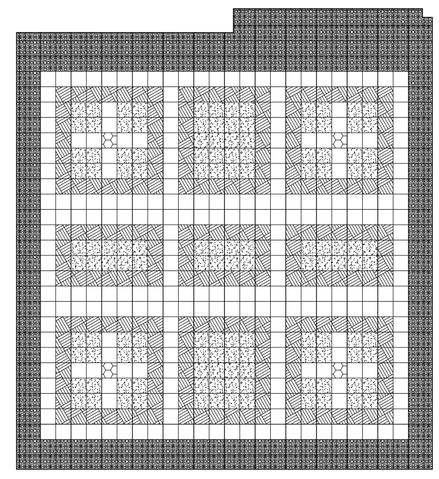

1 VINYL COMPOSITE TILE - CLASSROOM
1/4" = 1'-0"

A13 architects
526 Boston Post Rd Wayland, MA
508.358.0790 www.a13architects.com

Copyright © 2016 A13 Architects, LLC

BEVERLY MIDDLE SCHOOL

CABOT STREET
BEVERLY, MA 01915

VCT FLOOR TILE PATTERN LEGEND
VCT-1 VCT-3 VCT-5
VCT-2 VCT-4

CARPET TILE PATTERN LEGEND
CPT-1 CPT-3
CPT-2

CERAMIC MOSAIC TILE PATTERN LEGEND
CMT-1 CMT-3 CMT-5
CMT-2 CMT-4 CMT-6

CERAMIC WALL TILE PATTERN LEGEND
CT-1

CERAMIC MOSAIC TILE PATTERN LEGEND
CMT-1

QUARRY TILE PATTERN LEGEND
QT-1
6"x6" NOM.

EPOXY TERRAZZO FLOORING PATTERN LEGEND
ET-1 ET-3 ET-5
ET-2 ET-4 ET-6

STENCIL LETTERING - PAINTED
P-1 P-3
P-2 P-4

GENERAL NOTES:
1. SAMPLE FLOOR PATTERNS ON THIS DRAWING ARE PROVIDED TO DEMONSTRATE THE VARIETY OF COLORS TYPICAL PATTERNING THAT WILL BE REQUIRED AS PART OF THE PROJECT. FINAL COLOR SELECTIONS AND PATTERNS WILL BE ISSUED AFTER RECEIPT AND APPROVAL OF SHOP DRAWINGS AND PRODUCT LITERATURE FROM THE INSTALLING CONTRACTOR.

90% CONSTRUCTION DOCUMENTS

NOT FOR CONSTRUCTION

NORTH ARROW

KEYPLAN

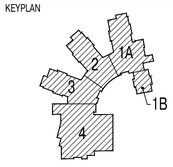

DRAWING NAME:
SAMPLE WALL AND FLOOR PATTERNS

DRAWN BY: ETF
REVIEWED BY: BPH
SCALE: As Noted
JOB NO.: 1403.00
DATE: July 25, 2016
DRAWING NUMBER: A7.02

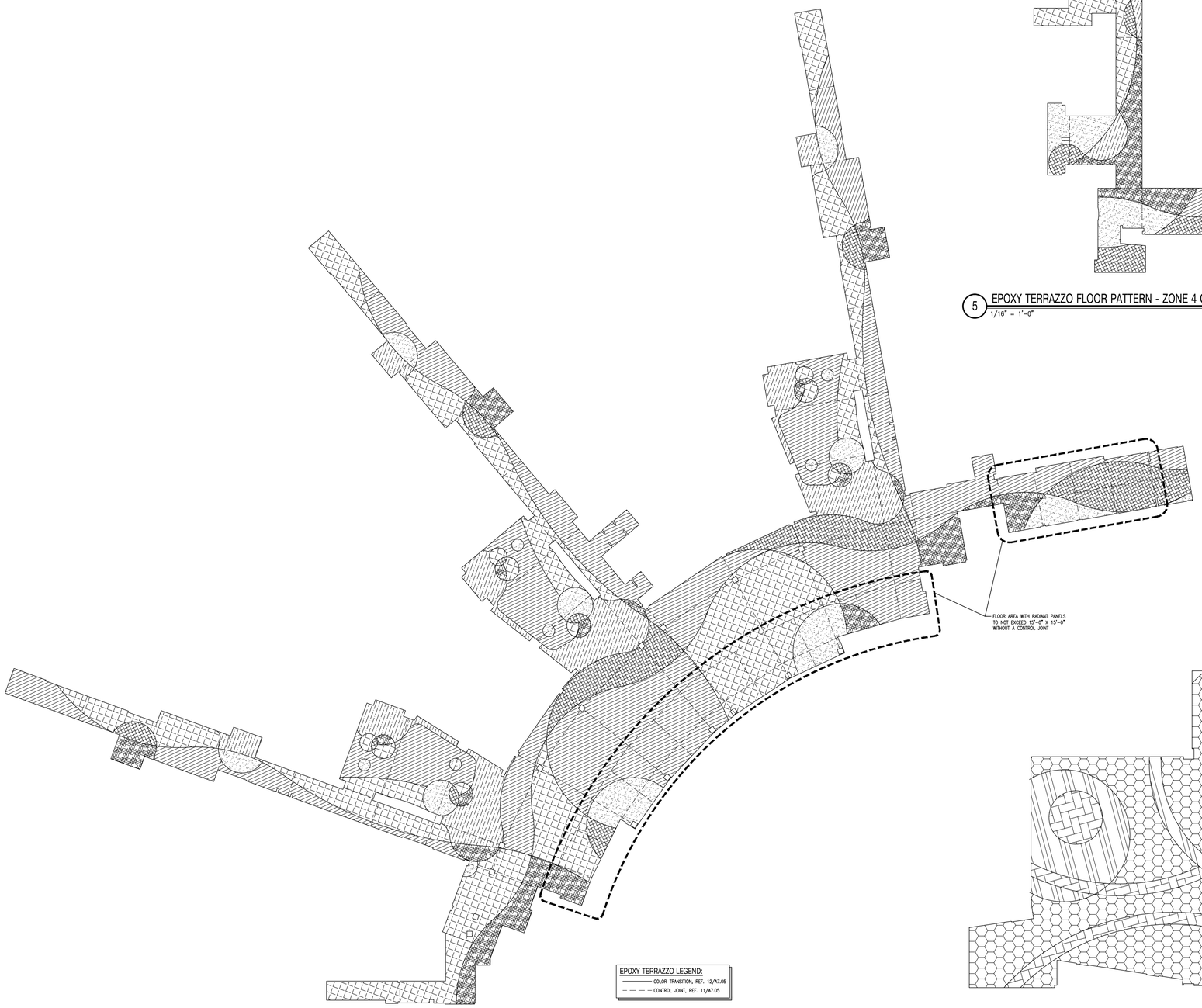

2 EPOXY TERRAZZO FLOOR PATTERN - CORRIDORS, DINING, MAIN LOBBY
1/16" = 1'-0" FLOORS 1, 2 (SIM), 3, 4 (SIM)

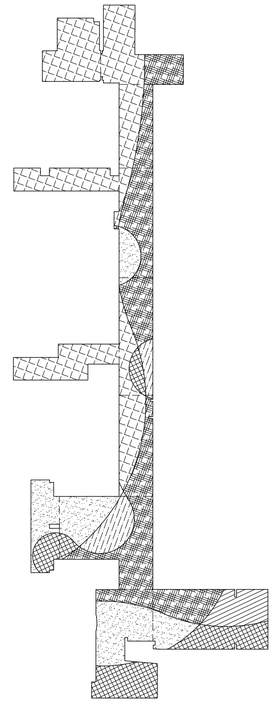

5 EPOXY TERRAZZO FLOOR PATTERN - ZONE 4 CORRIDOR
1/16" = 1'-0" FLOOR 0

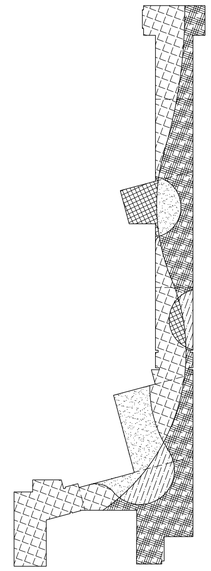

4 EPOXY TERRAZZO FLOOR PATTERN - ZONE 4 CORRIDOR
1/16" = 1'-0" FLOOR 1

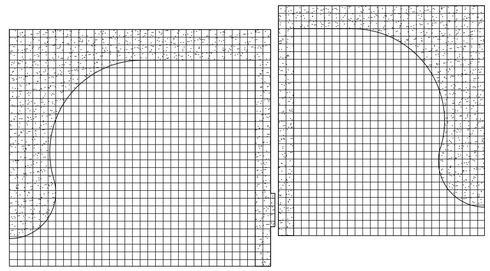

3 SAMPLE VCT FLOOR PATTERN - TYPICAL CLASSROOM
1/8" = 1'-0"

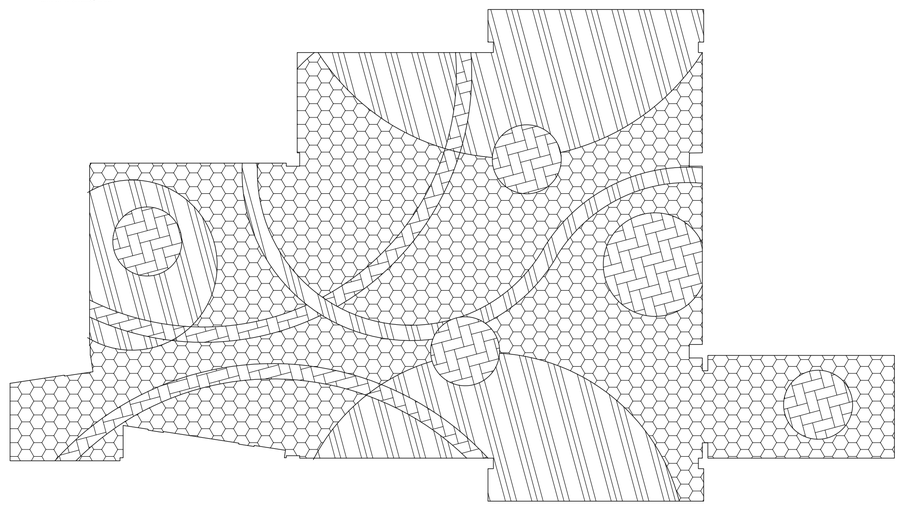

1 CARPET FLOOR PATTERN - MEDIA CENTER
1/8" = 1'-0"

architects
526 Boston Post Rd Wayland, MA
508.358.0790 www.ai3architects.com

Copyright © 2016 Ai3 Architects, LLC

BEVERLY MIDDLE SCHOOL

CABOT STREET
BEVERLY, MA 01915

VCT FLOOR TILE PATTERN LEGEND

VCT-1 VCT-3 VCT-5
VCT-2 VCT-4

CARPET TILE PATTERN LEGEND

CPT-1 CPT-3
CPT-2

CERAMIC MOSAIC TILE PATTERN LEGEND

CMT-1 CMT-3 CMT-5
CMT-2 CMT-4 CMT-6

CERAMIC WALL TILE PATTERN LEGEND

CT-1

CERAMIC MOSAIC TILE PATTERN LEGEND

CMT-1

QUARRY TILE PATTERN LEGEND

QT-1
6"X6" NOM.

EPOXY TERRAZZO FLOORING PATTERN LEGEND

ET-1 ET-3 ET-5
ET-2 ET-4 ET-6

STENCIL LETTERING - PAINTED

P-1 P-3
P-2 P-4

GENERAL NOTES:

1. SAMPLE FLOOR PATTERNS ON THIS DRAWING ARE PROVIDED TO DEMONSTRATE THE VARIETY OF COLORS TYPICAL PATTERNING THAT WILL BE REQUIRED AS PART OF THE PROJECT. FINAL COLOR SELECTIONS AND PATTERNS WILL BE ISSUED AFTER RECEIPT AND APPROVAL OF SHOP DRAWINGS AND PRODUCT LITERATURE FROM THE INSTALLING CONTRACTOR.

90% CONSTRUCTION DOCUMENTS

NOT FOR CONSTRUCTION

NORTH ARROW

KEYPLAN

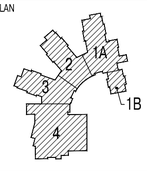

DRAWING NAME:

SAMPLE WALL AND FLOOR PATTERNS

DRAWN BY: ETF / JMR
REVIEWED BY: BPH
SCALE: As Noted
JOB NO.: 1403.00
DATE: July 25, 2016
DRAWING NUMBER: A7.03

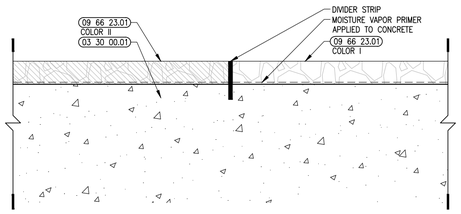

12 EPOXY TERAZZO COLOR TRANSITION
1"-0" = 1'-0"

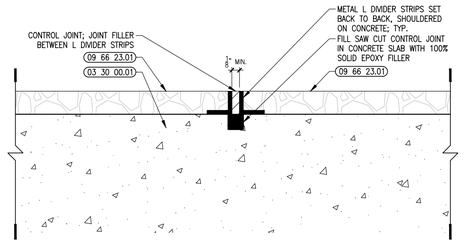

11 EPOXY TERRAZO CONTROL JOINT
1"-0" = 1'-0"

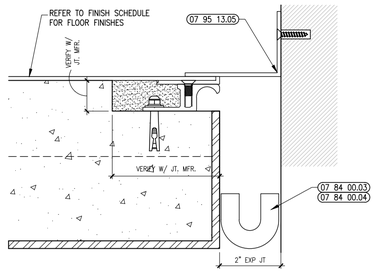

10 EXPANSION JOINT - FLOOR TO WALL
6" = 1'-0"

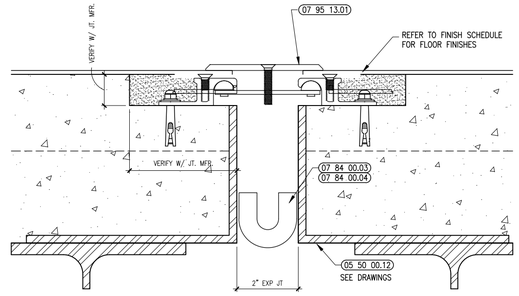

9 EXPANSION JOINT - FLOOR TO FLOOR
6" = 1'-0"

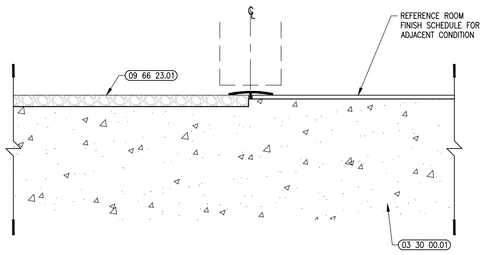

8 VCT TO EPOXY TERAZZO
6" = 1'-0"

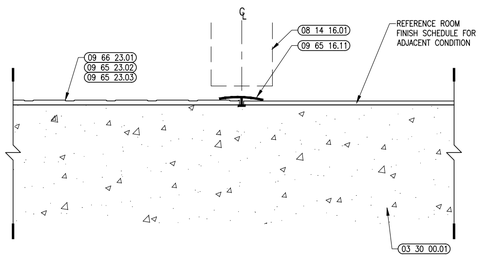

7 RUBBER FLOOR TRANSITION
6" = 1'-0"

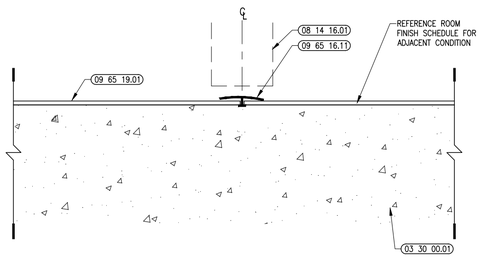

6 VCT TO EPOXY TERAZZO
6" = 1'-0"

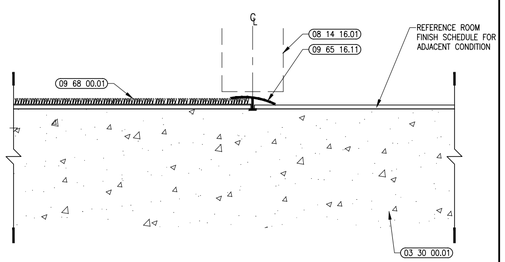

5 CARPET TILE FLOORING TRANSITION
6" = 1'-0"

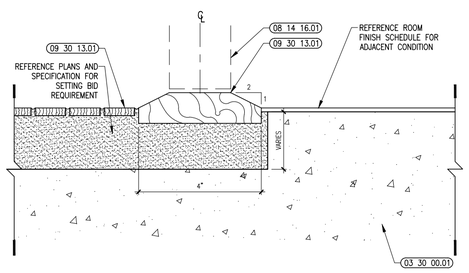

4 CERAMIC TILE FLOORING TRANSITION
6" = 1'-0"

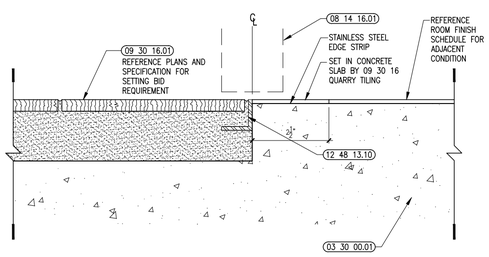

3 QUARRY TILE FLOORING TRANSITION
6" = 1'-0"

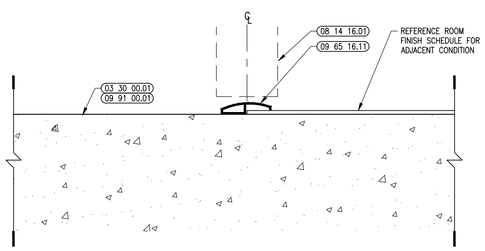

2 CONCRETE FLOORING TRANSITION
6" = 1'-0"

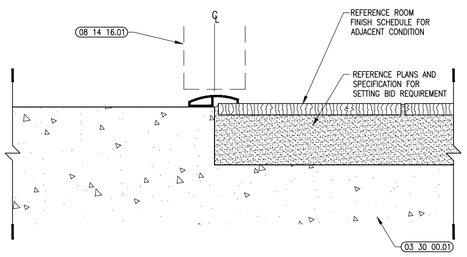

1 CONCRETE FLOORING TRANSITION TO TILE
6" = 1'-0"

A13 architects
526 Boston Post Rd Wayland, MA
508.358.0790 www.a13architects.com

BEVERLY MIDDLE SCHOOL

CABOT STREET
BEVERLY, MA 01915

Copyright © 2016 A13 Architects, LLC

KEYNOTE LEGEND: (REFERENCE SHEETS A0.01 & A0.02 FOR MASTER KEYNOTE LIST AND KEYNOTES NOT LISTED)

03 30 00.01	RESINOUS MATRIX TERRAZZO FLOORING
05 50 00.12	STEEL ANGLE – SEE STRUCTURAL
07 84 00.03	FIRESTOP MORTAR
07 84 00.04	FIRESTOP PILLOWS
07 95 13.01	EXPANSION JOINT COVER – 2 INCH – INTERIOR – FLOOR / FLOOR
07 95 13.05	EXPANSION JOINT COVER – 2 INCH – INTERIOR – FLOOR / WALL
08 14 16.01	SOLID CORE FLUSH WOOD DOOR– SEE DOOR SCHEDULE
09 30 13.01	CERAMIC FLOOR TILE
09 30 16.01	QUARRY TILE
09 65 16.11	TRANSITION STRIP
09 65 19.01	VINYL COMPOSITION TILE
09 65 23.02	RUBBER FLOOR TILE – HAMMERED PROFILE
09 65 23.03	RUBBER FLOOR TILE – ATHLETIC
09 66 23.01	RESINOUS MATRIX TERRAZZO FLOORING
09 68 00.01	CARPET
09 91 00.01	PAINT – SEE SCHEDULE
12 48 13.10	EXTRUDED ALUMINUM RECESSED FRAMING – L SHAPE

90% CONSTRUCTION DOCUMENTS

NOT FOR CONSTRUCTION

NORTH ARROW

KEYPLAN

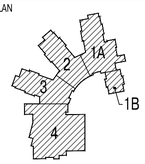

DRAWING NAME:

TRANSITION DETAILS

DRAWN BY:	ETF
REVIEWED BY:	BPH
SCALE:	As Noted
JOB NO.:	1403.00
DATE:	July 25, 2016
DRAWING NUMBER:	A7.04

DOOR SCHEDULE

FIRST FLOOR (CONT.)

		DOOR					FRAME					HDW SET	FIRE RATING	REMARKS
DOOR #	ROOM NAME	DR SIZE	TYPE	MAT'L	THK.	DR FIN	TYPE	MAT'L	HEAD	JAMB	FIN.			
147C	ATTAIN (AUTISM) 5/6 - 7/8 GRADES	4'-0" X 7'-0"	A	HM	1-3/4"	P	F1	HM	9/A6.31	5,6/A6.31	P	51	45 MIN.	PS, SEE NOTES 6,8
147D	ATTAIN (AUTISM) 5/6 - 7/8 GRADES	PR. 3'-0" X 7'-0"	AA	SCW	1-3/4"	CLR	F2	HM	3/A7.13	3, 14/A7.13 SIM		25	NONE	
149A	NETWORK/TELECOM ROOM	3'-0" X 7'-0"	A	SCW	1-3/4"	CLR	F1	HM	1/A7.13	1/A7.13		61	NONE	SEE NOTES 6,7
149B	ELEC	3'-0" X 7'-0"	A	SCW	1-3/4"	CLR	F1	HM	9/A7.13	9/A7.13		15	NONE	
149C	EMER ELEC	3'-0" X 7'-0"	A	SCW	1-3/4"	CLR	F1	HM	1/A7.13	1/A7.13				
150	CUSTODIAL	4'-0" X 7'-0"	A	SCW	1-3/4"	CLR	F1	HM	3/A7.13	3/A7.13		15	NONE	
151A	AUDITORIUM VESTIBULE	PR. 3'-0" X 7'-0"	AA	SCW	1-3/4"	CLR	F2	HM	10/A7.13 SIM	11/A7.13 SIM		58	NONE	SEE NOTES 6,7
151B	AUDITORIUM	PR. 3'-0" X 7'-0"	AA	SCW	1-3/4"	CLR	F2	HM	6/A7.13 SIM	7/A7.13 SIM		12	NONE	
151C	AUDITORIUM	PR. 3'-0" X 7'-0"	AA	HM	1-3/4"	CLR	F2	HM	6/A7.13 SIM	8/A7.13 SIM		58	NONE	SEE NOTES 6,7,9
151D	STAGE	PR. 3'-0" X 7'-0"	AA	SCW	1-3/4"	CLR	F2	HM	6/A7.13 SIM	8/A7.13 SIM		57	NONE	SEE NOTES 6,7
151F	AUDITORIUM	4'-0" X 7'-0"	A	HM	1-3/4"	P	F1	HM	9/A6.31 SIM	6/A6.31 SIM		66	NONE	SEE NOTES 6,7
152A	BAND/CHORUS	PR. 3'-0" X 7'-0"	AA	SCW	1-3/4"	CLR	F2	HM	6/A7.13 SIM	8/A7.13 SIM		57	NONE	SEE NOTES 6,7
152C	MUSIC PRACTICE/ENSEMBLE	3'-0" X 7'-0"	E	SCW	1-3/4"	CLR	F1	HM	1/A7.13	2/A7.13		38	NONE	
152D	MUSIC PRACTICE/ENSEMBLE	3'-0" X 7'-0"	E	SCW	1-3/4"	CLR	F1	HM	1/A7.13	2/A7.13		38	NONE	
152E	BAND/CHORUS STORAGE	PR. 3'-0" X 7'-0"	AA	SCW	1-3/4"	CLR	F2	HM	6/A7.13 SIM	7/A7.13 SIM		62	NONE	SEE NOTES 6,7
152F	MUSIC OFFICE	3'-0" X 7'-0"	C	SCW	1-3/4"	CLR	F1	HM	1/A7.13	2/A7.13		35	NONE	
154A	MIDI LAB	3'-0" X 7'-0"	C	SCW	1-3/4"	CLR	F4	HM	1/A7.13	2/A7.13		34	NONE	
154B	MUSIC STORAGE	3'-0" X 7'-0"	A	SCW	1-3/4"	CLR	F1	HM	9/A7.13	9/A7.13		19	NONE	
155A	SET DESIGN & CONST APPS LAB	3'-0" X 7'-0"	C	SCW	1-3/4"	CLR	F6	HM	6/A7.13 SIM	8/A7.13 SIM		34	NONE	
155B	SET DESIGN & CONST APPS LAB	PR. 3'-0" X 7'-0"	AA	SCW	1-3/4"	CLR	F2	HM	6/A7.13 SIM	7/A7.13 SIM		22	NONE	
155C	SET DESIGN & CONST APPS LAB	3'-0" X 7'-9 1/2"	A	HM	1-3/4"	P	F1	TBHM	9/A6.31	6/A6.31	P	73		SEE NOTES 6,7,9
C100A	MAIN LOBBY VESTIBULE	PR. 3'-0" X 7'-0"	FF	ALG	MFR	PVDF	CW1	AL			PVDF	50	NONE	PS, SEE NOTES 6,8,9,14
C100B	MAIN LOBBY VESTIBULE	PR. 3'-0" X 7'-0"	FF	ALG	MFR	PVDF	CW1	AL			PVDF	49	NONE	PS, SEE NOTES 6,7,9
C100C	MAIN LOBBY	PR. 3'-0" X 7'-0"	FF	ALG	MFR	PVDF	ICW1	AL			PVDF	53	NONE	PS, SEE NOTES 6,8,14
C100D	MAIN LOBBY	PR. 3'-0" X 7'-0"	FF	ALG	MFR	PVDF	ICW1	AL			PVDF	55	NONE	PS, SEE NOTES 6,7
C101A	CORRIDOR	PR. 3'-0" X 7'-3 1/2"	EE	HM	1-3/4"	P	F2	TBHM	9/A6.31	5,6/A6.31	P	52	NONE	PS, SEE NOTES 6,8,9
C101B	CORRIDOR	3'-0" X 7'-0"	A	SCW	1-3/4"	CLR	F1	HM	6/A7.13 SIM	7/A7.13 SIM		59	NONE	SEE NOTES 6,7
C101C	CORRIDOR	3'-0" X 7'-0"	E	SCW	1-3/4"	CLR	F1	HM	6/A7.13 SIM	7/A7.13 SIM		60	NONE	SEE NOTES 6,7
C104A	CORRIDOR	PR. 3'-0" X 7'-0"	AA	SCW	1-3/4"	CLR	F2	HM	3/A7.13	3/A7.13		07	NONE	
C105	CORRIDOR	4'-0" X 7'-0"	AA	SCW	1-3/4"	CLR	F2	HM	4/A7.13	5/A7.13		06	NONE	
C106A	CORRIDOR	PR. 4'-0" X 7'-0"	AA	SCW	1-3/4"	CLR	F2	HM	4/A7.13	5/A7.13 SIM		06	NONE	
C106B	CORRIDOR	3'-0" X 7'-0"	E	SCW	1-3/4"	CLR	F1	HM	12/A7.13	13/A7.13		10	NONE	
T1-1	TOILET	3'-0" X 7'-0"	A	SCW	1-3/4"	CLR	F1	HM	1/A7.13	1/A7.13		13	NONE	
T1-2B	TOILET	3'-0" X 7'-0"	A	SCW	1-3/4"	CLR	F1	HM	1/A7.13	1/A7.13		14	NONE	
T1-3B	TOILET	3'-0" X 7'-0"	A	SCW	1-3/4"	CLR	F1	HM	1/A7.13	2/A7.13		14	NONE	
T1-4A	TOILET	3'-0" X 7'-0"	A	SCW	1-3/4"	CLR	F1	HM	9/A7.13	11, 8/A7.13 SIM		14	NONE	
T1-4B	TOILET	3'-0" X 7'-0"	A	SCW	1-3/4"	CLR	F1	HM	9/A7.13	11, 15/A7.13 SIM		14	NONE	
T1-5B	TOILET	3'-0" X 7'-0"	A	SCW	1-3/4"	CLR	F1	HM	1/A7.13	2/A7.13		14	NONE	
T1-6B	TOILET	3'-0" X 7'-0"	A	SCW	1-3/4"	CLR	F1	HM	1/A7.13	2/A7.13		14	NONE	
T1-7	TOILET	3'-0" X 7'-0"	A	SCW	1-3/4"	CLR	F1	HM	9/A7.13	9/A7.13		13	NONE	
T1-8	TOILET	3'-0" X 7'-0"	A	SCW	1-3/4"	CLR	F1	HM	1/A7.13	1/A7.13		13	NONE	
T1-9	TOILET	3'-0" X 7'-0"	A	SCW	1-3/4"	CLR	F1	HM	1/A7.13	1, 14/A7.13 SIM		13	NONE	
ST2-1A	STAIR 2	PR. 3'-0" X 7'-0"	EE	SCW	1-3/4"	CLR	F2	HM	6/A7.13 SIM	8/A7.13 SIM		44	90 MIN.	
ST2-1B	STAIR 2	PR. 3'-0" X 7'-0"	EE	SCW	1-3/4"	CLR	F2	HM	6/A7.13 SIM	7/A7.13 SIM		46	90 MIN.	
ST3-1A	STAIR 3	PR. 3'-0" X 7'-0"	EE	SCW	1-3/4"	CLR	F2	HM	6/A7.13 SIM	8/A7.13 SIM		44	90 MIN.	
ST3-1B	STAIR 3	PR. 3'-0" X 7'-0"	FF	ALG	MFR	PVDF	CW2	AL			PVDF	52	NONE	PS, SEE NOTES 6,8,9
ST4-1A	STAIR 4	PR. 3'-0" X 7'-0"	EE	SCW	1-3/4"	CLR	F2	HM	6/A7.13 SIM	8/A7.13 SIM		44	90 MIN.	
ST4-1B	STAIR 4	PR. 3'-0" X 7'-0"	FF	ALG	MFR	PVDF	CW2	AL			PVDF	52	NONE	PS, SEE NOTES 6,8,9
ST5-1A	STAIR 5	PR. 3'-0" X 7'-0"	EE	SCW	1-3/4"	CLR	F2	HM	6/A7.13 SIM	8/A7.13 SIM		44	90 MIN.	
ST5-1B	STAIR 5	PR. 3'-0" X 7'-0"	FF	ALG	MFR	PVDF	CW2	AL			PVDF	52	NONE	PS, SEE NOTES 6,8,9
ST6-1A	STAIR 6	PR. 3'-0" X 7'-0"	EE	SCW	1-3/4"	CLR	F2	HM	6/A7.13 SIM	8/A7.13 SIM		44	90 MIN.	
ST6-1B	STAIR 6	PR. 3'-0" X 7'-0"	EE	SCW	1-3/4"	CLR	F2	HM	10/A7.13	10/A7.13		45	90 MIN.	SEE NOTES 6,7
ST6-1C	STAIR 6	PR. 3'-0" X 7'-0"	FF	ALG	MFR	PVDF	SF5	ALG			PVDF	66	NONE	SEE NOTES 6,7,9
ST8-1A	STAIR 8	PR. 3'-0" X 7'-0"	EE	SCW	1-3/4"	CLR	F2	HM	12/A7.13	13/A7.13		45	90 MIN.	SEE NOTES 6,7
ST8-1B	STAIR 8	3'-0" X 7'-0"	F	ALG	MFR	PVDF	F6	AL	6/A6.11	6,7/A6.11	PVDF	51	NONE	SEE NOTES 6,7,9

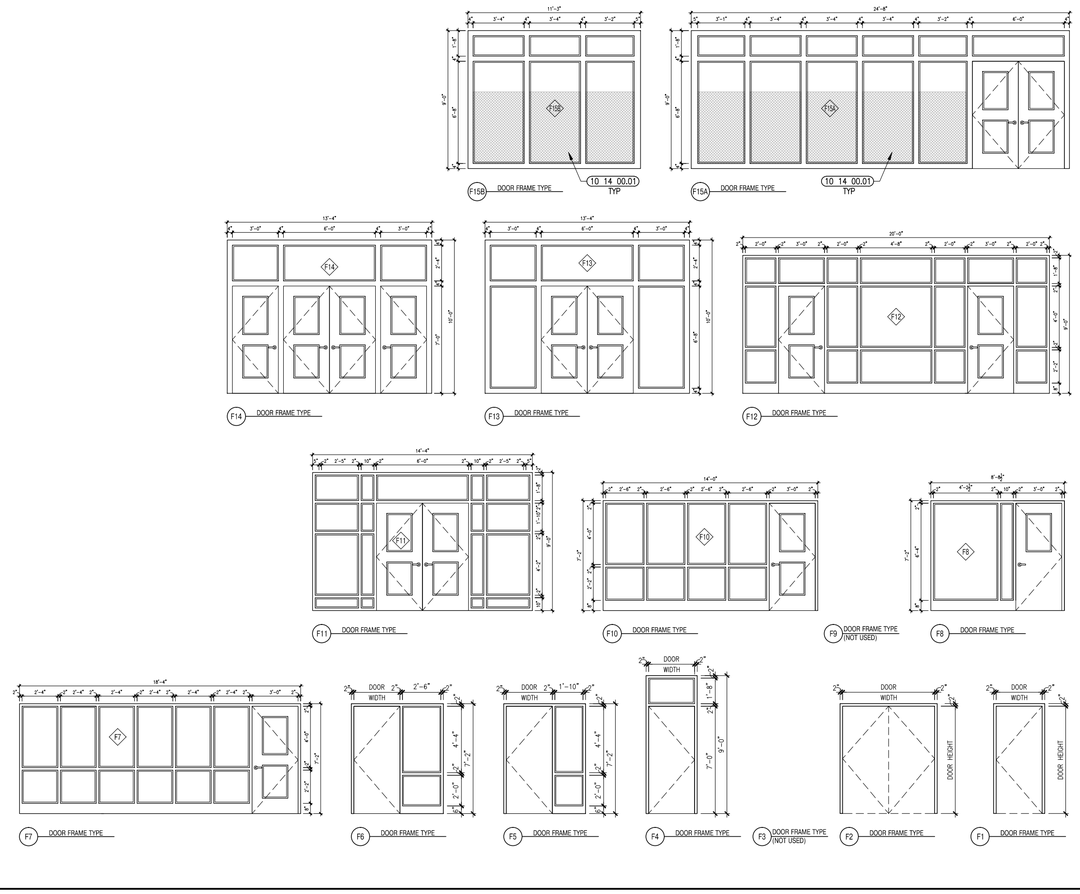

DOOR SCHEDULE

LOWER LEVEL

		DOOR					FRAME					HDW SET	FIRE RATING	REMARKS
DOOR #	ROOM NAME	DR SIZE	TYPE	MAT'L	THK.	DR FIN	TYPE	MAT'L	HEAD	JAMB	FIN.			
L01	CONCESSIONS	3'-0" X 7'-0"	C	SCW	1-3/4"	CLR	F1	HM	6/A7.13	1, 7/A7.13		19	NONE	
L01B	CONCESSIONS	6'-0" X 4'-2"	OHG	MFR			MFR							
L02	ELEV NO. 3 EQUIP	3'-6" X 7'-0"	A	SCW	1-3/4"	CLR	F1	HM	1/A7.13	2/A7.13		19	45 MIN.	
L03	OP/PT	3'-0" X 7'-0"	C	SCW	1-3/4"	CLR	F4	HM	6/A7.13	11, 15/A7.13		34	NONE	
L04A	HEALTH CLASSROOM	3'-0" X 7'-0"	D	SCW	1-3/4"	CLR	F4	HM	6/A7.13	8, 11/A7.13		34	NONE	
L04B	HEALTH CLASSROOM	PR. 3'-0" X 7'-0"	DD	SCW	1-3/4"	CLR	F15	HM	10/A7.13	11/A7.13		36	NONE	
L05	GIRLS LOCKER ROOM	3'-0" X 7'-0"	C	SCW	1-3/4"	CLR	F1	HM	1/A7.13	2/A7.13		09	NONE	
L06A	PHYS. ED. OFFICE	3'-0" X 7'-0"	E	SCW	1-3/4"	CLR	F1	HM	1/A7.13	2/A7.13		37	NONE	
L06B	PHYS. ED. OFFICE	3'-0" X 7'-0"	C	SCW	1-3/4"	CLR	F5	HM	4/A7.13	4/A7.13		11	NONE	
L07	CUSTODIAL	3'-0" X 7'-0"	A	SCW	1-3/4"	CLR	F1	HM	9/A7.13	11/A7.13		15	NONE	
L08	IDF	3'-0" X 7'-0"	A	SCW	1-3/4"	CLR	F1	HM	9/A7.13	11/A7.13		19	NONE	
L09	GYM STOREROOM	PR. 2'-0" & 3'-0" X 7'-0"	AA	SCW	1-3/4"	CLR	F2	HM	10/A7.13	11/A7.13		22	NONE	
L10A	PHYS. ED. OFFICE	3'-0" X 7'-0"	E	SCW	1-3/4"	CLR	F1	HM	1/A7.13	2/A7.13		37	NONE	
L10B	PHYS. ED. OFFICE	3'-0" X 7'-0"	C	SCW	1-3/4"	CLR	F5	HM	4/A7.13	4/A7.13		11	NONE	
L11	BOYS LOCKER ROOM	3'-0" X 7'-0"	C	SCW	1-3/4"	CLR	F1	HM	1/A7.13	2/A7.13		09	NONE	
L12A	MAIN ELEC	PR. 3'-0" X 7'-0"	AA	SCW	1-3/4"	CLR	F2	HM	10/A7.13	11/A7.13		04	45 MIN.	
L12B	EMER ELEC	3'-0" X 7'-0"	A	SCW	1-3/4"	CLR	F1	HM	1/A7.13	1/A7.13				
L13A	MECH ROOM	PR. 3'-0" X 7'-0"	AA	SCW	1-3/4"	CLR	F2	HM	12/A7.13	13/A7.13		21	NONE	
L13B	MECH ROOM	PR. 3'-0" X 7'-10"	AA	HM	1-3/4"	P	F2	TBHM	9/A6.31	6/A6.31	P	62	NONE	SEE NOTES 6,7,9
L15A	GYMNASIUM	3'-0" X 7'-0"	D	SCW	1-3/4"	CLR	F14	HM	6/A7.13 SIM	8/A7.13 SIM		05	NONE	
L15B	GYMNASIUM	PR. 3'-0" X 7'-0"	DD	SCW	1-3/4"	CLR	F14	HM	6/A7.13 SIM	-		03	NONE	
L15C	GYMNASIUM	3'-0" X 7'-0"	D	SCW	1-3/4"	CLR	F14	HM	6/A7.13 SIM	8/A7.13 SIM		05	NONE	
L15D	GYMNASIUM	PR. 3'-0" X 7'-0"	DD	SCW	1-3/4"	CLR	F13	HM	6/A7.13 SIM	8/A7.13 SIM		03	NONE	
L15E	GYMNASIUM	PR. 3'-0" X 7'-0"	DD	SCW	1-3/4"	CLR	F13	HM	6/A7.13 SIM	8/A7.13 SIM		03	NONE	
L15F	GYMNASIUM	PR. 3'-0" X 7'-0"	FF	ALG	MFR	PVDF	SF2	AL	5/A6.11 SIM	6/A6.11 SIM	PVDF	56	NONE	SEE NOTES 6,7,9
L15G	GYMNASIUM	PR. 3'-0" X 7'-0"	FF	ALG	MFR	PVDF	SF2	AL	5/A6.11 SIM	6/A6.11 SIM	PVDF	56	NONE	SEE NOTES 6,7,9
L15H	GYMNASIUM	PR. 3'-0" X 7'-0"	DD	SCW	1-3/4"	CLR	F13	HM	6/A7.13 SIM	8/A7.13 SIM		03	NONE	
L16	SOUND CLOSET	3'-0" X 7'-0"	A	SCW	1-3/4"	CLR	F1	HM	9/A7.13	11/A7.13		19	NONE	
CL01A	LOWER LOBBY VESTIBULE	PR. 3'-0" X 7'-0"	FF	ALG	MFR	PVDF	CW6	AL			PVDF	49	NONE	PS, SEE NOTES 6,7,9
CL01B	LOWER LOBBY VESTIBULE	PR. 3'-0" X 7'-0"	FF	ALG	MFR	PVDF	CW6	AL			PVDF	50	NONE	PS, SEE NOTES 6,8,9,14
CL02A	LOWER LOBBA	PR. 3'-0" X 7'-0"	FF	ALG	MFR	PVDF	ICW3	AL			PVDF	01	NONE	
CL02B	LOWER LOBBY	PR. 3'-0" X 7'-0"	FF	ALG	MFR	PVDF	ICW3	AL			PVDF	02	NONE	PS1, SEE NOTE 14
CL05	CORRIDOR	PR. 3'-0" X 7'-0"	AA	SCW	1-3/4"	CLR	F2	HM	12/A7.13	13/A7.13		12	NONE	
TL-1B	TOILET	2'-8" X 7'-0"	A	SCW	1-3/4"	CLR	F1	HM	1/A7.13	2/A7.13		14	NONE	
TL-2B	TOILET	2'-8" X 7'-0"	A	SCW	1-3/4"	CLR	F1	HM	1/A7.13	2/A7.13		14	NONE	
TL-4	TOILET	3'-0" X 7'-0"	A	SCW	1-3/4"	CLR	F1	HM	1/A7.13	1/A7.13		13	NONE	
TL-6	TOILET	3'-0" X 7'-0"	A	SCW	1-3/4"	CLR	F1	HM	1/A7.13	1, 7/A7.13		13	NONE	

DOOR SCHEDULE

FIRST FLOOR

		DOOR					FRAME					HDW SET	FIRE RATING	REMARKS
DOOR #	ROOM NAME	DR SIZE	TYPE	MAT'L	THK.	DR FIN	TYPE	MAT'L	HEAD	JAMB	FIN.			
100A	MEDIA CENTER/READING ROOM	PR. 3'-0" X 7'-0"	DD	SCW	1-3/4"	CLR	F11	HM	6/A7.13 SIM	7/A7.13 SIM		67	NONE	SEE NOTES 6,7
100B	MULTIMEDIA MAKERSPACE EDITING	9'-4 3/4" X 8'-8"	B	G	1/2"				4/A7.13	4/A7.13		40	NONE	
100C	LIBRARY/ TECH WORKROOM	3'-0" X 7'-0"	C	SCW	1-3/4"	CLR	F5	HM	4/A7.13	4, 14/A7.13 SIM		29	NONE	
100D	TECH OFFICE	3'-0" X 7'-0"	C	SCW	1-3/4"	CLR	F5	HM	3/A7.13	3/A7.13		28	NONE	
100E	QUIET AREA	3'-6" X 7'-0"	E	SCW	1-3/4"	CLR	F1	HM	6/A7.13	7/A7.13		29	NONE	
100F	QUIET AREA	9'-4 3/4" X 8'-8"	B	G	1/2"				4/A7.13	4/A7.13		40	NONE	
100G	QUIET AREA	3'-6" X 7'-0"	F	ALG	MFR	PVDF	SF4	AL	5/A6.11	6,7/A6.11	PVDF	48	NONE	PS, SEE NOTES 6,8
100H	MEDIA CENTER/READING ROOM	3'-6" X 7'-0"	F	ALG	MFR	PVDF	SF4	AL	5/A6.11	6,7/A6.11	PVDF	51	NONE	SEE NOTES 6,7,9
100I	STORAGE	2'-6" X 7'-0"	A	SCW	1-3/4"	CLR	F1	HM	1/A7.13	1/A7.13		19	NONE	
101A	ADMIN WAITING	3'-0" X 7'-0"	D	SCW	1-3/4"	CLR	F12	HM	4/A7.13	4/A7.13		65	NONE	SEE NOTES 6,7
101B	ADMIN WAITING	3'-0" X 7'-0"	D	SCW	1-3/4"	CLR	F12	HM	4/A7.13	4/A7.13		65	NONE	SEE NOTES 6,7
101C	PRINCIPALS OFFICE W/ CONFERENCE	3'-0" X 7'-0"	C	SCW	1-3/4"	CLR	F5	HM	6/A7.13 SIM	7/A7.13 SIM		29	NONE	
101D1	CONFERENCE ROOM	3'-0" X 7'-0"	C	SCW	1-3/4"	CLR	F5	HM	6/A7.13 SIM	7/A7.13 SIM		27	NONE	
101D2	CONFERENCE ROOM	3'-0" X 7'-0"	C	SCW	1-3/4"	CLR	F5	HM	4/A7.13	4/A7.13		64	NONE	SEE NOTES 6,7
101F	STORAGE	2'-0" X 7'-0"	A	SCW	1-3/4"	CLR	F1	HM	1/A7.13	1/A7.13		19	NONE	
102A	ELEC	3'-0" X 7'-0"	A	SCW	1-3/4"	CLR	F1	HM	1/A7.13	1/A7.13		15	NONE	
103B	EMER ELEC	PR. 3'-0" X 7'-0"	AA	SCW	1-3/4"	CLR	F2	HM	10/A7.13	11/A7.13				
104	OPPORTUNITY ROOM - 5-8 GRADES	3'-0" X 7'-0"	C	SCW	1-3/4"	CLR	F4	HM	6/A7.13	8, 11/A7.13		35	NONE	
104A	OPPORTUNITY ROOM OFFICE	3'-0" X 7'-0"	C	SCW	1-3/4"	CLR	F1	HM	1/A7.13	1/A7.13		28	NONE	
105A	SMALL GROUP SEMINAR	4'-0" X 8'-8"	B	G	1/2"				4/A7.13	4/A7.13		39	NONE	
105B	SMALL GROUP SEMINAR	4'-0" X 8'-8"	B	G	1/2"				4/A7.13	4, 7/A7.13 SIM		39	NONE	
107	GENERAL CLASSROOM	3'-0" X 7'-0"	C	SCW	1-3/4"	CLR	F4	HM	6/A7.13	8, 11/A7.13		34	NONE	
108	GENERAL CLASSROOM	3'-0" X 7'-0"	C	SCW	1-3/4"	CLR	F4	HM	6/A7.13	8, 11/A7.13		34	NONE	
109	LANGUAGE BASED - 5TH GRADE	3'-0" X 7'-0"	C	SCW	1-3/4"	CLR	F1	HM	6/A7.13	8, 11/A7.13		34	NONE	
110	ELL - ENGLISH LANGUAGE LEARNERS	3'-0" X 7'-0"	C	SCW	1-3/4"	CLR	F1	HM	6/A7.13	8, 11/A7.13		35	NONE	
111	SMALL GROUP ROOM/READING	4'-0" X 8'-8"	B	G	1/2"				4/A7.13	4/A7.13		39	NONE	
113A	SCIENCE CLASSROOM 5/6 GRADES	3'-0" X 7'-0"	C	SCW	1-3/4"	CLR	F4	HM	6/A7.13	8, 11/A7.13		34	NONE	
113B	PREP ROOM	3'-0" X 7'-0"	C	SCW	1-3/4"	CLR	F1	HM	9/A7.13 SIM	11/A7.13 SIM		37	NONE	
113C	SCIENCE CLASSROOM 5/6 GRADES	3'-0" X 7'-0"	A	SCW	1-3/4"	CLR	F1	HM	6/A7.13	7, 9/A7.13		24	NONE	
114	GENERAL CLASSROOM	3'-0" X 7'-0"	C	SCW	1-3/4"	CLR	F4	HM	6/A7.13	8, 11/A7.13		34	NONE	
115A	ACADEMIC TEAM ROOM	3'-0" X 9'-0"	B	G	1/2"							41	NONE	
115B	ACADEMIC TEAM ROOM	3'-0" X 9'-0"	B	G	1/2"							41	NONE	
115C	ACADEMIC TEAM ROOM	PR. 3'-0 3/4" X 7'-0"	FF	ALG	MFR	PVDF	SF1	AL	5/A6.11	6,7/A6.11	PVDF	72	NONE	SEE NOTES 6,9
115D	ACADEMIC TEAM ROOM	15'-1" X 6'-6"		MFR										
116A	TECHNOLOGY APPS & PROD LAB	3'-0" X 7'-0"	C	SCW	1-3/4"	CLR	F4	HM	1/A7.13	2/A7.13		34	NONE	
116B	TECHNOLOGY APPS & PROD LAB	3'-0" X 7'-0"	C	SCW	1-3/4"	CLR	F6	HM	6/A7.13	7/A7.13		24	NONE	
116C	TECHNOLOGY APPS & PROD LAB	PR. 3'-0" X 7'-0"	FF	ALG	MFR	PVDF	SF7	AL	5/A6.11	6,7/A6.11	PVDF	72	NONE	SEE NOTES 6,7,9
117A	MEDIA READING AREA	PR. 3'-0" X 7'-0"	FF	ALG	MFR	PVDF	CW7A	AL			PVDF	54	NONE	PS, SEE NOTES 6,7,9
117B	CAFETERIA/DINING 5-6 GRADES	12'-0" X 10'-0"	-	ALG	MFR	PVDF	FG1	AL	3/A6.51	4,5/A6.51	PVDF	43	NONE	SEE NOTE 6
117C	CAFETERIA/DINING 5-6 GRADES	PR. 3'-0" X 7'-0"	FF	ALG	MFR	PVDF	CW5B	AL			PVDF	52	NONE	PS, SEE NOTES 6,8,9
117D	CAFETERIA/DINING 5-6 GRADES	12'-0" X 10'-0"	-	ALG	MFR	PVDF	FG1	AL	3/A6.51	4,5/A6.51	PVDF	42	NONE	SEE NOTE 6
117E	MEDIA READING AREA	PR. 3'-0" X 7'-0"	FF	ALG	MFR	PVDF	CW7A	AL			PVDF	54	NONE	PS, SEE NOTES 6,7,9
117F	CAFETERIA/ DINING 5-6 GRADES	13'-6" X 9'-0"	OH2		MFR									
117G	CAFETERIA/ DINING 5-6 GRADES	13'-6" X 9'-0"	OH2		MFR									
118	ASSISTANT PRINCIPAL AP1	3'-0" X 7'-0"	C	SCW	1-3/4"	CLR	F6	HM	3/A7.13	5, 8/A7.13 SIM		28	NONE	
119	ELEC	3'-0" X 7'-0"	A	SCW	1-3/4"	CLR	F1	HM	1/A7.13	2/A7.13		15	NONE	
119A	SOUND CLOSET	2'-6" X 7'-0"	A	SCW	1-3/4"	CLR	F1	HM	1/A7.13	2/A7.13		19	NONE	
119B	CUSTODIAL	4'-0" X 7'-0"	A	SCW	1-3/4"	CLR	F1	HM	3/A7.13	5, 15/A7.13 SIM		15	NONE	
120	TEACHERS COLLABORATION ROOM	3'-0" X 7'-0"	C	SCW	1-3/4"	CLR	F5	HM	10/A7.13	11/A7.13		37	NONE	
121A	SSP - 5TH GRADE	3'-0" X 7'-0"	C	SCW	1-3/4"	CLR	F4	HM	9/A7.13	11/A7.13		34	NONE	
121B	SSP - OFFICE	3'-0" X 7'-0"	C	SCW	1-3/4"	CLR	F1	HM	1/A7.13	1/A7.13		28	NONE	
122	GENERAL CLASSROOM	3'-0" X 7'-0"	C	SCW	1-3/4"	CLR	F4	HM	6/A7.13	8, 11/A7.13		35	NONE	
123A	SMALL GROUP SEMINAR	4'-0" X 8'-8"	B	G	1/2"				4/A7.13	4/A7.13		39	NONE	
123B	SMALL GROUP SEMINAR	4'-0" X 8'-8"	B	G	1/2"				4/A7.13	4/A7.13		39	NONE	
125	GENERAL CLASSROOM	3'-0" X 7'-0"	C	SCW	1-3/4"	CLR	F4	HM	6/A7.13	8, 11/A7.13		34	NONE	
126	THERAPEUTIC LEARNING 5/6 GRADES	3'-0" X 7'-0"	C	SCW	1-3/4"	CLR	F4	HM	1/A7.13	2/A7.13		34	NONE	
127	SBI READING	3'-0" X 7'-0"	C	SCW	1-3/4"	CLR	F4	HM	1/A7.13	2/A7.13		34	NONE	
128	GENERAL CLASSROOM	3'-0" X 7'-0"	C	SCW	1-3/4"	CLR	F4	HM	6/A7.13	8, 11/A7.13		35	NONE	
129A	SMALL GROUP ROOM/READING	4'-0" X 8'-8"	B	G	1/2"				6/A7.13	7/A7.13		39	NONE	
129B	SMALL GROUP ROOM/READING	4'-0" X 8'-8"	B	G	1/2"				4/A7.13	4/A7.13		39	NONE	
131A	SCIENCE CLASSROOM 5/6 GRADES	3'-0" X 7'-0"	C	SCW	1-3/4"	CLR	F4	HM	6/A7.13	8, 11/A7.13		34	NONE	
131B	PREP ROOM	3'-0" X 7'-0"	C	SCW	1-3/4"	CLR	F1	HM	9/A7.13 SIM	11/A7.13 SIM		37	NONE	
131C	SCIENCE CLASSROOM 5/6 GRADES	3'-0" X 7'-0"	A	SCW	1-3/4"	CLR	F1	HM	6/A7.13	7, 9/A7.13		24	NONE	
132	GENERAL CLASSROOM	3'-0" X 7'-0"	C	SCW	1-3/4"	CLR	F4	HM	6/A7.13	8, 11/A7.13		34	NONE	
133A	ACADEMIC TEAM ROOM	3'-0" X 9'-0"	B	G	1/2"							41	NONE	
133B	ACADEMIC TEAM ROOM	3'-0" X 9'-0"	B	G	1/2"							41	NONE	
133C	ACADEMIC TEAM ROOM	PR. 3'-0 3/4" X 7'-0"	FF	ALG	MFR	PVDF	SF1	AL	5/A6.11	6,7/A6.11	PVDF	72	NONE	SEE NOTES 6,9
133D	ACADEMIC TEAM ROOM	15'-1" X 6'-6"		MFR										
134A	ART CLASSROOM	3'-0" X 7'-0"	C	SCW	1-3/4"	CLR	F4	HM	1/A7.13	2/A7.13		34	NONE	
134C	ART CLASSROOM	3'-0" X 7'-0"	E	SCW	1-3/4"	CLR	F1	HM	1/A7.13	1/A7.13		30	NONE	
134D	ART CLASSROOM	PR. 3'-0" X 7'-0"	FF	ALG	MFR	PVDF	SF7	AL	5/A6.11	6,7/A6.11	PVDF	72	NONE	SEE NOTES 6,7,9
134F	ART CLASSROOM	3'-0" X 7'-0"	C	SCW	1-3/4"	CLR	F6	HM	6/A7.13	7/A7.13		24	NONE	
134G	ART CLASSROOM	3'-0" X 7'-0"	C	SCW	1-3/4"	CLR	F6	HM	6/A7.13	7/A7.13		24	NONE	
135A	ACADEMIC TEAM ROOM	3'-0" X 9'-0"	B	G	1/2"							41	NONE	
135B	ACADEMIC TEAM ROOM	3'-0" X 9'-0"	B	G	1/2"							41	NONE	
135C	ACADEMIC TEAM ROOM	PR. 3'-0 3/4" X 7'-0"	FF	ALG	MFR	PVDF	SF1	AL	5/A6.11	6,7/A6.11	PVDF	72	NONE	SEE NOTES 6,9
135D	ACADEMIC TEAM ROOM	15'-1" X 6'-6"		MFR										
136	GENER

GENERAL CONDITION NOTES:

A. PROVIDE INSULATION, WEATHERSTRIPPING AND THRESHOLD AT EXTERIOR DOORS.

B. ALL EXTERIOR HOLLOW METAL DOORS AND FRAMES TO BE GALVANIZED UNLESS NOTED OTHERWISE.

C. REFER TO SPECIFICATION SECTION 08 80 00 - GLAZING FOR INTERIOR GLASS TYPES.

D. REFER TO SPECIFICATION SECTION 08 51 13 - ALUMINUM WINDOWS FOR EXTERIOR GLASS TYPES.

E. THE FIRE RATING OF GLASS TYPE 3 SHALL EQUAL THE FIRE RATING OF THE DOOR IN WHICH IT IS FABRICATED.

F. THE FIRE RATING OF GLASS TYPE 3 WHERE SCHEDULED IN DOOR FRAMES SHALL EQUAL THE RATING OF THE PARTITION IN WHICH THE FRAME IS INSTALLED.

G. REFER TO DRAWING A7.05 FOR FLOOR TRANSITION DETAILS. COORDINATE LOCATIONS WITH A7.01 - ROOM FINISH SCHEDULE.

H. REFER TO MECHANICAL DRAWINGS FOR DOORS THAT REQUIRE UNDERCUTTING.

J. ELECTRICAL (26 00 00) SHALL INSTALL FLEXIBLE CONDUIT IN ALL DOOR FRAMES THAT HAVE DOOR POSITION SENSORS AND/OR ACCESS CONTROL DEVICES. COORDINATE CONDUIT REQUIRED AND LOCATION WITH ACCESS CONTROL (28 00 00).

K. ALL EXTERIOR DOOR FRAMES SHALL BE PREPARED TO RECEIVE DOOR POSITION INDICATORS AND/OR ACCESS CONTROL DEVICES AS IDENTIFIED IN THE HARDWARE SET. REFER TO SPECIFICATION SECTIONS; 08 71 00 - DOOR HARDWARE AND 28 00 00 - ELECTRONIC SAFETY AND SECURITY

L. REFER TO FLOOR PLANS FOR DOUBLE EGRESS DOOR FRAMES.

M. ELECTRICAL & DOOR HARDWARE SHALL COORDINATE WITH HOLLOW METAL, STOREFRONT, AND CURTAIN WALL FOR ACCESS CONTROL WIRING, REQUIREMENTS, PATHING , AND LOCATION.

N. FIELD VERIFY ROUGH OPENING PRIOR TO FABRICATION - IF ANY DISCREPANCY BRING TO THE NOTICE OF THE ARCHITECT.

P. ALL WOOD DOORS TO BE SLICED WHITE MAPLE WITH CLEAR FINISH.

SPECIAL CONDITION NOTES:

1. PROVIDE FULL ACCOUSTICAL PERIMETER GASKETING SYSTEM, REFER TO SPECIFICATION SECTION 08 71 00 - DOOR HARDWARE
2. PROVIDE FULL ACOUSTICAL PERIMETER GASKETING SYSTEM AND AUTOMATIC DROP BOTTOMS. REFER TO SPECIFICATION SECTION 08 71 00 - DOOR HARDWARE
3. PROVIDE ACOUSTIC DOOR, HARDWARE AND GLAZING. REFER TO SPECIFICATION SECTIONS; 08 34 73 - SOUND CONTROL DOORS, 08 71 00 - DOOR HARDWARE AND 08 80 00 - GLAZING
4. PROVIDE MAGNETIC HOLD OPEN. REFER TO SPECIFICATION SECTION 26 00 00 - ELECTRICAL
5. DOOR, FRAME, AND HARDWARE PART OF INTERIOR GLASS WALL SYSTEM. REFER TO SPECIFICATION SECTION 10 22 26 - OPERABLE GLASS PARTITIONS
6. PROVIDE DOOR POSITION SENSOR. REFER TO SPECIFICATION SECTIONS; 08 71 00 - DOOR HARDWARE AND 28 00 00 - ELECTRONIC SAFETY AND SECURITY
7. PROVIDE REQUEST TO EXIT. REFER TO SPECIFICATION SECTIONS; 08 71 00 - DOOR HARDWARE AND 28 00 00 - ELECTRONIC SAFETY AND SECURITY
8. PROVIDE CARD READER AND REQUEST TO EXIT. REFER TO SPECIFICATION SECTIONS; 08 71 00 - DOOR HARDWARE AND 28 00 00 - ELECTRONIC SAFETY AND SECURITY
9. PROVIDE ALUMINUM THRESHOLD. REFER TO SPECIFICATION SECTION 08 71 00 - DOOR HARDWARE
10. PROVIDE SOLID GROUT FILL AT FRAME.
11. PROVIDE FULL ACOUSTICAL PERIMETER GASKETING SYSTEM, INCLUDING ADJUSTABLE GASKETS, AUTOMATIC DROP BOTTOMS, AND CENTER ASTRAGAL. REFER TO SPECIFICATION SECTION 08 71 00 - DOOR HARDWARE
12. PROVIDE FULL ACOUSTICAL PERIMETER GASKETING SYSTEM, INCLUDING ADJUSTABLE GASKETS, AUTOMATIC DROP BOTTOMS. REFER TO SPECIFICATION SECTION 08 71 00 - DOOR HARDWARE
13. PROVIDE STAINLESS STEEL COAT HOOKS. REFER TO SPECIFICATION SECTION, 08 71 00 - DOOR HARDWARE. ARCHITECT TO APPROVE INSTALLED LOCATION IN THE FIELD.
14. DOOR OPERATOR

ABBREVIATIONS:

ACST	ACOUSTIC
AL	ALUMINUM
ALG	ALUMINUM AND GLASS
CLR	CLEAR FINISH
EXT	EXTERIOR
FBGL	FIBERGLASS
HM	HOLLOW METAL
MFR	MANUFACTURERS STANDARD
OH	OVERHEAD DOOR
OHC	OVERHEAD COILING COUNTER
P	PAINTED FINISH
PC	POWDER COAT FINISH
PS	POWER SUPPLY REQUIRED FOR DOOR HARDWARE
PS1	POWER SUPPLY FOR DOOR OPERATOR ONLY. NO ELECTRIFIED DOOR HARDWARE
PVDF	POLYVINYLDENE FLUORIDE
SCW	SOLID CORE WOOD (FLUSH)
STL	STEEL
TBHM	THERMALLY BROKEN HOLLOW METAL FRAME

DOOR SCHEDULE

THIRD FLOOR (CONT.)

		DOOR					FRAME							
DOOR #	ROOM NAME	DR SIZE	TYPE	MAT'L.	THK.	DR FIN	TYPE	MAT'L	HEAD	JAMB	FIN.	HDW SET	FIRE RATING	REMARKS
340	GENERAL CLASSROOM	3'-0" X 7'-0"	C	SCW	1-3/4"	CLR	F4	HM	6/A7.13	8, 11/A7.13 SIM		34	NONE	
341	GENERAL CLASSROOM	3'-0" X 7'-0"	C	SCW	1-3/4"	CLR	F4	HM	6/A7.13	8, 11/A7.13 SIM		35	NONE	
342A	SMALL GROUP SEMINAR	4'-0" X 8'-8"	B	G	1/2"				4/A7.13	4/A7.13		39	NONE	
342B	SMALL GROUP SEMINAR	4'-0" X 8'-8"	B	G	1/2"				4/A7.13	4/A7.13		39	NONE	
344	GENERAL CLASSROOM	3'-0" X 7'-0"	C	SCW	1-3/4"	CLR	F4	HM	6/A7.13	8, 11/A7.13 SIM		34	NONE	
345A	KITCHEN	3'-0" X 7'-0"	C	SCW	1-3/4"	CLR	F1	HM	1/A7.13	2/A7.13		23	NONE	
345B	KITCHEN	3'-0" X 7'-0"	C	SCW	1-3/4"	CLR	F1	HM	1/A7.13	1/A7.13		26	NONE	
345C	KITCHEN	3'-0" X 7'-0"	C	SCW	1-3/4"	CLR	F1	HM	1/A7.13	1/A7.13		15	NONE	
345D	KITCHEN	3'-0" X 7'-0"	C	SCW	1-3/4"	CLR	F1	HM	1/A7.13	1/A7.13		23	NONE	
345E	KITCHEN	3'-0" X 7'-0"	A	SCW	1-3/4"	CLR	F1	HM	1/A7.13	1/A7.13				
345F	KITCHEN	7'-0" X 7'-2"		MFR										
345G	KITCHEN	7'-0" X 7'-2"		MFR										
346	ELEC	3'-0" X 7'-0"	A	SCW	1-3/4"	CLR	F1	HM	1/A7.13	1/A7.13		15	NONE	
347	CHAIR/TABLE EQUIP STORAGE	PR. 3'-0" X 7'-0"	AA	SCW	1-3/4"	CLR	F2	HM	10/A7.13	10/A7.13		20	NONE	
C304	CORRIDOR	PR. 3'-0" X 7'-0"	AA	SCW	1-3/4"	CLR	F2	HM	3/A7.13	3/A7.13		07	NONE	
T3-2B	TOILET	3'-0" X 7'-0"	A	SCW	1-3/4"	CLR	F1	HM	1/A7.13	1/A7.13		14	NONE	
T3-3B	TOILET	3'-0" X 7'-0"	A	SCW	1-3/4"	CLR	F1	HM	1/A7.13	2/A7.13		14	NONE	
T3-4A	TOILET	3'-0" X 7'-0"	A	SCW	1-3/4"	CLR	F1	HM	9/A7.13	8, 11/A7.13 SIM		14	NONE	
T3-4B	TOILET	3'-0" X 7'-0"	A	SCW	1-3/4"	CLR	F1	HM	9/A7.13	11, 15/A7.13 SIM		14	NONE	
T3-5B	TOILET	3'-0" X 7'-0"	A	SCW	1-3/4"	CLR	F1	HM	1/A7.13	2/A7.13		14	NONE	
T3-6B	TOILET	3'-0" X 7'-0"	A	SCW	1-3/4"	CLR	F1	HM	1/A7.13	2/A7.13		14	NONE	
ST2-3	STAIR 2	PR. 3'-0" X 7'-0"	EE	SCW	1-3/4"	CLR	F2	HM	6/A7.13 SIM	8/A7.13 SIM		44	90 MIN.	
ST3-3	STAIR 3	PR. 3'-0" X 7'-0"	EE	SCW	1-3/4"	CLR	F2	HM	6/A7.13 SIM	8/A7.13 SIM		44	90 MIN.	
ST4-3	STAIR 4	PR. 3'-0" X 7'-0"	EE	SCW	1-3/4"	CLR	F2	HM	6/A7.13 SIM	8/A7.13 SIM		44	90 MIN.	
ST5-3	STAIR 5	PR. 3'-0" X 7'-0"	EE	SCW	1-3/4"	CLR	F2	HM	6/A7.13 SIM	8/A7.13 SIM		44	90 MIN.	
ST6-3	STAIR 6	PR. 3'-0" X 7'-0"	EE	SCW	1-3/4"	CLR	F2	HM	6/A7.13 SIM	8/A7.13 SIM		44	90 MIN.	
C300	ROOF BELOW	3'-0" X 7'-0"	F	ALG	MFR	PVDF	SF2	AL			PVDF	70	NONE	SEE NOTES 6,7,9

DOOR SCHEDULE

FOURTH FLOOR

		DOOR					FRAME							
DOOR #	ROOM NAME	DR SIZE	TYPE	MAT'L.	THK.	DR FIN	TYPE	MAT'L	HEAD	JAMB	FIN.	HDW SET	FIRE RATING	REMARKS
402	ELEV NO. 1 EQUIP.	3'-6" X 7'-0"	A	SCW	1-3/4"	CLR	F1	HM	1/A7.13	2/A7.13		17	90 MIN.	
403	IDF	3'-0" X 7'-0"	A	SCW	1-3/4"	CLR	F1	HM	1/A7.13	1/A7.13		15	NONE	
404	GENERAL CLASSROOM	3'-0" X 7'-0"	C	SCW	1-3/4"	CLR	F4	HM	6/A7.13	8, 11/A7.13		35	NONE	
405A	SMALL GROUP SEMINAR	4'-0" X 8'-8"	B	G	1/2"				4/A7.13	4/A7.13		39	NONE	
405B	SMALL GROUP SEMINAR	4'-0" X 8'-8"	B	G	1/2"				4/A7.13	4/A7.13		39	NONE	
407	GENERAL CLASSROOM	3'-0" X 7'-0"	C	SCW	1-3/4"	CLR	F4	HM	6/A7.13	8, 11/A7.13		34	NONE	
408	READING CLASSROOM	3'-0" X 7'-0"	C	SCW	1-3/4"	CLR	F4	HM	6/A7.13	8, 11/A7.13		34	NONE	
409	LANGUAGE BASED - 8TH GRADE	3'-0" X 7'-0"	C	SCW	1-3/4"	CLR	F4	HM	6/A7.13	8, 11/A7.13		34	NONE	
411	SMALL GROUP ROOM/READING	4'-0" X 8'-8"	B	G	1/2"				4/A7.13	4/A7.13		39	NONE	
413A	SCIENCE CLASSROOM 7/8 GRADES	3'-0" X 7'-0"	C	SCW	1-3/4"	CLR	F4	HM	6/A7.13	8, 11/A7.13		34	NONE	
413B	PREP ROOM	3'-0" X 7'-0"	C	SCW	1-3/4"	CLR	F1	HM	9/A7.13 SIM	11/A7.13 SIM		37	NONE	
414	GENERAL CLASSROOM	3'-0" X 7'-0"	C	SCW	1-3/4"	CLR	F4	HM	6/A7.13	8, 11/A7.13		34	NONE	
415A	ACADEMIC TEAM ROOM	3'-0" X 9'-0"	B	G	1/2"							41	NONE	
415B	ACADEMIC TEAM ROOM	3'-0" X 9'-0"	B	G	1/2"							41	NONE	
415C	ACADEMIC TEAM ROOM	15'-1" X 6'-6"		MFR										
417A	INSTRUCTIONAL COACH (LITERACY)	3'-0" X 7'-0"	C	SCW	1-3/4"	CLR	F5	HM	6/A7.13 SIM	7/A7.13 SIM		34	NONE	
417B	INSTRUCTIONAL COACH (MATH)	3'-0" X 7'-0"	C	SCW	1-3/4"	CLR	F8	HM	6/A7.13 SIM	7/A7.13 SIM		35	NONE	
418	SUPERVISORY SPARE OFFICE	3'-0" X 7'-0"	C	SCW	1-3/4"	CLR	F6	HM	3/A7.13	5, 15/A7.13 SIM		28	NONE	
419	IDF	3'-0" X 7'-0"	A	SCW	1-3/4"	CLR	F1	HM	1/A7.13	2/A7.13		15	NONE	
419B	CUSTODIAL	4'-0" X 7'-0"	A	SCW	1-3/4"	CLR	F1	HM	3/A7.13	5, 15/A7.13 SIM		15	NONE	
420	TEACHERS COLLABORATION ROOM	3'-0" X 7'-0"	C	SCW	1-3/4"	CLR	F5	HM	10/A7.13	11/A7.13		37	NONE	
421A	SSP - 8TH GRADE	3'-0" X 7'-0"	C	SCW	1-3/4"	CLR	F4	HM	9/A7.13	11/A7.13		34	NONE	
421B	SSP - OFFICE	3'-0" X 7'-0"	C	SCW	1-3/4"	CLR	F1	HM	1/A7.13	1/A7.13		28	NONE	
422	GENERAL CLASSROOM	3'-0" X 7'-0"	C	SCW	1-3/4"	CLR	F4	HM	6/A7.13	8, 11/A7.13		35	NONE	
423A	SMALL GROUP SEMINAR	4'-0" X 8'-8"	B	G	1/2"				4/A7.13	4/A7.13		39	NONE	
423B	SMALL GROUP SEMINAR	4'-0" X 8'-8"	B	G	1/2"				4/A7.13	4/A7.13		39	NONE	
425	GENERAL CLASSROOM	3'-0" X 7'-0"	C	SCW	1-3/4"	CLR	F4	HM	6/A7.13	8, 11/A7.13		34	NONE	
426	THERAPEUTIC LEARNING 7/8 GRADES	3'-0" X 7'-0"	C	SCW	1-3/4"	CLR	F4	HM	6/A7.13	2, 8/A7.13		34	NONE	
427	SBI SS	3'-0" X 7'-0"	C	SCW	1-3/4"	CLR	F4	HM	6/A7.13	2, 8/A7.13		34	NONE	
429	SMALL GROUP ROOM/READING	4'-0" X 8'-8"	B	G	1/2"				4/A7.13	4/A7.13		39	NONE	
431A	SCIENCE CLASSROOM 7/8 GRADES	3'-0" X 7'-0"	C	SCW	1-3/4"	CLR	F4	HM	6/A7.13	8, 11/A7.13		34	NONE	
431B	PREP ROOM	3'-0" X 7'-0"	C	SCW	1-3/4"	CLR	F1	HM	9/A7.13 SIM	11/A7.13 SIM		37	NONE	
432	GENERAL CLASSROOM	3'-0" X 7'-0"	C	SCW	1-3/4"	CLR	F4	HM	6/A7.13	8, 11/A7.13		34	NONE	
433A	ACADEMIC TEAM ROOM	3'-0" X 9'-0"	B	G	1/2"							41	NONE	
433B	ACADEMIC TEAM ROOM	3'-0" X 9'-0"	B	G	1/2"							41	NONE	
433C	ACADEMIC TEAM ROOM	15'-1" X 6'-6"		MFR										
435A	ACADEMIC TEAM ROOM	3'-0" X 9'-0"	B	G	1/2"							41	NONE	
435B	ACADEMIC TEAM ROOM	3'-0" X 9'-0"	B	G	1/2"							41	NONE	
435C	ACADEMIC TEAM ROOM	15'-1" X 6'-6"		MFR										
436	GENERAL CLASSROOM	3'-0" X 7'-0"	C	SCW	1-3/4"	CLR	F4	HM	6/A7.13	8, 11/A7.13		34	NONE	
437	SMALL GROUP ROOM/READING	4'-0" X 8'-8"	B	G	1/2"				4/A7.13	4/A7.13		39	NONE	
439A	SCIENCE CLASSROOM 7/8 GRADES	3'-0" X 7'-0"	C	SCW	1-3/4"	CLR	F4	HM	6/A7.13	8, 11/A7.13		34	NONE	
439B	PREP ROOM	3'-0" X 7'-0"	C	SCW	1-3/4"	CLR	F1	HM	9/A7.13 SIM	11/A7.13 SIM		37	NONE	
441	GENERAL CLASSROOM	3'-0" X 7'-0"	C	SCW	1-3/4"	CLR	F4	HM	6/A7.13	8, 11/A7.13		35	NONE	
442A	SMALL GROUP SEMINAR	4'-0" X 8'-8"	B	G	1/2"				4/A7.13	4/A7.13		39	NONE	
442B	SMALL GROUP SEMINAR	4'-0" X 8'-8"	B	G	1/2"				4/A7.13	4/A7.13		39	NONE	
444	GENERAL CLASSROOM	3'-0" X 7'-0"	C	SCW	1-3/4"	CLR	F4	HM	6/A7.13	8, 11/A7.13		34	NONE	
445	READING CLASSROOM	3'-0" X 7'-0"	C	SCW	1-3/4"	CLR	F4	HM	6/A7.13	8, 11/A7.13		35	NONE	
446	IDF	3'-0" X 7'-0"	A	SCW	1-3/4"	CLR	F1	HM	1/A7.13	1/A7.13		15	NONE	
447	CUSTODIAL	4'-0" X 7'-0"	A	SCW	1-3/4"	CLR	F1	HM	10/A7.13	10/A7.13		15	NONE	
448A	ELEC	3'-0" X 7'-0"	A	SCW	1-3/4"	CLR	F1	HM	1/A7.13	1/A7.13		15	NONE	
448B	EMER ELEC	PR. 3'-0" X 7'-0"	AA	SCW	1-3/4"	CLR	F2	HM	3/A7.13	3/A7.13				
449	ELEV NO. 2 EQUIP.	3'-6" X 7'-0"	A	SCW	1-3/4"	CLR	F1	HM	1/A7.13	1/A7.13		16	45 MIN.	
T4-2B	TOILET	3'-0" X 7'-0"	A	SCW	1-3/4"	CLR	F1	HM	1/A7.13	1/A7.13		14	NONE	
T4-3B	TOILET	3'-0" X 7'-0"	A	SCW	1-3/4"	CLR	F1	HM	1/A7.13	2/A7.13		14	NONE	
T4-4A	TOILET	3'-0" X 7'-0"	A	SCW	1-3/4"	CLR	F1	HM	9/A7.13	8, 11/A7.13 SIM		14	NONE	
T4-4B	TOILET	3'-0" X 7'-0"	A	SCW	1-3/4"	CLR	F1	HM	9/A7.13	8, 11/A7.13 SIM		14	NONE	
T4-5B	TOILET	3'-0" X 7'-0"	A	SCW	1-3/4"	CLR	F1	HM	1/A7.13	2/A7.13		14	NONE	
T4-6B	TOILET	3'-0" X 7'-0"	A	SCW	1-3/4"	CLR	F1	HM	1/A7.13	2/A7.13		14	NONE	
ST2-4	STAIR 2	PR. 3'-0" X 7'-0"	EE	SCW	1-3/4"	CLR	F2	HM	6/A7.13 SIM	8/A7.13 SIM		44	90 MIN.	
ST3-4	STAIR 3	PR. 3'-0" X 7'-0"	EE	SCW	1-3/4"	CLR	F2	HM	6/A7.13 SIM	8/A7.13 SIM		44	90 MIN.	
ST4-4	STAIR 4	PR. 3'-0" X 7'-0"	EE	SCW	1-3/4"	CLR	F2	HM	6/A7.13 SIM	8/A7.13 SIM		44	90 MIN.	
ST5-4	STAIR 5	PR. 3'-0" X 7'-0"	EE	SCW	1-3/4"	CLR	F2	HM	6/A7.13 SIM	8/A7.13 SIM		44	90 MIN.	
ST6-4	STAIR 6	PR. 3'-0" X 7'-0"	EE	SCW	1-3/4"	CLR	F2	HM	6/A7.13 SIM	8/A7.13 SIM		44	90 MIN.	
501	ELEVATOR VESTIBULE	3'-0" X 7'-0"	F	ALG	MFR			AL				71	NONE	SEE NOTE 9

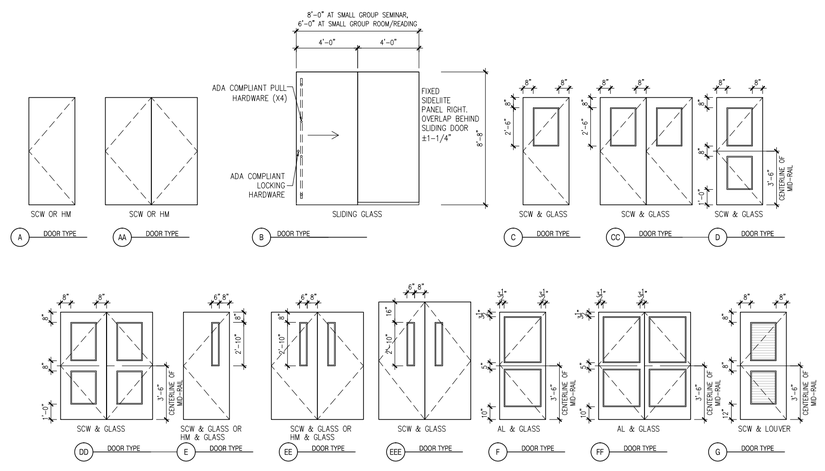

DOOR SCHEDULE

SECOND FLOOR

		DOOR					FRAME							
DOOR #	ROOM NAME	DR SIZE	TYPE	MAT'L.	THK.	DR FIN	TYPE	MAT'L	HEAD	JAMB	FIN.	HDW SET	FIRE RATING	REMARKS
200A	GUIDANCE/NURSE RECEPTION	3'-0" X 7'-0"	D	SCW	1-3/4"	CLR	F5	HM	6/A7.13 SIM	7/A7.13 SIM		64	NONE	SEE NOTES 6,7
200B	GUIDANCE OFFICE	3'-0" X 7'-0"	D	SCW	1-3/4"	CLR	F5	HM	4/A7.13	14/A7.13 SIM		28	NONE	
200C	GUIDANCE OFFICE	3'-0" X 7'-0"	D	SCW	1-3/4"	CLR	F5	HM	4/A7.13	4, 14/A7.13 SIM		28	NONE	
200D	GUIDANCE OFFICE	3'-0" X 7'-0"	D	SCW	1-3/4"	CLR	F5	HM	4/A7.13	4/A7.13		28	NONE	
200E	GUIDANCE OFFICE	3'-0" X 7'-0"	D	SCW	1-3/4"	CLR	F5	HM	4/A7.13	4/A7.13		28	NONE	
200F	GUIDANCE STOREROOM	3'-0" X 7'-0"	A	SCW	1-3/4"	CLR	F1	HM	9/A7.13	9, 14/A7.13 SIM		15	NONE	
201A	NURSE SUITE	3'-0" X 7'-0"	D	SCW	1-3/4"	CLR	F5	HM	4/A7.13	4, 7/A7.13 SIM		63	NONE	SEE NOTES 6,7
201B	EXAM/ SCREEN ROOM	3'-0" X 7'-0"	E	SCW	1-3/4"	CLR	F1	HM	1/A7.13	1/A7.13		32	NONE	
201C	EXAM ROOM	3'-0" X 7'-0"	E	SCW	1-3/4"	CLR	F1	HM	1/A7.13 SIM	1, 14/A7.13 SIM		28	NONE	
201D	NURSE OFFICE	3'-0" X 7'-0"	C	SCW	1-3/4"	CLR	F5	HM	4/A7.13	4, 14/A7.13 SIM				
201E	RESTING	3'-0" X 7'-0"	E	SCW	1-3/4"	CLR	F1	HM	1/A7.13	1, 7/A7.13 SIM		31	NONE	
203	IDF	3'-0" X 7'-0"	A	SCW	1-3/4"	CLR	F1	HM	1/A7.13	2/A7.13		15	NONE	
204	GENERAL CLASSROOM	3'-0" X 7'-0"	C	SCW	1-3/4"	CLR	F4	HM	6/A7.13	8, 11/A7.13		35	NONE	
205A	SMALL GROUP SEMINAR	4'-0" X 8'-8"	B	G	1/2"				4/A7.13	4/A7.13		39	NONE	
205B	SMALL GROUP SEMINAR	4'-0" X 8'-8"	B	G	1/2"				4/A7.13	4/A7.13		39	NONE	
207	GENERAL CLASSROOM	3'-0" X 7'-0"	C	SCW	1-3/4"	CLR	F4	HM	6/A7.13	8, 11/A7.13		34	NONE	
208	READING CLASSROOM	3'-0" X 7'-0"	C	SCW	1-3/4"	CLR	F4	HM	6/A7.13	8, 11/A7.13		34	NONE	
209	LANGUAGE BASED - 6TH GRADE	3'-0" X 7'-0"	C	SCW	1-3/4"	CLR	F4	HM	6/A7.13	8, 11/A7.13		34	NONE	
210	LANGUAGE CLASSROOM	3'-0" X 7'-0"	C	SCW	1-3/4"	CLR	F4	HM	6/A7.13	8, 11/A7.13		35	NONE	
211A	SMALL GROUP ROOM/READING	4'-0" X 8'-8"	B	G	1/2"				6/A7.13	7/A7.13		39	NONE	
211B	SMALL GROUP ROOM/READING	4'-0" X 8'-8"	B	G	1/2"				4/A7.13	4/A7.13		39	NONE	
213A	SCIENCE CLASSROOM 5/6 GRADES	3'-0" X 7'-0"	C	SCW	1-3/4"	CLR	F4	HM	6/A7.13	8, 11/A7.13		34	NONE	
213B	PREP ROOM	3'-0" X 7'-0"	C	SCW	1-3/4"	CLR	F1	HM	9/A7.13 SIM	11/A7.13 SIM		37	NONE	
213C	SCIENCE CLASSROOM 5/6 GRADES	3'-0" X 7'-0"	A	SCW	1-3/4"	CLR	F1	HM	6/A7.13	7, 9/A7.13		24	NONE	
214	GENERAL CLASSROOM	3'-0" X 7'-0"	C	SCW	1-3/4"	CLR	F4	HM	6/A7.13	8, 11/A7.13		34	NONE	
215A	ACADEMIC TEAM ROOM	3'-0" X 9'-0"	B	G	1/2"							41	NONE	
215B	ACADEMIC TEAM ROOM	3'-0" X 9'-0"	B	G	1/2"							41	NONE	
215C	ACADEMIC TEAM ROOM	15'-1" X 6'-6"		MFR										
217A	GUIDANCE MEETING ROOM	3'-0" X 7'-0"	C	SCW	1-3/4"	CLR	F5	HM	6/A7.13 SIM	7/A7.13 SIM		34	NONE	
217B	SPED MEETING ROOM	3'-0" X 7'-0"	C	SCW	1-3/4"	CLR	F8	HM	6/A7.13 SIM	7/A7.13 SIM		35	NONE	
218	SUPERVISORY SPARE OFFICE	3'-0" X 7'-0"	C	SCW	1-3/4"	CLR	F6	HM	3/A7.13	5, 15/A7.13 SIM		28	NONE	
219	IDF	3'-0" X 7'-0"	A	SCW	1-3/4"	CLR	F1	HM	1/A7.13	2/A7.13		15	NONE	
219B	CUSTODIAL	4'-0" X 7'-0"	A	SCW	1-3/4"	CLR	F1	HM	3/A7.13	5, 15/A7.13 SIM		15	NONE	
220	TEACHERS COLLABORATION ROOM	3'-0" X 7'-0"	C	SCW	1-3/4"	CLR	F5	HM	10/A7.13	11/A7.13		37	NONE	
221A	SSP - 6TH GRADE	3'-0" X 7'-0"	C	SCW	1-3/4"	CLR	F4	HM	9/A7.13	11/A7.13		34	NONE	
221B	SSP - OFFICE	3'-0" X 7'-0"	C	SCW	1-3/4"	CLR	F1	HM	1/A7.13	1/A7.13		28	NONE	
222	GENERAL CLASSROOM	3'-0" X 7'-0"	C	SCW	1-3/4"	CLR	F4	HM	6/A7.13	8, 11/A7.13 SIM		35	NONE	
223A	SMALL GROUP SEMINAR	4'-0" X 8'-8"	B	G	1/2"				4/A7.13	4/A7.13		39	NONE	
223B	SMALL GROUP SEMINAR	4'-0" X 8'-8"	B	G	1/2"				4/A7.13	4/A7.13		39	NONE	
225	GENERAL CLASSROOM	3'-0" X 7'-0"	C	SCW	1-3/4"	CLR	F4	HM	6/A7.13	8, 11/A7.13 SIM		34	NONE	
226	LEARNING CENTER - 5/6 GRADES	3'-0" X 7'-0"	C	SCW	1-3/4"	CLR	F4	HM	6/A7.13	2, 8/A7.13		34	NONE	
227	SBI MATH	3'-0" X 7'-0"	C	SCW	1-3/4"	CLR	F4	HM	6/A7.13	2, 8/A7.13		34	NONE	
228A	READING CLASSROOM	3'-0" X 7'-0"	C	SCW	1-3/4"	CLR	F1	HM	6/A7.13	8, 11/A7.13 SIM		34	NONE	
228B	READING CLASSROOM	3'-0" X 7'-0"	C	SCW	1-3/4"	CLR	F1	HM	6/A7.13	8, 11/A7.13 SIM		35	NONE	
229A	SMALL GROUP ROOM/READING	4'-0" X 8'-8"	B	G	1/2"				6/A7.13	7/A7.13		39	NONE	
229B	SMALL GROUP ROOM/READING	4'-0" X 8'-8"	B	G	1/2"				4/A7.13	4/A7.13		39	NONE	
231A	SCIENCE CLASSROOM 5/6 GRADES	3'-0" X 7'-0"	C	SCW	1-3/4"	CLR	F4	HM	6/A7.13	8, 11/A7.13 SIM		34	NONE	
231B	PREP ROOM	3'-0" X 7'-0"	C	SCW	1-3/4"	CLR	F1	HM	9/A7.13 SIM	11/A7.13 SIM		37	NONE	
231C	SCIENCE CLASSROOM 5/6 GRADES	3'-0" X 7'-0"	A	SCW	1-3/4"	CLR	F1	HM	6/A7.13	7, 9/A7.13		24	NONE	
232	GENERAL CLASSROOM	3'-0" X 7'-0"	C	SCW	1-3/4"	CLR	F4	HM	6/A7.13	8, 11/A7.13 SIM		34	NONE	
233A	ACADEMIC TEAM ROOM	3'-0" X 9'-0"	B	G	1/2"							41	NONE	
233B	ACADEMIC TEAM ROOM	3'-0" X 9'-0"	B	G	1/2"							41	NONE	
233C	ACADEMIC TEAM ROOM	15'-1" X 6'-6"		MFR										
235A	ACADEMIC TEAM ROOM	3'-0" X 9'-0"	B	G	1/2"							41	NONE	
235B	ACADEMIC TEAM ROOM	3'-0" X 9'-0"	B

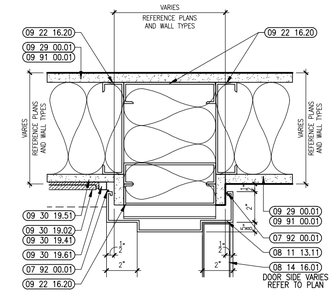

15 TYPICAL JAMB DETAIL W/ TILE - PERPINDICULAR
3"=1'-0"

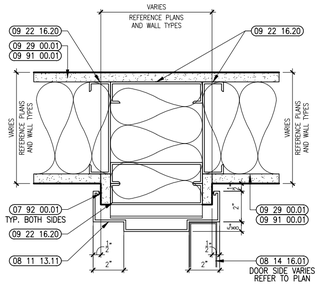

14 TYPICAL JAMB DETAIL - PERPINDICULAR
3"=1'-0"

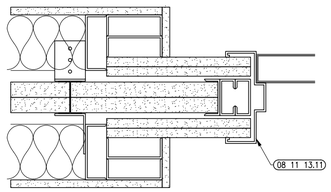

13 TYPICAL JAMB DETAIL - PERPINDICULAR
3"=1'-0"

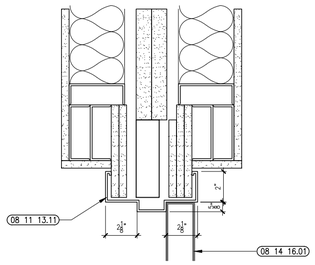

12 TYPICAL HEAD DETAIL - PERPINDICULAR
3"=1'-0"

SIDE OF WALL WITH TILE MAY VARY, REFERENCE PLANS AND INTERIOR ELEVATIONS

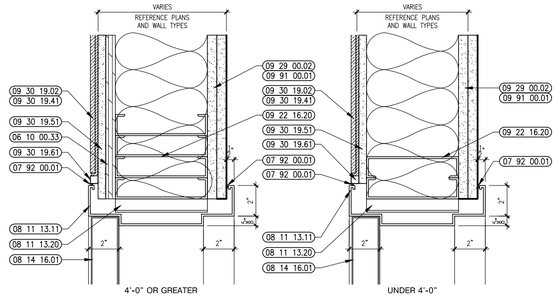

11 TYPICAL JAMB DETAIL W/ TILE
3"=1'-0"

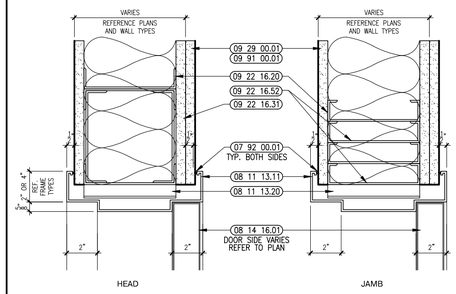

10 DOOR DETAILS @ OPENINGS 4'-0" OR GREATER
3"=1'-0"

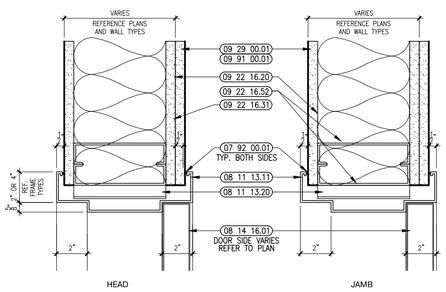

9 DOOR DETAILS @ OPENINGS UNDER 4'-0"
3"=1'-0"

SIDE OF WALL WITH TILE MAY VARY, REFERENCE PLANS AND INTERIOR ELEVATIONS

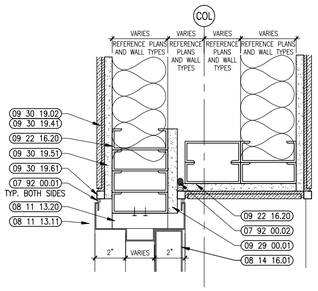

8 TYPICAL JAMB DETAIL W/ TILE - PERPINDICULAR
3"=1'-0"

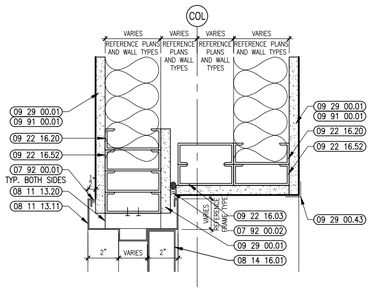

7 TYPICAL JAMB DETAIL - PERPINDICULAR
3"=1'-0"

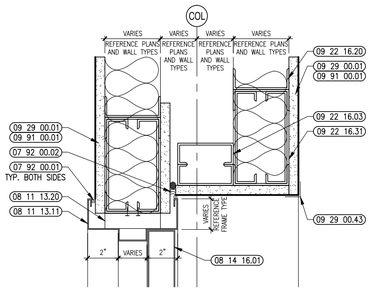

6 TYPICAL HEAD DETAIL - PERPINDICULAR
3"=1'-0"

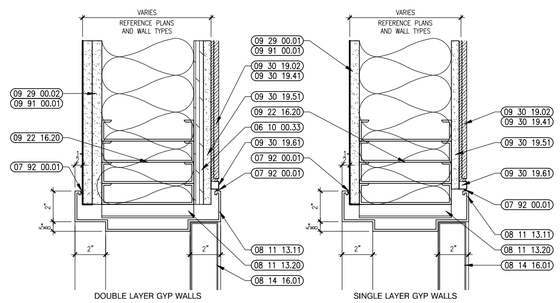

5 DOOR DETAILS W/ TILE @ OPENINGS 4'-0" OR GREATER
3"=1'-0"

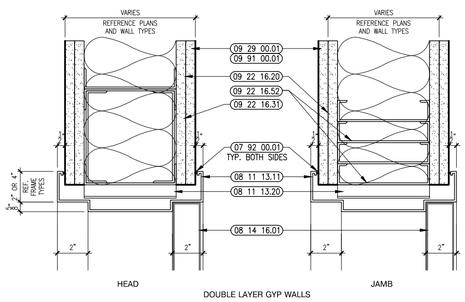

4 DOOR DETAILS @ OPENINGS 4'-0" OR GREATER
3"=1'-0"

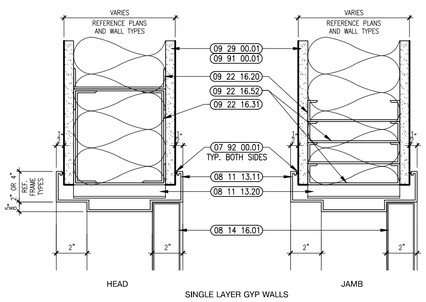

3 DOOR DETAILS @ OPENINGS 4'-0" OR GREATER
3"=1'-0"

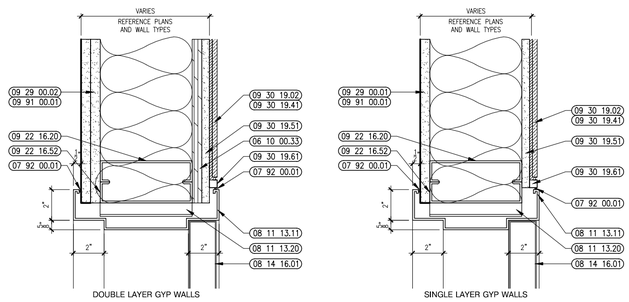

2 DOOR DETAILS W/ TILE @ OPENINGS UNDER 4'-0"
3"=1'-0"

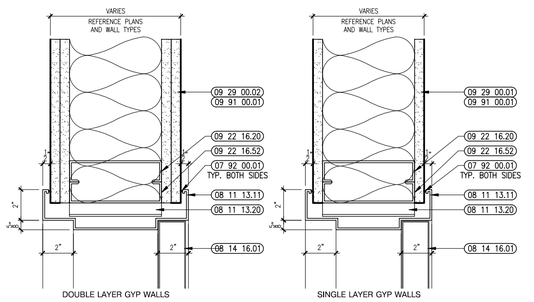

1 DOOR DETAILS @ OPENINGS UNDER 4'-0"
3"=1'-0"

A13 architects
526 Boston Post Rd Wayland, MA
508.358.0790 www.a13architects.com

BEVERLY MIDDLE SCHOOL

CABOT STREET
BEVERLY, MA 01915

KEYNOTE LEGEND: (REFERENCE SHEETS A0.01 & A0.02 FOR MASTER KEYNOTE LIST AND KEYNOTES NOT LISTED)

06 10 00.33	PLYWOOD – 5/8 INCH
07 92 00.01	JOINT SEALANT – TYPE AS REQUIRED
07 92 00.02	BACKER ROD AND SEALANT – TYPE AS REQUIRED
08 11 13.11	STEEL FRAME – SEE SCHEDULE FOR TYPES
08 11 13.20	STEEL FRAME CLIP BY FRAME INSTALLER
08 14 16.01	SOLID CORE FLUSH WOOD DOOR– SEE DOOR SCHEDULE
09 22 16.03	METAL STUD 3-5/8 INCH – 16 INCHES O.C. MAX
09 22 16.20	METAL STUD – REFER TO FLOOR PLANS FOR DEPTH
09 22 16.31	BOXED HEADER
09 22 16.52	DOUBLE STUD JAMB – SIZE AS REQUIRED
09 29 00.01	5/8 INCH GYPSUM BOARD – LEVEL 4 FINISH
09 29 00.02	5/8 INCH GYPSUM BOARD – 2 LAYERS – LEVEL 4 FINISH
09 29 00.43	CORNER BEAD
09 30 19.02	PORCELAIN WALL TILE
09 30 19.41	THIN SET TILE SETTING BED
09 30 19.51	CEMENTITIOUS BACKING BOARD
09 30 19.61	ALUMINUM CORNER TRIM
09 91 00.01	PAINT – SEE SCHEDULE

90% CONSTRUCTION DOCUMENTS

NOT FOR CONSTRUCTION

NORTH ARROW

KEYPLAN

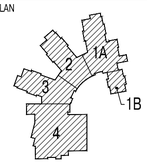

DRAWING NAME:

DOOR DETAILS

DRAWN BY:	MJR
REVIEWED BY:	BPH
SCALE:	As Noted
JOB NO.:	1403.00
DATE:	July 25, 2016
DRAWING NUMBER:	A7.13

Copyright © 2016 A13 Architects, LLC

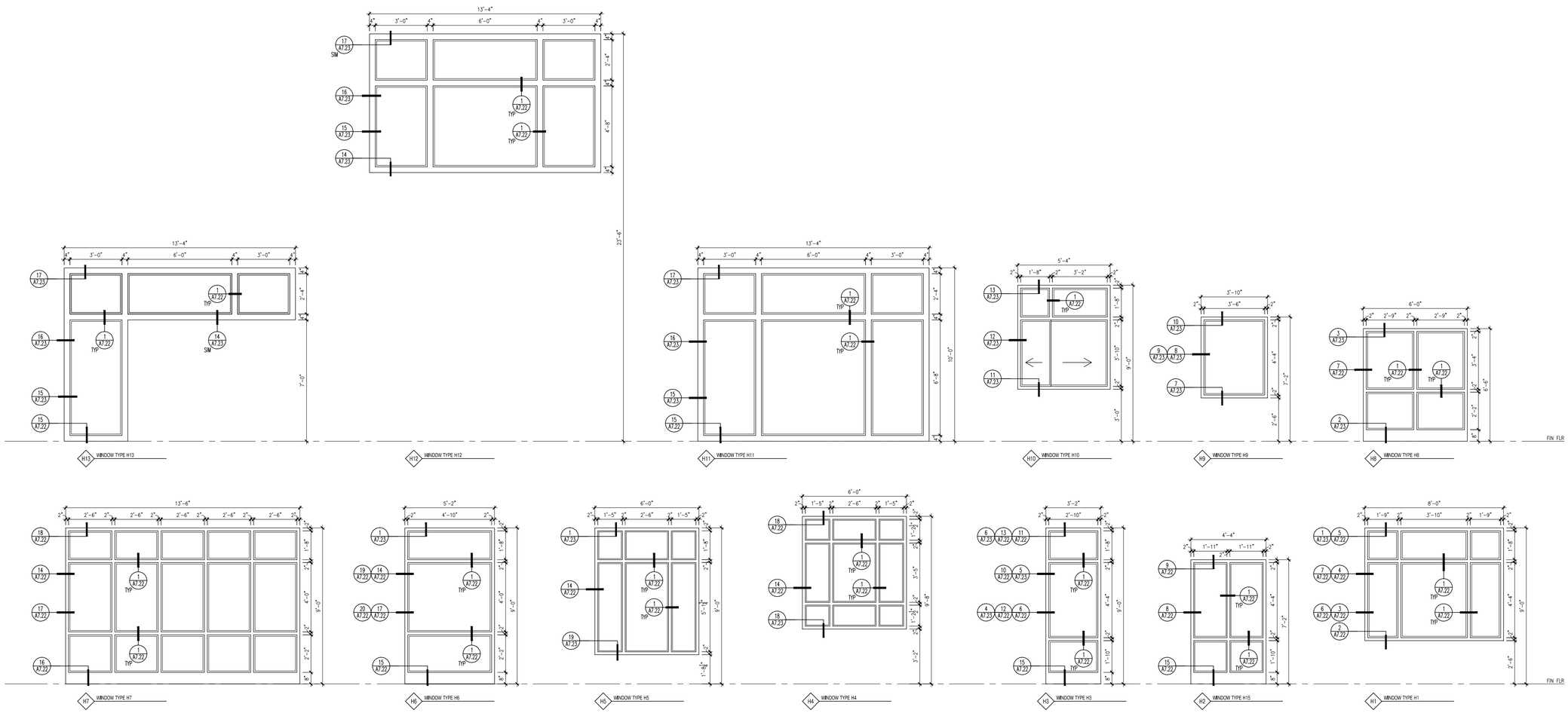

1 INTERIOR WINDOW TYPES
1/4" = 1'-0"

A13 architects
526 Boston Post Rd Wayland, MA
508.358.0790 www.a13architects.com

BEVERLY MIDDLE SCHOOL

CABOT STREET
BEVERLY, MA 01915

KEYNOTE LEGEND: (REFERENCE SHEETS A0.01 & A0.02 FOR MASTER KEYNOTE LIST AND KEYNOTES NOT LISTED)

Copyright © 2016 A13 Architects, LLC

90% CONSTRUCTION DOCUMENTS

NOT FOR CONSTRUCTION

NORTH ARROW

KEYPLAN

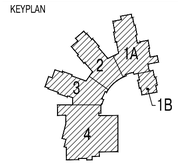

DRAWING NAME:

INTERIOR WINDOW TYPES

DRAWN BY:	JMR
REVIEWED BY:	BPH
SCALE:	As Noted
JOB NO.:	1403.00
DATE:	July 25, 2016
DRAWING NUMBER:	A7.21

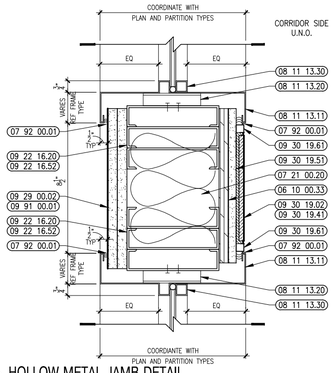

20 HOLLOW METAL JAMB DETAIL
3" = 1'-0"

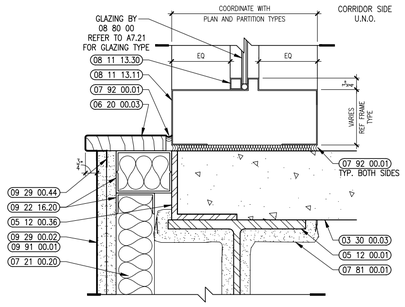

16 HOLLOW METAL SILL DETAIL
3" = 1'-0"

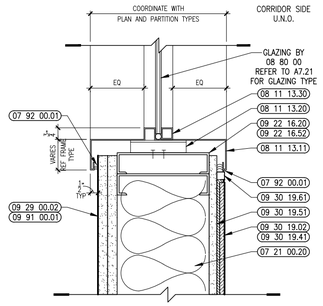

12 HOLLOW METAL JAMB DETAIL
3" = 1'-0"

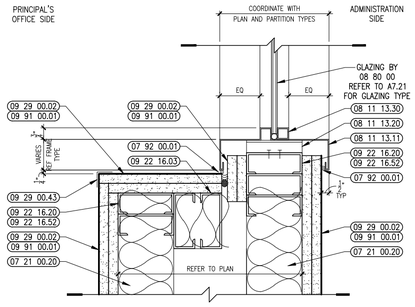

8 HOLLOW METAL JAMB DETAIL
3" = 1'-0"

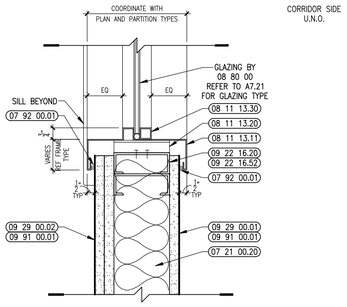

4 HOLLOW METAL JAMB DETAIL
3" = 1'-0"

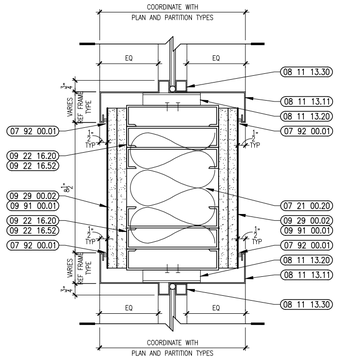

19 HOLLOW METAL JAMB DETAIL
3" = 1'-0"

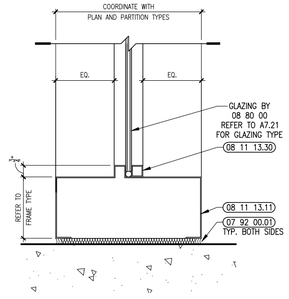

15 HOLLOW METAL SILL DETAIL
3" = 1'-0"

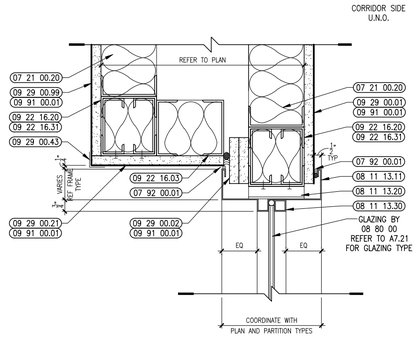

11 HOLLOW METAL HEAD DETAIL
3" = 1'-0"

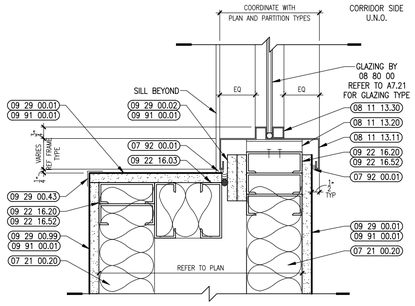

7 HOLLOW METAL JAMB DETAIL
3" = 1'-0"

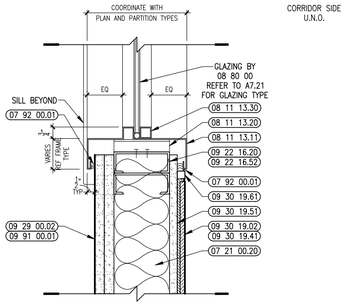

3 HOLLOW METAL JAMB DETAIL
3" = 1'-0"

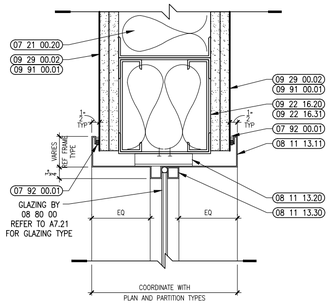

18 HOLLOW METAL HEAD DETAIL
3" = 1'-0"

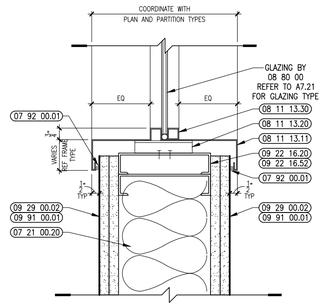

14 HOLLOW METAL JAMB DETAIL
3" = 1'-0"

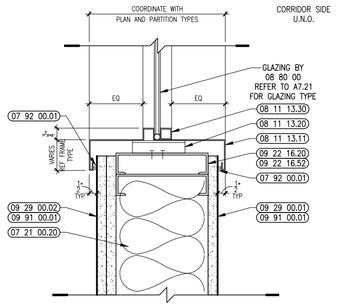

10 HOLLOW METAL JAMB DETAIL
3" = 1'-0"

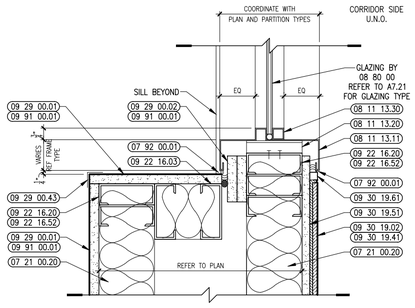

6 HOLLOW METAL JAMB DETAIL
3" = 1'-0"

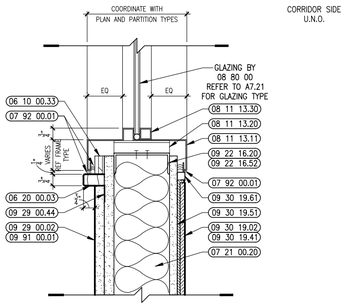

2 HOLLOW METAL SILL DETAIL
3" = 1'-0"

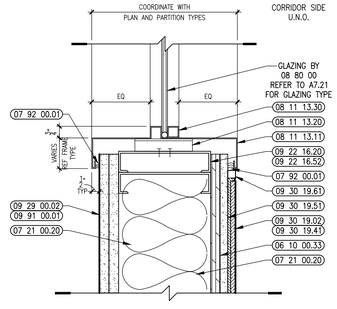

17 HOLLOW METAL JAMB DETAIL
3" = 1'-0"

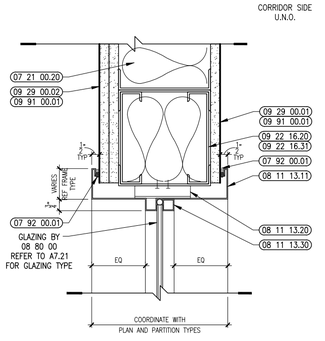

13 HOLLOW METAL HEAD DETAIL
3" = 1'-0"

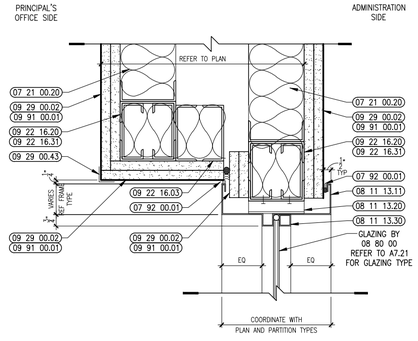

9 HOLLOW METAL HEAD DETAIL
3" = 1'-0"

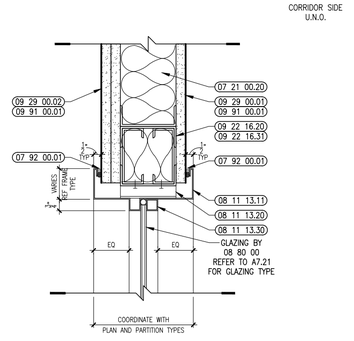

5 HOLLOW METAL HEAD DETAIL
3" = 1'-0"

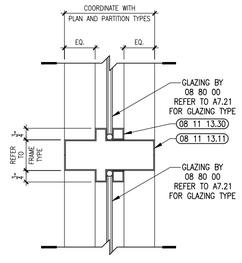

1 TYP. HOLLOW METAL MULLION DETAIL
3" = 1'-0"

Ai3 architects
526 Boston Post Rd Wayland, MA
508.358.0790 www.ai3architects.com

BEVERLY MIDDLE SCHOOL

CABOT STREET
BEVERLY, MA 01915

Copyright © 2016 Ai3 Architects, LLC

KEYNOTE LEGEND: (REFERENCE SHEETS A0.01 & A0.02 FOR MASTER KEYNOTE LIST AND KEYNOTES NOT LISTED)

03 30 00.03	CONCRETE SLAB ON DECK – SEE STRUCTURAL
05 12 00.01	STEEL BEAM – SEE STRUCTURAL
05 12 00.36	STEEL PLATE BENT – SEE STRUCTURAL
06 10 00.33	PLYWOOD – 5/8 INCH
06 20 00.03	HARDWOOD TRIM – 3/4 INCH – PENCILED EDGE 1/8 INCH RADIUS – TRANSPARENT FINISH
07 21 00.20	GLASS FIBER INSULATION
07 81 00.01	CEMENTITIOUS FIREPROOFING
07 92 00.01	JOINT SEALANT – TYPE AS REQUIRED
08 11 13.11	STEEL FRAME – SEE SCHEDULE FOR TYPES
08 11 13.20	STEEL FRAME CLIP BY FRAME INSTALLER
08 11 13.30	3/4" x 3/4" GLAZING STOP
09 22 16.03	METAL STUD 3-5/8 INCH – 16 INCHES O.C. MAX
09 22 16.20	METAL STUD – REFER TO FLOOR PLANS FOR DEPTH
09 22 16.31	BOXED HEADER
09 22 16.52	DOUBLE STUD JAMB – SIZE AS REQUIRED
09 29 00.01	5/8 INCH GYPSUM BOARD – LEVEL 4 FINISH
09 29 00.02	5/8 INCH GYPSUM BOARD – 2 LAYERS – LEVEL 4 FINISH
09 29 00.21	5/8 INCH GYPSUM BOARD – SAG-RESISTANT – LEVEL 4 FINISH
09 29 00.43	CORNER BEAD
09 29 00.44	J BEAD EDGE TRIM
09 29 00.99	GYPSUM BOARD SYSTEM – LEVEL 4 FINISH – REFER TO FLOOR PLANS AND WALL TYPES FOR COMPONENTS
09 30 19.02	PORCELAIN WALL TILE
09 30 19.41	THIN SET TILE SETTING BED
09 30 19.51	CEMENTITIOUS BACKING BOARD
09 30 19.61	ALUMINUM CORNER TRIM
09 91 00.01	PAINT – SEE SCHEDULE

90% CONSTRUCTION DOCUMENTS

NOT FOR CONSTRUCTION

NORTH ARROW

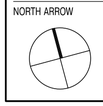

KEYPLAN

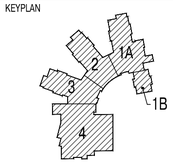

DRAWING NAME:

INTERIOR WINDOW DETAILS

DRAWN BY:	JMR
REVIEWED BY:	BPH
SCALE:	As Noted
JOB NO.:	1403.00
DATE:	July 25, 2016
DRAWING NUMBER:	A7.22

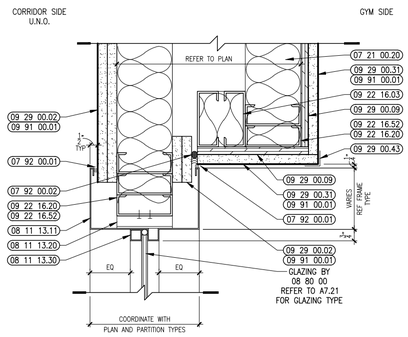

16 HOLLOW METAL JAMB DETAIL
3" = 1'-0"

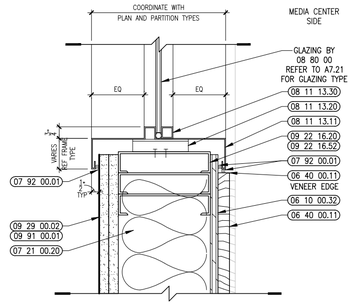

12 HOLLOW METAL JAMB DETAIL
3" = 1'-0"

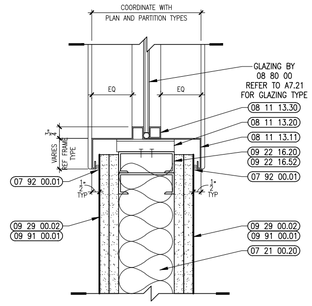

8 HOLLOW METAL JAMB DETAIL
3" = 1'-0"

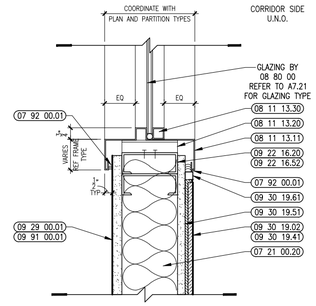

4 HOLLOW METAL JAMB DETAIL
3" = 1'-0"

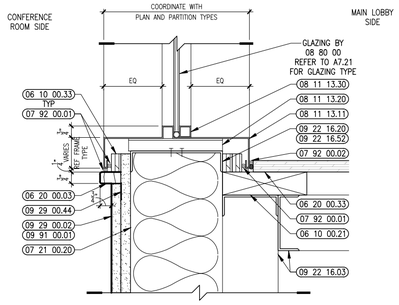

19 HOLLOW METAL SILL DETAIL
3" = 1'-0"

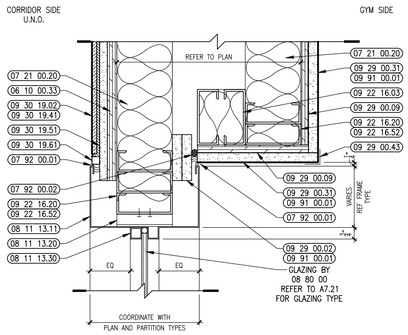

15 HOLLOW METAL JAMB DETAIL
3" = 1'-0"

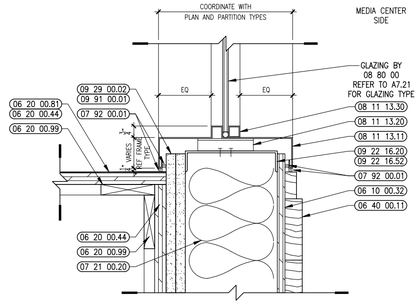

11 HOLLOW METAL SILL DETAIL
3" = 1'-0"

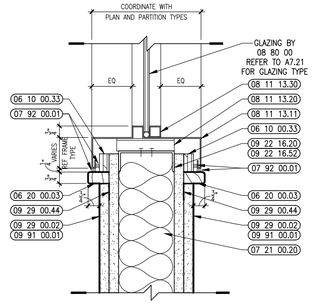

7 HOLLOW METAL SILL DETAIL
3" = 1'-0"

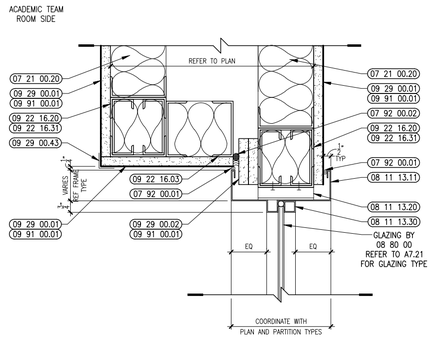

3 HOLLOW METAL HEAD DETAIL
3" = 1'-0"

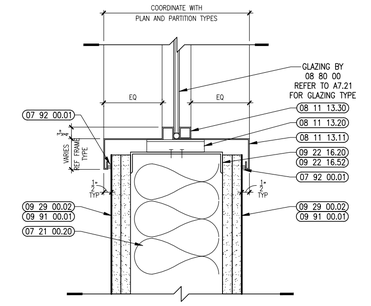

18 HOLLOW METAL SILL DETAIL
3" = 1'-0"

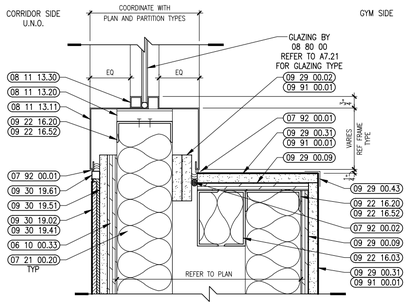

14 HOLLOW METAL SILL DETAIL
3" = 1'-0"

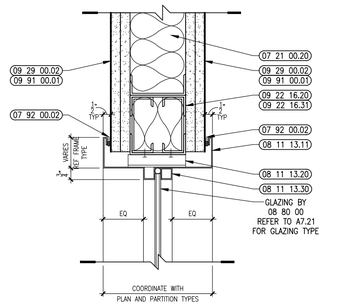

10 HOLLOW METAL HEAD DETAIL
3" = 1'-0"

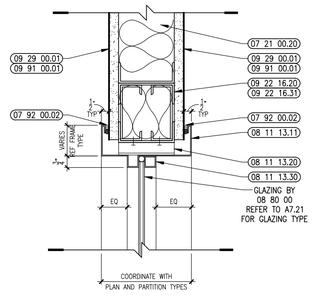

6 HOLLOW METAL HEAD DETAIL
3" = 1'-0"

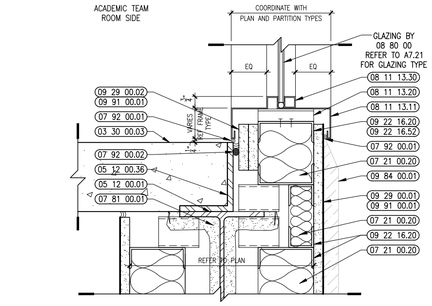

2 HOLLOW METAL SILL DETAIL
3" = 1'-0"

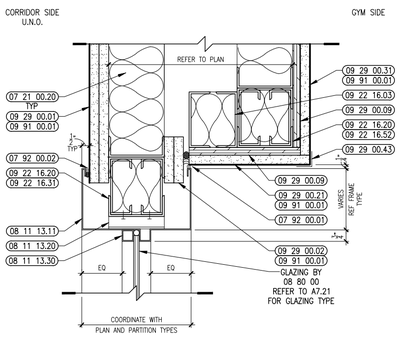

17 HOLLOW METAL HEAD DETAIL
3" = 1'-0"

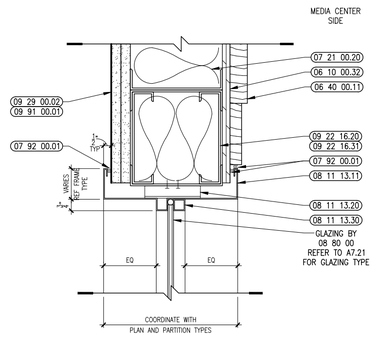

13 HOLLOW METAL HEAD DETAIL
3" = 1'-0"

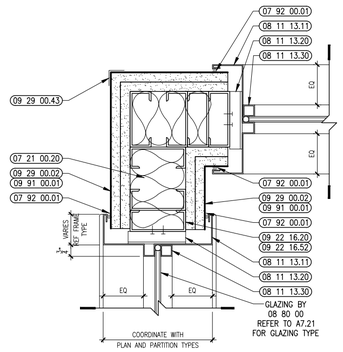

9 HOLLOW METAL JAMB DETAIL
3" = 1'-0"

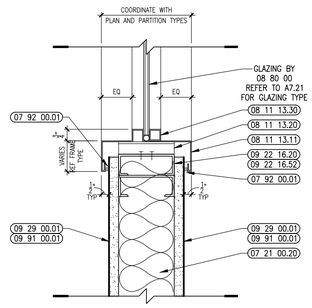

5 HOLLOW METAL JAMB DETAIL
3" = 1'-0"

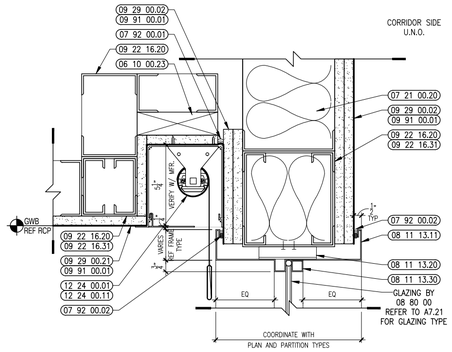

1 HOLLOW METAL HEAD DETAIL
3" = 1'-0"

A13 architects
526 Boston Post Rd Wayland, MA
508.358.0790 www.a13architects.com

BEVERLY MIDDLE SCHOOL

CABOT STREET
BEVERLY, MA 01915

Copyright © 2016 A13 Architects, LLC

KEYNOTE LEGEND: (REFERENCE SHEETS A0.01 & A0.02 FOR MASTER KEYNOTE LIST AND KEYNOTES NOT LISTED)

03 30 00.03	CONCRETE SLAB ON DECK – SEE STRUCTURAL
05 12 00.01	STEEL BEAM – SEE STRUCTURAL
05 12 00.36	STEEL PLATE BENT – SEE STRUCTURAL
06 10 00.21	WOOD BLOCKING – 2X FIRE RETARDANT TREATED – SIZE AS NOTED OR DRAWN
06 10 00.23	WOOD BLOCKING – FIRE RETARDANT TREATED – SIZE AS NOTED OR DRAWN
06 10 00.32	PLYWOOD – 1/2 INCH
06 10 00.33	PLYWOOD – 5/8 INCH
06 20 00.03	HARDWOOD TRIM – 3/4 INCH – PENCILED EDGE 1/8 INCH RADIUS – TRANSPARENT FINISH
06 20 00.33	HARDWOOD VENEER PLYWOOD – 3/4 INCH – TRANSPARENT FINISH
06 20 00.44	PLYWOOD – 3/4 INCH
06 20 00.81	PLASTIC LAMINATE COUNTER TOP
06 20 00.99	WOOD BLOCKING – SIZE AS REQUIRED
06 40 00.11	3D WOOD WALL PANELS – MAPLE
07 21 00.20	GLASS FIBER INSULATION
07 81 00.01	CEMENTITIOUS FIREPROOFING
07 92 00.01	JOINT SEALANT – TYPE AS REQUIRED
07 92 00.02	BACKER ROD AND SEALANT – TYPE AS REQUIRED
08 11 13.11	STEEL FRAME – SEE SCHEDULE FOR TYPES
08 11 13.20	STEEL FRAME CLIP BY FRAME INSTALLER
08 11 13.30	3/4" x 3/4" GLAZING STOP
09 22 16.03	METAL STUD 3-5/8 INCH – 16 INCHES O.C. MAX
09 22 16.20	METAL STUD – REFER TO FLOOR PLANS FOR DEPTH
09 22 16.31	BOXED HEADER
09 22 16.52	DOUBLE STUD JAMB – SIZE AS REQUIRED
09 29 00.01	5/8 INCH GYPSUM BOARD – LEVEL 4 FINISH
09 29 00.02	5/8 INCH GYPSUM BOARD – 2 LAYERS – LEVEL 4 FINISH
09 29 00.09	1/2 INCH PLYWOOD – FIRE RETARDANT TREATED
09 29 00.21	5/8 INCH GYPSUM BOARD – SAG-RESISTANT – LEVEL 4 FINISH
09 29 00.31	5/8 INCH GYPSUM BOARD – IMPACT RESISTANT – LEVEL 4 FINISH
09 29 00.43	CORNER BEAD
09 29 00.44	J BEAD EDGE TRIM
09 30 19.02	PORCELAIN WALL TILE
09 30 19.41	THIN SET TILE SETTING BED
09 30 19.51	CEMENTITIOUS BACKING BOARD
09 30 19.61	ALUMINUM CORNER TRIM
09 84 00.01	ACOUSTICAL PANEL – WALL MOUNTED – TYPE 1
09 91 00.01	PAINT – SEE SCHEDULE
12 24 00.01	ROLLER SHADE
12 24 00.11	BLACKOUT SHADE

90% CONSTRUCTION DOCUMENTS

NOT FOR CONSTRUCTION

NORTH ARROW

KEYPLAN

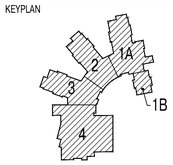

DRAWING NAME:

INTERIOR WINDOW DETAILS

DRAWN BY:	JMR
REVIEWED BY:	BPH
SCALE:	As Noted
JOB NO.:	1403.00
DATE:	July 25, 2016
DRAWING NUMBER:	A7.23

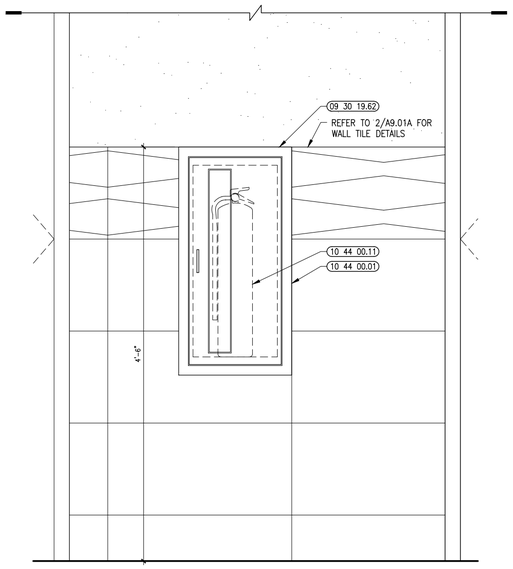

RECESSED CABINET
CORRIDOR INTERIOR ELEVATION

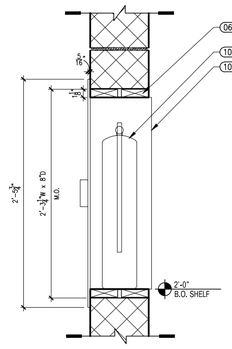

RECESSED CABINET
SECTION DETAIL @ CMU

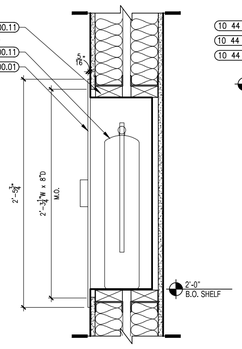

RECESSED CABINET
SECTION DETAIL @ METAL STUD

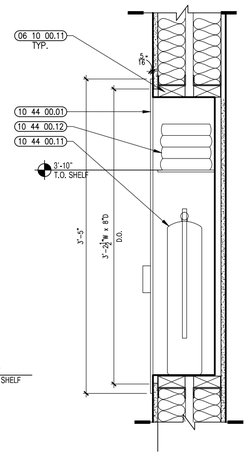

RECESSED CABINET WITH BLANKET
SECTION DETAIL @ METAL STUD

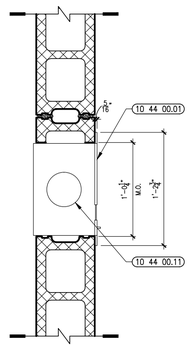

RECESSED CABINET
PLAN DETAIL @ CMU

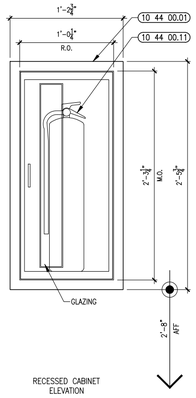

RECESSED CABINET
ELEVATION

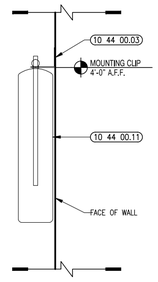

SECTION

2 FIRE EXTINGUISHER DETAILS
1-1/2" = 1'-0"

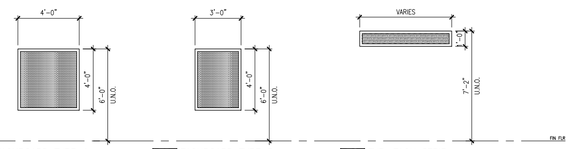

TB 4' TACKBOARD TYPE 4
TB 3' TACKBOARD TYPE 3
TS TYP. TACK STRIP

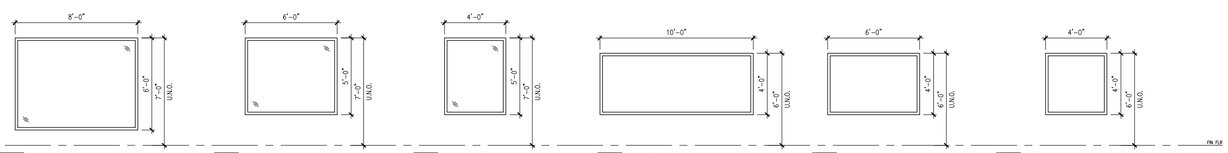

MIR 8' MIRROR TYPE 8
MIR 6' MIRROR TYPE 6
MIR 4' MIRROR TYPE 4
MB 10' MARKERBOARD TYPE 10
MB 6' MARKERBOARD TYPE 6
MB 4' MARKERBOARD TYPE 4

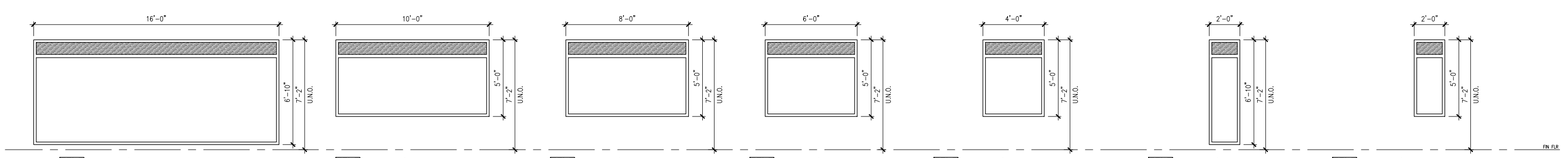

MT 16' MARKER/TACKBOARD TYPE 16B
MT 10' MARKER/TACKBOARD TYPE 10
MT 8' MARKER/TACKBOARD TYPE 8
MT 6' MARKER/TACKBOARD TYPE 6
MT 4' MARKER/TACKBOARD TYPE 4
MT 2'B MARKER/TACKBOARD TYPE 2B
MT 2'A MARKER/TACKBOARD TYPE 2A

1 MARKERBOARD/TACKBOARD TYPES
1/4" = 1'-0"

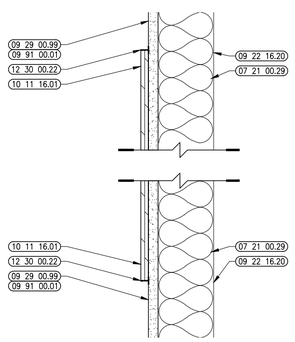

3 DRY MARKER BOARD EDGE DETAIL
3" = 1'-0"

526 Boston Post Rd Wayland, MA
508.358.0790 www.ai3architects.com

BEVERLY MIDDLE SCHOOL

CABOT STREET
BEVERLY, MA 01915

Copyright © 2016 AI3 Architects, LLC

KEYNOTE LEGEND: (REFERENCE SHEETS A0.01 & A0.02 FOR MASTER KEYNOTE LIST AND KEYNOTES NOT LISTED)

06 10 00.11	WOOD BLOCKING – 2X PRESSURE TREATED – SIZE AS NOTED OR DRAWN
07 21 00.29	GLASS FIBER ACOUSTICAL BLANKET INSULATION – MATCH DEPTH OF STUD – UNFACED
09 22 16.20	METAL STUD – REFER TO FLOOR PLANS FOR DEPTH
09 29 00.99	GYPSUM BOARD SYSTEM – LEVEL 4 FINISH – REFER TO FLOOR PLANS AND WALL TYPES FOR COMPONENTS
09 30 19.62	ALUMINUM CAP TRIM
09 91 00.01	HIGH PERFORMANCE COATING
10 11 16.01	DRY MARKER BOARD
10 44 00.01	FIRE EXTINGUISHER CABINET – FULLY RECESSED
10 44 00.03	FIRE EXTINGUISHER WALL MOUNTED BRACKET
10 44 00.11	FIRE EXTINGUISHER
10 44 00.12	FIRE BLANKET
12 30 00.22	PVC EDGE BANDING

GENERAL NOTES:
1. G.C. TO COORDINATE ALL DIMENSIONS WITH F.E. CABINET MANUFACTURER (TYPICAL).
2. REFER TO SHEET A0.XX FOR PARTITION TYPES.

90% CONSTRUCTION DOCUMENTS

NOT FOR CONSTRUCTION

NORTH ARROW

KEYPLAN

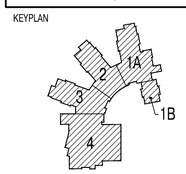

DRAWING NAME:
MARKERBOARD AND TACKBOARD TYPES

DRAWN BY: JMR
REVIEWED BY: BPH
SCALE: As Noted
JOB NO.: 1403.00
DATE: July 25, 2016
DRAWING NUMBER: A7.31

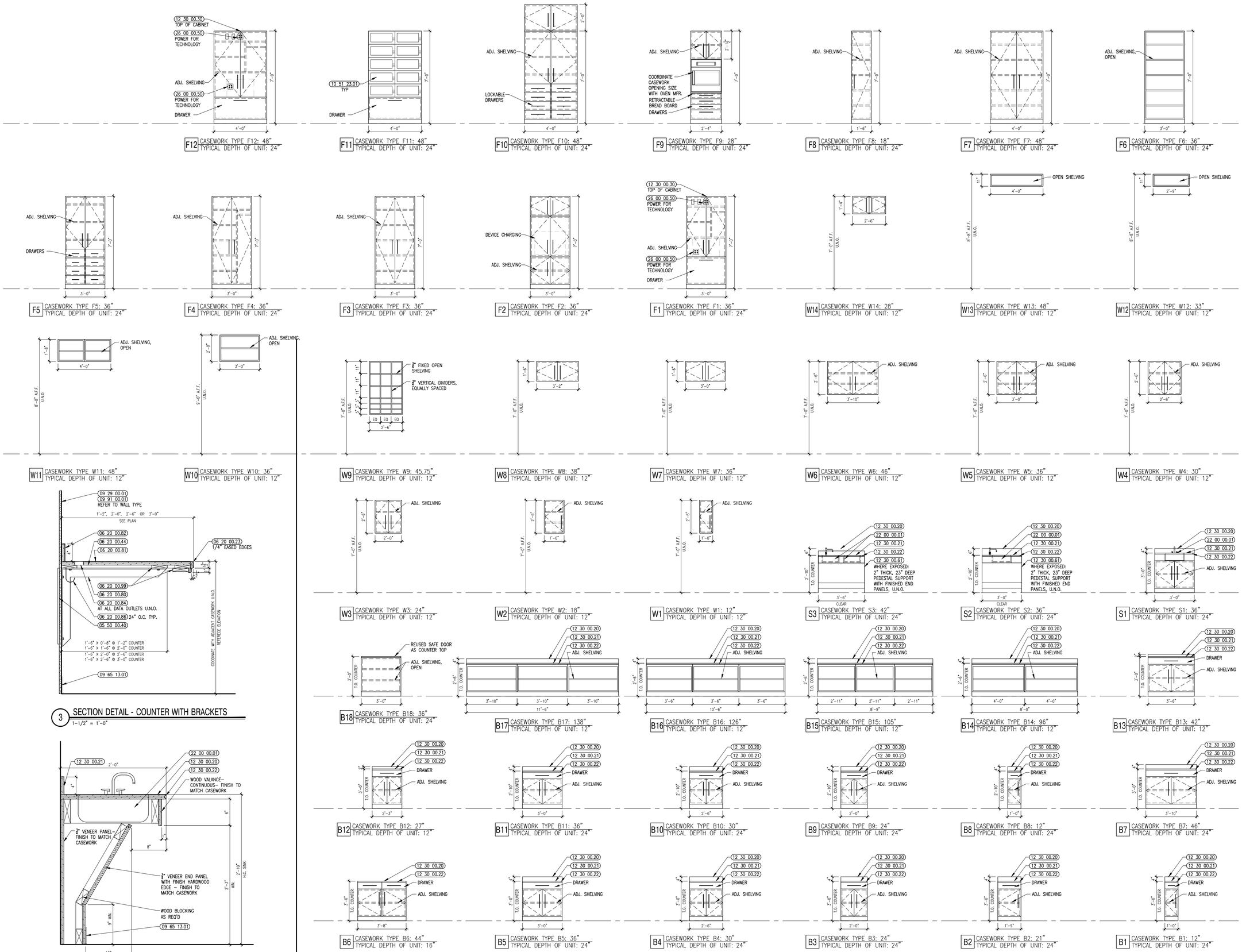

526 Boston Post Rd Wayland, MA
508.358.0790 www.ai3architects.com

BEVERLY MIDDLE SCHOOL

CABOT STREET
BEVERLY, MA 01915

Copyright © 2016 AI3 Architects, LLC

KEYNOTE LEGEND: (REFERENCE SHEETS A0.01 & A0.02 FOR MASTER KEYNOTE LIST AND KEYNOTES NOT LISTED)

05 50 00.40	STEEL PLATE – 20 GAGE – SECURE TO EACH STUD
06 20 00.23	HARDWOOD TRIM – 3/4 INCH – TRANSPARENT FINISH
06 20 00.44	PLYWOOD – 3/4 INCH
06 20 00.80	STEEL UNDER COUNTER SUPPORT BRACKET – SIZE AS NOTED OR DRAWN
06 20 00.81	PLASTIC LAMINATE COUNTER TOP
06 20 00.82	PLASTIC LAMINATE BACKSPLASH – 4 INCH
06 20 00.84	GROMMET – 3 INCH – PLASTIC
06 20 00.86	WIRE MANAGEMENT HOOKS ?12 INCHES O.C. ?UNDER COUNTER
06 20 00.99	WOOD BLOCKING – SIZE AS REQUIRED
09 29 00.01	5/8 INCH GYPSUM BOARD – LEVEL 4 FINISH
09 65 13.01	RUBBER BASE – 4"
09 91 00.01	PAINT – SEE SCHEDULE
10 51 23.01	PHENOLIC LOCKER – RECESSED – TYPE 1
12 30 00.20	PLASTIC LAMINATE COUNTERTOP
12 30 00.21	PLASTIC LAMINATE BACKSPLASH – 4 INCH
12 30 00.22	PVC EDGE BANDING
12 30 00.30	GROMMET – 3 INCH – PLASTIC
12 30 00.61	WOOD END PANEL – FINISH TO MATCH CASEWORK
22 00 00.01	SINK – SEE PLUMBING
26 00 00.50	ELECTRICAL OUTLET – SEE ELECTRICAL

90% CONSTRUCTION DOCUMENTS

NOT FOR CONSTRUCTION

NORTH ARROW

KEYPLAN

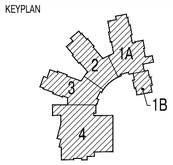

DRAWING NAME:

TYPICAL CLASSROOM CASEWORK TYPES

DRAWN BY:	JMR
REVIEWED BY:	BPH
SCALE:	As Noted
JOB NO.:	1403.00
DATE:	July 25, 2016
DRAWING NUMBER:	A7.32

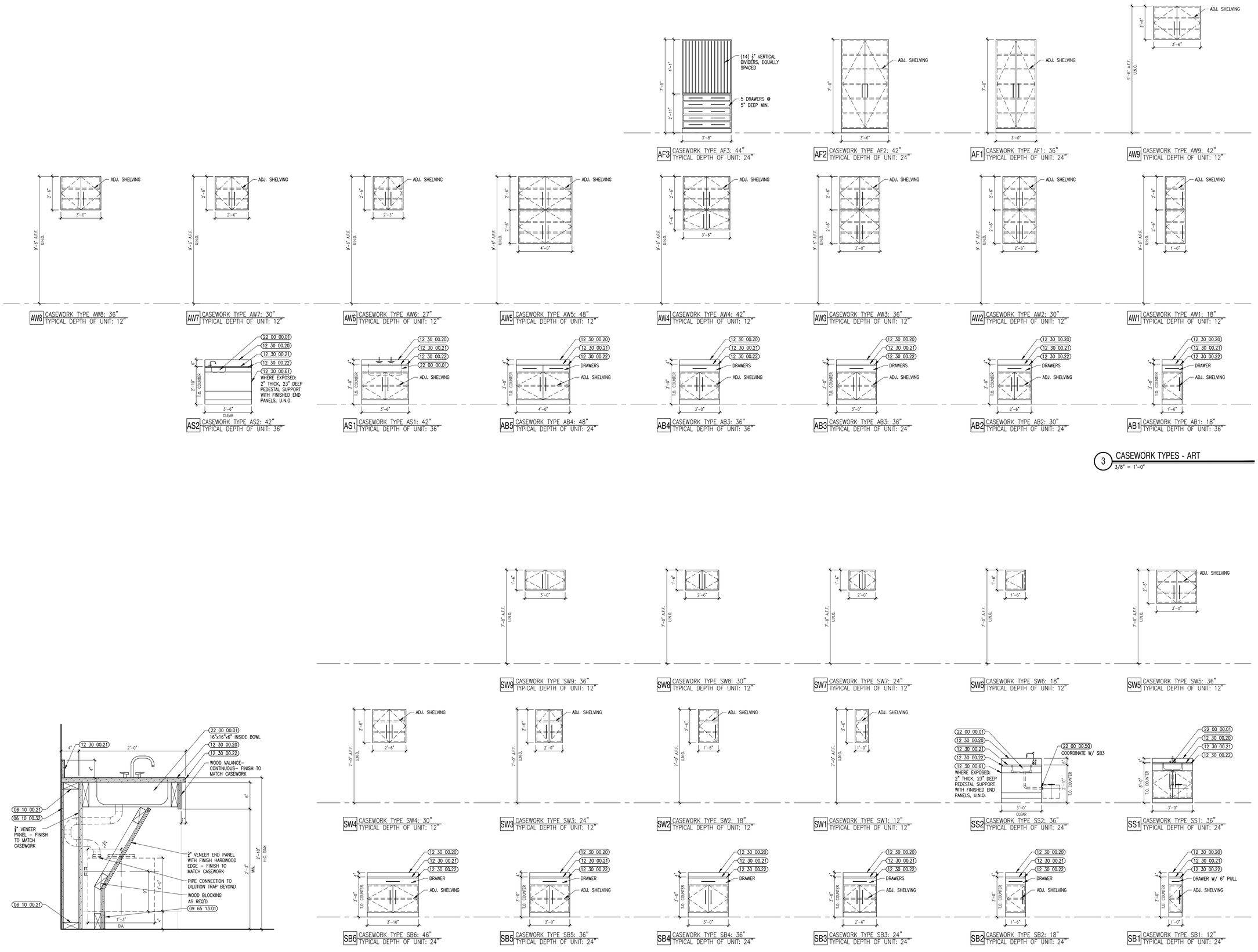

526 Boston Post Rd Wayland, MA
508.358.0790 www.ai3architects.com

BEVERLY MIDDLE SCHOOL

CABOT STREET
BEVERLY, MA 01915

Copyright © 2016 Ai3 Architects, LLC

KEYNOTE LEGEND: (REFERENCE SHEETS A0.01 & A0.02 FOR MASTER KEYNOTE LIST AND KEYNOTES NOT LISTED)

06 10 00.21	WOOD BLOCKING - 2X FIRE RETARDANT TREATED - SIZE AS NOTED OR DRAWN
06 10 00.32	PLYWOOD - 1/2 INCH
09 65 13.01	RUBBER BASE - 4"
12 30 00.20	PLASTIC LAMINATE COUNTERTOP
12 30 00.21	PLASTIC LAMINATE BACKSPLASH - 4 INCH
12 30 00.22	PVC EDGE BANDING
12 30 00.61	WOOD END PANEL - FINISH TO MATCH CASEWORK
22 00 00.01	SINK - SEE PLUMBING
22 00 00.50	PIPE PENETRATION - SEE PLUMBING

90% CONSTRUCTION DOCUMENTS

NOT FOR CONSTRUCTION

NORTH ARROW

KEYPLAN

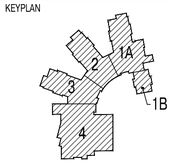

DRAWING NAME:

ART & SCIENCE CASEWORK TYPES

DRAWN BY:	JMR
REVIEWED BY:	BPH
SCALE:	As Noted
JOB NO.:	1403.00
DATE:	July 25, 2016
DRAWING NUMBER:	A7.33

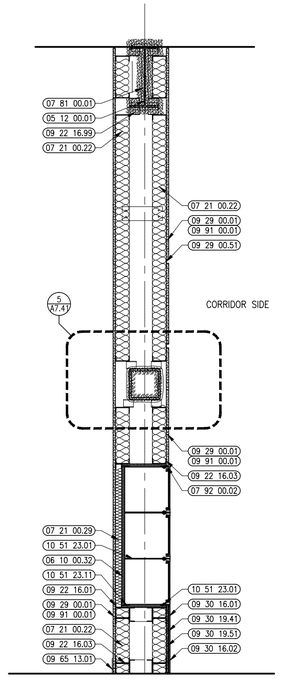

4 CLASSROOM CORRIDOR LOCKER SECTION
3/4" = 1'-0"

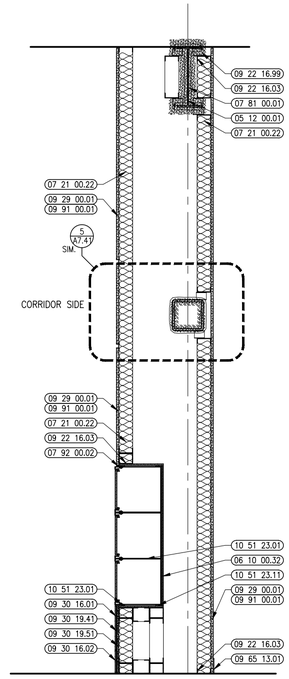

2 CLASSROOM CORRIDOR LOCKER SECTION
3/4" = 1'-0"

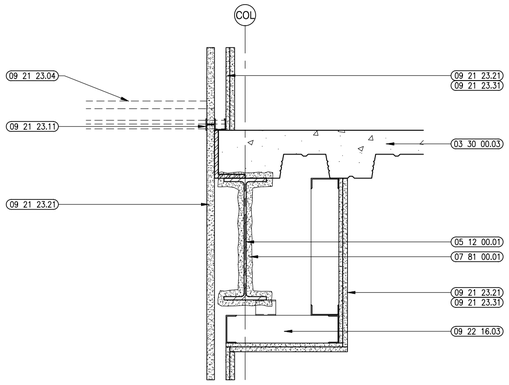

6 VERTICAL DETAIL @ SHAFT WALL
1-1/2" = 1'-0"

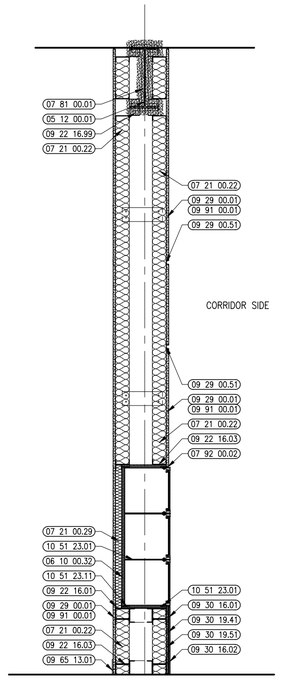

3 CLASSROOM CORRIDOR LOCKER SECTION
3/4" = 1'-0"

1 CLASSROOM CORRIDOR LOCKER SECTION
3/4" = 1'-0"

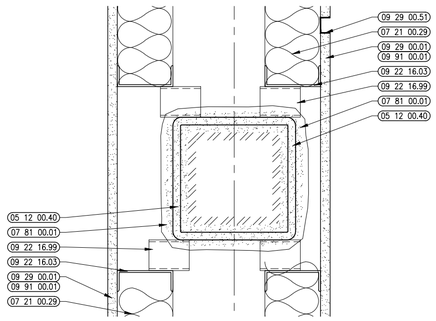

5 TYPICAL DETAIL @ BRACE IN WALL
3" = 1'-0"

Ai3 architects
526 Boston Post Rd Wayland, MA
508.358.0790 www.ai3architects.com

BEVERLY MIDDLE SCHOOL

CABOT STREET
BEVERLY, MA 01915

Copyright © 2016 Ai3 Architects, LLC

KEYNOTE LEGEND: (REFERENCE SHEETS A0.01 & A0.02 FOR MASTER KEYNOTE LIST AND KEYNOTES NOT LISTED)

03 30 00.03	CONCRETE SLAB ON DECK – SEE STRUCTURAL
05 12 00.01	STEEL BEAM – SEE STRUCTURAL
05 12 00.40	BRACE FRAME – SEE STRUCTURAL
06 10 00.32	PLYWOOD – 1/2 INCH
07 21 00.22	GLASS FIBER ACOUSTICAL BLANKET INSULATION – 3 1/2 INCH – UNFACED
07 21 00.29	GLASS FIBER ACOUSTICAL BLANKET INSULATION – MATCH DEPTH OF STUD – UNFACED
07 81 00.01	CEMENTITIOUS FIREPROOFING
07 92 00.02	BACKER ROD AND SEALANT – TYPE AS REQUIRED
09 21 23.04	HORIZONTAL SHAFT ENCLOSURE – 2 HR RATING
09 21 23.11	METAL SHAFTWALL C-H STUD – 2 1/2 INCH – 24 INCHES O.C. MAX
09 21 23.21	GYPSUM SHAFTWALL LINER PANEL – 1 INCH
09 21 23.31	GYPSUM BOARD – 5/8 INCH TYPE "X" – 1 LAYER
09 22 16.01	METAL STUD 1-5/8 INCH – 16 INCHES O.C. MAX
09 22 16.03	METAL STUD 3-5/8 INCH – 16 INCHES O.C. MAX
09 22 16.99	METAL CLIP FOR WALL FRAMING – 16 GA. – 24 INCHES O.C. MAX
09 29 00.01	5/8 INCH GYPSUM BOARD – LEVEL 4 FINISH
09 29 00.51	ALUMINUM REVEAL TRIM – SATIN FINISH – 1 INCH
09 30 16.01	QUARRY TILE
09 30 16.02	QUARRY TILE BASE
09 30 19.41	THIN SET TILE SETTING BED
09 30 19.51	CEMENTITIOUS BACKING BOARD
09 65 13.01	RUBBER BASE – 4"
09 91 00.01	PAINT – SEE SCHEDULE
10 51 23.01	PHENOLIC LOCKER – RECESSED – TYPE 1
10 51 23.11	SHIM

90% CONSTRUCTION DOCUMENTS

NOT FOR CONSTRUCTION

NORTH ARROW

KEYPLAN

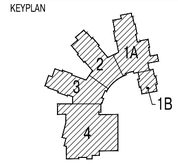

DRAWING NAME:

INTERIOR WALL SECTIONS AND DETAILS

DRAWN BY:	MJR
REVIEWED BY:	BPH
SCALE: As Noted	DRAWING NUMBER:
JOB NO.: 1403.00	A7.41
DATE: July 25, 2016	

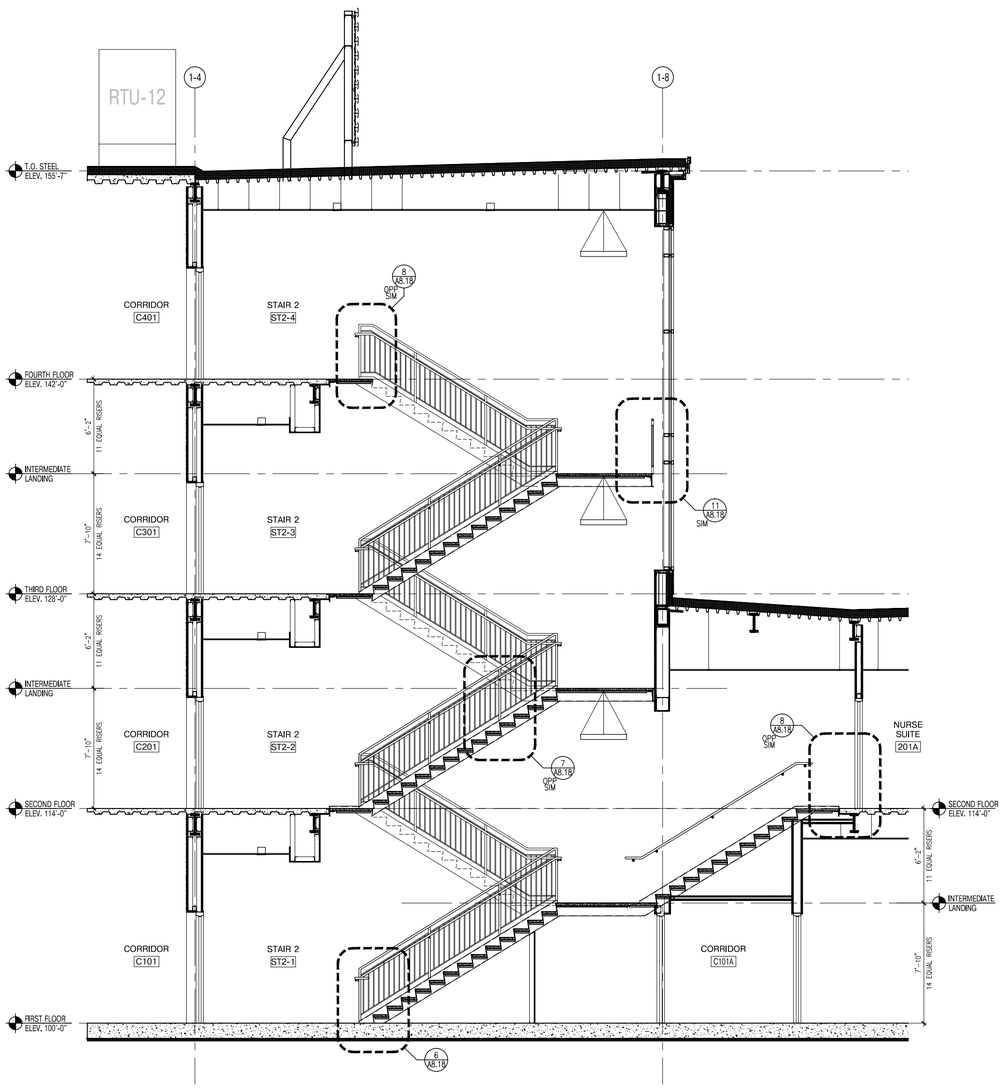

5 STAIR 2 ENLARGED SECTION
1/4" = 1'-0"

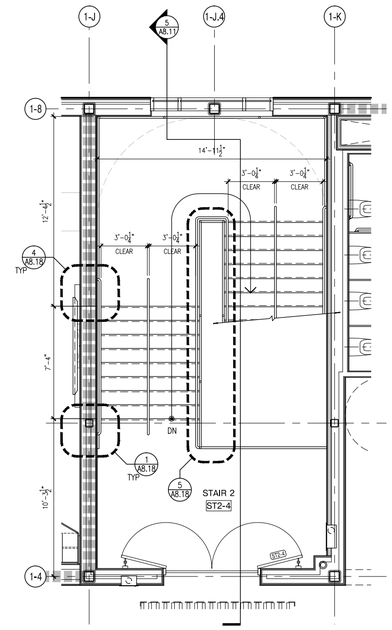

4 STAIR 2 ENLARGED PLAN
1/4" = 1'-0"
FOURTH FLOOR

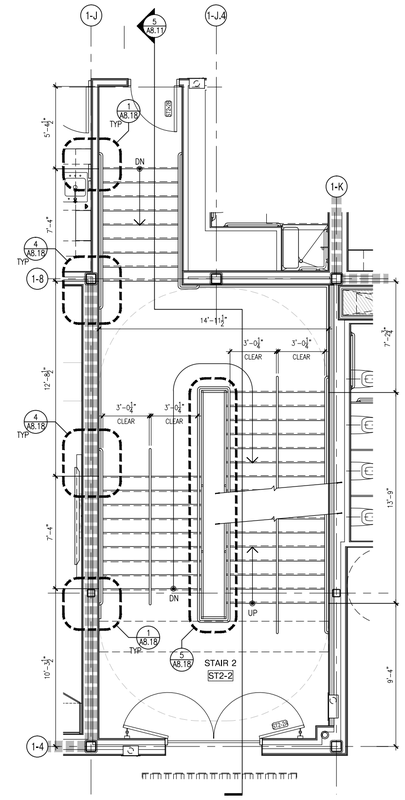

2 STAIR 2 ENLARGED PLAN
1/4" = 1'-0"
SECOND FLOOR

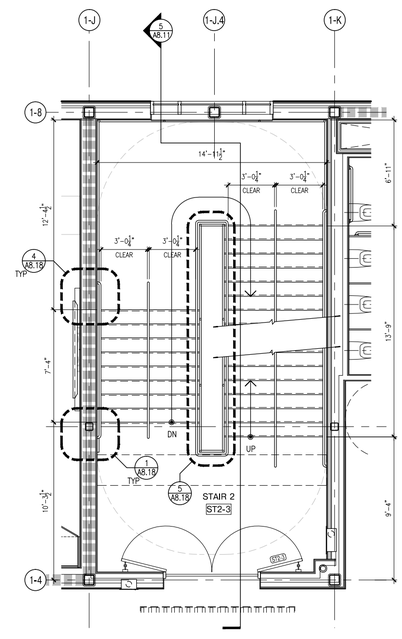

3 STAIR 2 ENLARGED PLAN
1/4" = 1'-0"
THIRD FLOOR

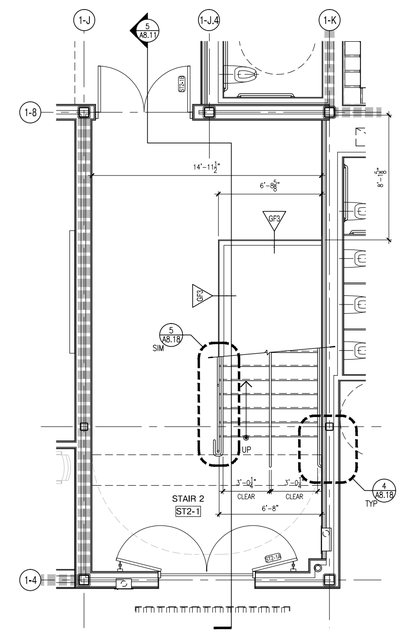

1 STAIR 2 ENLARGED PLAN
1/4" = 1'-0"
FIRST FLOOR

A13 architects
526 Boston Post Rd Wayland, MA
508.358.0790 www.a13architects.com

BEVERLY MIDDLE SCHOOL

CABOT STREET
BEVERLY, MA 01915

KEYNOTE LEGEND: (REFERENCE SHEETS A0.01 & A0.02 FOR MASTER KEYNOTE LIST AND KEYNOTES NOT LISTED)

90% CONSTRUCTION DOCUMENTS

NOT FOR CONSTRUCTION

NORTH ARROW

KEYPLAN

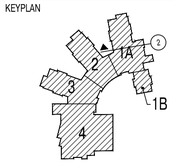

DRAWING NAME:
STAIR 2 ENLARGED STAIR PLANS & SECTIONS

DRAWN BY:	RPM / JEQ
REVIEWED BY:	CLO
SCALE:	As Noted
JOB NO.:	1403.00
DATE:	July 25, 2016
DRAWING NUMBER:	A8.11

Copyright © 2016 A13 Architects, LLC

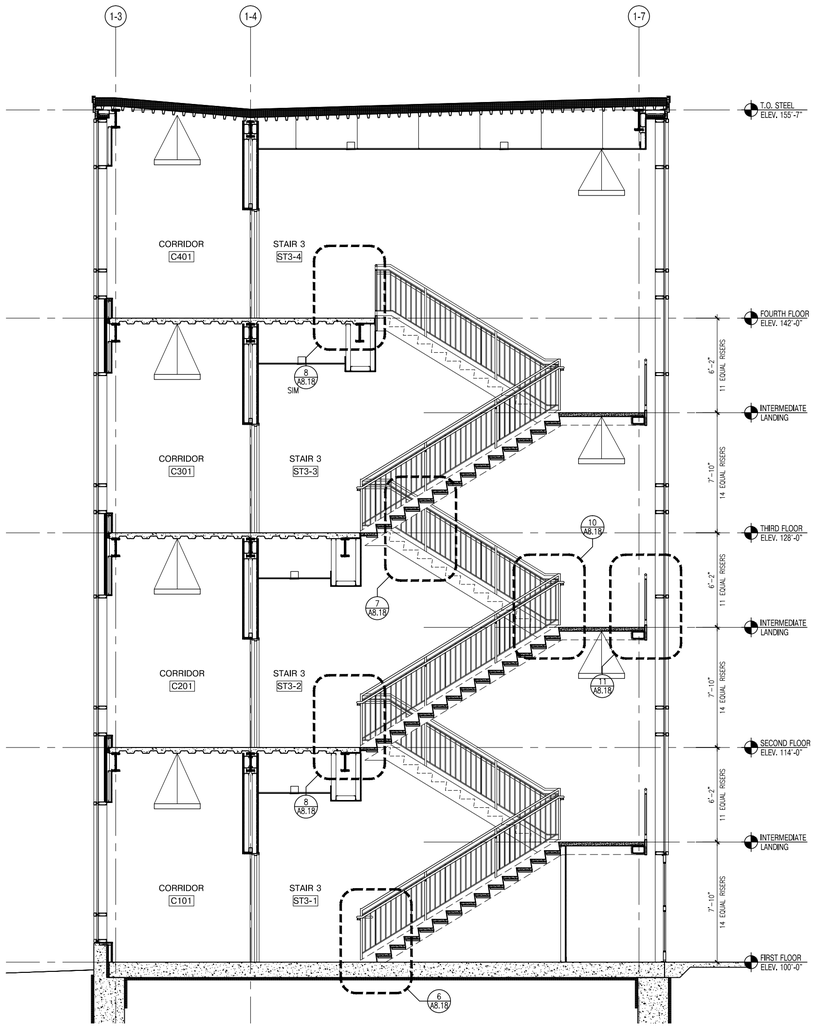

5 STAIR 3 ENLARGED SECTION
1/4" = 1'-0"

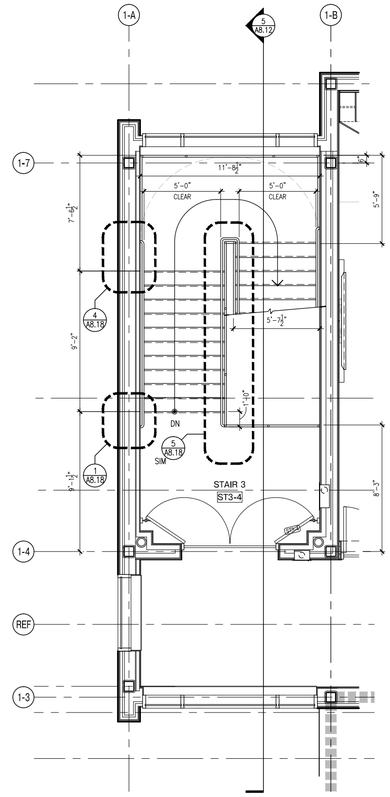

4 STAIR 3 ENLARGED PLAN
1/4" = 1'-0"
FOURTH FLOOR

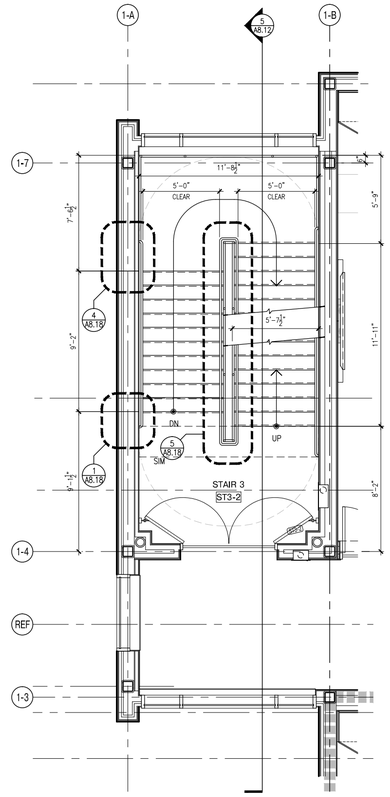

2 STAIR 3 ENLARGED PLAN
1/4" = 1'-0"
SECOND FLOOR

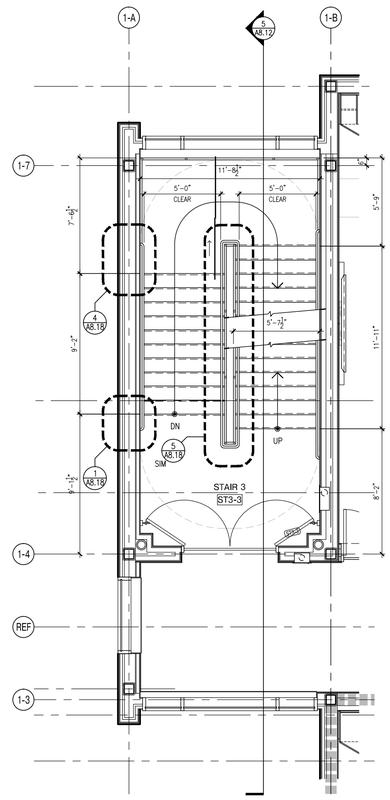

3 STAIR 3 ENLARGED PLAN
1/4" = 1'-0"
THIRD FLOOR

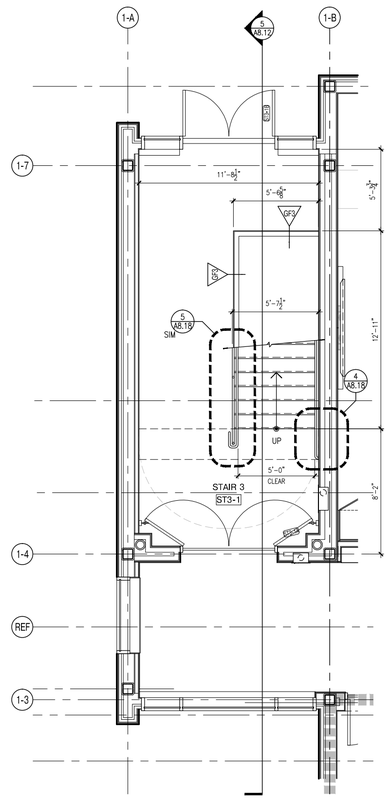

1 STAIR 3 ENLARGED PLAN
1/4" = 1'-0"
FIRST FLOOR

A13 architects
526 Boston Post Rd Wayland, MA
508.358.0790 www.a13architects.com

BEVERLY MIDDLE SCHOOL

CABOT STREET
BEVERLY, MA 01915

KEYNOTE LEGEND: (REFERENCE SHEETS A0.01 & A0.02 FOR MASTER KEYNOTE LIST AND KEYNOTES NOT LISTED)

Copyright © 2016 A13 Architects, LLC

90% CONSTRUCTION DOCUMENTS

NOT FOR CONSTRUCTION

NORTH ARROW

KEYPLAN

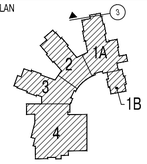

DRAWING NAME:

STAIR 3 ENLARGED STAIR PLANS & SECTIONS

DRAWN BY:	RPM / JEQ
REVIEWED BY:	CLQ
SCALE:	As Noted
JOB NO.:	1403.00
DATE:	July 25, 2016
DRAWING NUMBER:	A8.12

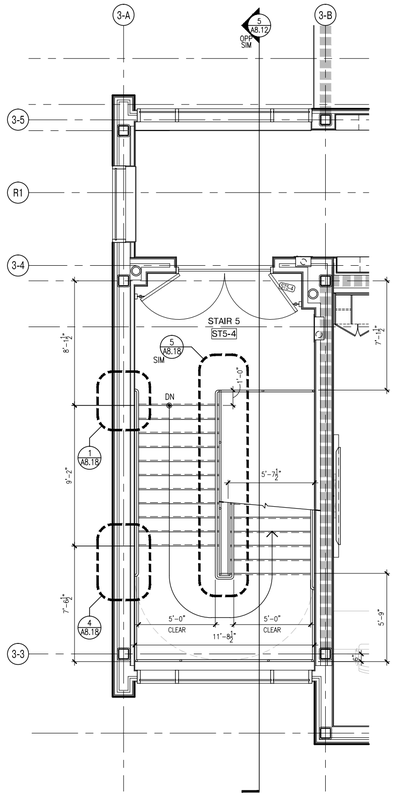

8 STAIR 5 ENLARGED PLAN
1/4" = 1'-0" SECOND FLOOR

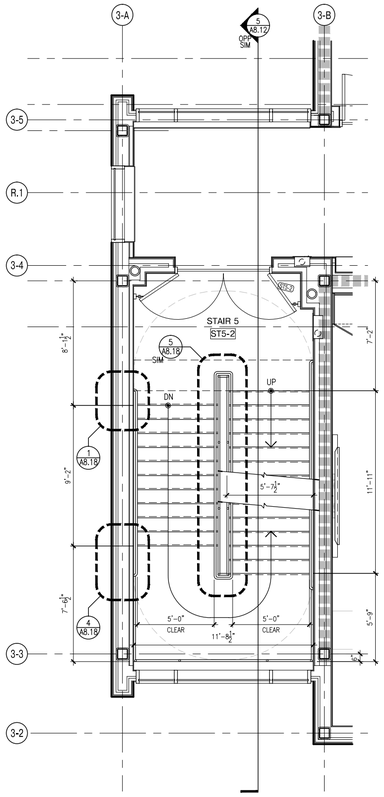

6 STAIR 5 ENLARGED PLAN
1/4" = 1'-0" SECOND FLOOR

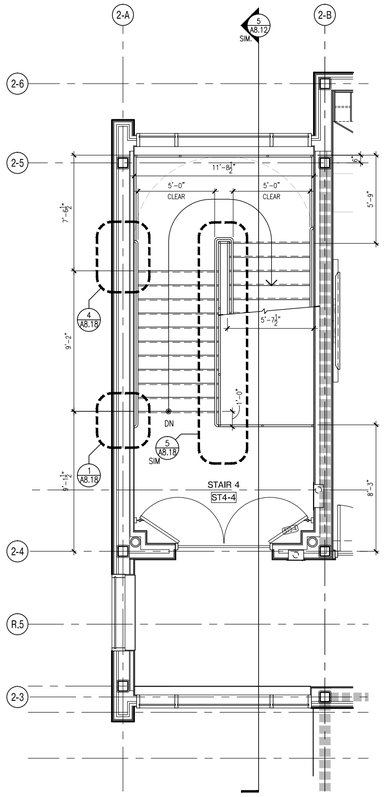

4 STAIR 4 ENLARGED PLAN
1/4" = 1'-0" FOURTH FLOOR

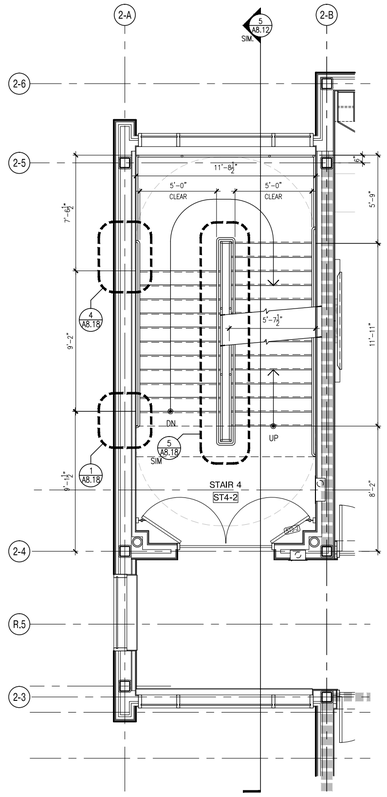

2 STAIR 4 ENLARGED PLAN
1/4" = 1'-0" SECOND FLOOR

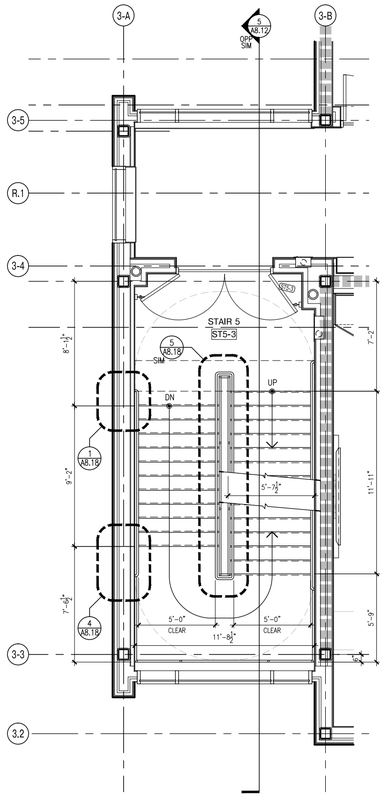

7 STAIR 5 ENLARGED PLAN
1/4" = 1'-0" FIRST FLOOR

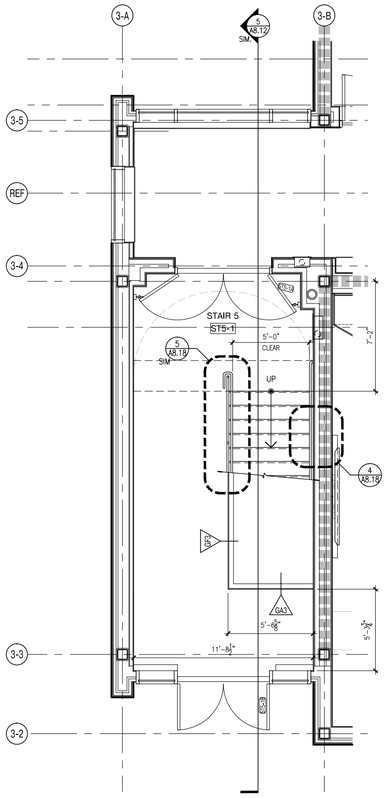

5 STAIR 5 ENLARGED PLAN
1/4" = 1'-0" FIRST FLOOR

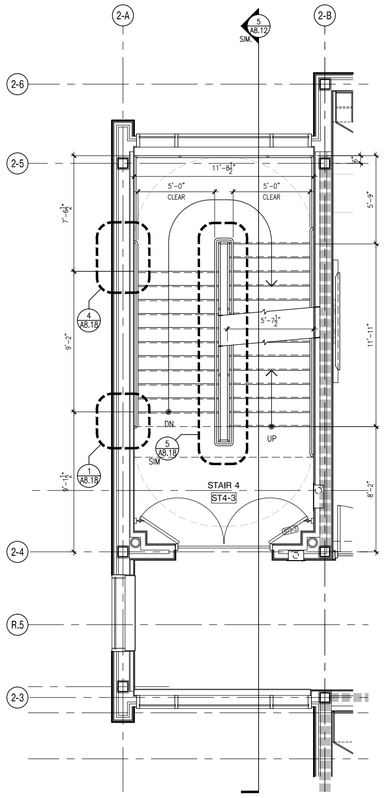

3 STAIR 4 ENLARGED PLAN
1/4" = 1'-0" THIRD FLOOR

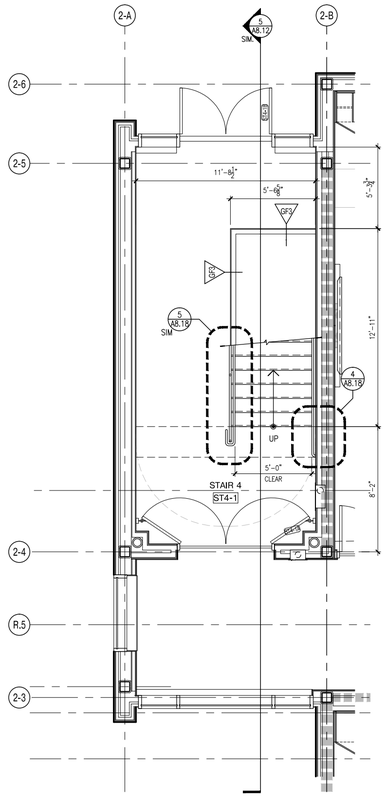

1 STAIR 4 ENLARGED PLAN
1/4" = 1'-0" FIRST FLOOR

A13 architects
526 Boston Post Rd Wayland, MA
508.358.0790 www.a13architects.com

BEVERLY MIDDLE SCHOOL

CABOT STREET
BEVERLY, MA 01915

Copyright © 2016 A13 Architects, LLC

KEYNOTE LEGEND: (REFERENCE SHEETS A0.01 & A0.02 FOR MASTER KEYNOTE LIST AND KEYNOTES NOT LISTED)

90% CONSTRUCTION DOCUMENTS

NOT FOR CONSTRUCTION

NORTH ARROW

KEYPLAN

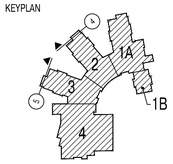

DRAWING NAME:

STAIR 4 & 5 ENLARGED PLANS

DRAWN BY:	RPM / JEQ
REVIEWED BY:	CLO
SCALE:	As Noted
JOB NO.:	1403.00
DATE:	July 25, 2016
DRAWING NUMBER:	A8.13

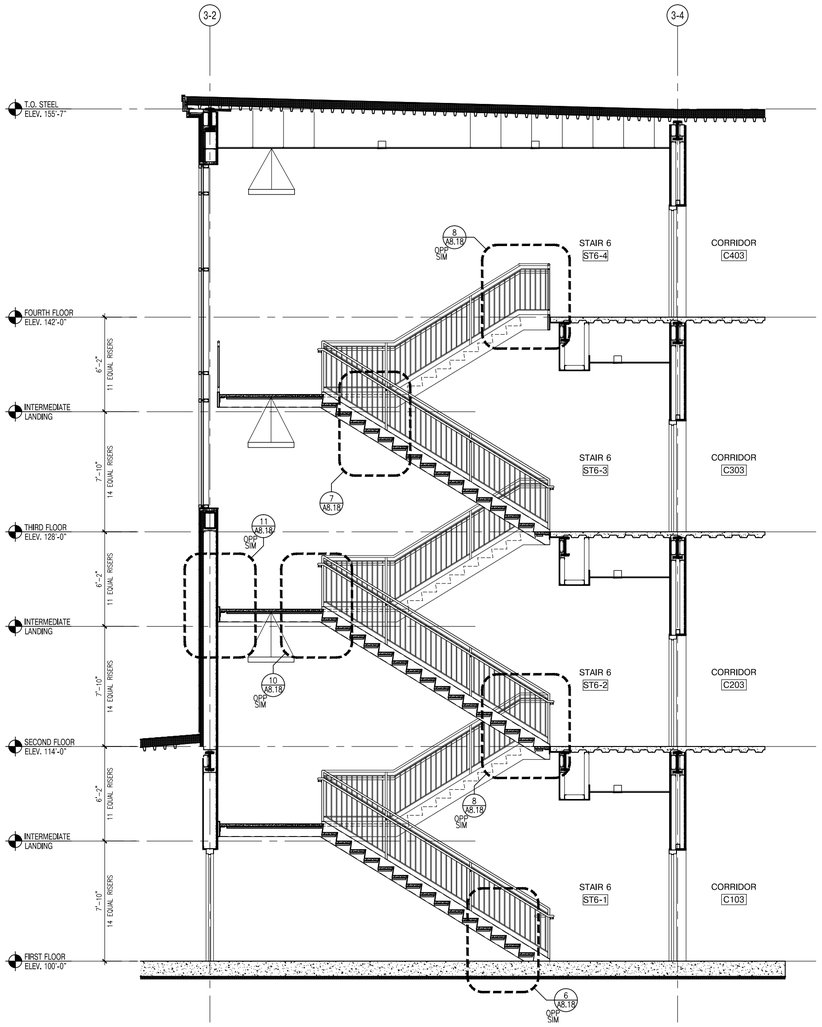

3 STAIR 6 ENLARGED SECTION
1/4" = 1'-0"

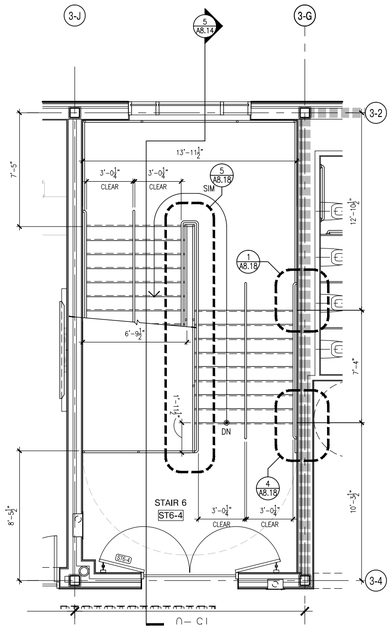

4 STAIR 6 ENLARGED PLAN
1/4" = 1'-0"
FOURTH FLOOR

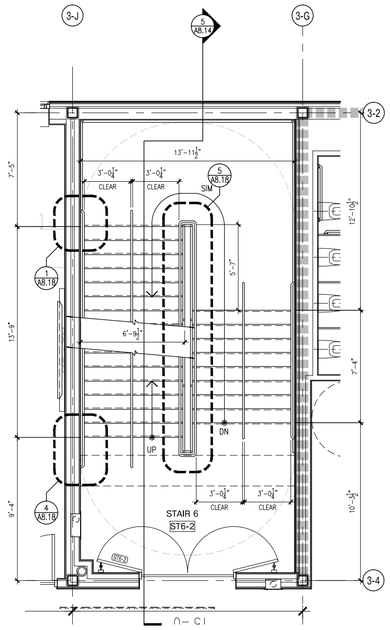

2 STAIR 6 ENLARGED PLAN
1/4" = 1'-0"
SECOND FLOOR

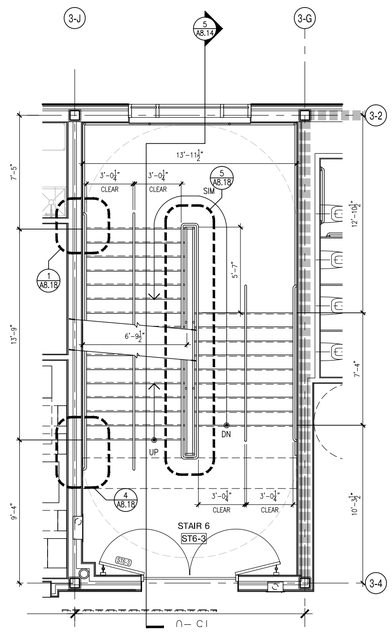

3 STAIR 6 ENLARGED PLAN
1/4" = 1'-0"
THIRD FLOOR

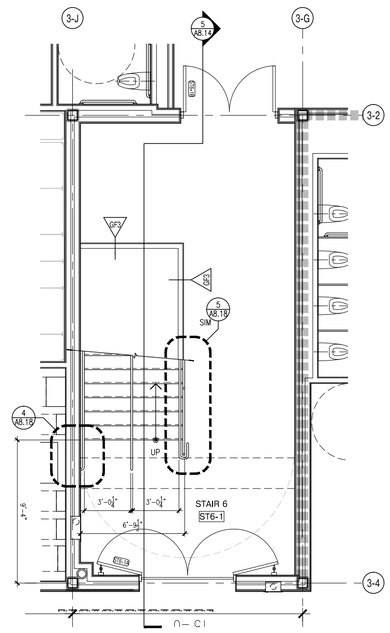

1 STAIR 6 ENLARGED PLAN
1/4" = 1'-0"
FIRST FLOOR

A13 architects
526 Boston Post Rd Wayland, MA
508.358.0790 www.a13architects.com

BEVERLY MIDDLE SCHOOL

CABOT STREET
BEVERLY, MA 01915

KEYNOTE LEGEND: (REFERENCE SHEETS A0.01 & A0.02 FOR MASTER KEYNOTE LIST AND KEYNOTES NOT LISTED)

90% CONSTRUCTION DOCUMENTS

NOT FOR CONSTRUCTION

NORTH ARROW

KEYPLAN

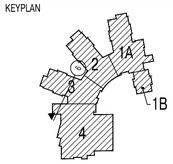

DRAWING NAME:

STAIR 6 ENLARGED PLANS & SECTIONS

DRAWN BY: RPM \ JEQ
REVIEWED BY: CLO
SCALE: As Noted
JOB NO.: 1403.00
DATE: July 25, 2016
DRAWING NUMBER: A8.14

Copyright © 2016 A13 Architects, LLC

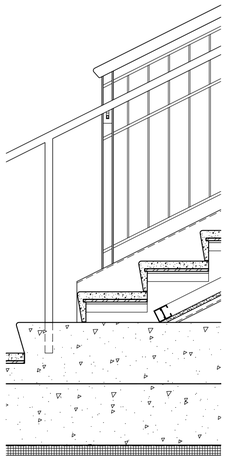

8 STAIR 1 & 7 DETAIL
1" = 1'-0"

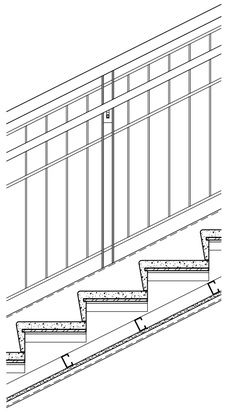

9 STAIR 1 & 7 DETAIL
1" = 1'-0"

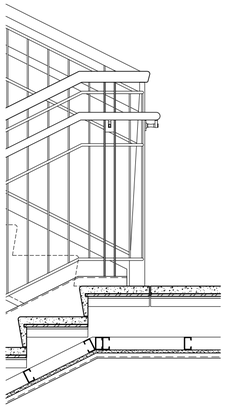

10 STAIR 1 & 7 DETAIL
1" = 1'-0"

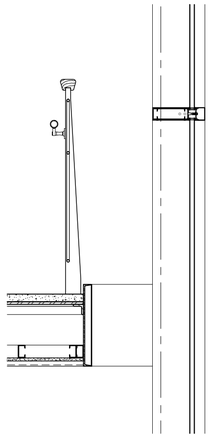

11 STAIR 1 & 7 DETAIL
1" = 1'-0"

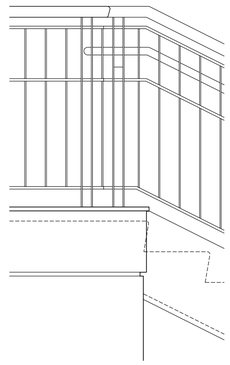

12 STAIR 1 & 7 DETAIL
1" = 1'-0"

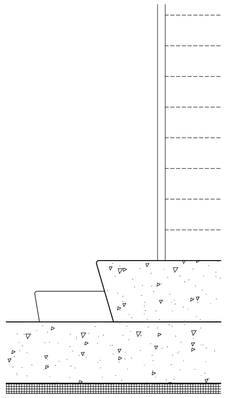

7 STAIR 1 & 7 DETAIL
1" = 1'-0"

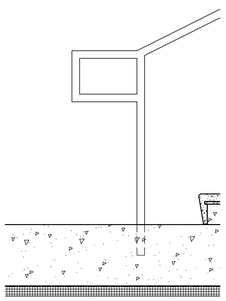

6 STAIR 1 & 7 DETAIL
1" = 1'-0"

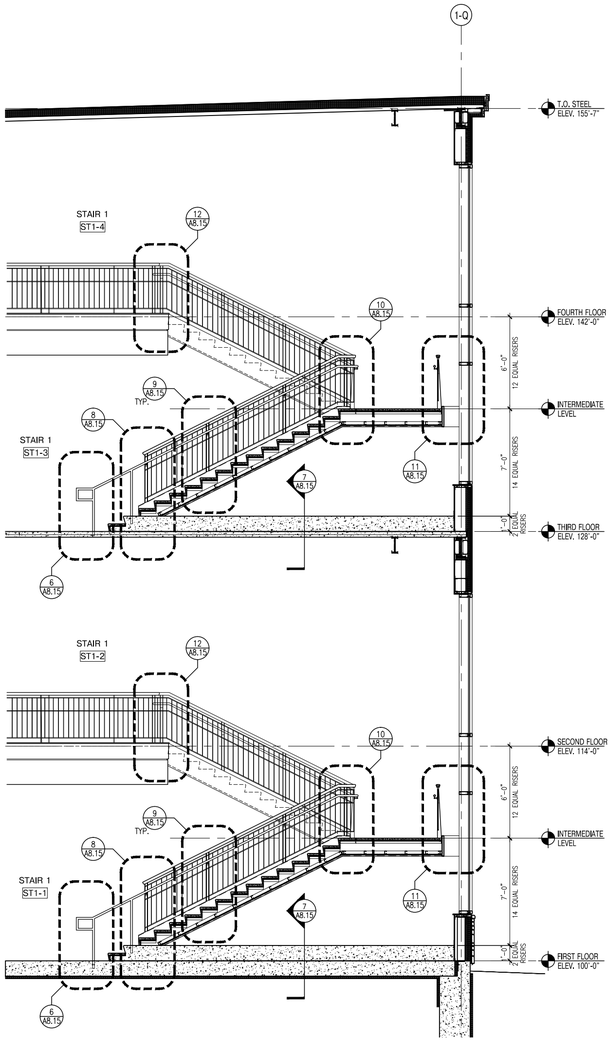

5 STAIR 1 & 7 TYP. ENLARGED SECTION
1/4" = 1'-0"

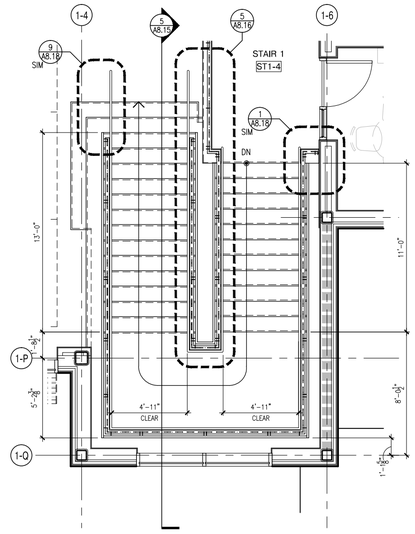

4 STAIR 1 & 7 TYP. ENLARGED PLAN
1/4" = 1'-0"
FOURTH FLOOR

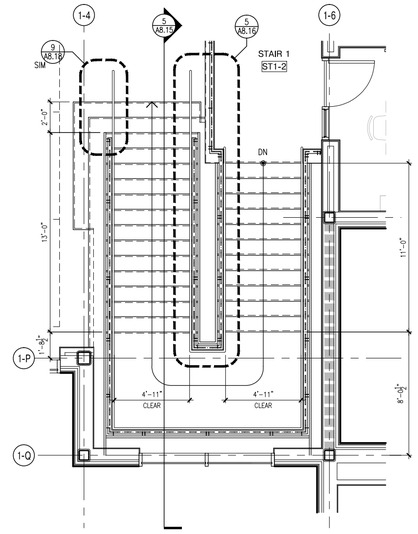

2 STAIR 1 & 7 TYP. ENLARGED PLAN
1/4" = 1'-0"
SECOND FLOOR

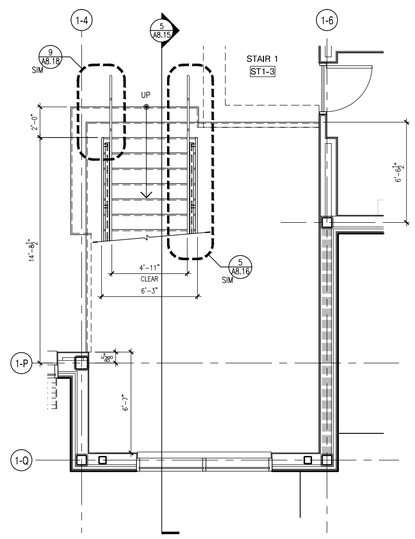

3 STAIR 1 & 7 TYP. ENLARGED PLAN
1/4" = 1'-0"
THIRD FLOOR

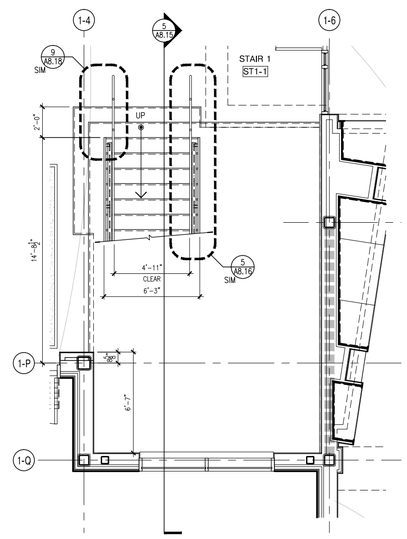

1 STAIR 1 & 7 TYP. ENLARGED PLAN
1/4" = 1'-0"
FIRST FLOOR

A13 architects
526 Boston Post Rd Wayland, MA
508.358.0790 www.a13architects.com

BEVERLY MIDDLE SCHOOL

CABOT STREET
BEVERLY, MA 01915

Copyright © 2016 A13 Architects, LLC

KEYNOTE LEGEND: (REFERENCE SHEETS A0.01 & A0.02 FOR MASTER KEYNOTE LIST AND KEYNOTES NOT LISTED)

90% CONSTRUCTION DOCUMENTS

NOT FOR CONSTRUCTION

NORTH ARROW

KEYPLAN

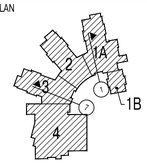

DRAWING NAME:
STAIR 1 & 7 ENLARGED PLANS & SECTIONS

DRAWN BY: RPM / JEQ
REVIEWED BY: CLO
SCALE: As Noted
JOB NO.: 1403.00
DATE: July 25, 2016
DRAWING NUMBER: A8.15

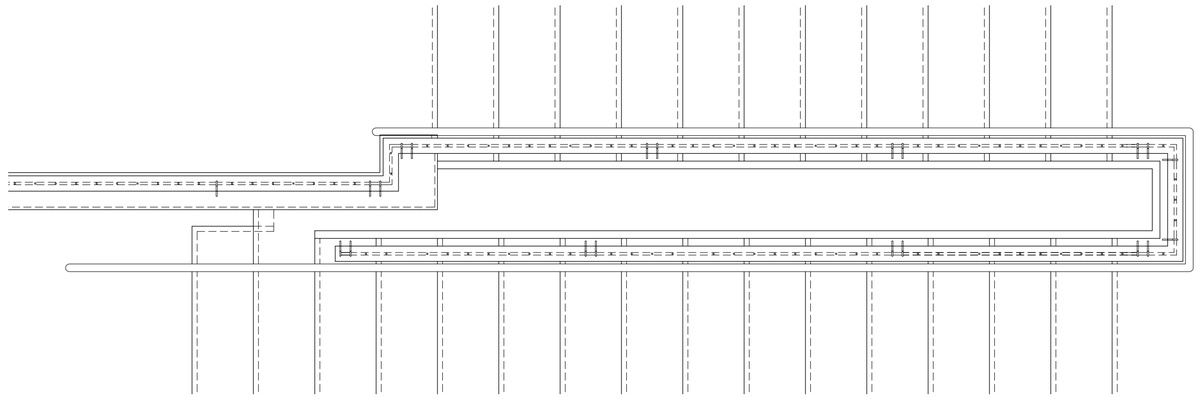

5 STAIR 1 & 7 PLAN OF HANDRAIL / GUARDRAIL
1" = 1'-0"

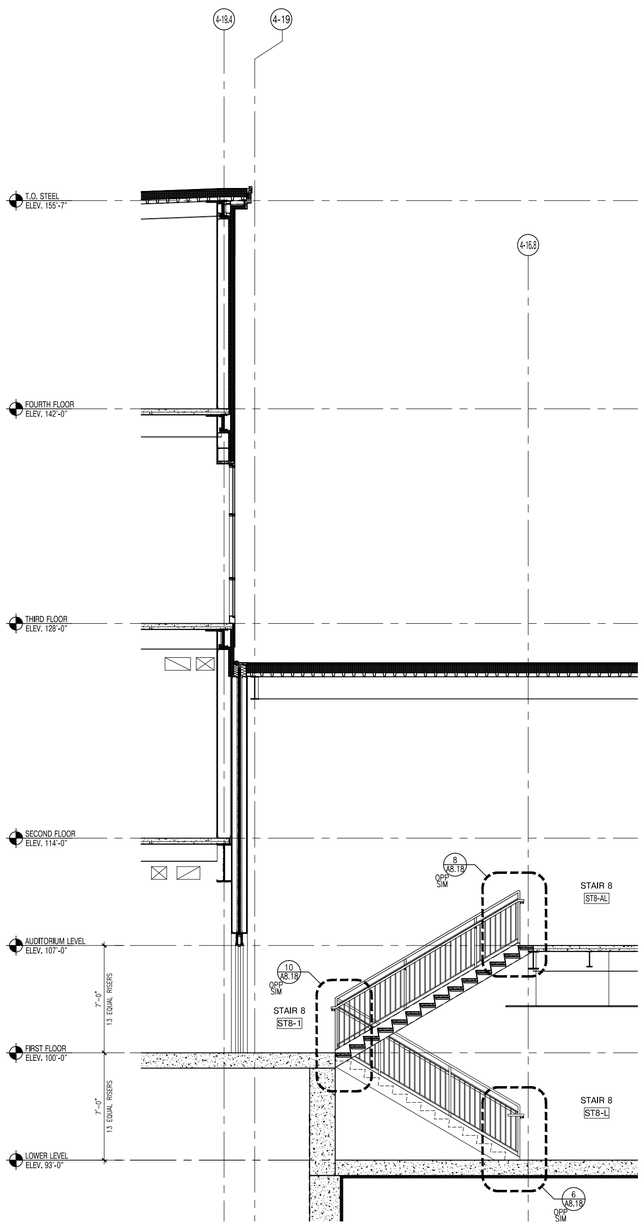

4 STAIR 8 ENLARGED SECTION
1/4" = 1'-0"

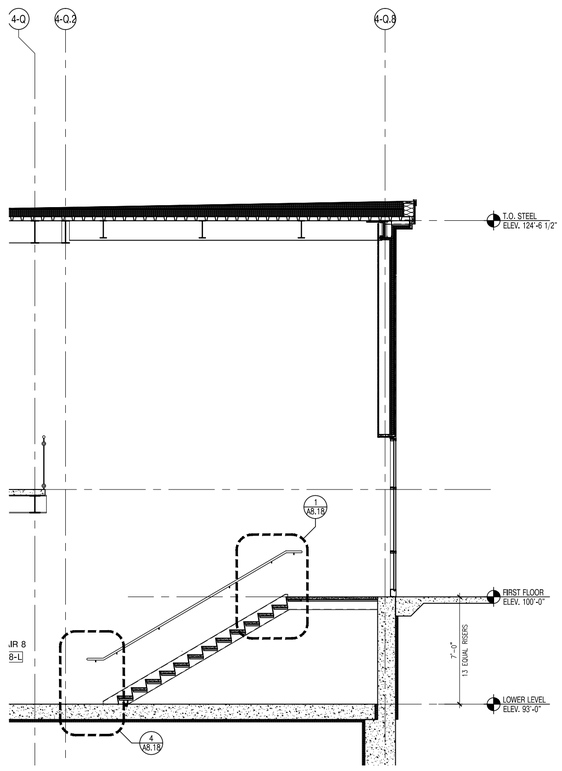

3 STAIR 8 ENLARGED SECTION
1/4" = 1'-0"

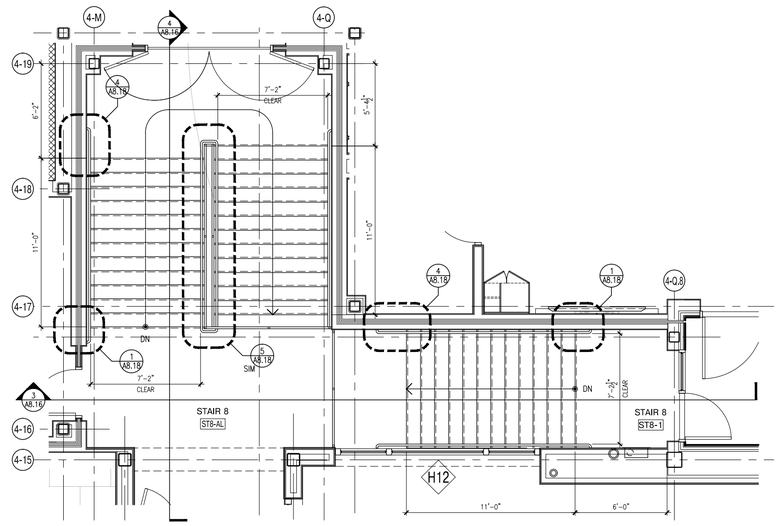

2 STAIR 8 ENLARGED PLAN
1/4" = 1'-0"
FIRST FLOOR

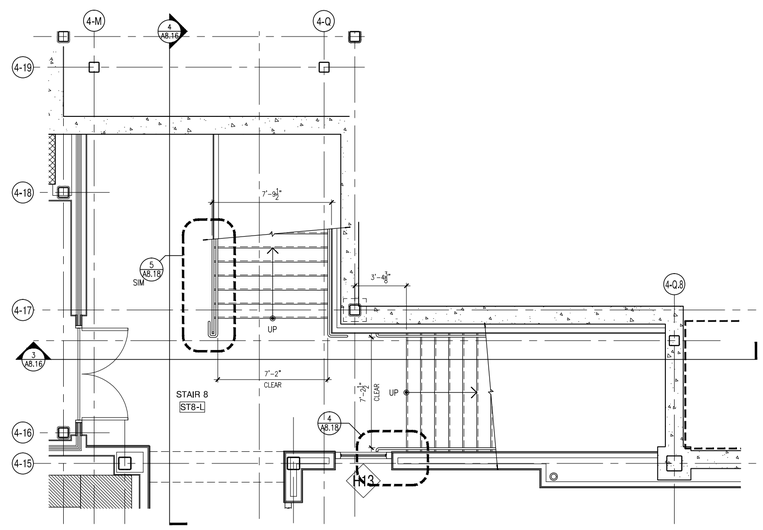

1 STAIR 8 ENLARGED PLAN
1/4" = 1'-0"
LOWER LEVEL

A13 architects
526 Boston Post Rd Wayland, MA
508.358.0790 www.a13architects.com

Copyright © 2016 A13 Architects, LLC

BEVERLY MIDDLE SCHOOL

CABOT STREET
BEVERLY, MA 01915

KEYNOTE LEGEND: (REFERENCE SHEETS A0.01 & A0.02 FOR MASTER KEYNOTE LIST AND KEYNOTES NOT LISTED)

90% CONSTRUCTION DOCUMENTS

NOT FOR CONSTRUCTION

NORTH ARROW

KEYPLAN

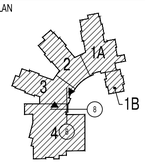

DRAWING NAME:
STAIR 8 ENLARGED PLANS & SECTION

DRAWN BY:	RPM / JEQ
REVIEWED BY:	CLO
SCALE:	As Noted
JOB NO.:	1403.00
DATE:	July 25, 2016
DRAWING NUMBER:	A8.16

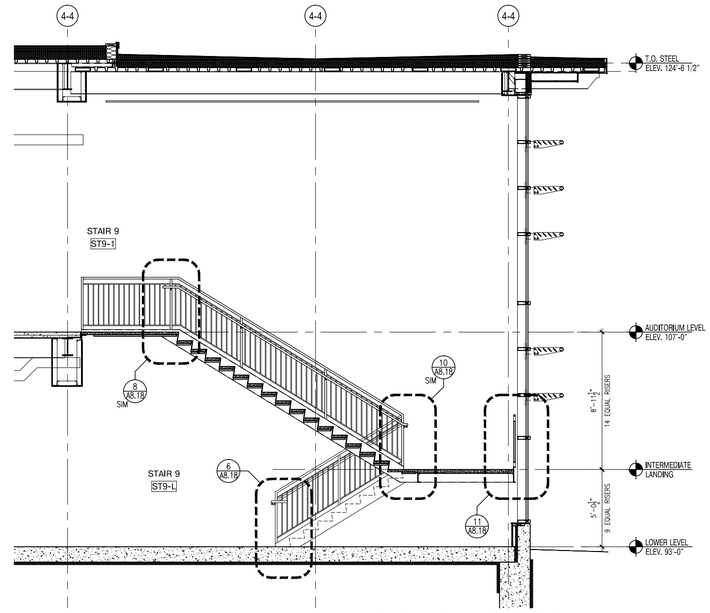

3 STAIR 9 ENLARGED SECTION
1/4" = 1'-0"

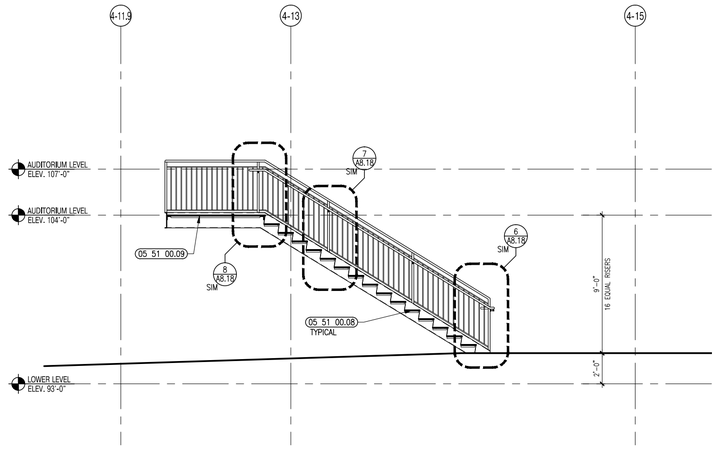

7 STAIR 11 ENLARGED SECTION
1/4" = 1'-0"

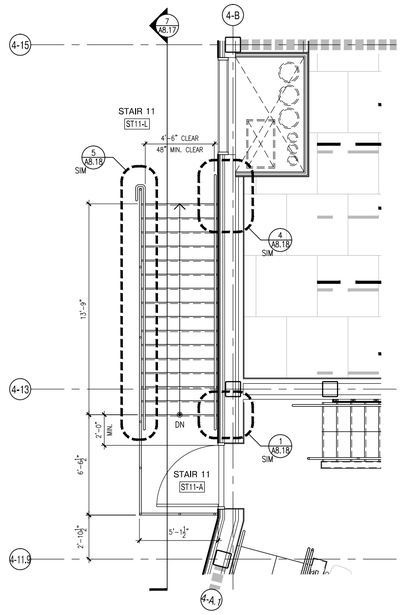

5 STAIR 11 ENLARGED PLAN
1/4" = 1'-0"
AUDITORIUM LEVEL

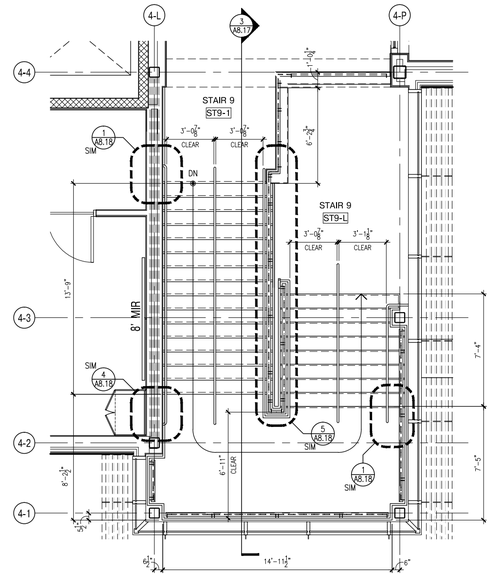

2 STAIR 9 ENLARGED PLAN
1/4" = 1'-0"
FIRST FLOOR

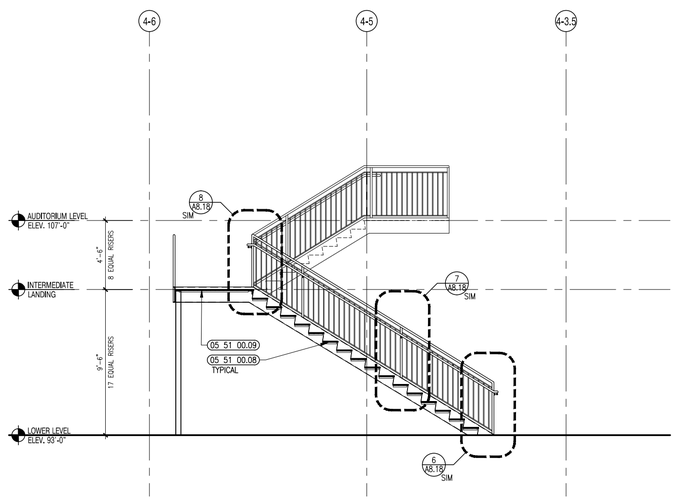

6 STAIR 10 ENLARGED SECTION
1/4" = 1'-0"

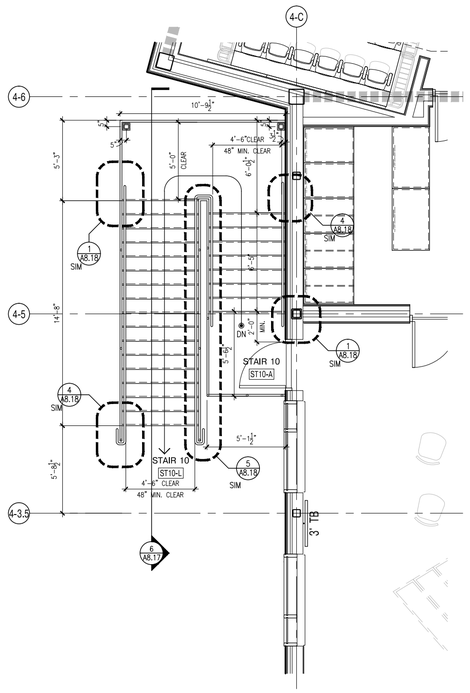

4 STAIR 10 ENLARGED PLAN
1/4" = 1'-0"
FIRST FLOOR

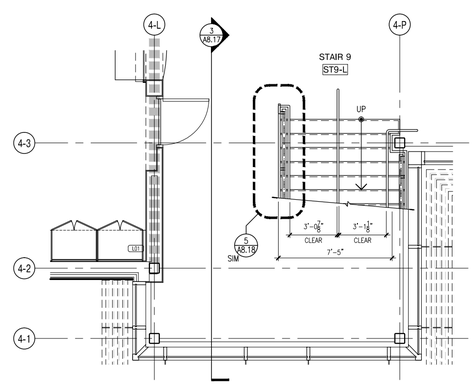

1 STAIR 9 ENLARGED PLAN
1/4" = 1'-0"
LOWER LEVEL

526 Boston Post Rd Wayland, MA
508.358.0790 www.ai3architects.com

BEVERLY MIDDLE SCHOOL

CABOT STREET
BEVERLY, MA 01915

Copyright © 2016 A13 Architects, LLC

KEYNOTE LEGEND: (REFERENCE SHEETS A0.01 & A0.02 FOR MASTER KEYNOTE LIST AND KEYNOTES NOT LISTED)

05 51 00.08 STEEL GRATE TREAD
05 51 00.09 STEEL GRATE LANDING

90% CONSTRUCTION DOCUMENTS

NOT FOR CONSTRUCTION

NORTH ARROW

KEYPLAN

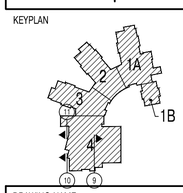

DRAWING NAME:

STAIRS 9,10 & 11 ENLARGED PLANS & SECTIONS

DRAWN BY: RPM / JEQ
REVIEWED BY: CLO
SCALE: As Noted
JOB NO.: 1403.00
DATE: July 25, 2016
DRAWING NUMBER: A8.17

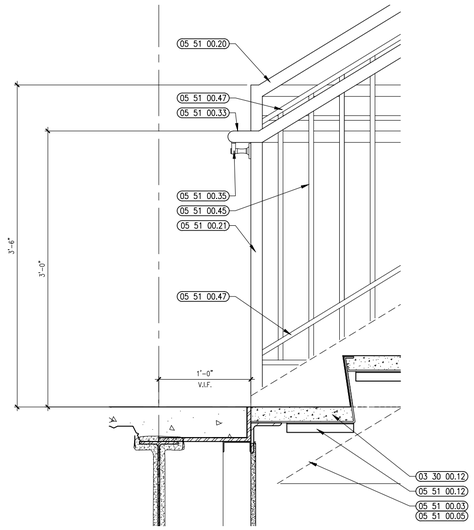

11 STAIR DETAIL
1 1/2" = 1'-0"

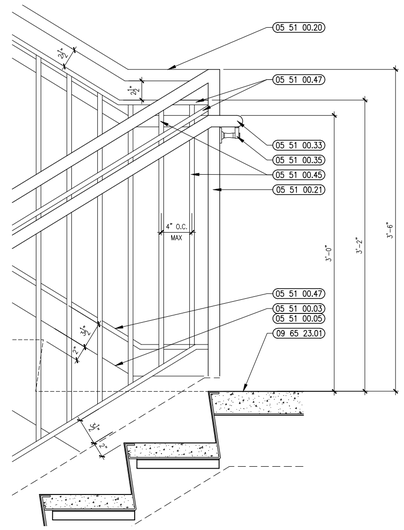

8 STAIR DETAIL
1 1/2" = 1'-0"

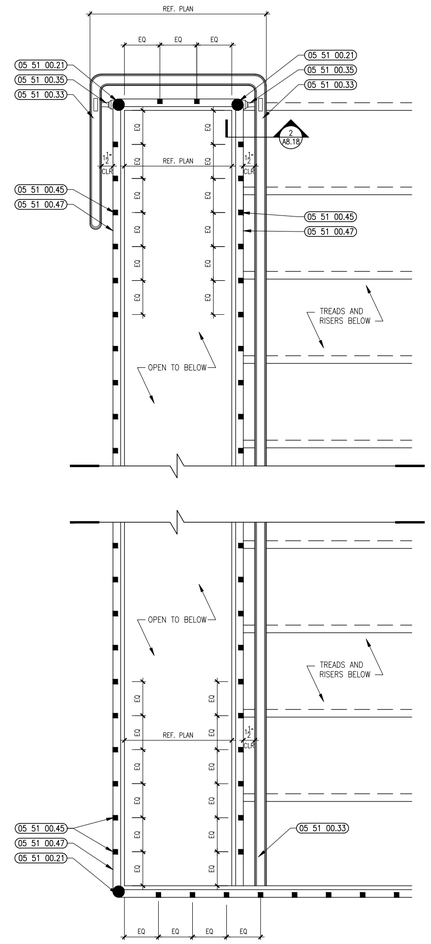

5 PLAN OF HANDRAIL / GUARDRAIL
1 1/2" = 1'-0"

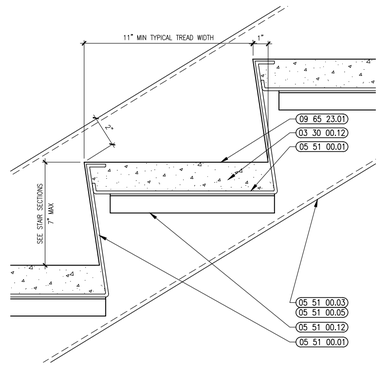

3 TYP TREAD AND RISER
3" = 1'-0"

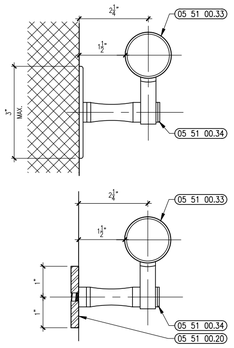

2 SECTION @ HANDRAIL
6" = 1'-0"

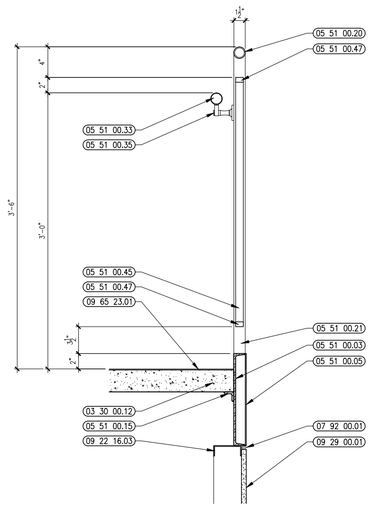

10 STAIR DETAIL
1 1/2" = 1'-0"

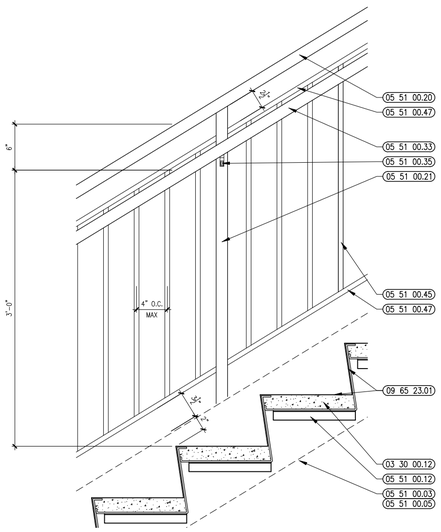

7 STAIR DETAIL
1 1/2" = 1'-0"

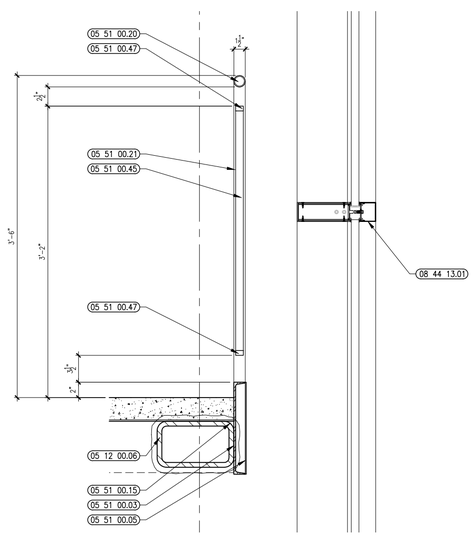

9 STAIR DETAIL
1 1/2" = 1'-0"

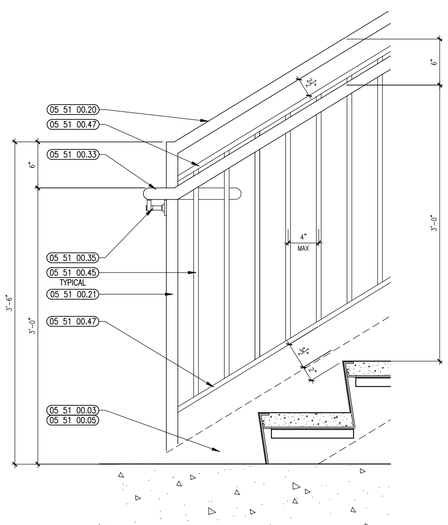

6 STAIR DETAIL
1 1/2" = 1'-0"

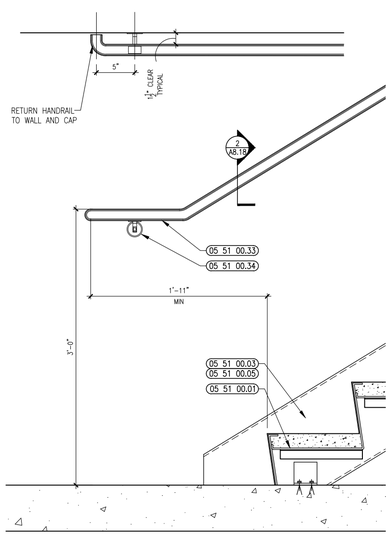

4 STAIR DETAIL
1 1/2" = 1'-0"

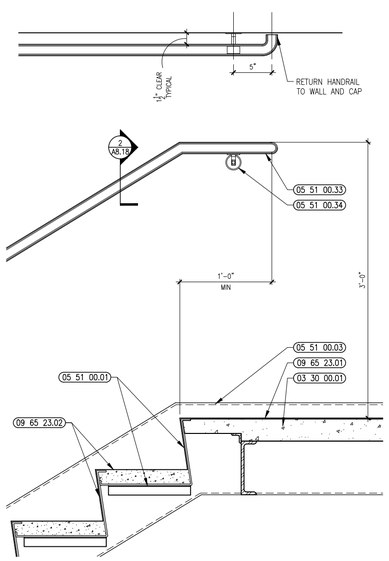

1 STAIR DETAIL
1 1/2" = 1'-0"

A13 architects
526 Boston Post Rd Wayland, MA
508.358.0790 www.a13architects.com

BEVERLY MIDDLE SCHOOL

CABOT STREET
BEVERLY, MA 01915

Copyright © 2016 A13 Architects, LLC

KEYNOTE LEGEND: (REFERENCE SHEETS A0.01 & A0.02 FOR MASTER KEYNOTE LIST AND KEYNOTES NOT LISTED)

03 30 00.01	CONCRETE
03 30 00.12	NORMAL WEIGHT CONCRETE – SEE STRUCTURAL
05 12 00.06	STEEL TUBE – SEE STRUCTURAL
05 51 00.01	STEEL PAN TREAD AND RISER
05 51 00.03	STEEL CHANNEL STRINGER
05 51 00.05	STEEL CLOSURE PLATE – WELDED AND GROUND SMOOTH
05 51 00.12	STEEL ANGLE CARRIER
05 51 00.15	STEEL ANGLE 2 X 2 X 3/8
05 51 00.20	STEEL PIPE GUARDRAIL – 1-1/2 INCH O.D.
05 51 00.21	STEEL PIPE GUARDRAIL POST – 1-1/2 INCH O.D.
05 51 00.33	STAINLESS STEEL PIPE HANDRAIL – 1-1/2 INCH O.D.
05 51 00.34	STAINLESS STEEL HANDRAIL BRACKET
05 51 00.35	STAINLESS STEEL HANDRAIL POST BRACKET
05 51 00.45	STEEL BAR – 5/8 INCH x 5/8 INCH
05 51 00.47	STEEL BAR – 5/8 INCH x 1 INCH
07 92 00.01	JOINT SEALANT – TYPE AS REQUIRED
09 22 16.03	METAL STUD 3-5/8 INCH – 16 INCHES O.C. MAX
09 29 00.01	5/8 INCH GYPSUM BOARD – LEVEL 4 FINISH
09 65 23.01	RUBBER FLOOR TILE – RAISED STUD PROFILE – STAIR TREADS/RISERS AND LANDINGS
09 65 23.02	RUBBER FLOOR TILE – HAMMERED PROFILE

GENERAL NOTES:

1. ALL STAIR CHANNEL STRINGERS SHALL RECEIVE STEEL CLOSURE PLATES – WELDED AND GROUND SMOOTH.
2. ALL PENETRATIONS THROUGH FIRE RATED CONSTRUCTION SHALL BE SEALED WITH FIRESTOPPING CAULK TO MAINTAIN INTEGRITY OF FIRE RATING.
3. ALL EXPOSED TO VIEW RAILING AND STAIR STEEL INCLUDING, BUT NOT LIMITED TO, BARS, TUBES, PLATES, CHANNELS, AND PIPES TO BE PAINTED BY 09 91 00 – UNLESS NOTED TO BE STAINLESS STEEL.

90% CONSTRUCTION DOCUMENTS

NOT FOR CONSTRUCTION

NORTH ARROW

KEYPLAN

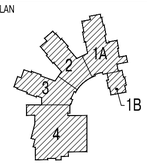

DRAWING NAME:

STAIR DETAILS

DRAWN BY:	RPM / JEQ
REVIEWED BY:	CLO
SCALE:	As Noted
JOB NO.:	1403.00
DATE:	July 25, 2016
DRAWING NUMBER:	A8.18

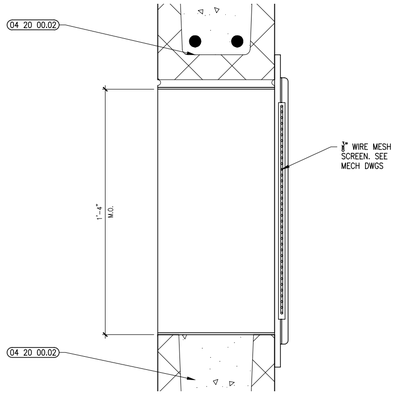

10 VERTICAL DETAIL
3" = 1'-0"

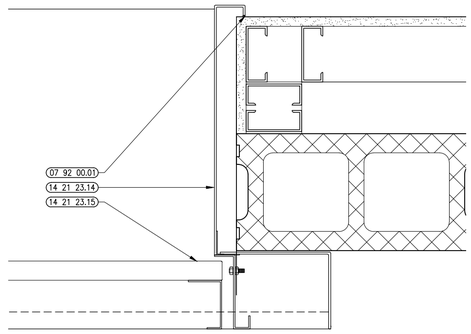

11 JAMB AT ELEVATOR DOOR
3" = 1'-0"

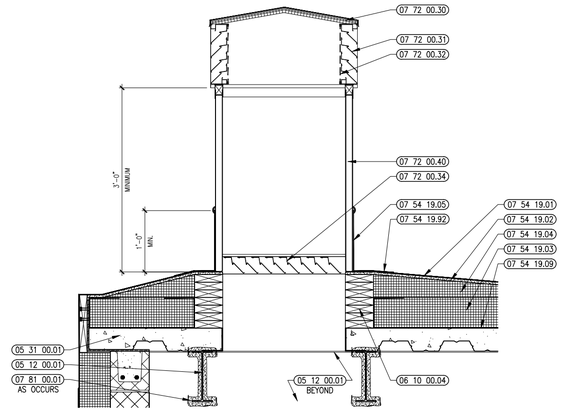

12 ELEVATOR 1 PENTHOUSE DETAIL
1" = 1'-0"

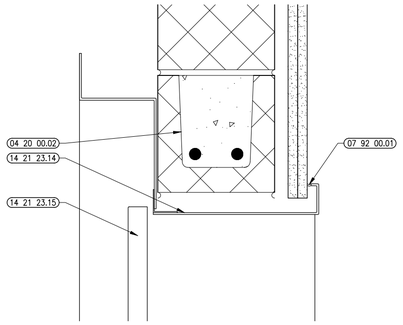

9 HEAD AT ELEVATOR DOOR
3" = 1'-0"

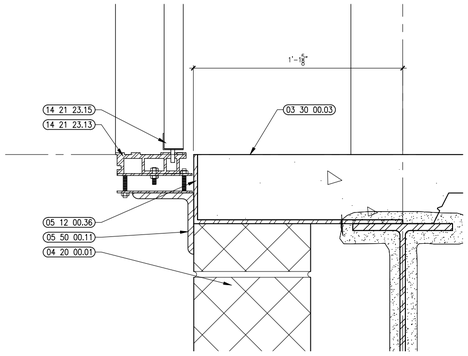

8 SILL AT ELEVATOR DOOR
3" = 1'-0"

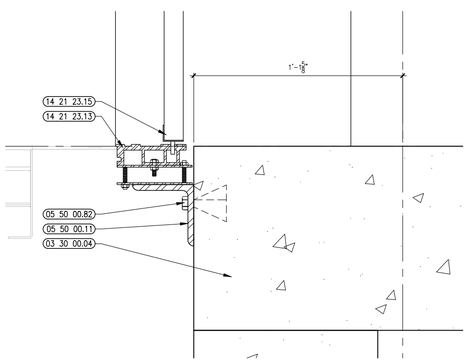

7 SILL AT ELEVATOR DOOR
3" = 1'-0"

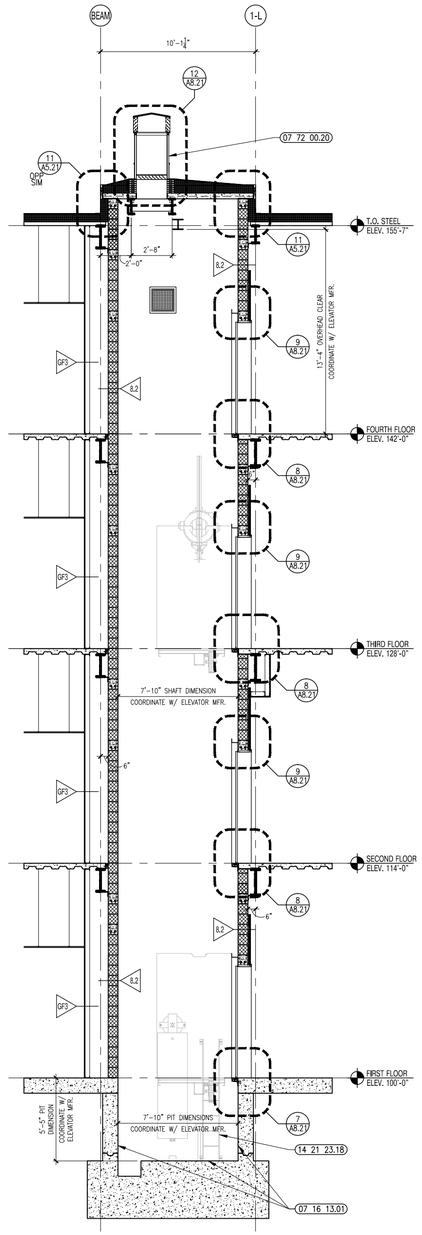

6 ELEVATOR 1 SECTION @ SHAFT
1/4" = 1'-0"

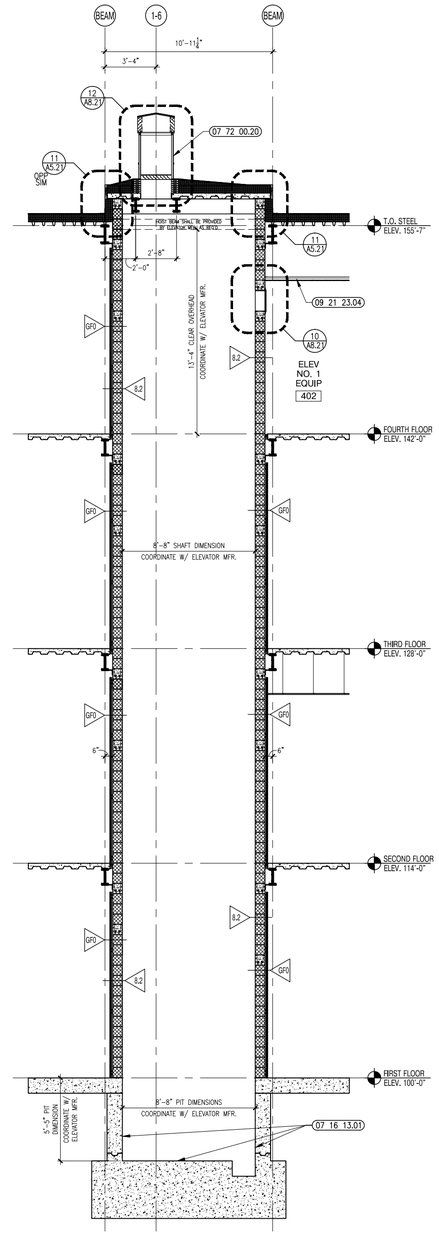

5 ELEVATOR 1 SECTION @ SHAFT
1/4" = 1'-0"

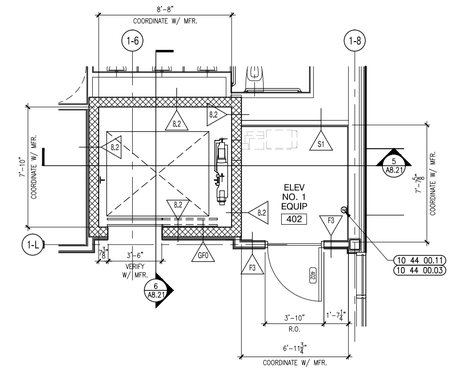

4 ELEVATOR 1 ENLARGED PLAN
1/4" = 1'-0"
FOURTH FLOOR

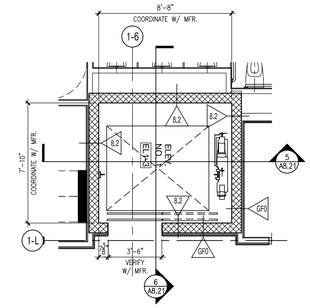

3 ELEVATOR 1 ENLARGED PLAN
1/4" = 1'-0"
THIRD FLOOR

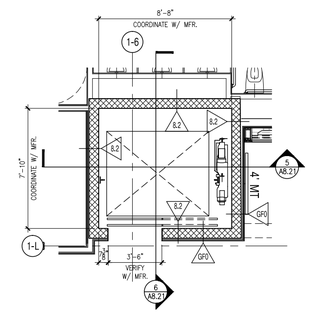

2 ELEVATOR 1 ENLARGED PLAN
1/4" = 1'-0"
SECOND FLOOR

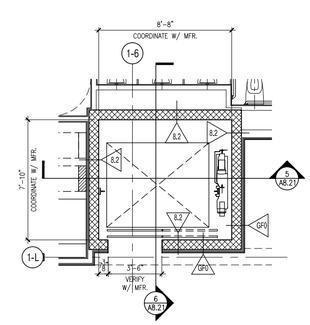

1 ELEVATOR 1 ENLARGED PLAN
1/4" = 1'-0"
FIRST FLOOR

A13 architects
526 Boston Post Rd Wayland, MA
508.358.0790 www.a13architects.com

BEVERLY MIDDLE SCHOOL

CABOT STREET
BEVERLY, MA 01915

Copyright © 2016 A13 Architects, LLC

KEYNOTE LEGEND: (REFERENCE SHEETS A0.01 & A0.02 FOR MASTER KEYNOTE LIST AND KEYNOTES NOT LISTED)

03 30 00.03	CONCRETE SLAB ON DECK – SEE STRUCTURAL
03 30 00.04	CONCRETE FOOTING – SEE STRUCTURAL
04 20 00.01	CMU – STANDARD – NORMAL WEIGHT – REFERENCE DRAWINGS FOR DEPTH SIZE AND FIRE RATING
04 20 00.02	CMU BOND BEAM – SEE STRUCTURAL
05 12 00.01	STEEL BEAM – SEE STRUCTURAL
05 31 00.01	COMPOSITE STEEL DECK – SEE STRUCTURAL
05 50 00.11	STEEL ANGLE – SUPPORT FOR ELEVATOR SILL – SIZE AS REQUIRED
05 50 00.82	EXPANSION BOLT
07 16 13.01	POLYMER MODIFIED CEMENT WATERPROOFING MATERIAL
07 54 19.01	PVC SINGLE PLY MEMBRANE ROOFING
07 54 19.02	HIGH DENSITY POLYISO RECOVERY BOARD
07 54 19.03	POLYISO RIGID INSULATION
07 54 19.09	SHEET VAPOR RETARDER – TAPE SEAMS
07 72 00.20	ELEVATOR PENTHOUSE STRUCTURE
07 72 00.30	12 GA. ALUM. ROOF
07 72 00.31	STORM PROOF LOUVER BLADE
07 72 00.32	INSECT SCREEN
07 72 00.34	MECHANICAL DAMPER
07 72 00.40	WELDED ALUMINUM CURB
07 81 00.01	CEMENTITIOUS FIREPROOFING
07 92 00.01	JOINT SEALANT – TYPE AS REQUIRED
09 21 23.04	HORIZONTAL SHAFT ENCLOSURE – 2 HR RATING
14 21 23.13	ELEVATOR SILL
14 21 23.14	ELEVATOR DOOR FRAME
14 21 23.15	ELEVATOR DOORS
14 21 23.18	ELEVATOR PIT LADDER

90% CONSTRUCTION DOCUMENTS

NOT FOR CONSTRUCTION

NORTH ARROW

KEYPLAN

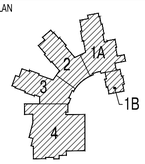

DRAWING NAME:

ELEVATOR 1 PLANS, SECTIONS, AND DETAILS

DRAWN BY:	JEQ
REVIEWED BY:	CLO
SCALE:	As Noted
JOB NO.:	1403.00
DATE:	July 25, 2016
DRAWING NUMBER:	A8.21

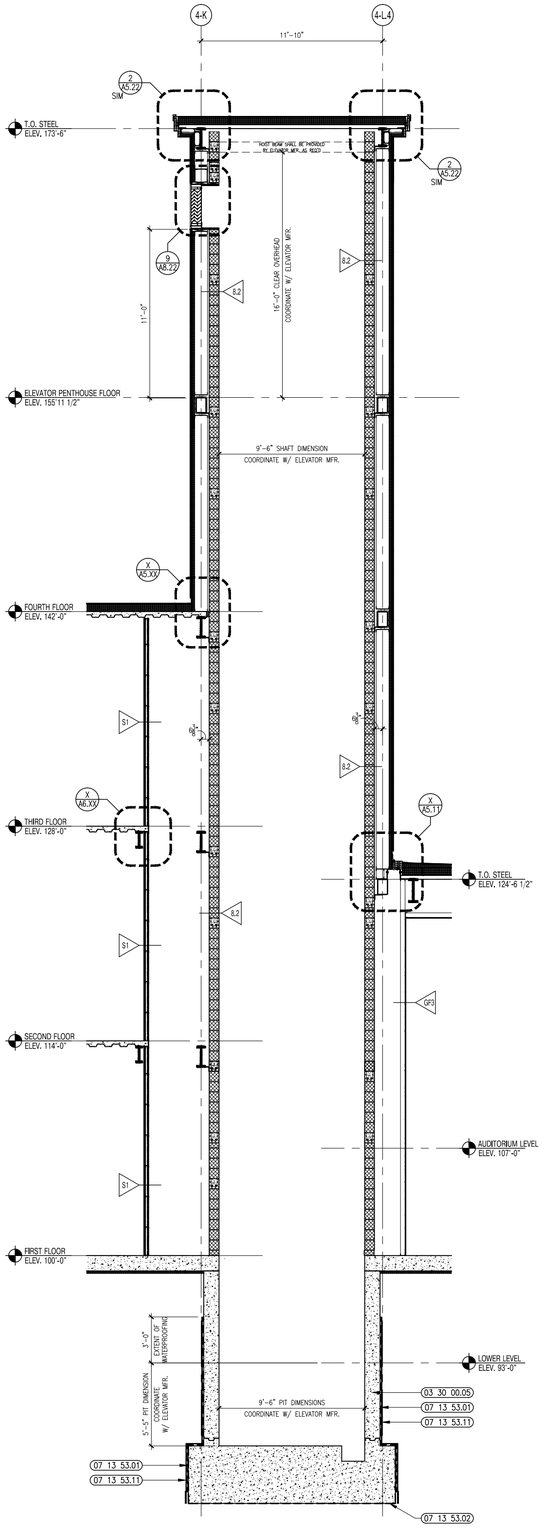

8 ELEVATOR 2 SECTION @ SHAFT
1/4" = 1'-0"

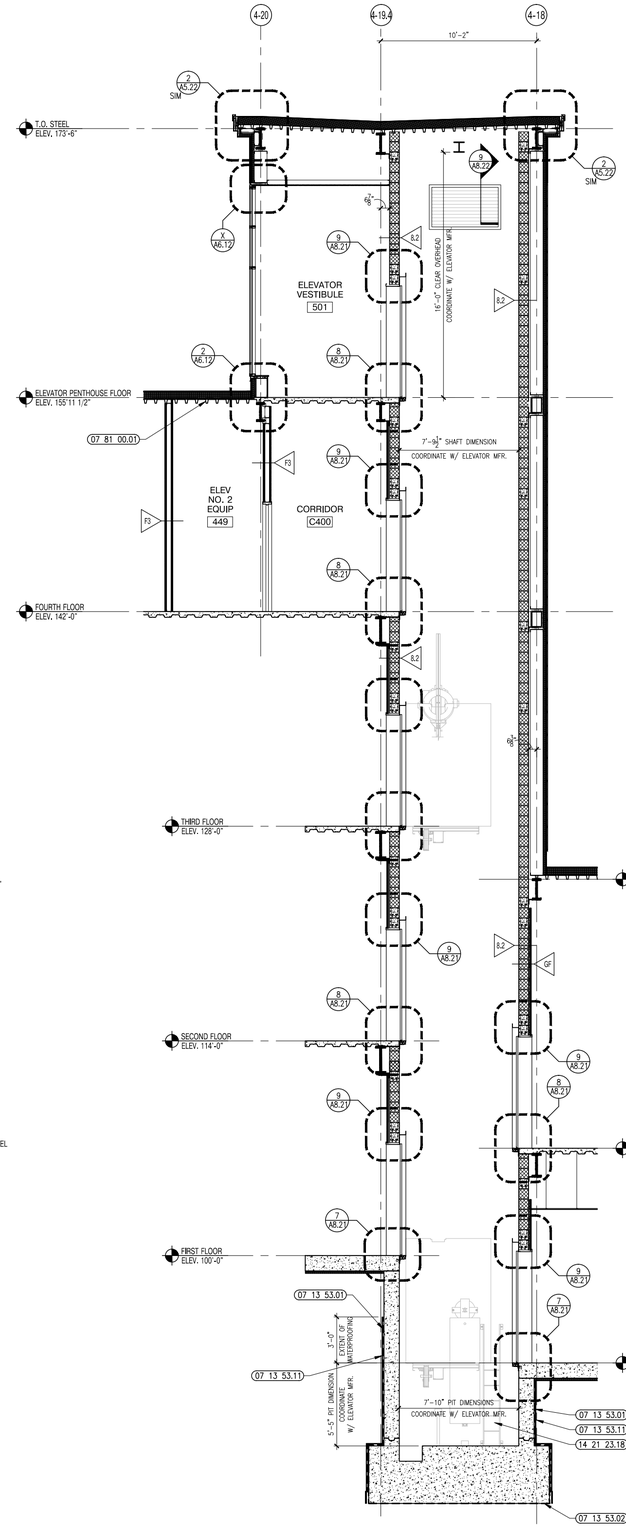

7 ELEVATOR 2 SECTION @ SHAFT
1/4" = 1'-0"

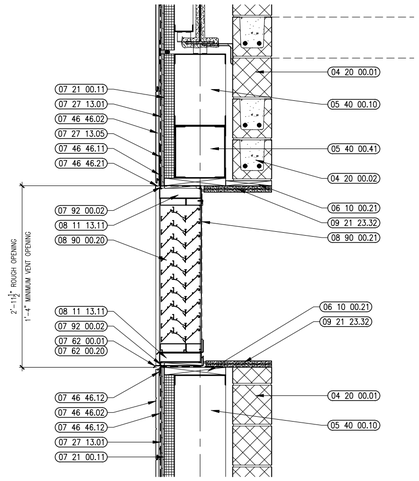

9 ELEVATOR 2 LOUVER DETAIL
1" = 1'-0"

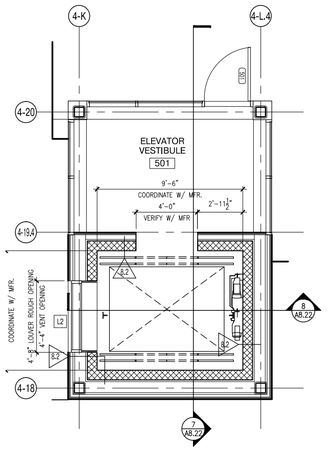

6 ELEVATOR 2 ENLARGED PLAN
1/4" = 1'-0"
ROOF LEVEL

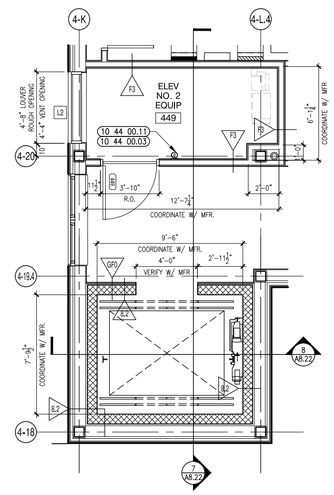

5 ELEVATOR 2 ENLARGED PLAN
1/4" = 1'-0"
FOURTH FLOOR

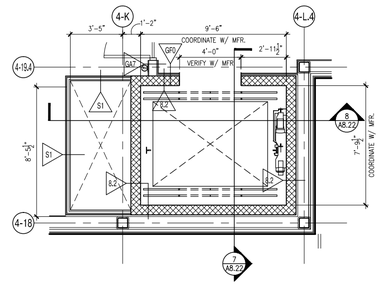

4 ELEVATOR 2 ENLARGED PLAN
1/4" = 1'-0"
THIRD FLOOR

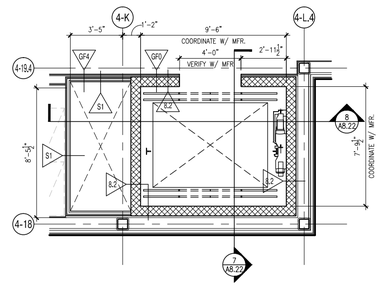

3 ELEVATOR 2 ENLARGED PLAN
1/4" = 1'-0"
SECOND FLOOR

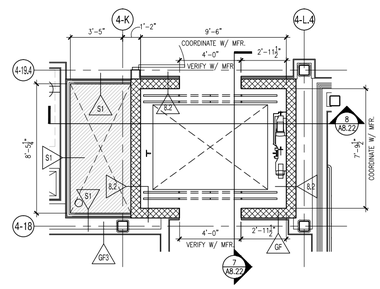

2 ELEVATOR 2 ENLARGED PLAN
1/4" = 1'-0"
FIRST FLOOR

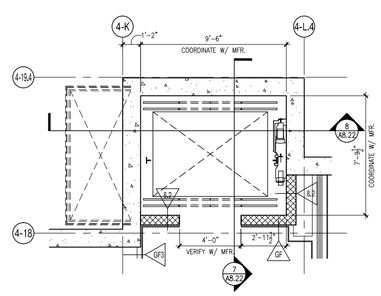

1 ELEVATOR 2 ENLARGED PLAN
1/4" = 1'-0"
LOWER LEVEL

526 Boston Post Rd Wayland, MA
508.358.0790 www.ai3architects.com

BEVERLY MIDDLE SCHOOL

CABOT STREET
BEVERLY, MA 01915

Copyright © 2016 Ai3 Architects, LLC

KEYNOTE LEGEND: (REFERENCE SHEETS A0.01 & A0.02 FOR MASTER KEYNOTE LIST AND KEYNOTES NOT LISTED)

03 30 00.05	CONCRETE FOUNDATION – SEE STRUCTURAL
04 20 00.01	CMU – STANDARD – NORMAL WEIGHT – REFERENCE DRAWINGS FOR DEPTH SIZE AND FIRE RATING
04 20 00.02	CMU BOND BEAM – SEE STRUCTURAL
05 40 00.10	STEEL STUDS – 10 INCH – 16 INCHES O.C. MAX
05 40 00.41	STEEL STUD & TRACK – BOXED HEADER
06 10 00.21	WOOD BLOCKING – 2X FIRE RETARDANT TREATED – SIZE AS NOTED OR DRAWN
07 13 53.01	ADHERED VERTICAL WATERPROOFING
07 13 53.02	BELOW-SLAB HORIZONTAL WATERPROOFING
07 13 53.11	DRAINAGE COMPOSITE BOARD
07 21 00.11	INSULATING NAIL BASE – 2 INCH – EXTERIOR WALL
07 27 13.01	AIR/VAPOR BARRIER MEMBRANE – SELF-ADHERING
07 27 13.05	AIR/VAPOR BARRIER TRANSITION MEMBRANE – SELF-ADHERING
07 46 46.01	MINERAL FIBER CEMENT SIDING PANEL
07 46 46.02	MINERAL FIBER CEMENT SMOOTH PANEL
07 46 46.11	STARTER TRACK/STRIP
07 46 46.12	CLIP
07 46 46.21	FLASHING
07 62 00.01	SHEET METAL FLASHING
07 62 00.20	SEALANT – TYPE AS REQUIRED
07 81 00.01	CEMENTITIOUS FIREPROOFING
07 92 00.02	BACKER ROD AND SEALANT – TYPE AS REQUIRED
08 11 13.11	STEEL FRAME – SEE SCHEDULE FOR TYPES
08 90 00.20	ALUMINUM LOUVER – SEE ELEVATIONS AND SPECIFICATION
08 90 00.21	BIRD SCREEN
09 21 23.32	GYPSUM BOARD – 5/8 INCH TYPE "X" – 2 LAYERS
09 91 00.01	PAINT – SEE SCHEDULE
10 44 00.03	FIRE EXTINGUISHER WALL MOUNTED BRACKET
10 44 00.11	FIRE EXTINGUISHER
14 21 23.18	ELEVATOR PIT LADDER

90% CONSTRUCTION DOCUMENTS

NOT FOR CONSTRUCTION

NORTH ARROW

KEYPLAN

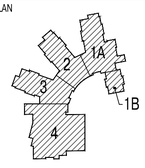

DRAWING NAME:

ELEVATOR 2 PLANS, SECTIONS, & DETAILS

DRAWN BY:	JEQ
REVIEWED BY:	CLO
SCALE:	As Noted
JOB NO.:	1403.00
DATE:	July 25, 2016
DRAWING NUMBER:	A8.22

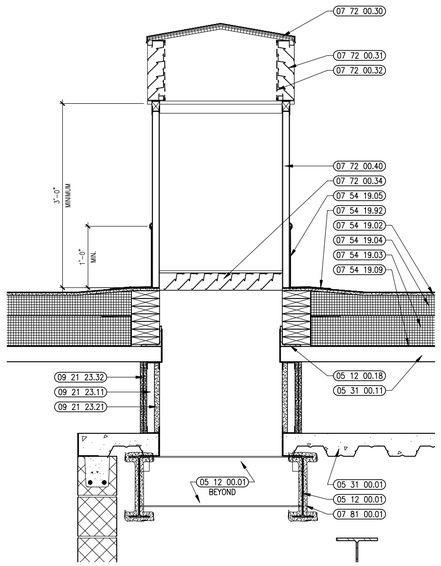

5 ELEVATOR 3 PENTHOUSE DETAIL
1" = 1'-0"

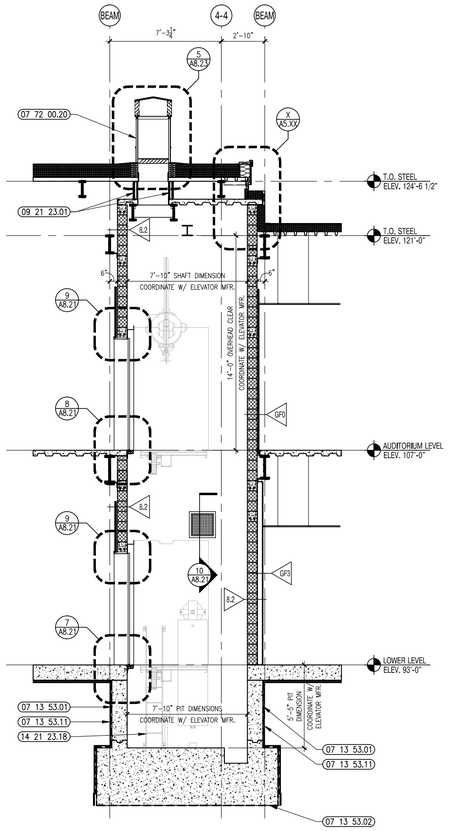

4 ELEVATOR 3 SECTION @ SHAFT
1/4" = 1'-0"

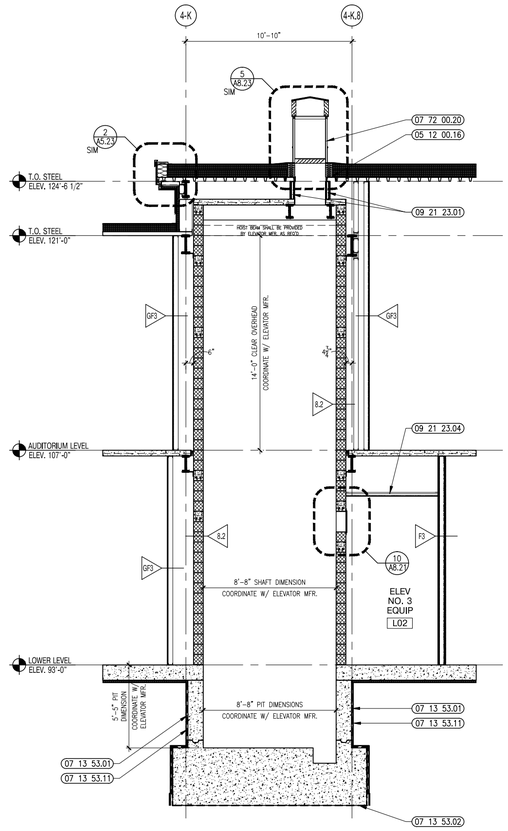

3 ELEVATOR 3 SECTION @ SHAFT
1/4" = 1'-0"

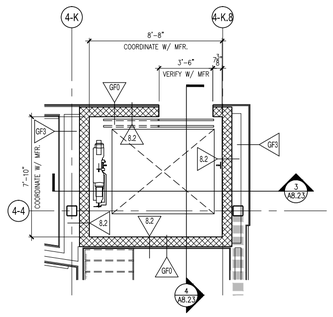

2 ELEVATOR 3 ENLARGED PLAN
1/4" = 1'-0" FIRST FLOOR

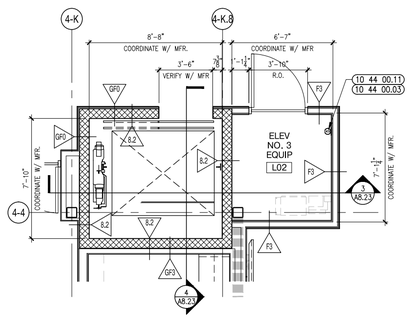

1 ELEVATOR 3 ENLARGED PLAN
1/4" = 1'-0" LOWER LEVEL

526 Boston Post Rd Wayland, MA
508.358.0790 www.ai3architects.com

BEVERLY MIDDLE SCHOOL

CABOT STREET
BEVERLY, MA 01915

Copyright © 2016 Ai3 Architects, LLC

KEYNOTE LEGEND: (REFERENCE SHEETS A0.01 & A0.02 FOR MASTER KEYNOTE LIST AND KEYNOTES NOT LISTED)

05 12 00.01	STEEL BEAM – SEE STRUCTURAL
05 12 00.16	STEEL CHANNEL – SEE STRUCTURAL
05 12 00.18	STEEL ANGLE CONTINUOUS – SEE STRUCTURAL
05 31 00.01	COMPOSITE STEEL DECK – SEE STRUCTURAL
05 31 00.11	STEEL ROOF DECK – 3 INCH GALVANIZED – SEE STRUCTURAL
07 13 53.01	ADHERED VERTICAL WATERPROOFING
07 13 53.02	BELOW-SLAB HORIZONTAL WATERPROOFING
07 13 53.11	DRAINAGE COMPOSITE BOARD
07 54 19.02	HIGH DENSITY POLYISO RECOVERY BOARD
07 54 19.03	POLYISO RIGID INSULATION
07 54 19.04	POLYISO TAPERED INSULATION
07 54 19.05	FLASHING MEMBRANE
07 54 19.09	SHEET VAPOR RETARDER – TAPE SEAMS
07 54 19.92	HOT-AIR WELD
07 72 00.20	ELEVATOR PENTHOUSE STRUCTURE
07 72 00.30	12 GA. ALUM. ROOF
07 72 00.31	STORM PROOF LOUVER BLADE
07 72 00.32	INSECT SCREEN
07 72 00.34	MECHANICAL DAMPER
07 72 00.40	WELDED ALUMINUM CURB
07 81 00.01	CEMENTITIOUS FIREPROOFING
09 21 23.01	SHAFT ENCLOSURE – 2 HR RATING
09 21 23.04	HORIZONTAL SHAFT ENCLOSURE – 2 HR RATING
09 21 23.11	METAL SHAFTWALL C-H STUD – 2 1/2 INCH – 24 INCHES O.C. MAX
09 21 23.21	GYPSUM SHAFTWALL LINER PANEL – 1 INCH
09 21 23.32	GYPSUM BOARD – 5/8 INCH TYPE "X" – 2 LAYERS
10 44 00.03	FIRE EXTINGUISHER WALL MOUNTED BRACKET
10 44 00.11	FIRE EXTINGUISHER
14 21 23.18	ELEVATOR PIT LADDER

90% CONSTRUCTION DOCUMENTS

NOT FOR CONSTRUCTION

NORTH ARROW

KEYPLAN

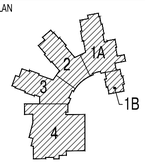

DRAWING NAME:

ELEVATOR 3 PLANS, SECTIONS, & DETAILS

DRAWN BY:	JEQ
REVIEWED BY:	CLO
SCALE:	As Noted
JOB NO.:	1403.00
DATE:	July 25, 2016
DRAWING NUMBER:	A8.23

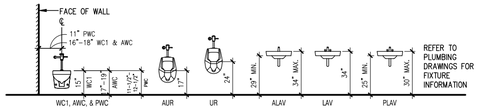

TYPICAL FIXTURE MOUNTING HEIGHTS

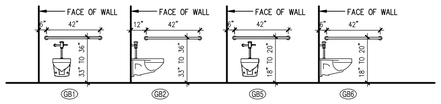

TYPICAL GRAB BAR MOUNTING HEIGHTS

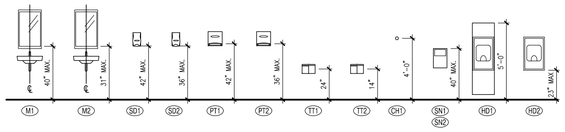

TYPICAL ACCESSORY MOUNTING HEIGHTS

FIXTURE LEGEND

WC1	WC1	WATER CLOSET: ADULT
AWC	AWC	WATER CLOSET: ADULT ACCESSIBLE
PWC	PWC	WATER CLOSET: PRE-KINDERGARTEN ACCESSIBLE
AUR	AUR	URINAL: ADULT ACCESSIBLE
UR	UR	URINAL: ADULT
ALAV	ALAV	LAVATORY: ADULT ACCESSIBLE
LAV	LAV	LAVATORY: ADULT
PLAV	PLAV	LAVATORY: PRE-KINDERGARTEN
SHR	SHR	SHOWER
ASHR	ASHR	ACCESSIBLE SHOWER
SS	SS	SERVICE SINK
FD	FD	FLOOR DRAIN
HB	HB	HOSE BIB
HD1	HD1	HAND DRYER TYPE 1
HD2	HD2	HAND DRYER TYPE 2

TOILET ACCESSORY LEGEND: SEE SPEC SECTION 10 28 13

- GB1 STAINLESS STEEL GRAB BAR: ADULT (REAR WALL)
- GB2 STAINLESS STEEL GRAB BAR: ADULT (SIDE WALL)
- GB3 STAINLESS STEEL GRAB BAR: ADULT 3'X3' HC SHOWER STALL
- GB4 STAINLESS STEEL GRAB BAR: ADULT 2'-6"X5' HC SHOWER STALL
- GB5 STAINLESS STEEL GRAB BAR: PRE-KINDERGARTEN (REAR WALL)
- GB6 STAINLESS STEEL GRAB BAR: PRE-KINDERGARTEN (SIDE WALL)
- M1 STAINLESS STEEL FRAMED MIRROR: ADULT
- M2 STAINLESS STEEL FRAMED MIRROR: PRE-KINDERGARTEN
- SD1 SOAP DISPENSER: ADULT
- SD2 SOAP DISPENSER: PRE-KINDERGARTEN
- PT1 SURFACE MOUNTED PAPER TOWEL DISPENSER: ADULT
- PT2 SURFACE MOUNTED PAPER TOWEL DISPENSER: PRE-KINDERGARTEN
- TT1 TOILET TISSUE DISPENSER: ADULT
- TT2 TOILET TISSUE DISPENSER: PRE-KINDERGARTEN
- CH1 STAINLESS STEEL COAT HOOK: ADULT
- SN1 SANITARY NAPKIN DISPOSAL SURFACE MOUNTED
- SN2 SANITARY NAPKIN DISPOSAL PARTITION MOUNTED DUAL ACCESS
- MH MOP HOLDER
- SH1 STAINLESS STEEL SHELF
- PS PADDED SEAT (MOUNTING HEIGHT OF 17" - 19" AFF)
- SCR SHOWER CURTAIN AND ROD (MOUNTING HEIGHT OF 5'-6" AFF)
- HD1 HAND DRYER (SINGLE TOILET)
- HD2 HAND DRYER (GANG TOILET)

TOILET ACCESSORY SCHEDULE - GENERAL NOTES

DESCRIPTION	NOTES
SOAP DISPENSERS AND PAPER TOWEL DISPENSERS	IN ADDITION TO ALL TOILET ROOM AND LOCKER ROOM LOCATIONS SHOWN, PROVIDE CONCEALED BLOCKING FOR ONE PAPER TOWEL AND ONE SOAP DISPENSER AT EACH SINK THROUGHOUT THE BUILDING.
SOAP DISPENSERS	ALL SOAP DISPENSERS SHALL BE OWNER FURNISHED AND INSTALLED. 06 10 00 - ROUGH CARPENTRY SHALL PROVIDE CONCEALED BLOCKING AS REQUIRED AT ALL SURFACE MOUNTED LOCATIONS..
TOILET TISSUE DISPENSERS AND SANITARY NAPKIN DISPOSALS	COORDINATE EXACT MOUNTING HEIGHT OF GRAB BARS WITH ARCHITECT IN FIELD. NOTE: TOILET TISSUE DISPENSERS SHALL BE 15" AFF, WITH TOP OF DISPENSER 1-1/2" MIN. BELOW THE SIDE GRAB BAR AND 7" TO 9" FROM THE FRONT EDGE OF THE TOILET TO THE CENTERLINE OF THE DISPENSER.
GRAB BARS	PROVIDE 1 1/2" CLEARANCE FROM WALL WITH CONCEALED MOUNTING.
MOP HOLDER	PROVIDE ONE AT EACH MOP SINK LOCATION THROUGHOUT THE BUILDING TO BE MOUNTED OVER MOP SINK AT 5'-6" AFF
COAT HOOK	PROVIDE ONE AT EACH TOILET ROOM PARTITION STALL DOOR MOUNTED TO STALL SIDE OF DOOR AND PROVIDE ONE AT EACH SINGLE TOILET ROOM DOOR ON TOILET SIDE OF DOOR, CENTERED ON ALL DOORS. ALSO PROVIDE AT ADDITIONAL LOCATIONS SHOWN ON DRAWINGS.
PLUMBING FIXTURES	SEE PLUMBING DRAWINGS FOR PLUMBING FIXTURE MOUNTING HEIGHT AND LOCATION VERIFICATIONS.
STAINLESS STEEL SHELVES	PROVIDE ONE AT EACH CUSTODIAN CLOSET MOUNTED ABOVE THE SINK. PROVIDE 1 AT EACH SINGLE USER TOILET ROOM MOUNTED TO WALL ACROSS FROM TOILET. COORDINATE HEIGHT WITH OWNER/ARCHITECT IN THE FIELD.
SURFACE MOUNTED TOILET ACCESSORIES	06 10 00 - ROUGH CARPENTRY SHALL PROVIDE CONCEALED BLOCKING AS REQUIRED AT ALL SURFACE MOUNTED LOCATIONS..

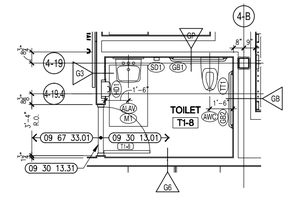

13 ENLARGED TOILET ROOM PLAN
1/4" = 1'-0"

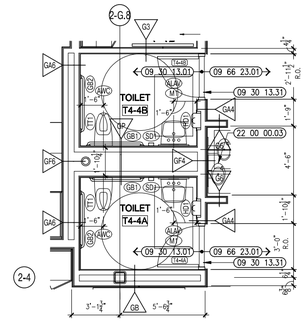

12 ENLARGED TOILET ROOM PLAN
1/4" = 1'-0"

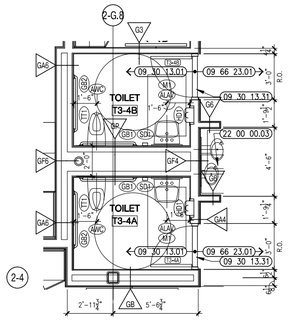

11 ENLARGED TOILET ROOM PLAN
1/4" = 1'-0"

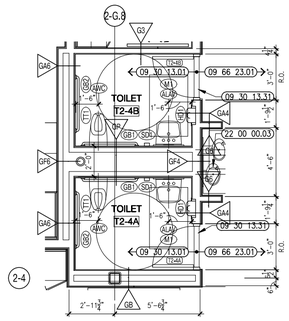

10 ENLARGED TOILET ROOM PLAN
1/4" = 1'-0"

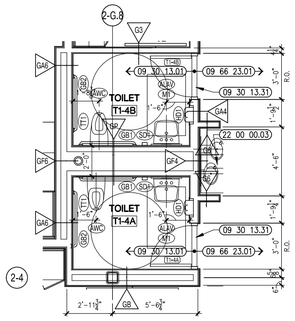

9 ENLARGED TOILET ROOM PLAN
1/4" = 1'-0"

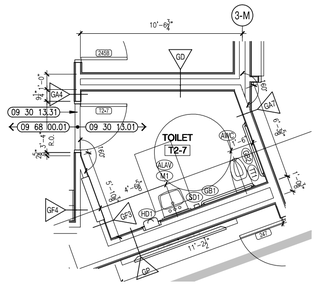

8 ENLARGED TOILET ROOM PLAN
1/4" = 1'-0"

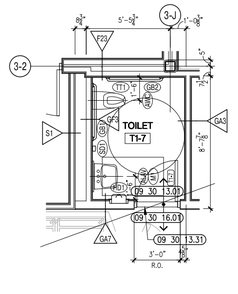

7 ENLARGED TOILET ROOM PLAN
1/4" = 1'-0"

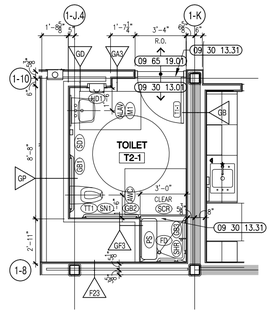

6 ENLARGED TOILET ROOM PLAN
1/4" = 1'-0"

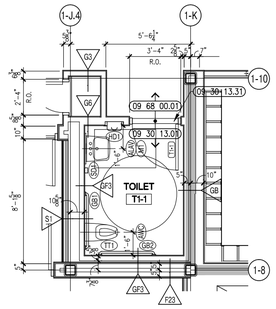

5 ENLARGED TOILET ROOM PLAN
1/4" = 1'-0"

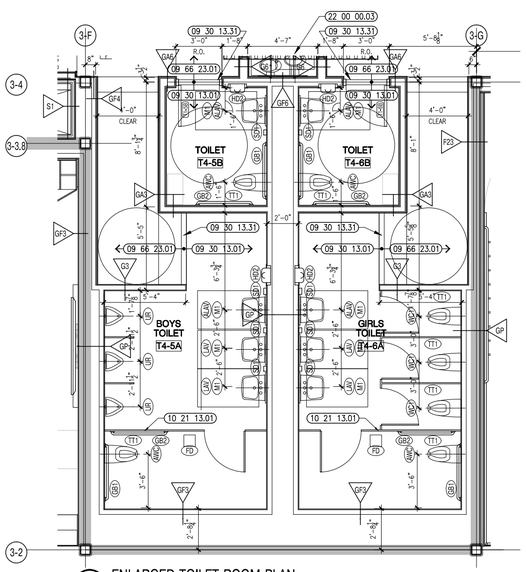

4 ENLARGED TOILET ROOM PLAN
1/4" = 1'-0"

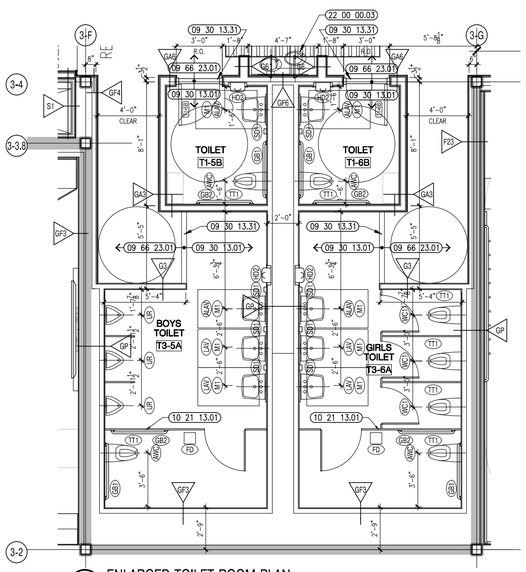

3 ENLARGED TOILET ROOM PLAN
1/4" = 1'-0"

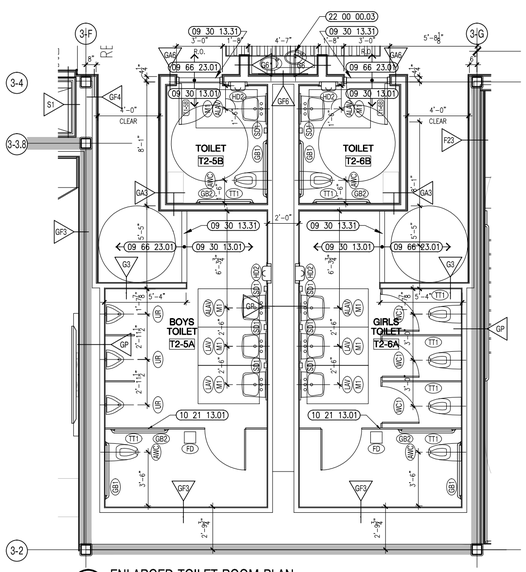

2 ENLARGED TOILET ROOM PLAN
1/4" = 1'-0"

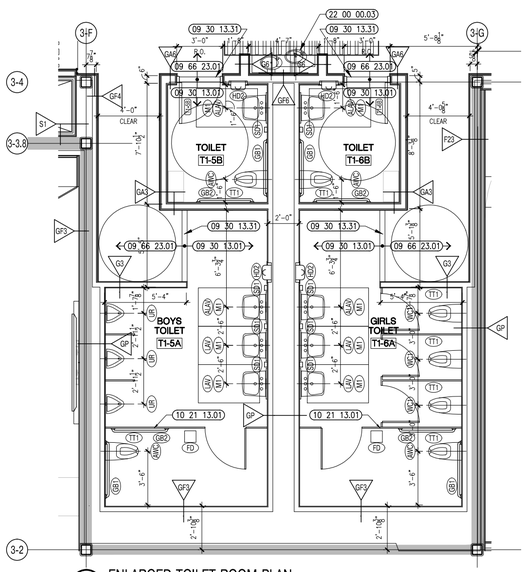

1 ENLARGED TOILET ROOM PLAN
1/4" = 1'-0"

A13 architects
526 Boston Post Rd Wayland, MA
508.358.0790 www.a13architects.com

BEVERLY MIDDLE SCHOOL

CABOT STREET
BEVERLY, MA 01915

Copyright © 2016 A13 Architects, LLC

KEYNOTE LEGEND: (REFERENCE SHEETS A0.01 & A0.02 FOR MASTER KEYNOTE LIST AND KEYNOTES NOT LISTED)

- 09 30 13.01 CERAMIC FLOOR TILE
- 09 30 13.31 MARBLE THRESHOLD
- 09 30 16.01 QUARRY TILE
- 09 65 19.01 VINYL COMPOSITION TILE
- 09 66 23.01 RESINOUS MATRIX TERRAZZO FLOORING
- 09 67 33.01 THIN-FILM EPOXY FLOOR
- 09 68 00.01 CARPET
- 22 00 00.03 WATER FOUNTAIN – SEE PLUMBING

90% CONSTRUCTION DOCUMENTS

NOT FOR CONSTRUCTION

NORTH ARROW

KEYPLAN

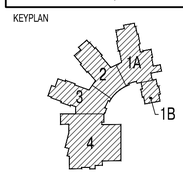

DRAWING NAME:

ENLARGED TOILET ROOM PLANS

DRAWN BY:	JMR / ETF
REVIEWED BY:	BPH
SCALE:	As Noted
JOB NO.:	1403.00
DATE:	July 25, 2016
DRAWING NUMBER:	A8.31

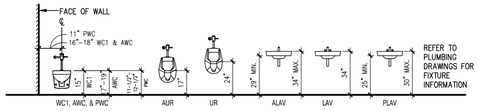

TYPICAL FIXTURE MOUNTING HEIGHTS

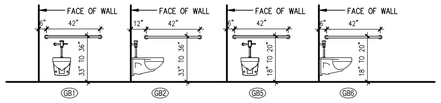

TYPICAL GRAB BAR MOUNTING HEIGHTS

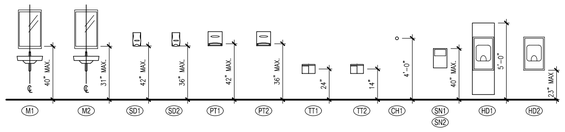

TYPICAL ACCESSORY MOUNTING HEIGHTS

FIXTURE LEGEND

WC1	WC1	WATER CLOSET: ADULT
AWC	AWC	WATER CLOSET: ADULT ACCESSIBLE
PWC	PWC	WATER CLOSET: PRE-KINDERGARTEN ACCESSIBLE
AUR	AUR	URINAL: ADULT ACCESSIBLE
UR	UR	URINAL: ADULT
ALAV	ALAV	LAVATORY: ADULT ACCESSIBLE
LAV	LAV	LAVATORY: ADULT
PLAV	PLAV	LAVATORY: PRE-KINDERGARTEN
SHR	SHR	SHOWER
ASHR	ASHR	ACCESSIBLE SHOWER
SS	SS	SERVICE SINK
FD	FD	FLOOR DRAIN
HB	HB	HOSE BIB
HD1	HD1	HAND DRYER TYPE 1
HD2	HD2	HAND DRYER TYPE 2

TOILET ACCESSORY LEGEND: SEE SPEC SECTION 10 28 13

- GB1 STAINLESS STEEL GRAB BAR: ADULT (REAR WALL)
- GB2 STAINLESS STEEL GRAB BAR: ADULT (SIDE WALL)
- GB3 STAINLESS STEEL GRAB BAR: ADULT 3'X3' HC SHOWER STALL
- GB4 STAINLESS STEEL GRAB BAR: ADULT 2'-6"X5' HC SHOWER STALL
- GB5 STAINLESS STEEL GRAB BAR: PRE-KINDERGARTEN (REAR WALL)
- GB6 STAINLESS STEEL GRAB BAR: PRE-KINDERGARTEN (SIDE WALL)
- M1 STAINLESS STEEL FRAMED MIRROR: ADULT
- M2 STAINLESS STEEL FRAMED MIRROR: PRE-KINDERGARTEN
- SD1 SOAP DISPENSER: ADULT
- SD2 SOAP DISPENSER: PRE-KINDERGARTEN
- PT1 SURFACE MOUNTED PAPER TOWEL DISPENSER: ADULT
- PT2 SURFACE MOUNTED PAPER TOWEL DISPENSER: PRE-KINDERGARTEN
- TT1 TOILET TISSUE DISPENSER: ADULT
- TT2 TOILET TISSUE DISPENSER: PRE-KINDERGARTEN
- CH1 STAINLESS STEEL COAT HOOK: ADULT
- SN1 SANITARY NAPKIN DISPOSAL SURFACE MOUNTED
- SN2 SANITARY NAPKIN DISPOSAL PARTITION MOUNTED DUAL ACCESS
- MH MOP HOLDER
- SH1 STAINLESS STEEL SHELF
- PS PADDED SEAT (MOUNTING HEIGHT OF 17" - 19" AFF)
- SCR SHOWER CURTAIN AND ROD (MOUNTING HEIGHT OF 5'-6" AFF)
- HD1 HAND DRYER (SINGLE TOILET)
- HD2 HAND DRYER (GANG TOILET)

TOILET ACCESSORY SCHEDULE - GENERAL NOTES

DESCRIPTION	NOTES
SOAP DISPENSERS AND PAPER TOWEL DISPENSERS	IN ADDITION TO ALL TOILET ROOM AND LOCKER ROOM LOCATIONS SHOWN, PROVIDE CONCEALED BLOCKING FOR ONE PAPER TOWEL AND ONE SOAP DISPENSER AT EACH SINK THROUGHOUT THE BUILDING.
SOAP DISPENSERS	ALL SOAP DISPENSERS SHALL BE OWNER FURNISHED AND INSTALLED. 06 10 00 - ROUGH CARPENTRY SHALL PROVIDE CONCEALED BLOCKING AS REQUIRED AT ALL SURFACE MOUNTED LOCATIONS..
TOILET TISSUE DISPENSERS AND SANITARY NAPKIN DISPOSALS	COORDINATE EXACT MOUNTING HEIGHT OF GRAB BARS WITH ARCHITECT IN FIELD. NOTE: TOILET TISSUE DISPENSERS SHALL BE 15" AFF, WITH TOP OF DISPENSER 1-1/2" MIN. BELOW THE SIDE GRAB BAR AND 7" TO 9" FROM THE FRONT EDGE OF THE TOILET TO THE CENTERLINE OF THE DISPENSER.
GRAB BARS	PROVIDE 1 1/2" CLEARANCE FROM WALL WITH CONCEALED MOUNTING.
MOP HOLDER	PROVIDE ONE AT EACH MOP SINK LOCATION THROUGHOUT THE BUILDING TO BE MOUNTED OVER MOP SINK AT 5'-6" AFF
COAT HOOK	PROVIDE ONE AT EACH TOILET ROOM PARTITION STALL DOOR MOUNTED TO STALL SIDE OF DOOR AND PROVIDE ONE AT EACH SINGLE TOILET ROOM DOOR ON TOILET SIDE OF DOOR, CENTERED ON ALL DOORS. ALSO PROVIDE AT ADDITIONAL LOCATIONS SHOWN ON DRAWINGS.
PLUMBING FIXTURES	SEE PLUMBING DRAWINGS FOR PLUMBING FIXTURE MOUNTING HEIGHT AND LOCATION VERIFICATIONS.
STAINLESS STEEL SHELVES	PROVIDE ONE AT EACH CUSTODIAN CLOSET MOUNTED ABOVE THE SINK. PROVIDE 1 AT EACH SINGLE USER TOILET ROOM MOUNTED TO WALL ACROSS FROM TOILET. COORDINATE HEIGHT WITH OWNER/ARCHITECT IN THE FIELD.
SURFACE MOUNTED TOILET ACCESSORIES	06 10 00 - ROUGH CARPENTRY SHALL PROVIDE CONCEALED BLOCKING AS REQUIRED AT ALL SURFACE MOUNTED LOCATIONS..

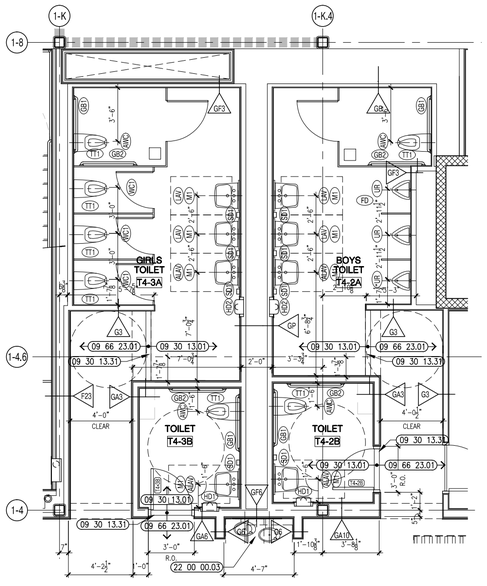

5 ENLARGED TOILET ROOM PLAN
1/4" = 1'-0"

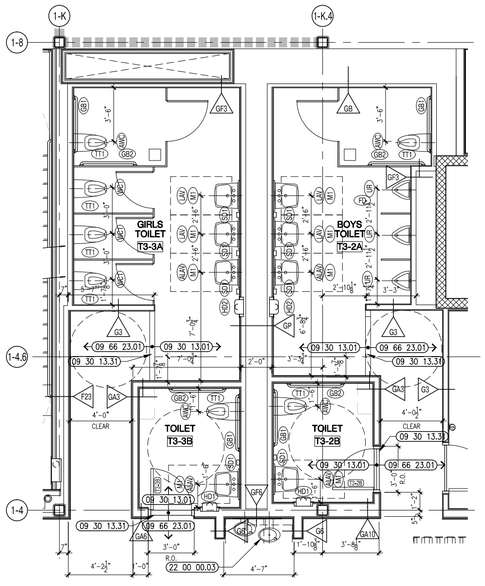

4 ENLARGED TOILET ROOM PLAN
1/4" = 1'-0"

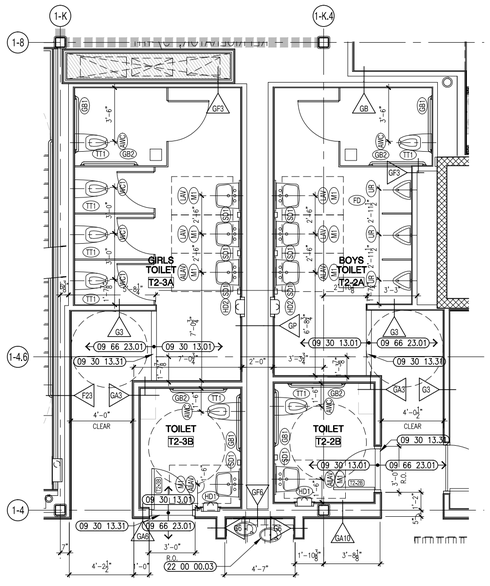

3 ENLARGED TOILET ROOM PLAN
1/4" = 1'-0"

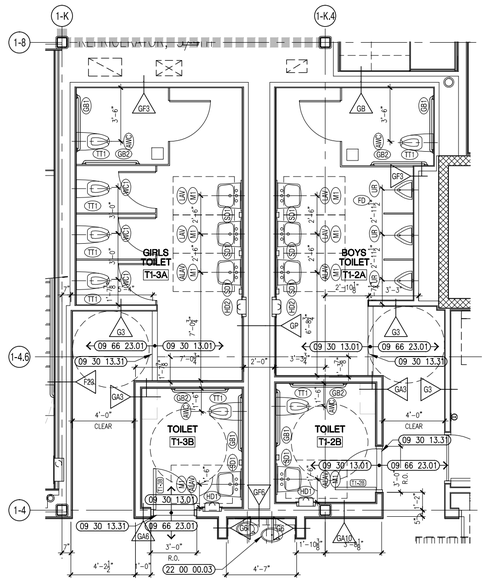

2 ENLARGED TOILET ROOM PLAN
1/4" = 1'-0"

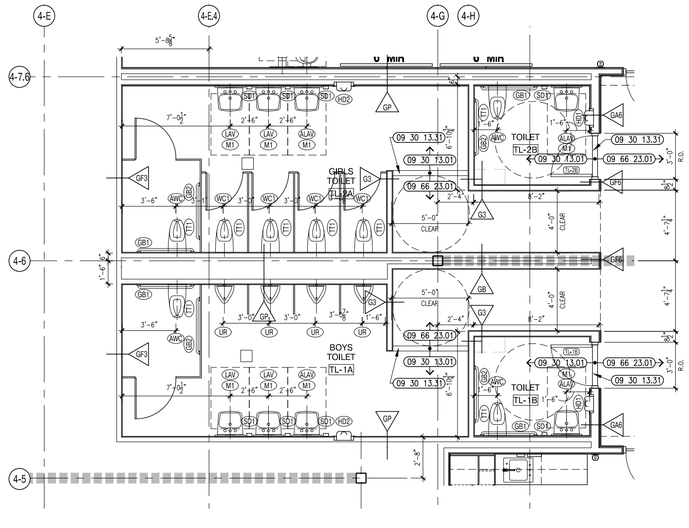

1 ENLARGED TOILET ROOM PLAN
1/4" = 1'-0"

A13 architects
526 Boston Post Rd Wayland, MA
508.358.0790 www.a13architects.com

BEVERLY MIDDLE SCHOOL

CABOT STREET
BEVERLY, MA 01915

Copyright © 2016 A13 Architects, LLC

KEYNOTE LEGEND: (REFERENCE SHEETS A0.01 & A0.02 FOR MASTER KEYNOTE LIST AND KEYNOTES NOT LISTED)

09 30 13.01	CERAMIC MOSAIC FLOOR TILE
09 30 13.31	MARBLE THRESHOLD
09 66 23.01	RESINOUS MATRIX TERRAZZO FLOORING
22 00 00.03	WATER FOUNTAIN – SEE PLUMBING

90% CONSTRUCTION DOCUMENTS

NOT FOR CONSTRUCTION

NORTH ARROW

KEYPLAN

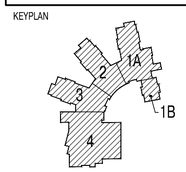

DRAWING NAME:

ENLARGED TOILET ROOM PLANS

DRAWN BY:	JMR / ETF
REVIEWED BY:	BPH
SCALE:	As Noted
JOB NO.:	1403.00
DATE:	July 25, 2016
DRAWING NUMBER:	A8.32

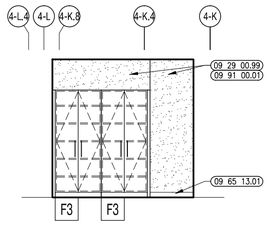

13 CONCESSIONS INTERIOR ELEVATION
1/4" = 1'-0"

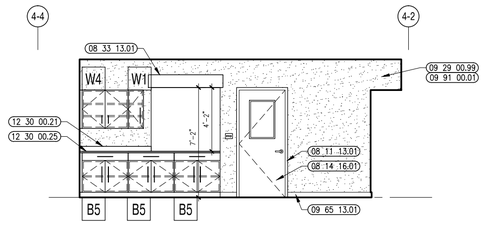

12 CONCESSIONS INTERIOR ELEVATION
1/4" = 1'-0"

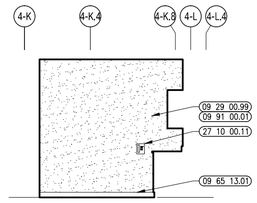

11 CONCESSIONS INTERIOR ELEVATION
1/4" = 1'-0"

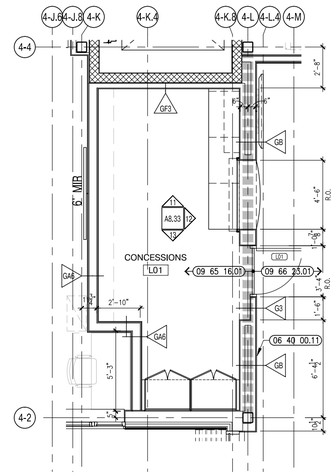

10 ENLARGED CONCESSIONS PLAN
1/4" = 1'-0"

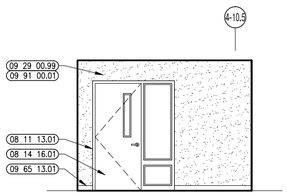

9 PHYS. ED. OFFICE INTERIOR ELEVATION
1/4" = 1'-0"

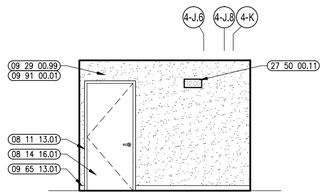

8 PHYS. ED. OFFICE INTERIOR ELEVATION
1/4" = 1'-0"

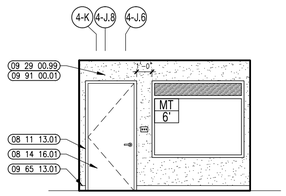

7 PHYS. ED. OFFICE INTERIOR ELEVATION
1/4" = 1'-0"

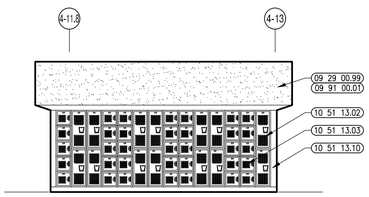

6 LOCKER ROOM INTERIOR ELEVATION
1/4" = 1'-0"

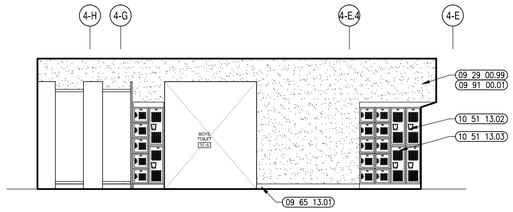

5 LOCKER ROOM INTERIOR ELEVATION
1/4" = 1'-0"

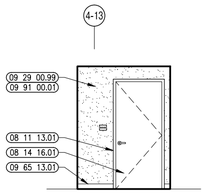

4 LOCKER ROOM INTERIOR ELEVATION
1/4" = 1'-0"

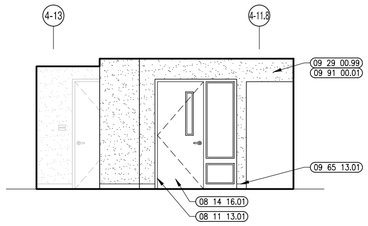

3 LOCKER ROOM INTERIOR ELEVATION
1/4" = 1'-0"

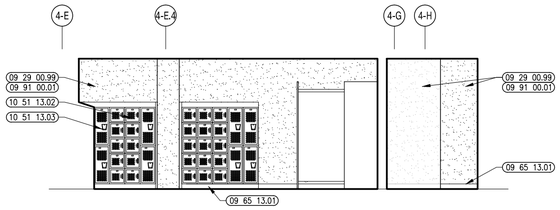

2 LOCKER ROOM INTERIOR ELEVATION
1/4" = 1'-0"

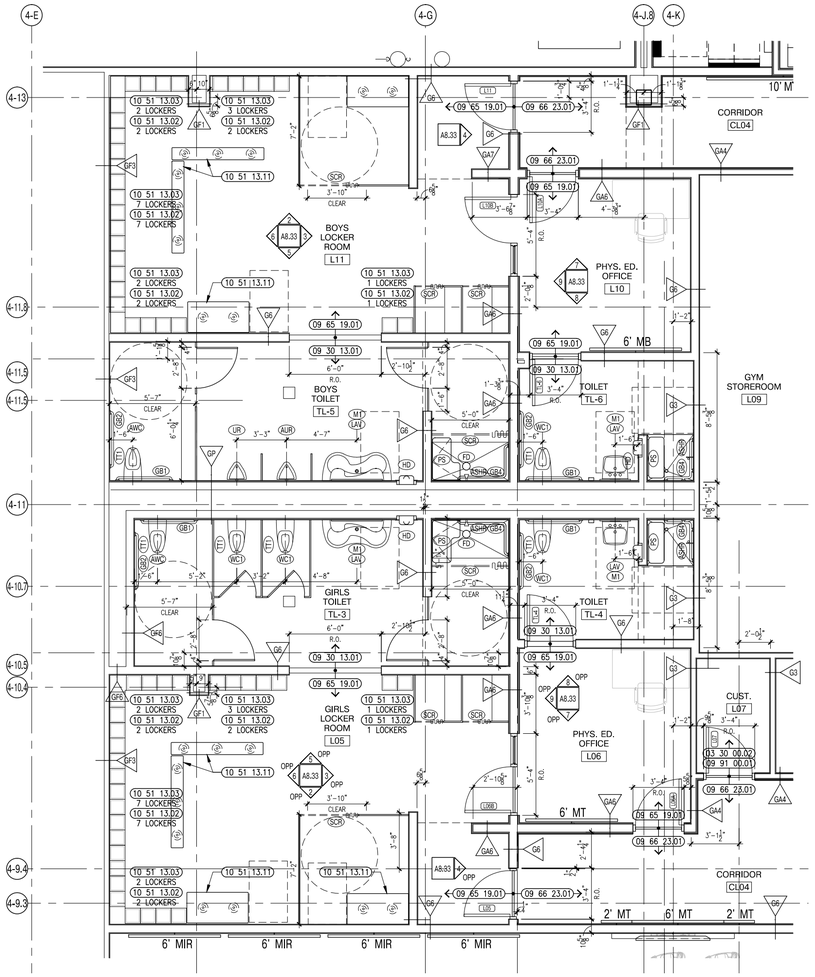

1 ENLARGED LOCKER ROOM PLAN
1/4" = 1'-0"

A13 architects
526 Boston Post Rd Wayland, MA
508.358.0790 www.a13architects.com

BEVERLY MIDDLE SCHOOL

CABOT STREET
BEVERLY, MA 01915

Copyright © 2016 A13 Architects, LLC

KEYNOTE LEGEND: (REFERENCE SHEETS A0.01 & A0.02 FOR MASTER KEYNOTE LIST AND KEYNOTES NOT LISTED)

03 30 00.02	CONCRETE SLAB ON GRADE – SEE STRUCTURAL
06 40 00.11	3D WOOD WALL PANELS – MAPLE
08 11 13.01	DOOR AND FRAME– SEE DOOR SCHEDULE
08 14 16.01	SOLID CORE FLUSH WOOD DOOR– SEE DOOR SCHEDULE
08 33 13.01	TYPE OCC1 – INTERIOR – 4'–6"W x 4'–0"H – MANUALLY OPERATED – HARDWOOD FINISH
09 29 00.99	GYPSUM BOARD SYSTEM – LEVEL 4 FINISH – REFER TO FLOOR PLANS AND WALL TYPES FOR COMPONENTS
09 30 13.01	CERAMIC MOSAIC FLOOR TILE
09 65 13.01	RUBBER BASE – 4"
09 65 19.01	VINYL COMPOSITION TILE
09 65 23.02	RUBBER FLOOR TILE – HAMMERED PROFILE
09 66 23.01	RESINOUS MATRIX TERRAZZO FLOORING
09 91 00.01	PAINT – SEE SCHEDULE
10 51 13.02	METAL LOCKER – SLOPED TOP – TYPE 2
10 51 13.03	METAL LOCKER – SLOPED TOP – TYPE 3
10 51 13.10	METAL FILLER PANEL – EACH SIDE OF LOCKER BANK TO CENTER LOCKERS IN OPENING
10 51 13.11	LOCKER ROOM BENCH
12 30 00.21	PLASTIC LAMINATE BACKSPLASH – 4 INCH
12 30 00.25	PLASTIC LAMINATE COUNTERTOP – HIGH WEAR
27 10 00.11	TELEPHONE JACK – SEE TECHNOLOGY – TELEPHONE DEVICE TO BE OWNER FURNISHED AND INSTALLED
27 50 00.11	CLOCK – SEE TECHNOLOGY

90% CONSTRUCTION DOCUMENTS

NOT FOR CONSTRUCTION

NORTH ARROW

KEYPLAN

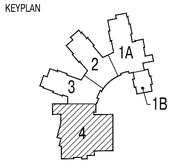

DRAWING NAME:
ENLARGED LOCKER ROOM PLANS

DRAWN BY: JMR / ETF
REVIEWED BY: BPH
SCALE: As Noted
JOB NO.: 1403.00
DATE: July 25, 2016
DRAWING NUMBER: A8.33

PAVER TILE LEGEND

TYPE	GRAPHIC
TYPE 1	
TYPE 2	

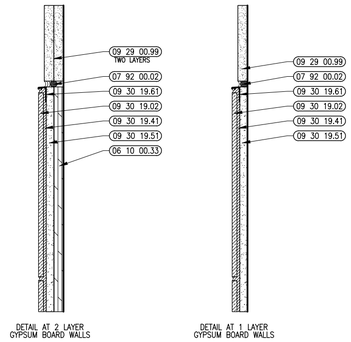

3 CORRIDOR TILE CAP SECTION DETAIL
3" = 1'-0"

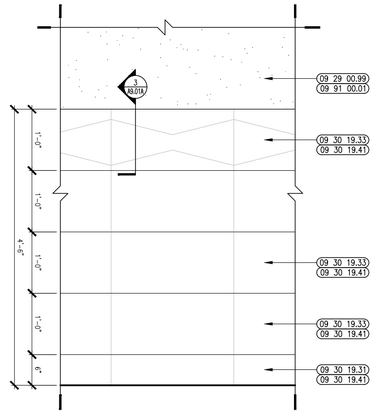

2 ENLARGED TILE PATTERN
1" = 1'-0"

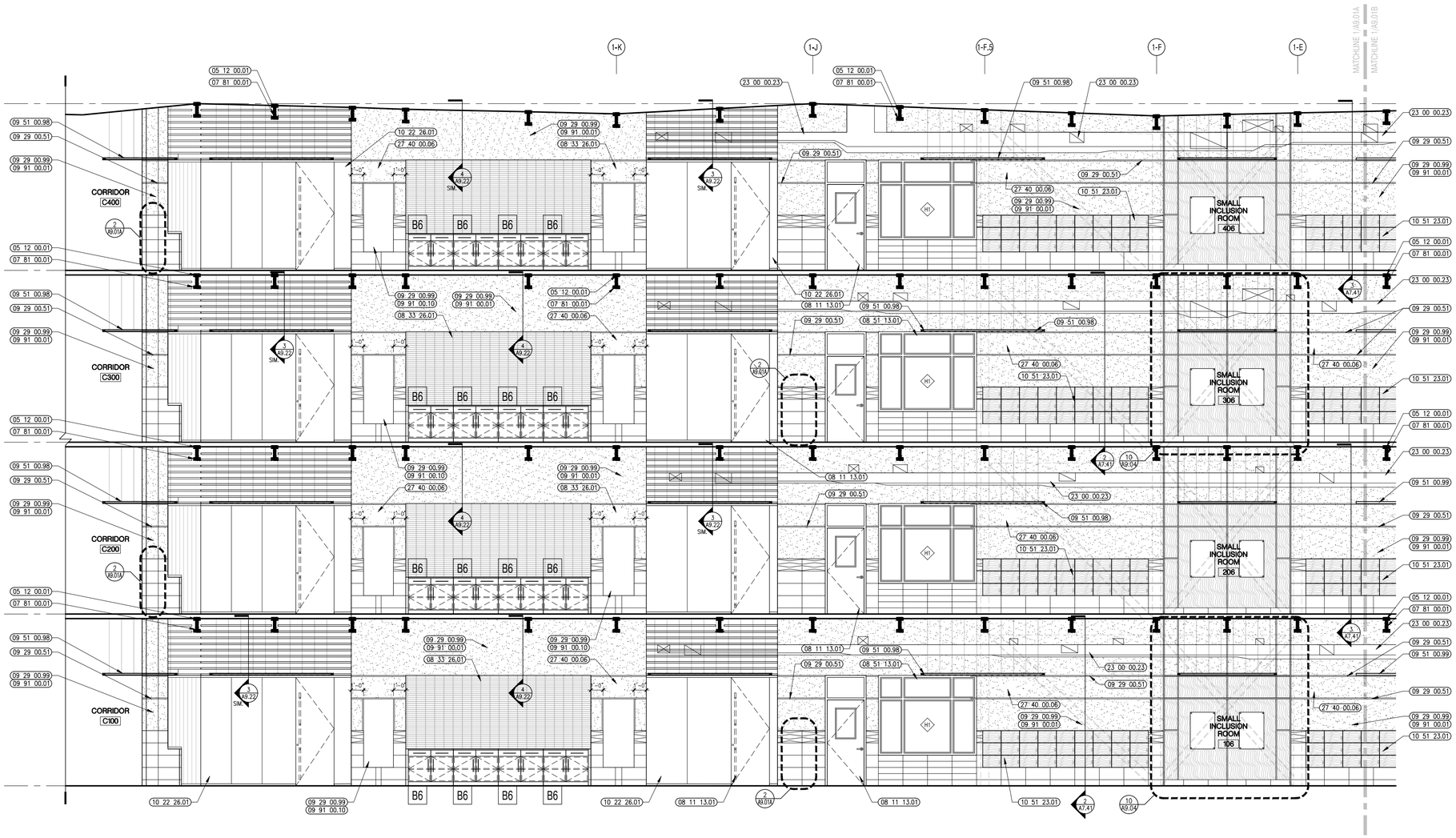

1 CORRIDOR C101, C201, 301, 401
1/4" = 1'-0"

Ai3 architects
526 Boston Post Rd Wayland, MA
508.358.0790 www.ai3architects.com

BEVERLY MIDDLE SCHOOL

CABOT STREET
BEVERLY, MA 01915

Copyright © 2016 Ai3 Architects, LLC

KEYNOTE LEGEND: (REFERENCE SHEETS A0.01 & A0.02 FOR MASTER KEYNOTE LIST AND KEYNOTES NOT LISTED)

05 12 00.01	STEEL BEAM – SEE STRUCTURAL
06 10 00.33	PLYWOOD – 5/8 INCH
07 81 00.01	CEMENTITIOUS FIREPROOFING
07 92 00.02	BACKER ROD AND SEALANT – TYPE AS REQUIRED
08 11 13.01	DOOR AND FRAME– SEE DOOR SCHEDULE
08 33 26.01	OVERHEAD COILING GRILLE – TYPE 1 – 16'-0"W x 6'-6"H
08 51 13.01	ALUMINUM WINDOW – SEE SCHEDULE
09 29 00.51	ALUMINUM REVEAL TRIM – SATIN FINISH – 1 INCH
09 29 00.99	GYPSUM BOARD SYSTEM – LEVEL 4 FINISH – REFER TO FLOOR PLANS AND WALL TYPES FOR COMPONENTS
09 30 19.02	PORCELAIN WALL TILE
09 30 19.31	PORCELAIN WALL TILE – 6" x 24"
09 30 19.33	PORCELAIN WALL TILE – 12" x 24"
09 30 19.41	THIN SET TILE SETTING BED
09 30 19.51	CEMENTITIOUS BACKING BOARD
09 30 19.61	ALUMINUM CORNER TRIM
09 51 00.98	WOOD VENEER CEILING SYSTEM – REFERENCE REFLECTED CEILING PLANS FOR TYPE AND HEIGHT
09 51 00.99	ACOUSTICAL CEILING – REFERENCE REFLECTED CEILING PLANS FOR TYPE AND HEIGHT
09 91 00.01	PAINT – SEE SCHEDULE
09 91 00.10	DRY ERASE PAINT
10 22 26.01	INTERIOR OPERABLE GLASS PARTITION PANEL
10 51 23.01	PHENOLIC LOCKER – RECESSED – TYPE 1
23 00 00.23	DUCT – SEE HVAC
27 40 00.06	SPEAKER – SEE TECHNOLOGY

GENERAL NOTES:

1. NOT ALL POWER AND DATA OUTLET/SWITCHING LOCATIONS SHOWN. COORDINATE WITH ELECTRICAL AND TECHNOLOGY DRAWINGS FOR ALL LOCATIONS.
2. REFER TO DETAIL 2/A7.31 FOR FIRE EXTINGUISHER DETAILS AND MOUNTING HEIGHTS.

90% CONSTRUCTION DOCUMENTS

NOT FOR CONSTRUCTION

NORTH ARROW

KEYPLAN

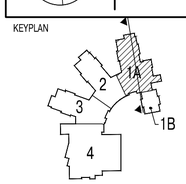

DRAWING NAME:

CLASSROOM CORRIDOR ELEVATIONS

DRAWN BY:	MJR
REVIEWED BY:	BPH
SCALE: As Noted	DRAWING NUMBER:
JOB NO.: 1403.00	A9.01A
DATE: July 25, 2016	

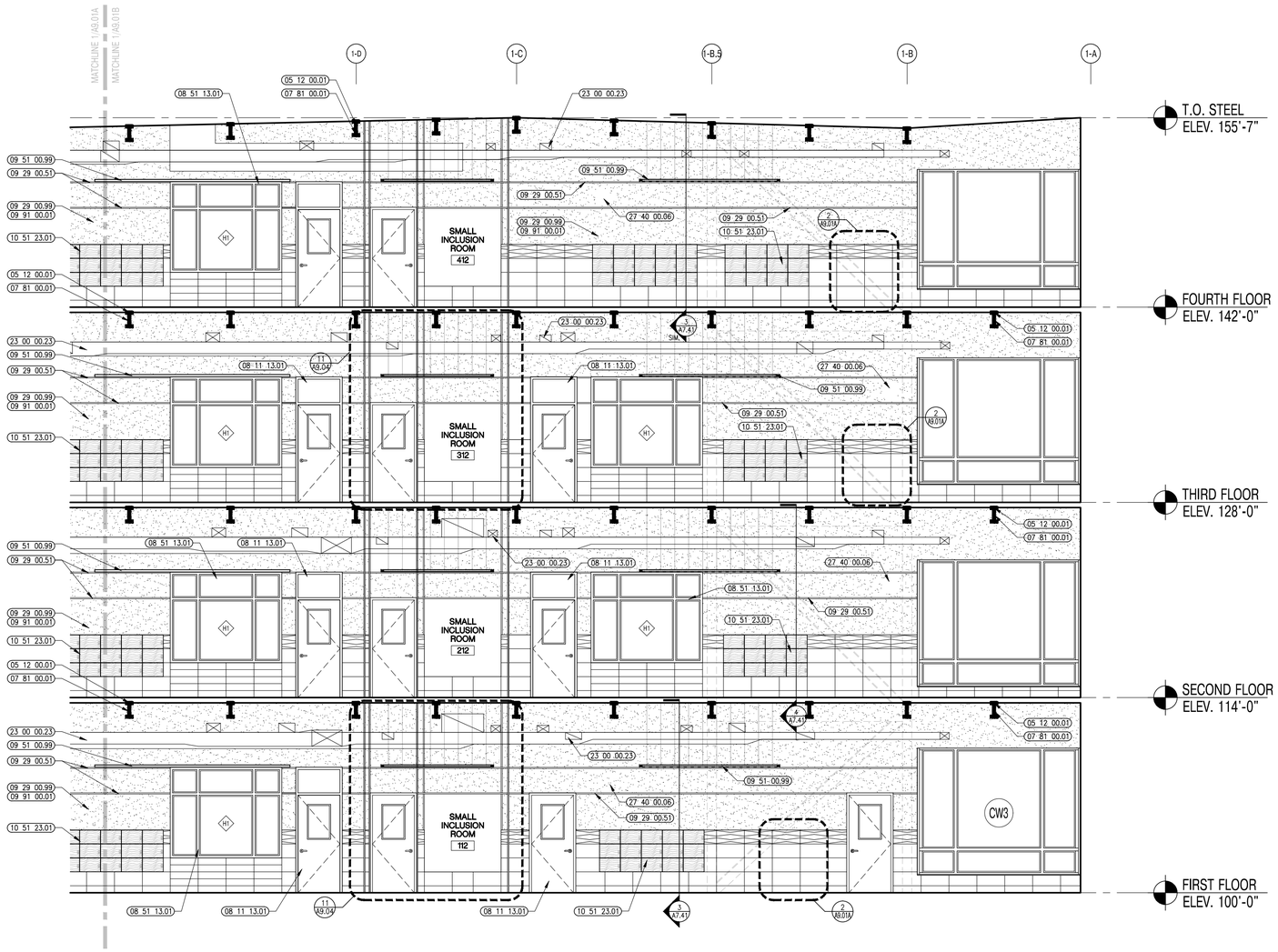

1 CORRIDOR C101, C201, C301, C401
1/4" = 1'-0"

526 Boston Post Rd Wayland, MA
508.358.0790 www.ai3architects.com

BEVERLY MIDDLE SCHOOL

CABOT STREET
BEVERLY, MA 01915

Copyright © 2016 Ai3 Architects, LLC

KEYNOTE LEGEND: (REFERENCE SHEETS A0.01 & A0.02 FOR MASTER KEYNOTE LIST AND KEYNOTES NOT LISTED)

05 12 00.01	STEEL BEAM – SEE STRUCTURAL
07 81 00.01	CEMENTITIOUS FIREPROOFING
08 11 13.01	DOOR AND FRAME– SEE DOOR SCHEDULE
08 51 13.01	ALUMINUM WINDOW – SEE SCHEDULE
09 29 00.51	ALUMINUM REVEAL TRIM – SATIN FINISH – 1 INCH
09 29 00.99	GYPSUM BOARD SYSTEM – LEVEL 4 FINISH – REFER TO FLOOR PLANS AND WALL TYPES FOR COMPONENTS
09 51 00.99	ACOUSTICAL CEILING – REFERENCE REFLECTED CEILING PLANS FOR TYPE AND HEIGHT
09 91 00.01	PAINT – SEE SCHEDULE
10 51 23.01	PHENOLIC LOCKER – RECESSED – TYPE 1
23 00 00.23	DUCT – SEE HVAC
27 40 00.06	SPEAKER – SEE TECHNOLOGY

GENERAL NOTES:

1. NOT ALL POWER AND DATA OUTLET/SWITCHING LOCATIONS SHOWN. COORDINATE WITH ELECTRICAL AND TECHNOLOGY DRAWINGS FOR ALL LOCATIONS.
2. REFER TO DETAIL 2/A7.31 FOR FIRE EXTINGUISHER DETAILS AND MOUNTING HEIGHTS.

90% CONSTRUCTION DOCUMENTS

NOT FOR CONSTRUCTION

NORTH ARROW

KEYPLAN

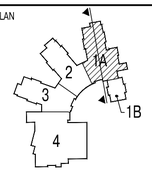

DRAWING NAME:

CLASSROOM CORRIDOR ELEVATIONS

DRAWN BY:	MJR
REVIEWED BY:	BPH
SCALE:	As Noted
JOB NO.:	1403.00
DATE:	July 25, 2016
DRAWING NUMBER:	A9.01B

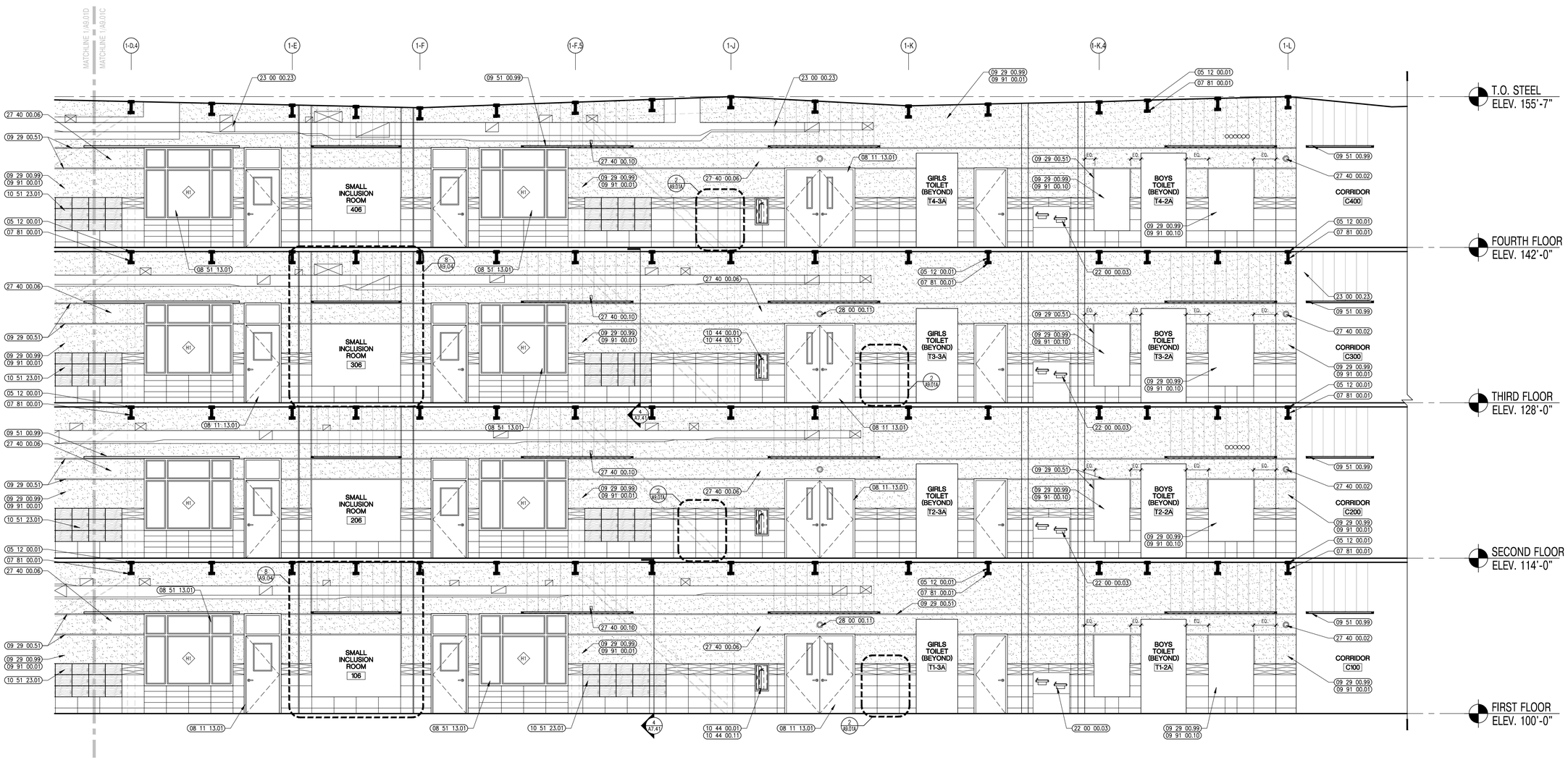

1 CORRIDOR C101, C201, C301, C401
1/4" = 1'-0"

526 Boston Post Rd Wayland, MA
508.358.0790 www.ai3architects.com

BEVERLY MIDDLE SCHOOL

CABOT STREET
BEVERLY, MA 01915

Copyright © 2016 AI3 Architects, LLC

KEYNOTE LEGEND: (REFERENCE SHEETS A0.01 & A0.02 FOR MASTER KEYNOTE LIST AND KEYNOTES NOT LISTED)

05 12 00.01	STEEL BEAM – SEE STRUCTURAL
07 81 00.01	CEMENTITIOUS FIREPROOFING
08 11 13.01	DOOR AND FRAME– SEE DOOR SCHEDULE
08 51 13.01	ALUMINUM WINDOW – SEE SCHEDULE
09 29 00.51	ALUMINUM REVEAL TRIM – SATIN FINISH – 1 INCH
09 29 00.99	GYPSUM BOARD SYSTEM – LEVEL 4 FINISH – REFER TO FLOOR PLANS AND WALL TYPES FOR COMPONENTS
09 51 00.99	ACOUSTICAL CEILING – REFERENCE REFLECTED CEILING PLANS FOR TYPE AND HEIGHT
09 91 00.01	PAINT – SEE SCHEDULE
09 91 00.10	DRY ERASE PAINT
10 44 00.01	FIRE EXTINGUISHER CABINET – FULLY RECESSED
10 44 00.11	FIRE EXTINGUISHER
10 51 23.01	PHENOLIC LOCKER – RECESSED – TYPE 1
22 00 00.03	WATER FOUNTAIN – SEE PLUMBING
23 00 00.23	DUCT – SEE HVAC
27 40 00.02	CAMERA – SEE TECHNOLOGY
27 40 00.06	SPEAKER – SEE TECHNOLOGY
27 40 00.10	FACE PLATE – SEE TECHNOLOGY
28 00 00.11	MOTION SENSOR – SEE TECHNOLOGY

GENERAL NOTES:

1. NOT ALL POWER AND DATA OUTLET/SWITCHING LOCATIONS SHOWN. COORDINATE WITH ELECTRICAL AND TECHNOLOGY DRAWINGS FOR ALL LOCATIONS.
2. REFER TO DETAIL 2/A7.31 FOR FIRE EXTINGUISHER DETAILS AND MOUNTING HEIGHTS.

90% CONSTRUCTION DOCUMENTS

NOT FOR CONSTRUCTION

NORTH ARROW

KEYPLAN

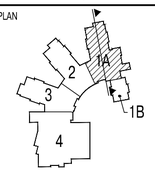

DRAWING NAME:

CLASSROOM CORRIDOR ELEVATIONS

DRAWN BY:	MJR
REVIEWED BY:	BPH
SCALE: As Noted	DRAWING NUMBER:
JOB NO.: 1403.00	A9.01C
DATE: July 25, 2016	

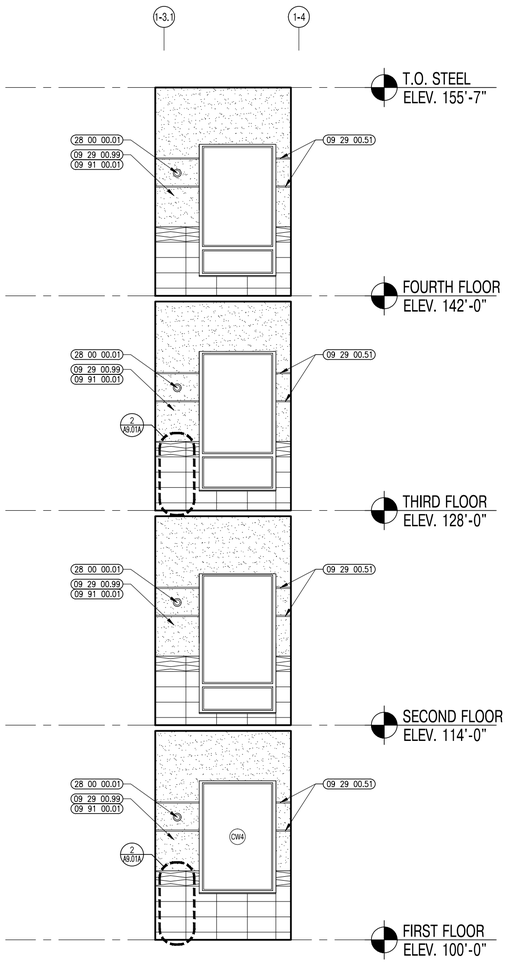

2 CORRIDOR C101, C201, C301, C401
1/4" = 1'-0"

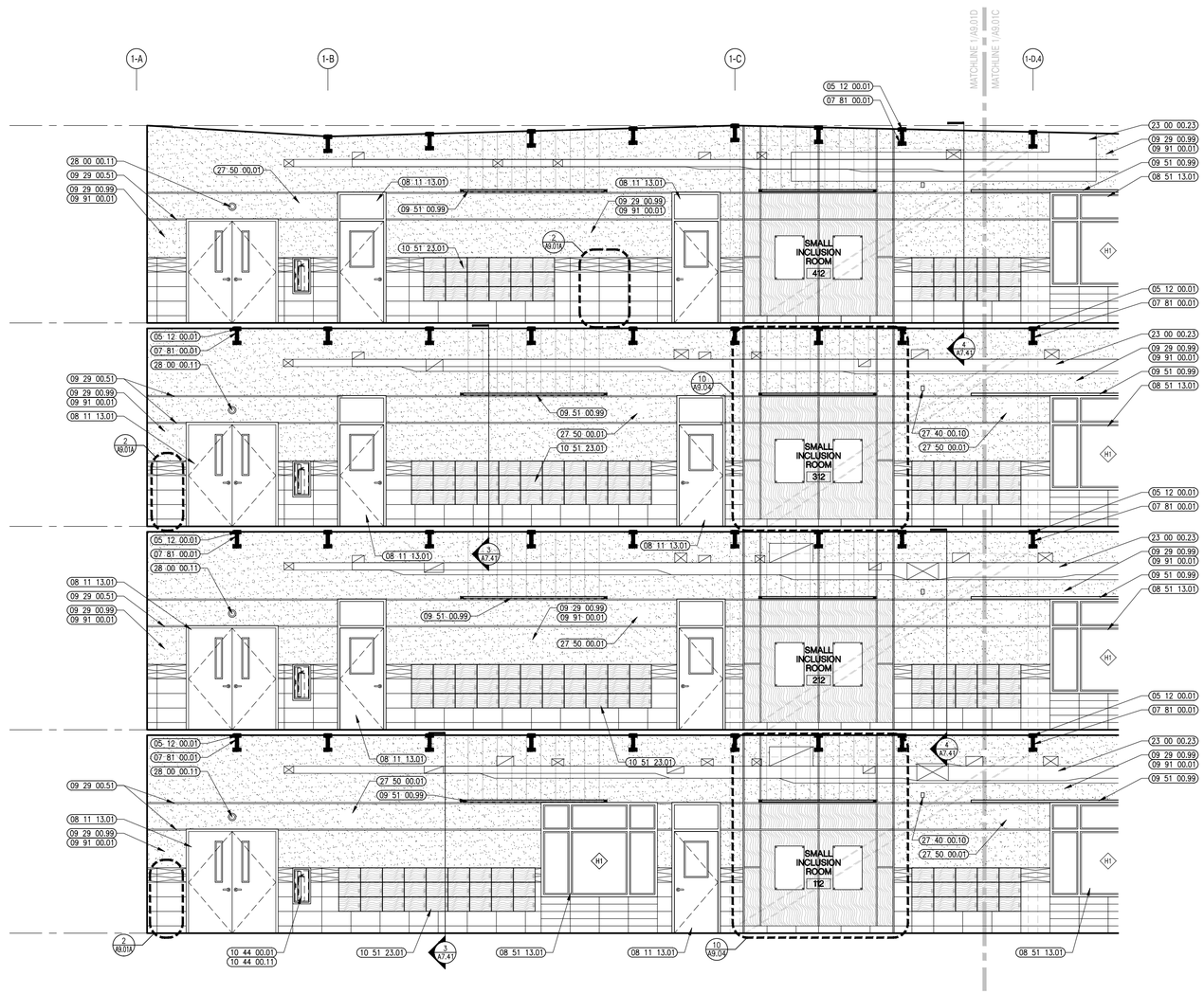

1 CORRIDOR C101, C201, C301, C401
1/4" = 1'-0"

A13 architects
526 Boston Post Rd Wayland, MA
508.358.0790 www.a13architects.com

BEVERLY MIDDLE SCHOOL

CABOT STREET
BEVERLY, MA 01915

Copyright © 2016 A13 Architects, LLC

KEYNOTE LEGEND: (REFERENCE SHEETS A0.01 & A0.02 FOR MASTER KEYNOTE LIST AND KEYNOTES NOT LISTED)

05 12 00.01	STEEL BEAM – SEE STRUCTURAL
07 81 00.01	CEMENTITIOUS FIREPROOFING
08 11 13.01	DOOR AND FRAME– SEE DOOR SCHEDULE
08 51 13.01	ALUMINUM WINDOW – SEE SCHEDULE
09 29 00.51	ALUMINUM REVEAL TRIM – SATIN FINISH – 1 INCH
09 29 00.99	GYPSUM BOARD SYSTEM – LEVEL 4 FINISH – REFER TO FLOOR PLANS AND WALL TYPES FOR COMPONENTS
09 51 00.99	ACOUSTICAL CEILING – REFERENCE REFLECTED CEILING PLANS FOR TYPE AND HEIGHT
09 91 00.01	PAINT – SEE SCHEDULE
10 44 00.01	FIRE EXTINGUISHER CABINET – FULLY RECESSED
10 44 00.11	FIRE EXTINGUISHER
10 51 23.01	PHENOLIC LOCKER – RECESSED – TYPE 1
23 00 00.23	DUCT – SEE HVAC
27 40 00.10	FACE PLATE – SEE TECHNOLOGY
27 50 00.01	SPEAKER – SEE TECHNOLOGY
28 00 00.01	CAMERA – SEE TECHNOLOGY
28 00 00.11	MOTION SENSOR – SEE TECHNOLOGY

GENERAL NOTES:

1. NOT ALL POWER AND DATA OUTLET/SWITCHING LOCATIONS SHOWN. COORDINATE WITH ELECTRICAL AND TECHNOLOGY DRAWINGS FOR ALL LOCATIONS.
2. REFER TO DETAIL 2/A7.31 FOR FIRE EXTINGUISHER DETAILS AND MOUNTING HEIGHTS.

90% CONSTRUCTION DOCUMENTS

NOT FOR CONSTRUCTION

NORTH ARROW

KEYPLAN

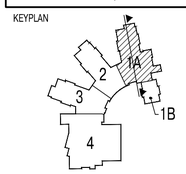

DRAWING NAME:

CLASSROOM CORRIDOR ELEVATIONS

DRAWN BY:	MJR
REVIEWED BY:	BPH
SCALE:	As Noted
JOB NO.:	1403.00
DATE:	July 25, 2016
DRAWING NUMBER:	A9.01D

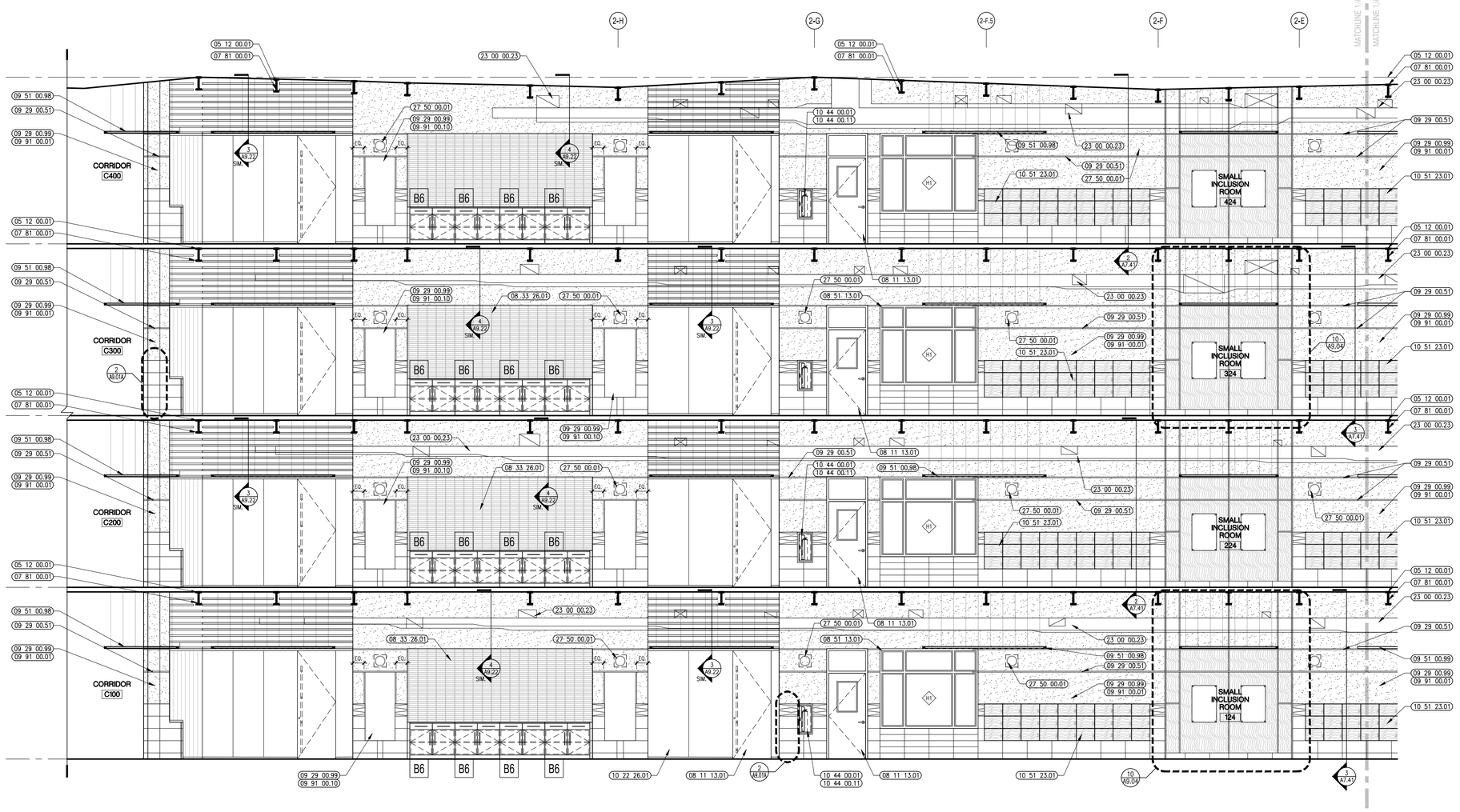

1 CORRIDOR C102, C202, 302, 402
1/4" = 1'-0"

526 Boston Post Rd Wayland, MA
508.358.0790 www.ai3architects.com

BEVERLY MIDDLE SCHOOL

CABOT STREET
BEVERLY, MA 01915

Copyright © 2016 Ai3 Architects, LLC

KEYNOTE LEGEND: (REFERENCE SHEETS A0.01 & A0.02 FOR MASTER KEYNOTE LIST AND KEYNOTES NOT LISTED)

05 12 00.01	STEEL BEAM – SEE STRUCTURAL
07 81 00.01	CEMENTITIOUS FIREPROOFING
08 11 13.01	DOOR AND FRAME– SEE DOOR SCHEDULE
08 33 26.01	OVERHEAD COILING GRILLE – TYPE 1 – 16'–0"W x 6'–6"H
08 51 13.01	ALUMINUM WINDOW – SEE SCHEDULE
09 29 00.51	ALUMINUM REVEAL TRIM – SATIN FINISH – 1 INCH
09 29 00.99	GYPSUM BOARD SYSTEM – LEVEL 4 FINISH – REFER TO FLOOR PLANS AND WALL TYPES FOR COMPONENTS
09 51 00.98	WOOD VENEER CEILING SYSTEM – REFERENCE REFLECTED CEILING PLANS FOR TYPE AND HEIGHT
09 51 00.99	ACOUSTICAL CEILING – REFERENCE REFLECTED CEILING PLANS FOR TYPE AND HEIGHT
09 91 00.01	PAINT – SEE SCHEDULE
09 91 00.10	DRY ERASE PAINT
10 22 26.01	INTERIOR OPERABLE GLASS PARTITION PANEL
10 44 00.01	FIRE EXTINGUISHER CABINET – FULLY RECESSED
10 44 00.11	FIRE EXTINGUISHER
10 51 23.01	PHENOLIC LOCKER – RECESSED – TYPE 1
23 00 00.23	DUCT – SEE HVAC
27 50 00.01	SPEAKER – SEE TECHNOLOGY

GENERAL NOTES:

1. NOT ALL POWER AND DATA OUTLET/SWITCHING LOCATIONS SHOWN. COORDINATE WITH ELECTRICAL AND TECHNOLOGY DRAWINGS FOR ALL LOCATIONS.
2. REFER TO DETAIL 2/A7.31 FOR FIRE EXTINGUISHER DETAILS AND MOUNTING HEIGHTS.

90% CONSTRUCTION DOCUMENTS

NOT FOR CONSTRUCTION

NORTH ARROW

KEYPLAN

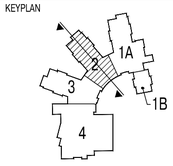

DRAWING NAME:

CLASSROOM CORRIDOR ELEVATIONS

DRAWN BY:	MJR
REVIEWED BY:	BPH
SCALE:	As Noted
JOB NO.:	1403.00
DATE:	July 25, 2016
DRAWING NUMBER:	A9.02A

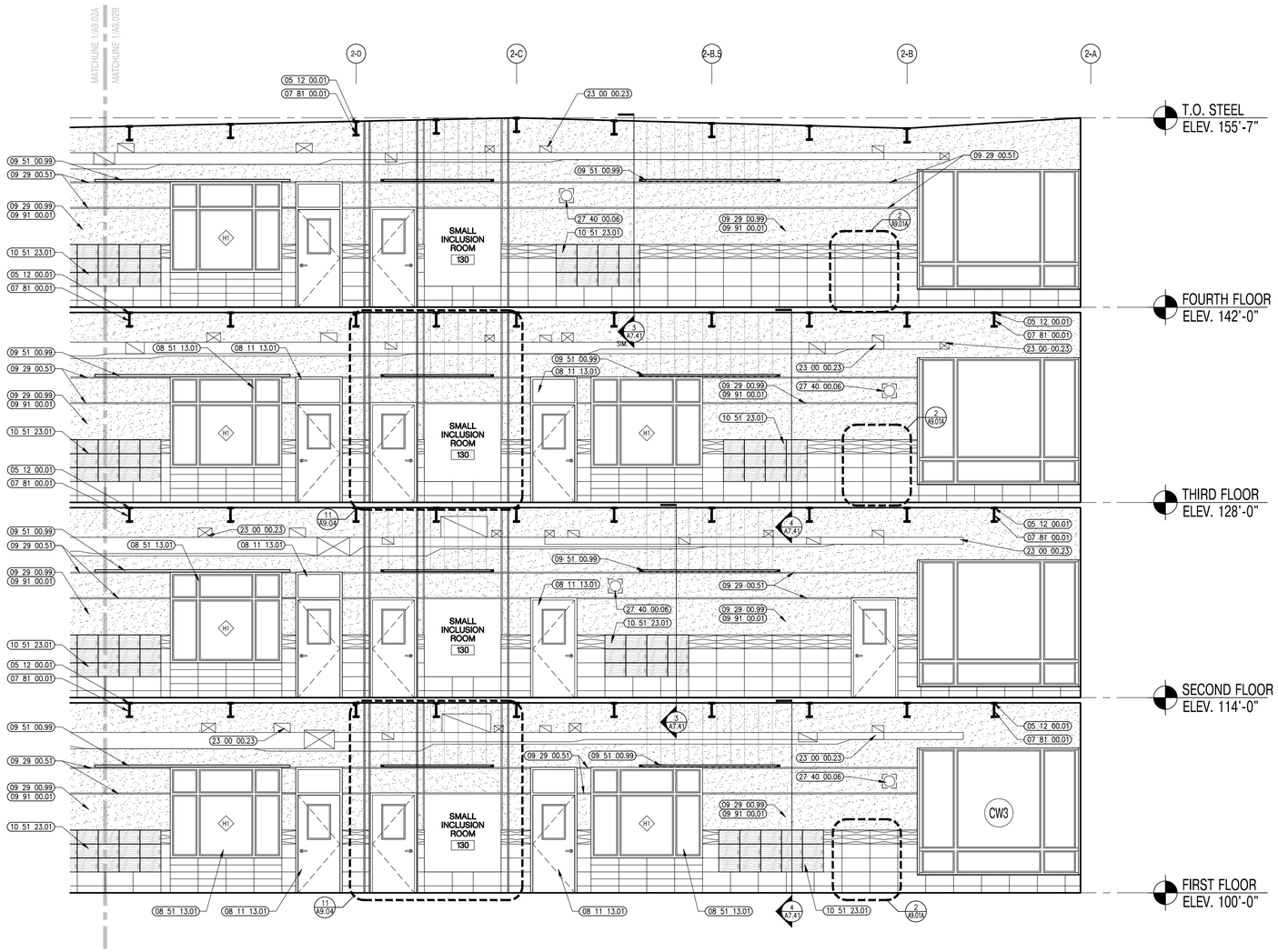

1 CORRIDOR C102, C202, C302, C402
1/4" = 1'-0"

526 Boston Post Rd Wayland, MA
508.358.0790 www.ai3architects.com

BEVERLY MIDDLE SCHOOL

CABOT STREET
BEVERLY, MA 01915

Copyright © 2016 Ai3 Architects, LLC

KEYNOTE LEGEND: (REFERENCE SHEETS A0.01 & A0.02 FOR MASTER KEYNOTE LIST AND KEYNOTES NOT LISTED)

05 12 00.01	STEEL BEAM – SEE STRUCTURAL
07 81 00.01	CEMENTITIOUS FIREPROOFING
08 11 13.01	DOOR AND FRAME– SEE DOOR SCHEDULE
08 51 13.01	ALUMINUM WINDOW – SEE SCHEDULE
09 29 00.51	ALUMINUM REVEAL TRIM – SATIN FINISH – 1 INCH
09 29 00.99	GYPSUM BOARD SYSTEM – LEVEL 4 FINISH – REFER TO FLOOR PLANS AND WALL TYPES FOR COMPONENTS
09 51 00.99	ACOUSTICAL CEILING – REFERENCE REFLECTED CEILING PLANS FOR TYPE AND HEIGHT
09 91 00.01	PAINT – SEE SCHEDULE
10 51 23.01	PHENOLIC LOCKER – RECESSED – TYPE 1
23 00 00.23	DUCT – SEE HVAC
27 40 00.06	SPEAKER – SEE TECHNOLOGY

GENERAL NOTES:

1. NOT ALL POWER AND DATA OUTLET/SWITCHING LOCATIONS SHOWN. COORDINATE WITH ELECTRICAL AND TECHNOLOGY DRAWINGS FOR ALL LOCATIONS.
2. REFER TO DETAIL 2/A7.31 FOR FIRE EXTINGUISHER DETAILS AND MOUNTING HEIGHTS.

90% CONSTRUCTION DOCUMENTS

NOT FOR CONSTRUCTION

NORTH ARROW

KEYPLAN

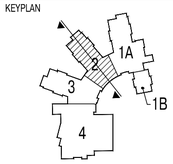

DRAWING NAME:

CLASSROOM CORRIDOR ELEVATIONS

DRAWN BY:	MJR
REVIEWED BY:	BPH
SCALE: As Noted	DRAWING NUMBER:
JOB NO.: 1403.00	A9.02B
DATE: July 25, 2016	

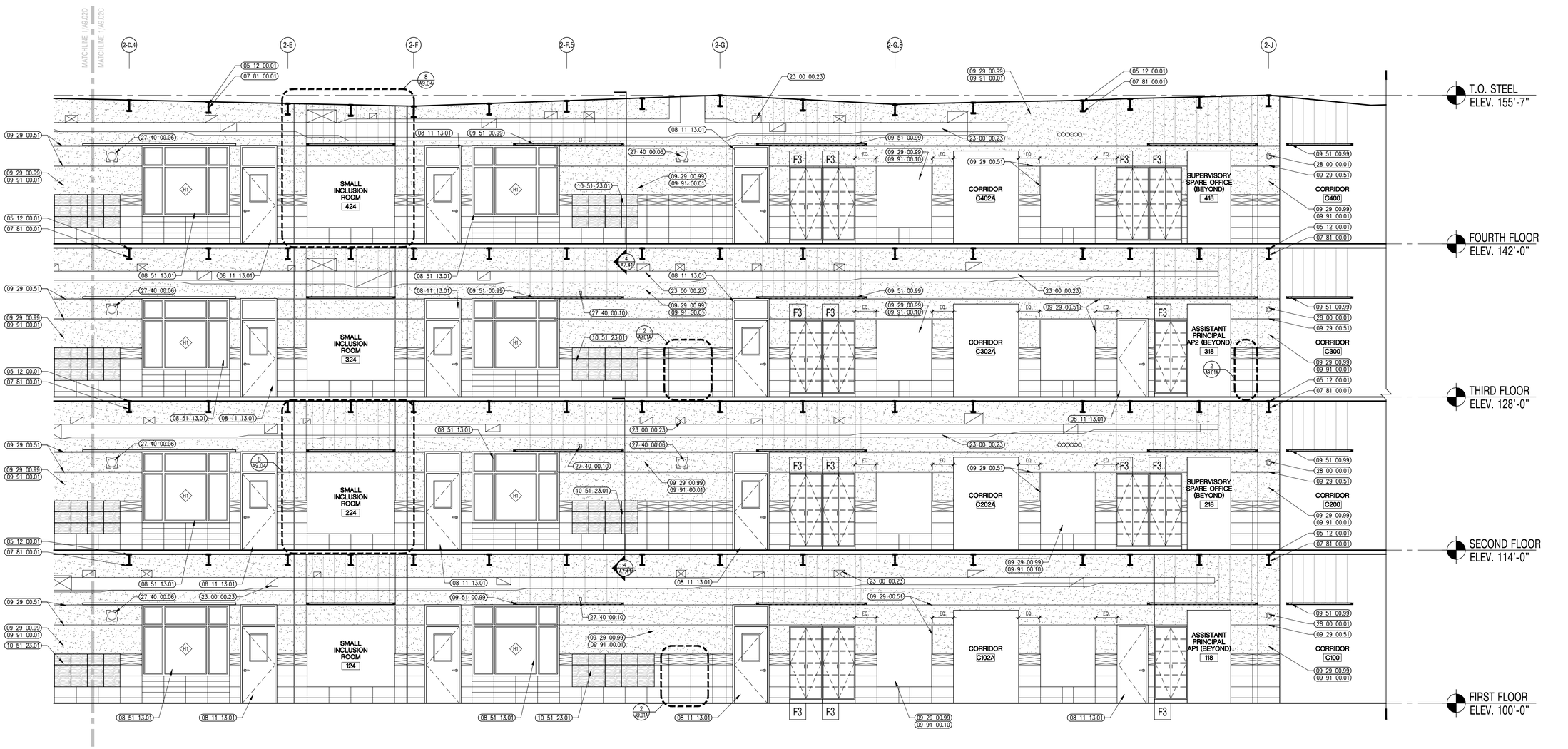

1 CORRIDOR C102, C202, C302, C402
1/4" = 1'-0"

526 Boston Post Rd Wayland, MA
508.358.0790 www.ai3architects.com

BEVERLY MIDDLE SCHOOL

CABOT STREET
BEVERLY, MA 01915

Copyright © 2016 Ai3 Architects, LLC

KEYNOTE LEGEND: (REFERENCE SHEETS A0.01 & A0.02 FOR MASTER KEYNOTE LIST AND KEYNOTES NOT LISTED)

05 12 00.01	STEEL BEAM – SEE STRUCTURAL
07 81 00.01	CEMENTITIOUS FIREPROOFING
08 11 13.01	DOOR AND FRAME– SEE DOOR SCHEDULE
08 51 13.01	ALUMINUM WINDOW – SEE SCHEDULE
09 29 00.51	ALUMINUM REVEAL TRIM – SATIN FINISH – 1 INCH
09 29 00.99	GYPSUM BOARD SYSTEM – LEVEL 4 FINISH – REFER TO FLOOR PLANS AND WALL TYPES FOR COMPONENTS
09 51 00.99	ACOUSTICAL CEILING – REFERENCE REFLECTED CEILING PLANS FOR TYPE AND HEIGHT
09 91 00.01	PAINT – SEE SCHEDULE
09 91 00.10	DRY ERASE PAINT
10 51 23.01	PHENOLIC LOCKER – RECESSED – TYPE 1
23 00 00.23	DUCT – SEE HVAC
27 40 00.06	SPEAKER – SEE TECHNOLOGY
27 40 00.10	FACE PLATE – SEE TECHNOLOGY
28 00 00.01	CAMERA – SEE TECHNOLOGY

GENERAL NOTES:

1. NOT ALL POWER AND DATA OUTLET/SWITCHING LOCATIONS SHOWN. COORDINATE WITH ELECTRICAL AND TECHNOLOGY DRAWINGS FOR ALL LOCATIONS.
2. REFER TO DETAIL 2/A7.31 FOR FIRE EXTINGUISHER DETAILS AND MOUNTING HEIGHTS.

90% CONSTRUCTION DOCUMENTS

NOT FOR CONSTRUCTION

NORTH ARROW

KEYPLAN

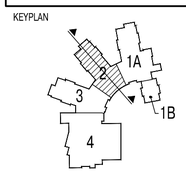

DRAWING NAME:

CLASSROOM CORRIDOR ELEVATIONS

DRAWN BY:	MJR
REVIEWED BY:	BPH
SCALE:	As Noted
JOB NO.:	1403.00
DATE:	July 25, 2016
DRAWING NUMBER:	A9.02C

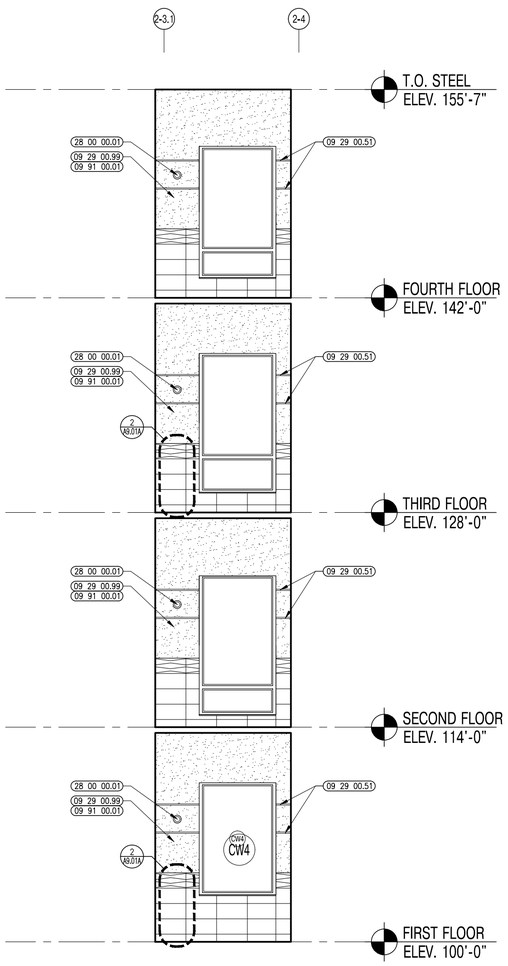

2 CORRIDOR C102, C202, C302, C402
1/4" = 1'-0"

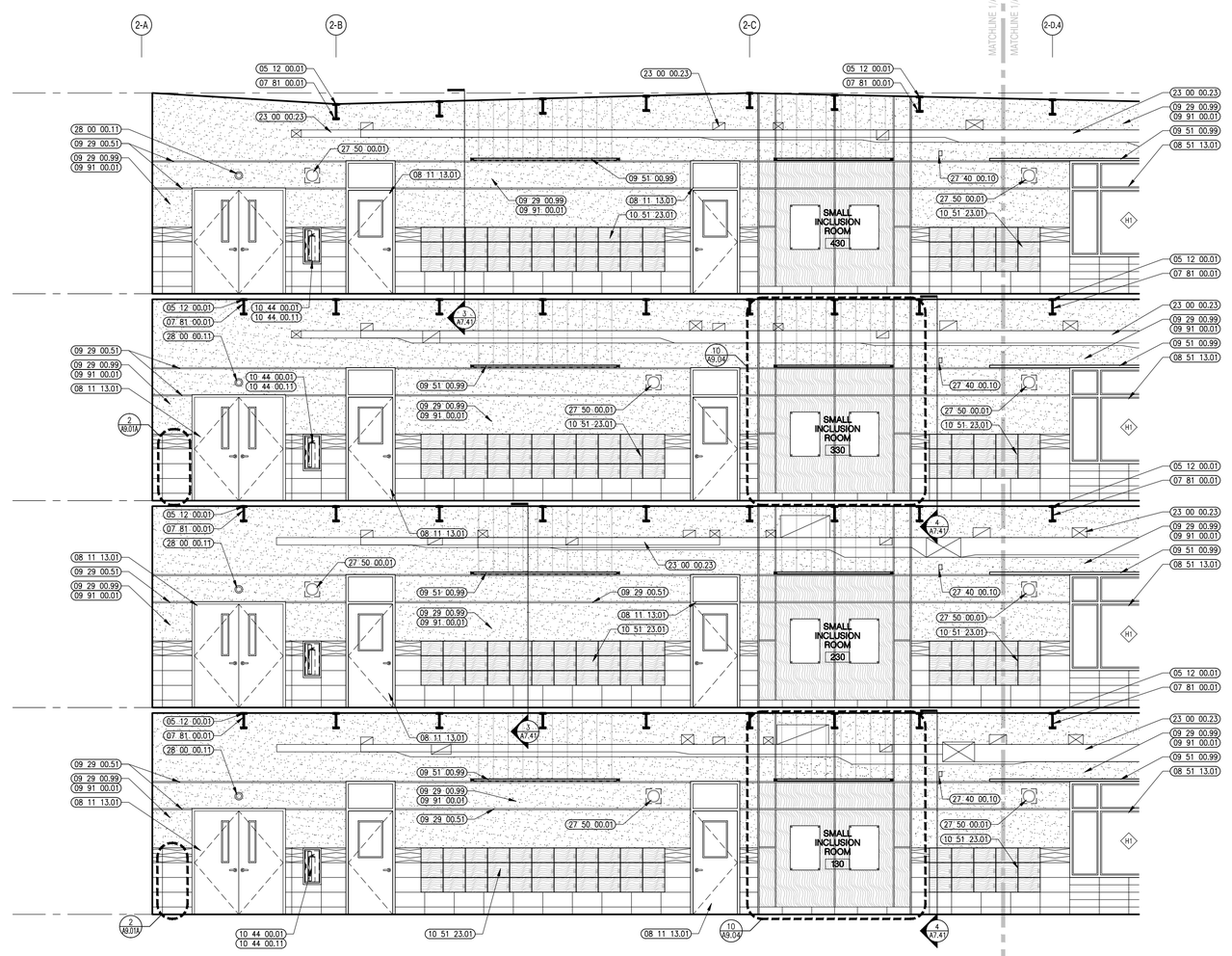

1 CORRIDOR C102, C202, C302, C402
1/4" = 1'-0"

526 Boston Post Rd Wayland, MA
508.358.0790 www.ai3architects.com

BEVERLY MIDDLE SCHOOL

CABOT STREET
BEVERLY, MA 01915

Copyright © 2016 Ai3 Architects, LLC

KEYNOTE LEGEND: (REFERENCE SHEETS A0.01 & A0.02 FOR MASTER KEYNOTE LIST AND KEYNOTES NOT LISTED)

05 12 00.01	STEEL BEAM – SEE STRUCTURAL
07 81 00.01	CEMENTITIOUS FIREPROOFING
08 11 13.01	DOOR AND FRAME– SEE DOOR SCHEDULE
08 51 13.01	ALUMINUM WINDOW – SEE SCHEDULE
09 29 00.51	ALUMINUM REVEAL TRIM – SATIN FINISH – 1 INCH
09 29 00.99	GYPSUM BOARD SYSTEM – LEVEL 4 FINISH – REFER TO FLOOR PLANS AND WALL TYPES FOR COMPONENTS
09 51 00.99	ACOUSTICAL CEILING – REFERENCE REFLECTED CEILING PLANS FOR TYPE AND HEIGHT
09 91 00.01	PAINT – SEE SCHEDULE
10 44 00.01	FIRE EXTINGUISHER CABINET – FULLY RECESSED
10 44 00.11	FIRE EXTINGUISHER
10 51 23.01	PHENOLIC LOCKER – RECESSED – TYPE 1
23 00 00.23	DUCT – SEE HVAC
27 40 00.10	FACE PLATE – SEE TECHNOLOGY
27 50 00.01	SPEAKER – SEE TECHNOLOGY
28 00 00.01	CAMERA – SEE TECHNOLOGY
28 00 00.11	MOTION SENSOR – SEE TECHNOLOGY

GENERAL NOTES:

1. NOT ALL POWER AND DATA OUTLET/SWITCHING LOCATIONS SHOWN. COORDINATE WITH ELECTRICAL AND TECHNOLOGY DRAWINGS FOR ALL LOCATIONS.
2. REFER TO DETAIL 2/A7.31 FOR FIRE EXTINGUISHER DETAILS AND MOUNTING HEIGHTS.

90% CONSTRUCTION DOCUMENTS

NOT FOR CONSTRUCTION

NORTH ARROW

KEYPLAN

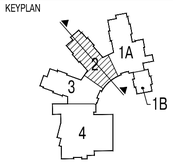

DRAWING NAME:

CLASSROOM CORRIDOR ELEVATIONS

DRAWN BY:	MJR
REVIEWED BY:	BPH
SCALE: As Noted	DRAWING NUMBER:
JOB NO.: 1403.00	A9.02D
DATE: July 25, 2016	

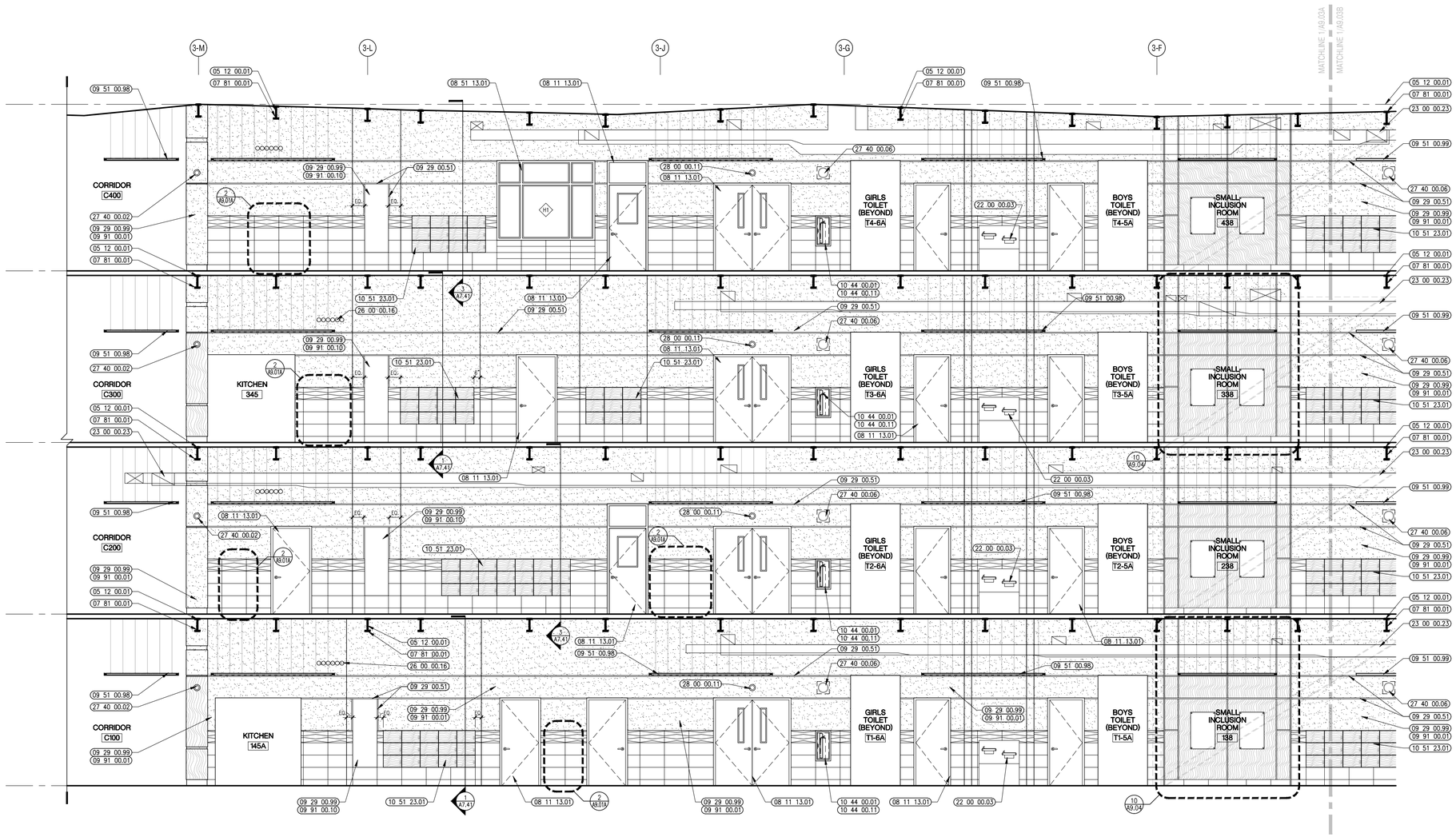

1 CORRIDOR C103, C203, 303, 403
1/4" = 1'-0"

Ai3 architects
526 Boston Post Rd Wayland, MA
508.358.0790 www.ai3architects.com

BEVERLY MIDDLE SCHOOL

CABOT STREET
BEVERLY, MA 01915

Copyright © 2016 Ai3 Architects, LLC

KEYNOTE LEGEND: (REFERENCE SHEETS A0.01 & A0.02 FOR MASTER KEYNOTE LIST AND KEYNOTES NOT LISTED)

05 12 00.01	STEEL BEAM – SEE STRUCTURAL
07 81 00.01	CEMENTITIOUS FIREPROOFING
08 11 13.01	DOOR AND FRAME– SEE DOOR SCHEDULE
08 51 13.01	ALUMINUM WINDOW – SEE SCHEDULE
09 29 00.51	ALUMINUM REVEAL TRIM – SATIN FINISH – 1 INCH
09 29 00.99	GYPSUM BOARD SYSTEM – LEVEL 4 FINISH – REFER TO FLOOR PLANS AND WALL TYPES FOR COMPONENTS
09 51 00.98	WOOD VENEER CEILING SYSTM – REFERENCE REFLECTED CEILING PLANS FOR TYPE AND HEIGHT
09 51 00.99	ACOUSTICAL CEILING – REFERENCE REFLECTED CEILING PLANS FOR TYPE AND HEIGHT
09 91 00.01	PAINT – SEE SCHEDULE
09 91 00.10	DRY ERASE PAINT
10 44 00.01	FIRE EXTINGUISHER CABINET – FULLY RECESSED
10 44 00.11	FIRE EXTINGUISHER
10 51 23.01	PHENOLIC LOCKER – RECESSED – TYPE 1
22 00 00.03	WATER FOUNTAIN – SEE PLUMBING
23 00 00.23	DUCT – SEE HVAC
26 00 00.16	ELECTRICAL CONDUIT – SEE ELECTRICAL
27 40 00.02	CAMERA – SEE TECHNOLOGY
27 40 00.06	SPEAKER – SEE TECHNOLOGY
28 00 00.11	MOTION SENSOR – SEE TECHNOLOGY

GENERAL NOTES:

1. NOT ALL POWER AND DATA OUTLET/SWITCHING LOCATIONS SHOWN. COORDINATE WITH ELECTRICAL AND TECHNOLOGY DRAWINGS FOR ALL LOCATIONS.
2. REFER TO DETAIL 2/A7.31 FOR FIRE EXTINGUISHER DETAILS AND MOUNTING HEIGHTS.

90% CONSTRUCTION DOCUMENTS

NOT FOR CONSTRUCTION

NORTH ARROW

KEYPLAN

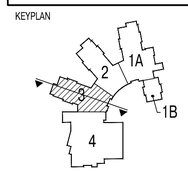

DRAWING NAME:

CLASSROOM CORRIDOR ELEVATIONS

DRAWN BY:	MJR
REVIEWED BY:	BPH
SCALE:	As Noted
JOB NO.:	1403.00
DATE:	July 25, 2016
DRAWING NUMBER:	A9.03A

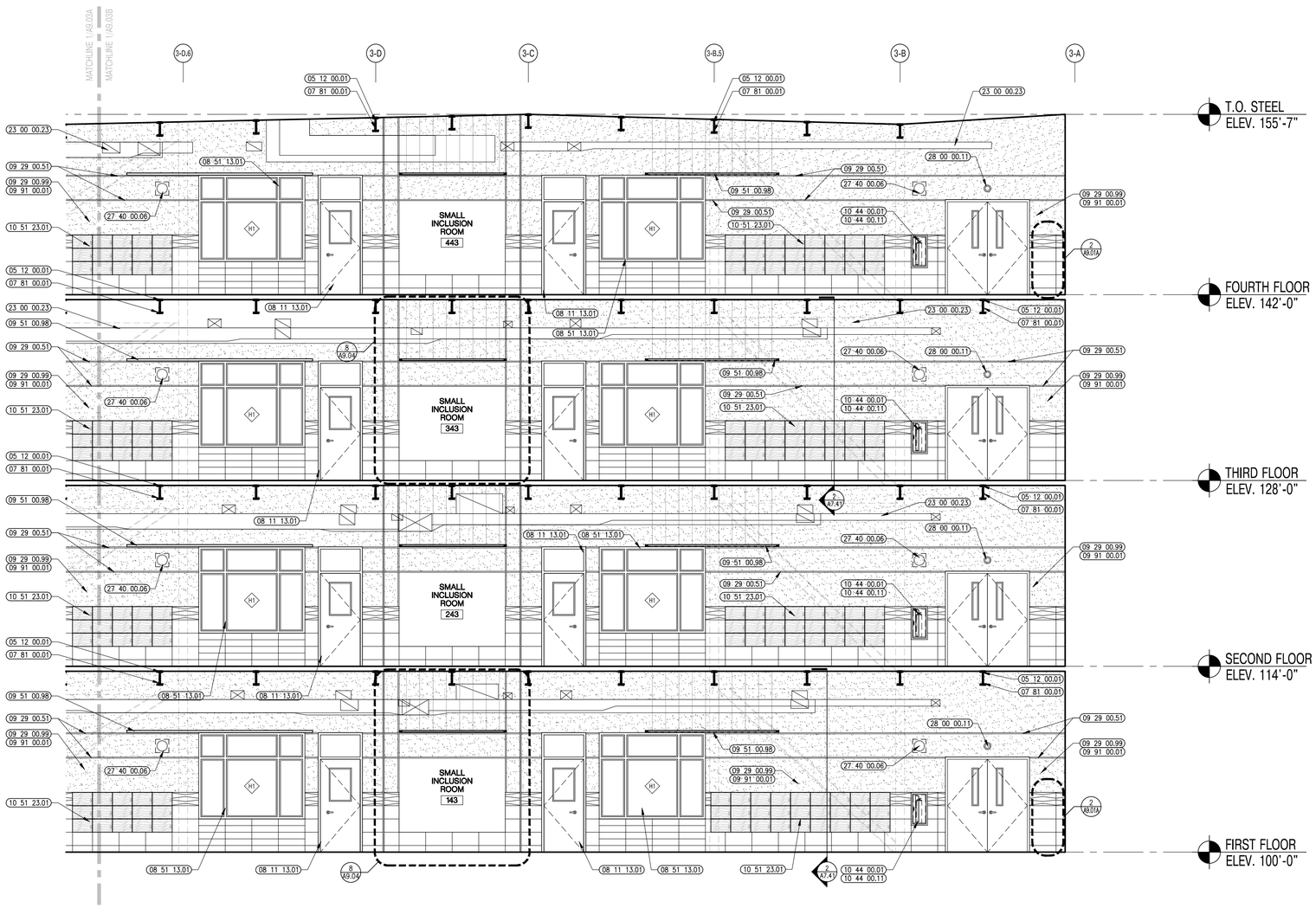

1 CORRIDOR C103, C203, C303, C403
1/4" = 1'-0"

526 Boston Post Rd Wayland, MA
508.358.0790 www.ai3architects.com

BEVERLY MIDDLE SCHOOL

CABOT STREET
BEVERLY, MA 01915

Copyright © 2016 Ai3 Architects, LLC

KEYNOTE LEGEND: (REFERENCE SHEETS A0.01 & A0.02 FOR MASTER KEYNOTE LIST AND KEYNOTES NOT LISTED)

05 12 00.01	STEEL BEAM – SEE STRUCTURAL
07 81 00.01	CEMENTITIOUS FIREPROOFING
08 11 13.01	DOOR AND FRAME– SEE DOOR SCHEDULE
08 51 13.01	ALUMINUM WINDOW – SEE SCHEDULE
09 29 00.51	ALUMINUM REVEAL TRIM – SATIN FINISH – 1 INCH
09 29 00.99	GYPSUM BOARD SYSTEM – LEVEL 4 FINISH – REFER TO FLOOR PLANS AND WALL TYPES FOR COMPONENTS
09 51 00.98	WOOD VENEER CEILING SYSTEM – REFERENCE REFLECTED CEILING PLANS FOR TYPE AND HEIGHT
09 91 00.01	PAINT – SEE SCHEDULE
10 44 00.01	FIRE EXTINGUISHER CABINET – FULLY RECESSED
10 44 00.11	FIRE EXTINGUISHER
10 51 23.01	PHENOLIC LOCKER – RECESSED – TYPE 1
23 00 00.23	DUCT – SEE HVAC
27 40 00.06	SPEAKER – SEE TECHNOLOGY
28 00 00.11	MOTION SENSOR – SEE TECHNOLOGY

GENERAL NOTES:

1. NOT ALL POWER AND DATA OUTLET/SWITCHING LOCATIONS SHOWN. COORDINATE WITH ELECTRICAL AND TECHNOLOGY DRAWINGS FOR ALL LOCATIONS.
2. REFER TO DETAIL 2/A7.31 FOR FIRE EXTINGUISHER DETAILS AND MOUNTING HEIGHTS.

90% CONSTRUCTION DOCUMENTS

NOT FOR CONSTRUCTION

NORTH ARROW

KEYPLAN

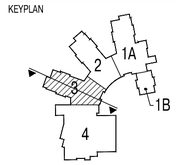

DRAWING NAME:

CLASSROOM CORRIDOR ELEVATIONS

DRAWN BY:	MJR
REVIEWED BY:	BPH
SCALE:	As Noted
JOB NO.:	1403.00
DATE:	July 25, 2016
DRAWING NUMBER:	A9.03B

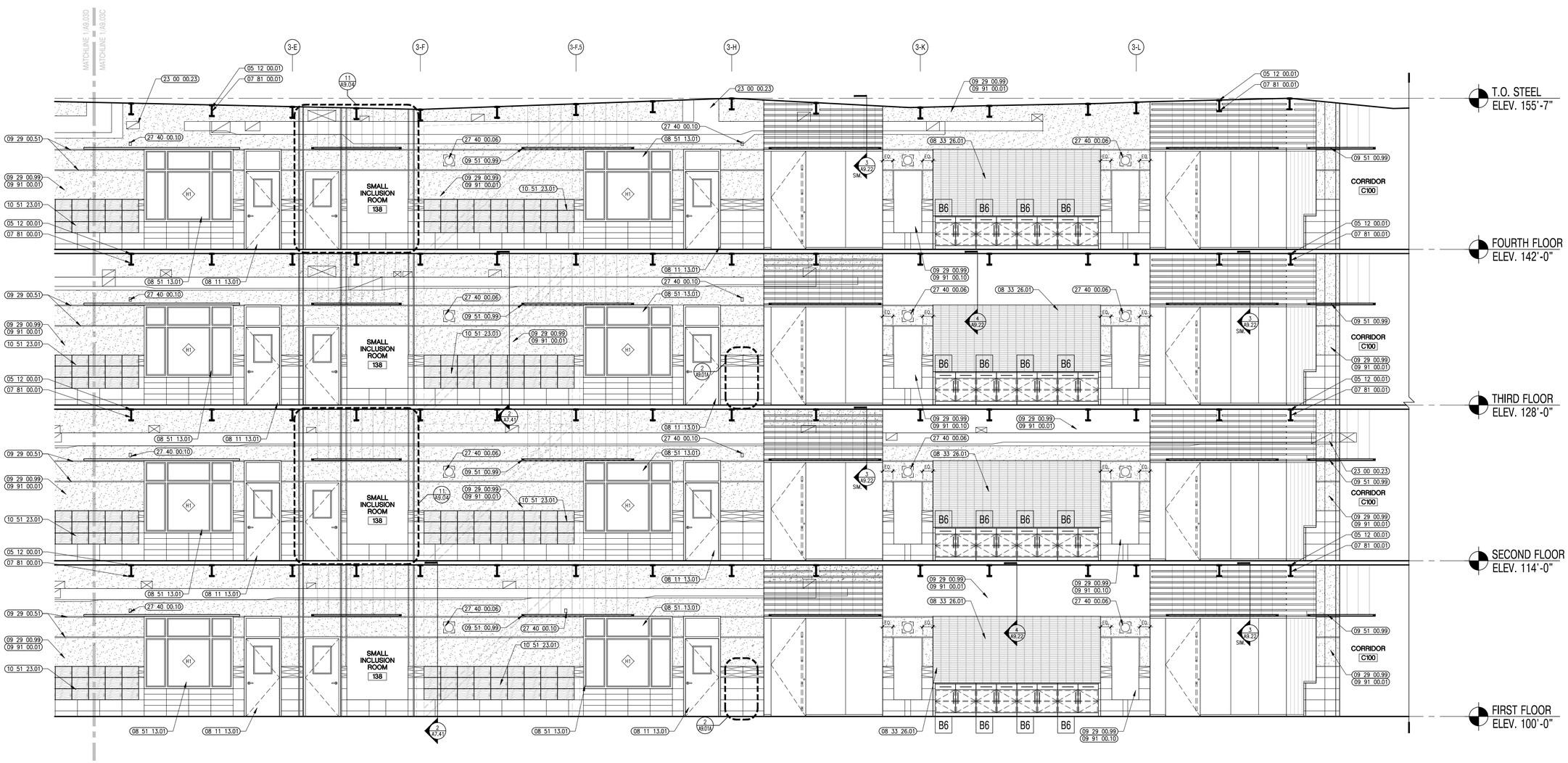

1 CORRIDOR C103, C203, C303, C403
1/4" = 1'-0"

526 Boston Post Rd Wayland, MA
508.358.0790 www.ai3architects.com

BEVERLY MIDDLE SCHOOL

CABOT STREET
BEVERLY, MA 01915

Copyright © 2016 Ai3 Architects, LLC

KEYNOTE LEGEND: (REFERENCE SHEETS A0.01 & A0.02 FOR MASTER KEYNOTE LIST AND KEYNOTES NOT LISTED)

05 12 00.01	STEEL BEAM – SEE STRUCTURAL
07 81 00.01	CEMENTITIOUS FIREPROOFING
08 11 13.01	DOOR AND FRAME– SEE DOOR SCHEDULE
08 33 26.01	OVERHEAD COILING GRILLE – TYPE 1 – 16'–0"W x 6'–6"H
08 51 13.01	ALUMINUM WINDOW – SEE SCHEDULE
09 29 00.51	ALUMINUM REVEAL TRIM – SATIN FINISH – 1 INCH
09 29 00.99	GYPSUM BOARD SYSTEM – LEVEL 4 FINISH – REFER TO FLOOR PLANS AND WALL TYPES FOR COMPONENTS
09 51 00.99	ACOUSTICAL CEILING – REFERENCE REFLECTED CEILING PLANS FOR TYPE AND HEIGHT
09 91 00.01	PAINT – SEE SCHEDULE
09 91 00.10	DRY ERASE PAINT
10 51 23.01	PHENOLIC LOCKER – RECESSED – TYPE 1
23 00 00.23	DUCT – SEE HVAC
27 40 00.06	SPEAKER – SEE TECHNOLOGY
27 40 00.10	FACE PLATE – SEE TECHNOLOGY

GENERAL NOTES:

1. NOT ALL POWER AND DATA OUTLET/SWITCHING LOCATIONS SHOWN. COORDINATE WITH ELECTRICAL AND TECHNOLOGY DRAWINGS FOR ALL LOCATIONS.
2. REFER TO DETAIL 2/A7.31 FOR FIRE EXTINGUISHER DETAILS AND MOUNTING HEIGHTS.

90% CONSTRUCTION DOCUMENTS

NOT FOR CONSTRUCTION

NORTH ARROW

KEYPLAN

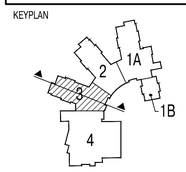

DRAWING NAME:

CLASSROOM CORRIDOR ELEVATIONS

DRAWN BY:	MJR
REVIEWED BY:	BPH
SCALE:	As Noted
JOB NO.:	1403.00
DATE:	July 25, 2016
DRAWING NUMBER:	A9.03C

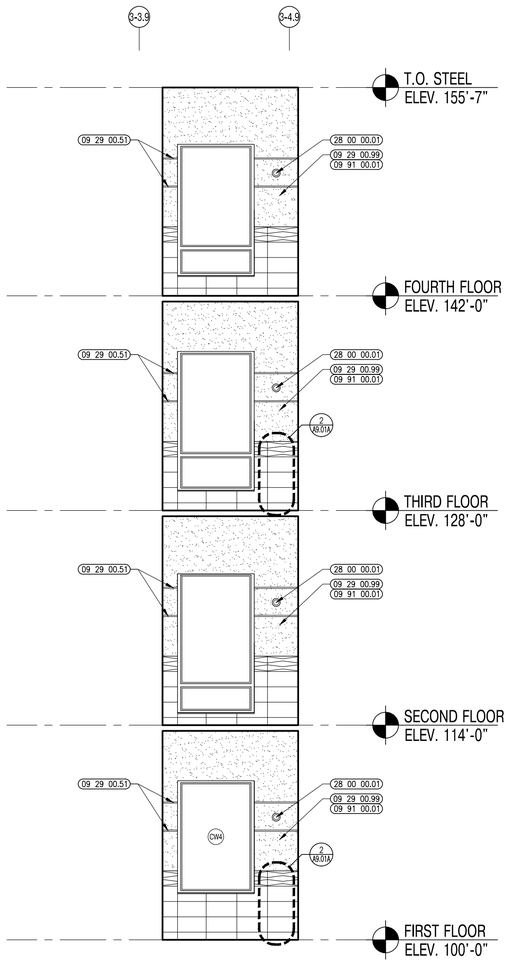

2 CORRIDOR C103, C203, C303, C403
1/4" = 1'-0"

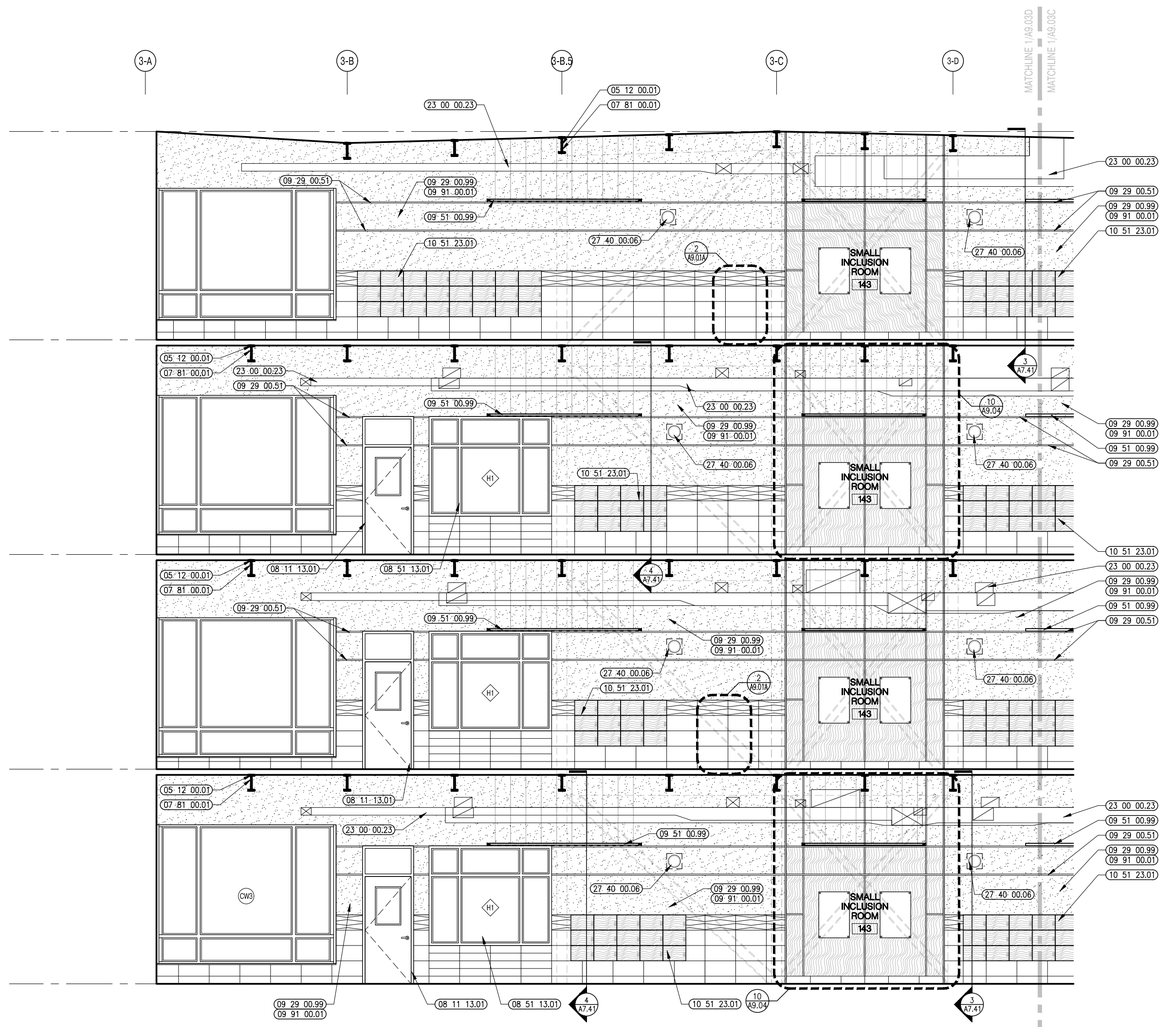

1 CORRIDOR C103, C203, C303, C403
1/4" = 1'-0"

526 Boston Post Rd Wayland, MA
508.358.0790 www.ai3architects.com

BEVERLY MIDDLE SCHOOL

CABOT STREET
BEVERLY, MA 01915

Copyright © 2016 Ai3 Architects, LLC

KEYNOTE LEGEND: (REFERENCE SHEETS A0.01 & A0.02 FOR MASTER KEYNOTE LIST AND KEYNOTES NOT LISTED)

05 12 00.01	STEEL BEAM – SEE STRUCTURAL
07 81 00.01	CEMENTITIOUS FIREPROOFING
08 11 13.01	DOOR AND FRAME– SEE DOOR SCHEDULE
08 51 13.01	ALUMINUM WINDOW – SEE SCHEDULE
09 29 00.51	ALUMINUM REVEAL TRIM – SATIN FINISH – 1 INCH
09 29 00.99	GYPSUM BOARD SYSTEM – LEVEL 4 FINISH – REFER TO FLOOR PLANS AND WALL TYPES FOR COMPONENTS
09 51 00.99	ACOUSTICAL CEILING – REFERENCE REFLECTED CEILING PLANS FOR TYPE AND HEIGHT
09 91 00.01	PAINT – SEE SCHEDULE
10 51 23.01	PHENOLIC LOCKER – RECESSED – TYPE 1
23 00 00.23	DUCT – SEE HVAC
27 40 00.06	SPEAKER – SEE TECHNOLOGY
28 00 00.01	CAMERA – SEE TECHNOLOGY

GENERAL NOTES:

1. NOT ALL POWER AND DATA OUTLET/SWITCHING LOCATIONS SHOWN. COORDINATE WITH ELECTRICAL AND TECHNOLOGY DRAWINGS FOR ALL LOCATIONS.
2. REFER TO DETAIL 2/A7.31 FOR FIRE EXTINGUISHER DETAILS AND MOUNTING HEIGHTS.

90% CONSTRUCTION DOCUMENTS

NOT FOR CONSTRUCTION

NORTH ARROW

KEYPLAN

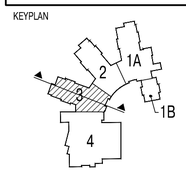

DRAWING NAME:

CLASSROOM CORRIDOR ELEVATIONS

DRAWN BY:	MJR
REVIEWED BY:	BPH
SCALE: As Noted	DRAWING NUMBER:
JOB NO.: 1403.00	A9.03D
DATE: July 25, 2016	

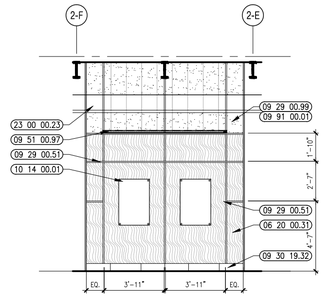

10 CORRIDOR INCLUSION ROOM
1/4" = 1'-0"

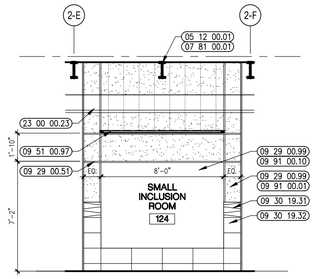

8 CORRIDOR INCLUSION ROOM
1/4" = 1'-0"

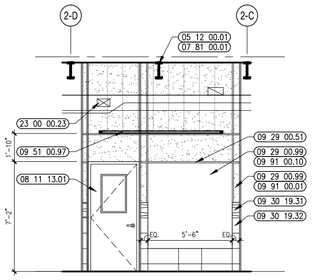

11 CORRIDOR INCLUSION ROOM
1/4" = 1'-0"

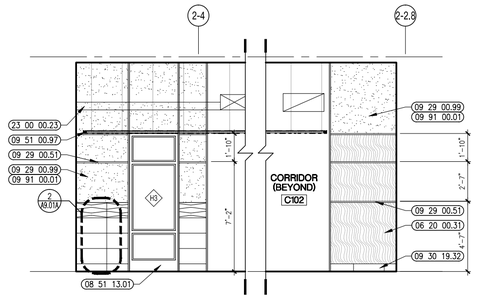

9 CORRIDOR INCLUSION ROOM
1/4" = 1'-0"

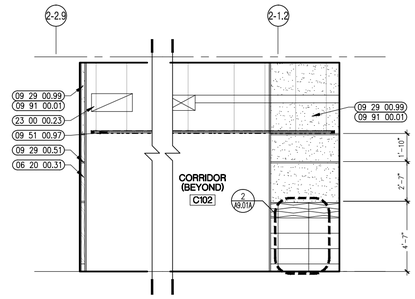

7 CORRIDOR INCLUSION ROOM
1/4" = 1'-0"

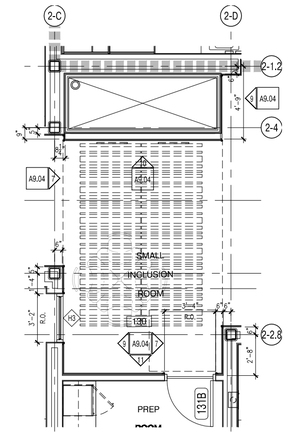

6 ENLARGED INCLUSION ROOM PLAN
1/4" = 1'-0"

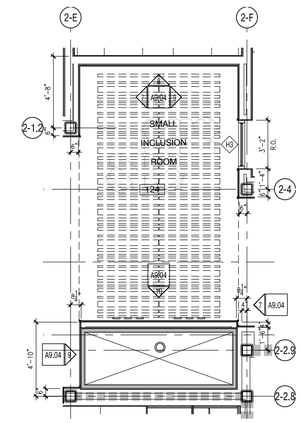

5 ENLARGED INCLUSION ROOM PLAN
1/4" = 1'-0"

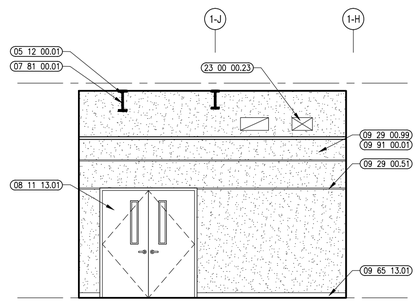

4 CORRIDOR C101A
1/4" = 1'-0"

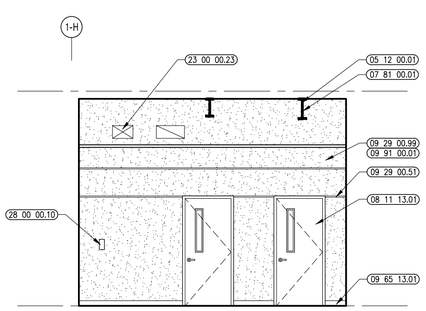

3 CORRIDOR C101A
1/4" = 1'-0"

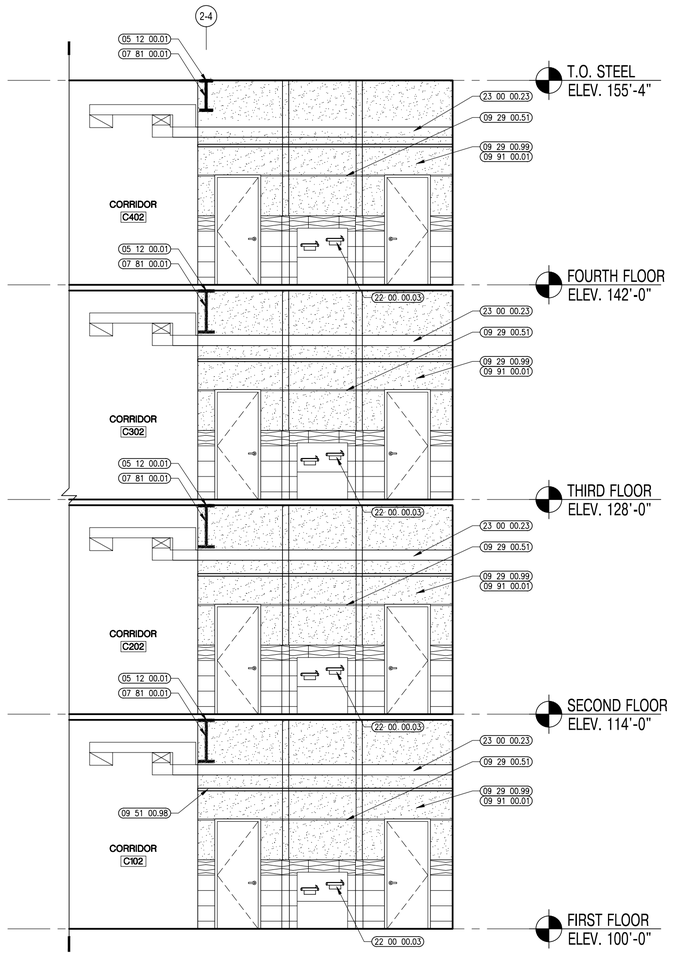

2 CORRIDOR C102A, C202A, C302A, C402A
1/4" = 1'-0"

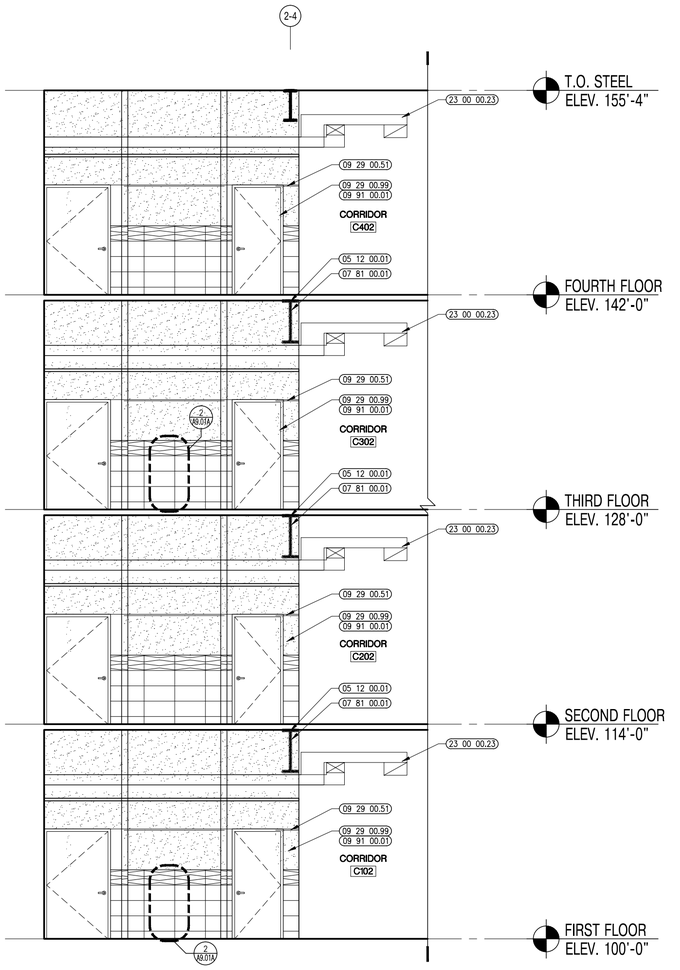

1 CORRIDOR C102A, C202A, C302A, C402A
1/4" = 1'-0"

A13 architects
526 Boston Post Rd Wayland, MA
508.358.0790 www.a13architects.com

BEVERLY MIDDLE SCHOOL

CABOT STREET
BEVERLY, MA 01915

Copyright © 2016 A13 Architects, LLC

KEYNOTE LEGEND: (REFERENCE SHEETS A0.01 & A0.02 FOR MASTER KEYNOTE LIST AND KEYNOTES NOT LISTED)

05 12 00.01	STEEL BEAM – SEE STRUCTURAL
06 20 00.31	HARDWOOD VENEER PLYWOOD – 1/2 INCH – TRANSPARENT FINISH
07 81 00.01	CEMENTITIOUS FIREPROOFING
08 11 13.01	DOOR AND FRAME– SEE DOOR SCHEDULE
08 51 13.01	ALUMINUM WINDOW – SEE SCHEDULE
09 29 00.51	ALUMINUM REVEAL TRIM – SATIN FINISH – 1 INCH
09 29 00.99	GYPSUM BOARD SYSTEM – LEVEL 4 FINISH – REFER TO FLOOR PLANS AND WALL TYPES FOR COMPONENTS
09 30 19.31	PORCELAIN WALL TILE – 12 x 24 – TYPE 1
09 30 19.32	PORCELAIN WALL TILE – 12 x 24 – TYPE 2
09 51 00.97	ACOUSTICAL CLOUD – REFERENCE REFLECTED CEILING PLANS FOR TYPE AND HEIGHT
09 51 00.98	WOOD VENEER CEILING SYSTEM – REFERENCE REFLECTED CEILING PLANS FOR TYPE AND HEIGHT
09 65 13.01	RUBBER BASE – 4"
09 91 00.01	PAINT – SEE SCHEDULE
09 91 00.10	DRY ERASE PAINT
10 14 00.01	INTERIOR SIGNAGE – TYPE AS SCHEDULED
22 00 00.03	WATER FOUNTAIN – SEE PLUMBING
23 00 00.23	DUCT – SEE HVAC
28 00 00.10	SECURITY KEYPAD – SEE TECHNOLOGY

GENERAL NOTES:

1. NOT ALL POWER AND DATA OUTLET/SWITCHING LOCATIONS SHOWN. COORDINATE WITH ELECTRICAL AND TECHNOLOGY DRAWINGS FOR ALL LOCATIONS.
2. REFER TO DETAIL 2/A7.31 FOR FIRE EXTINGUISHER DETAILS AND MOUNTING HEIGHTS.

90% CONSTRUCTION DOCUMENTS

NOT FOR CONSTRUCTION

NORTH ARROW

KEYPLAN

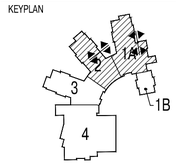

DRAWING NAME:

CLASSROOM CORRIDOR ELEVATIONS

DRAWN BY:	MJR
REVIEWED BY:	BPH
SCALE: As Noted	DRAWING NUMBER:
JOB NO.: 1403.00	A9.04
DATE: July 25, 2016	

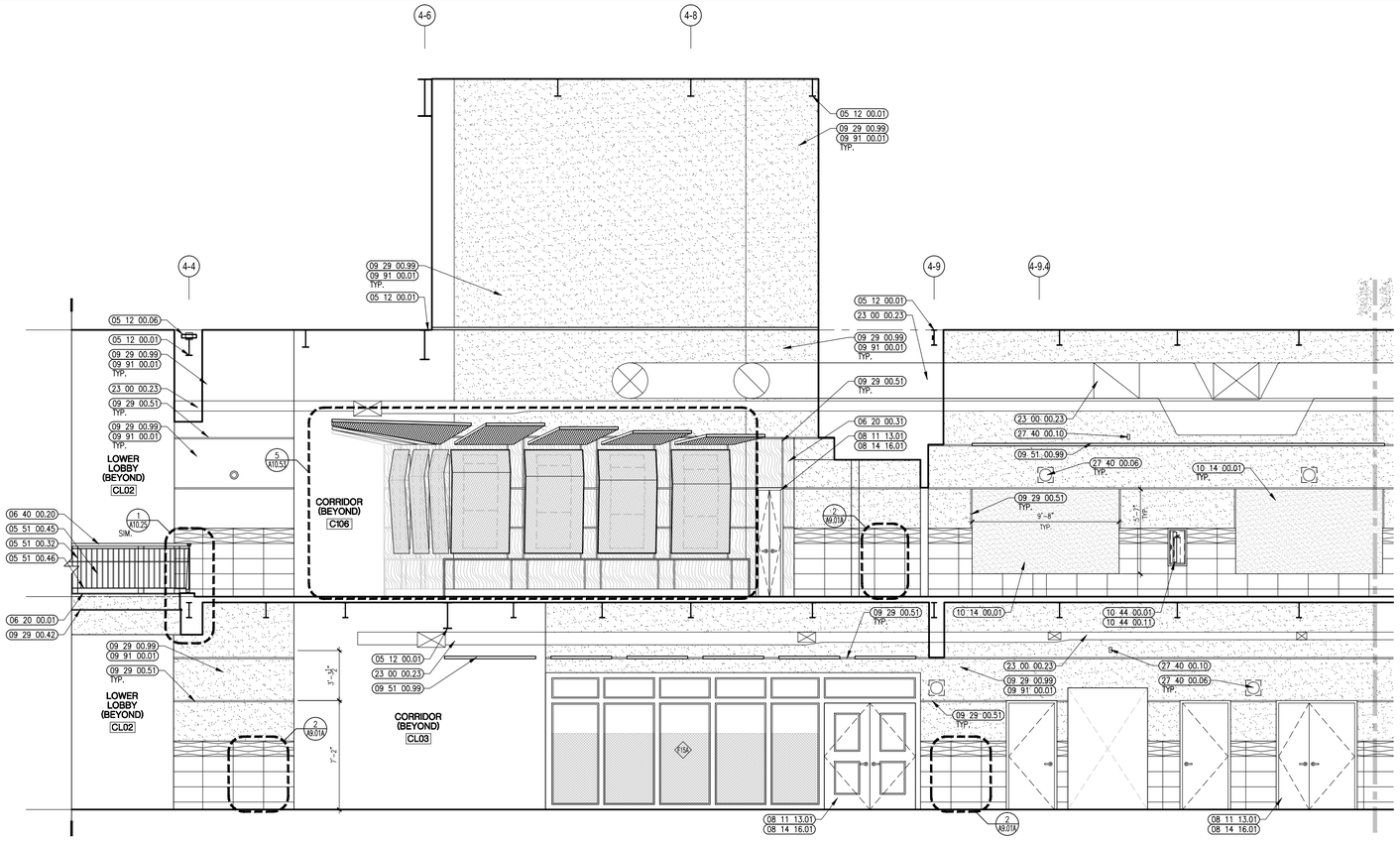

2 CORRIDOR CL04, C106
1/4" = 1'-0"

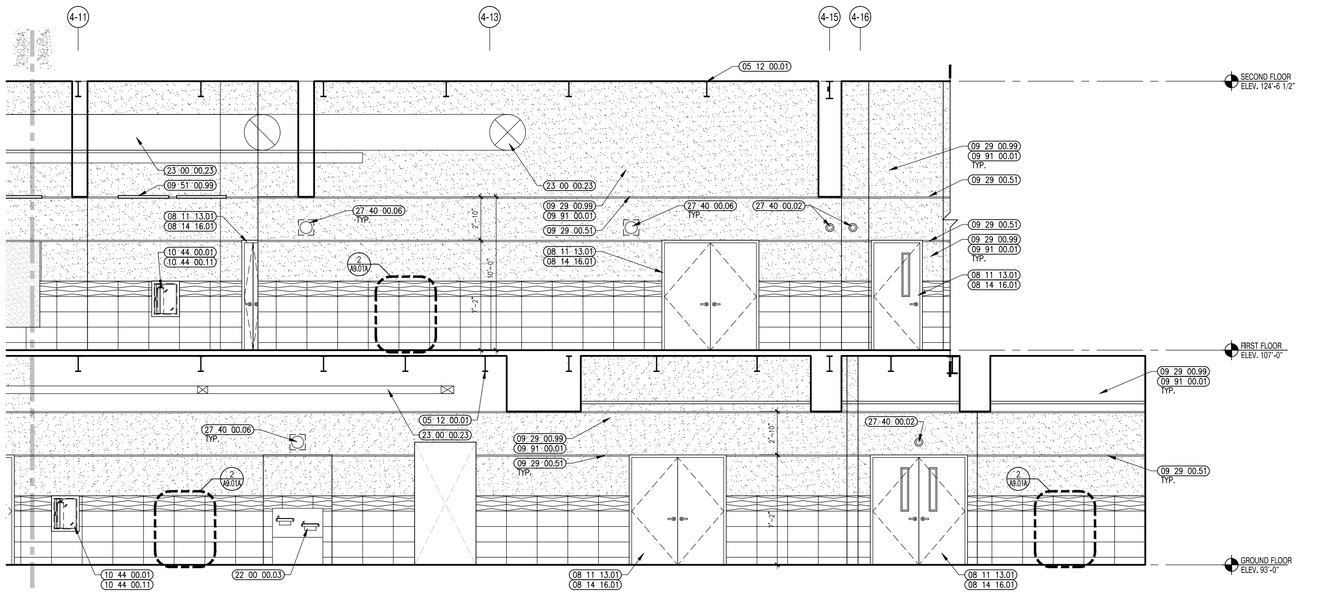

1 CORRIDOR CL04, C106
1/4" = 1'-0"

526 Boston Post Rd Wayland, MA
508.358.0790 www.ai3architects.com

BEVERLY MIDDLE SCHOOL

CABOT STREET
BEVERLY, MA 01915

Copyright © 2016 Ai3 Architects, LLC

KEYNOTE LEGEND: (REFERENCE SHEETS A0.01 & A0.02 FOR MASTER KEYNOTE LIST AND KEYNOTES NOT LISTED)

05 12 00.01	STEEL BEAM – SEE STRUCTURAL
05 12 00.06	STEEL TUBE – SEE STRUCTURAL
05 51 00.32	STAINLESS STEEL INTERMEDIATE HANDRAIL WITH POSTS ANCHORED TO FLOOR
05 51 00.45	STEEL BAR – 5/8 INCH x 5/8 INCH
05 51 00.46	STEEL BAR – 5/8 INCH DIA.
06 20 00.01	HARDWOOD MILLWORK – TRANSPARENT FINISH
06 20 00.31	HARDWOOD VENEER PLYWOOD – 1/2 INCH – TRANSPARENT FINISH
06 40 00.20	HARDWOOD TRIM – TRANSPARENT FINISH – SIZE AS DRAWN
08 11 13.01	DOOR AND FRAME– SEE DOOR SCHEDULE
08 14 16.01	SOLID CORE FLUSH WOOD DOOR– SEE DOOR SCHEDULE
09 29 00.42	REVEAL – PAINTABLE 3/4 INCH
09 29 00.51	ALUMINUM REVEAL TRIM – SATIN FINISH – 1 INCH
09 29 00.99	GYPSUM BOARD SYSTEM – LEVEL 4 FINISH – REFER TO FLOOR PLANS AND WALL TYPES FOR COMPONENTS
09 51 00.99	ACOUSTICAL CEILING – REFERENCE REFLECTED CEILING PLANS FOR TYPE AND HEIGHT
09 91 00.01	PAINT – SEE SCHEDULE
10 14 00.01	INTERIOR SIGNAGE – TYPE AS SCHEDULED
10 44 00.01	FIRE EXTINGUISHER CABINET – FULLY RECESSED
10 44 00.11	FIRE EXTINGUISHER
22 00 00.03	WATER FOUNTAIN – SEE PLUMBING
23 00 00.23	DUCT – SEE HVAC
27 40 00.02	CAMERA – SEE TECHNOLOGY
27 40 00.06	SPEAKER – SEE TECHNOLOGY
27 40 00.10	FACE PLATE – SEE TECHNOLOGY

GENERAL NOTES:

1. NOT ALL POWER AND DATA OUTLET/SWITCHING LOCATIONS SHOWN. COORDINATE WITH ELECTRICAL AND TECHNOLOGY DRAWINGS FOR ALL LOCATIONS.
2. REFER TO DETAIL 2/A7.31 FOR FIRE EXTINGUISHER DETAILS AND MOUNTING HEIGHTS.

90% CONSTRUCTION DOCUMENTS

NOT FOR CONSTRUCTION

NORTH ARROW

KEYPLAN

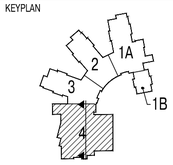

DRAWING NAME:

CLASSROOM CORRIDOR ELEVATIONS

DRAWN BY:	MJR
REVIEWED BY:	BPH
SCALE:	As Noted
JOB NO.:	1403.00
DATE:	July 25, 2016
DRAWING NUMBER:	A9.05A

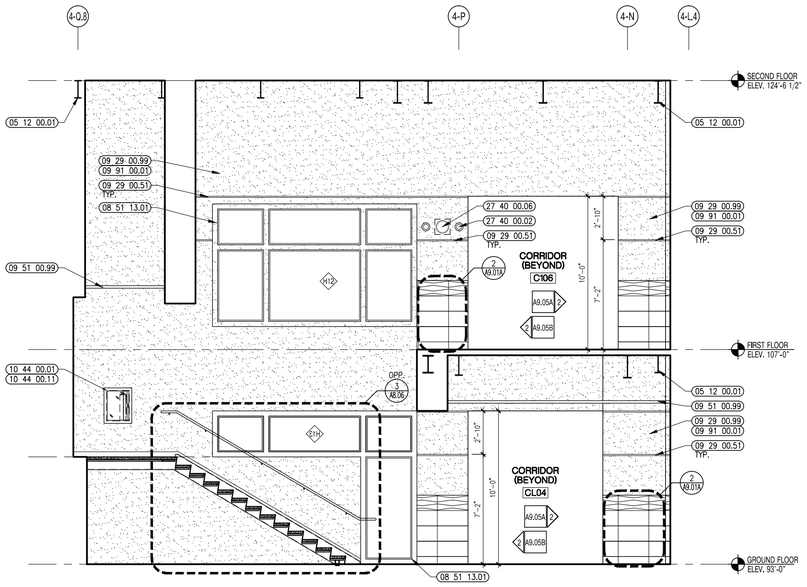

3 CORRIDOR CL04, C106
1/4" = 1'-0"

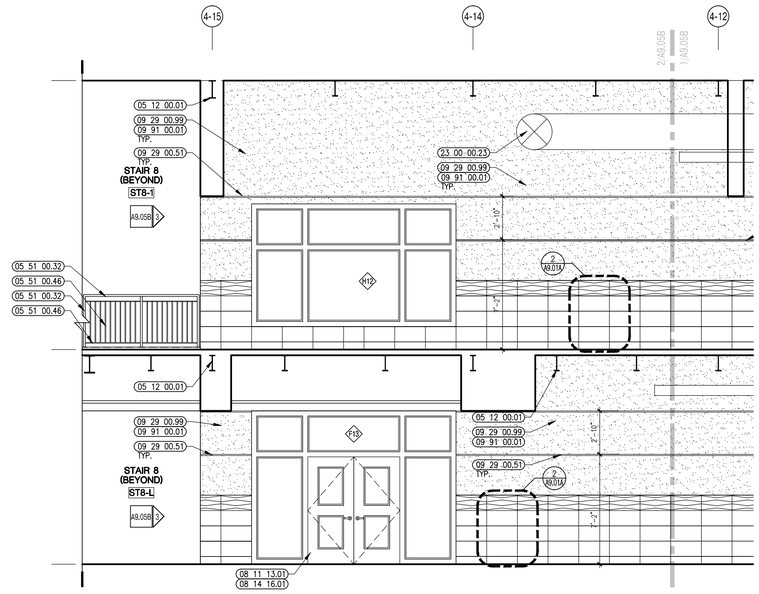

2 CORRIDOR CL04, C106
1/4" = 1'-0"

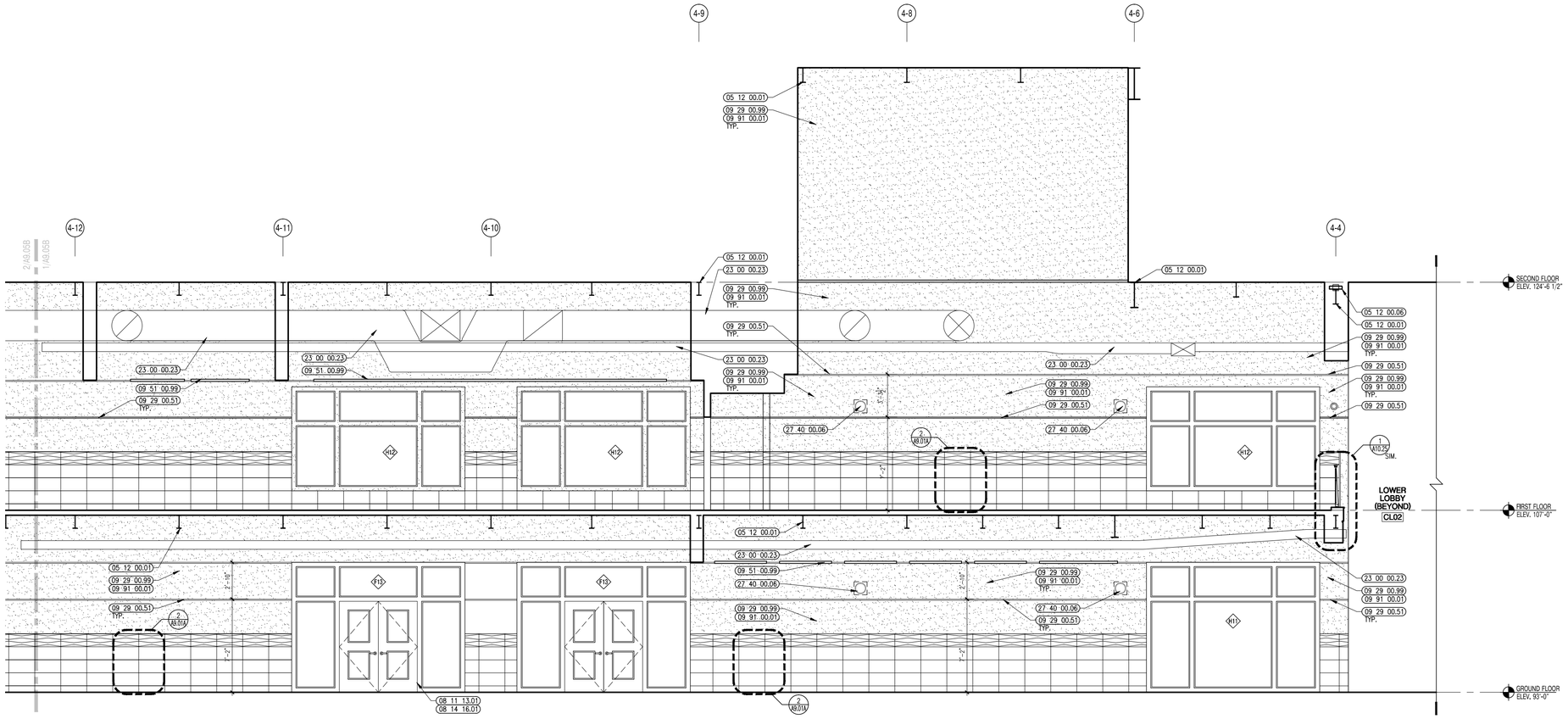

1 CORRIDOR CL04, C106
1/4" = 1'-0"

526 Boston Post Rd Wayland, MA
508.358.0790 www.ai3architects.com

BEVERLY MIDDLE SCHOOL

CABOT STREET
BEVERLY, MA 01915

Copyright © 2016 A13 Architects, LLC

KEYNOTE LEGEND: (REFERENCE SHEETS A0.01 & A0.02 FOR MASTER KEYNOTE LIST AND KEYNOTES NOT LISTED)

05 12 00.01	STEEL BEAM – SEE STRUCTURAL
05 12 00.06	STEEL TUBE – SEE STRUCTURAL
05 51 00.32	STAINLESS STEEL INTERMEDIATE HANDRAIL WITH POSTS ANCHORED TO FLOOR
05 51 00.46	STEEL BAR – 5/8 INCH DIA.
08 11 13.01	DOOR AND FRAME– SEE DOOR SCHEDULE
08 14 16.01	SOLID CORE FLUSH WOOD DOOR– SEE DOOR SCHEDULE
08 51 13.01	ALUMINUM WINDOW – SEE SCHEDULE
09 29 00.51	ALUMINUM REVEAL TRIM – SATIN FINISH – 1 INCH
09 29 00.99	GYPSUM BOARD SYSTEM – LEVEL 4 FINISH – REFER TO FLOOR PLANS AND WALL TYPES FOR COMPONENTS
09 51 00.99	ACOUSTICAL CEILING – REFERENCE REFLECTED CEILING PLANS FOR TYPE AND HEIGHT
09 91 00.01	PAINT – SEE SCHEDULE
10 44 00.01	FIRE EXTINGUISHER CABINET – FULLY RECESSED
10 44 00.11	FIRE EXTINGUISHER
23 00 00.23	DUCT – SEE HVAC
27 40 00.02	CAMERA – SEE TECHNOLOGY
27 40 00.06	SPEAKER – SEE TECHNOLOGY

GENERAL NOTES:

1. NOT ALL POWER AND DATA OUTLET/SWITCHING LOCATIONS SHOWN. COORDINATE WITH ELECTRICAL AND TECHNOLOGY DRAWINGS FOR ALL LOCATIONS.
2. REFER TO DETAIL 2/A7.31 FOR FIRE EXTINGUISHER DETAILS AND MOUNTING HEIGHTS.

90% CONSTRUCTION DOCUMENTS

NOT FOR CONSTRUCTION

NORTH ARROW

KEYPLAN

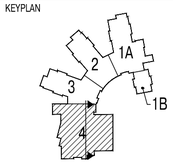

DRAWING NAME:

CLASSROOM CORRIDOR ELEVATIONS

DRAWN BY:	MJR
REVIEWED BY:	BPH
SCALE:	As Noted
JOB NO.:	1403.00
DATE:	July 25, 2016
DRAWING NUMBER:	A9.05B

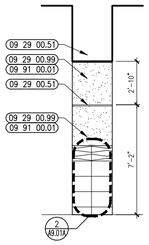

5 CORRIDOR CL03 WALL
1/4" = 1'-0"

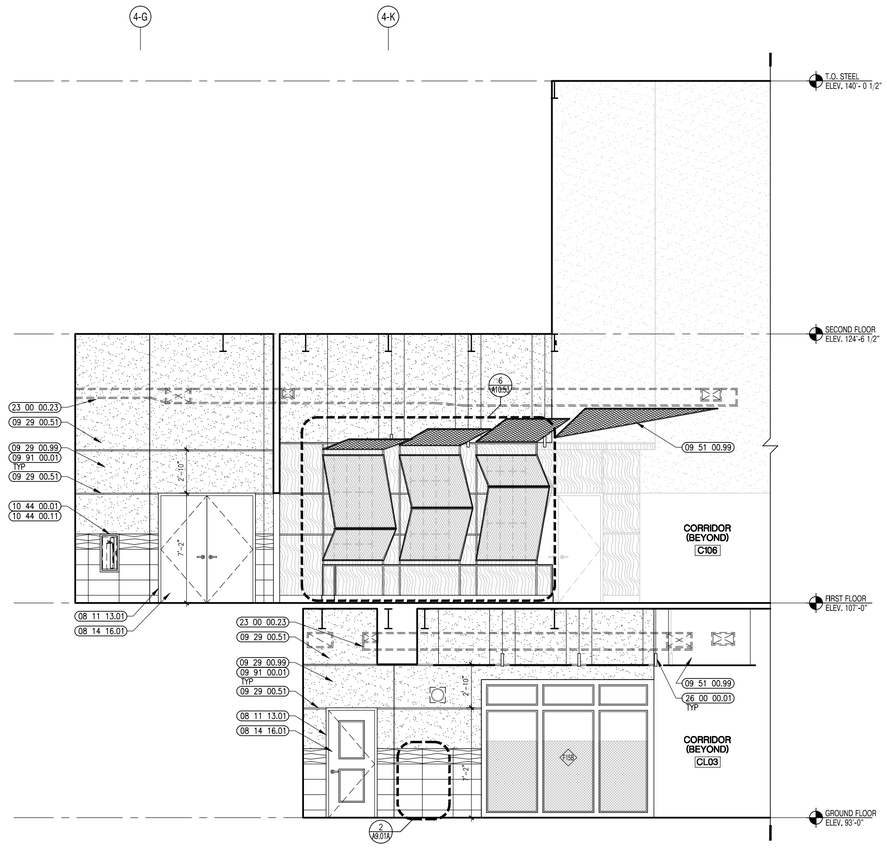

4 CORRIDOR CL03, C105
1/4" = 1'-0"

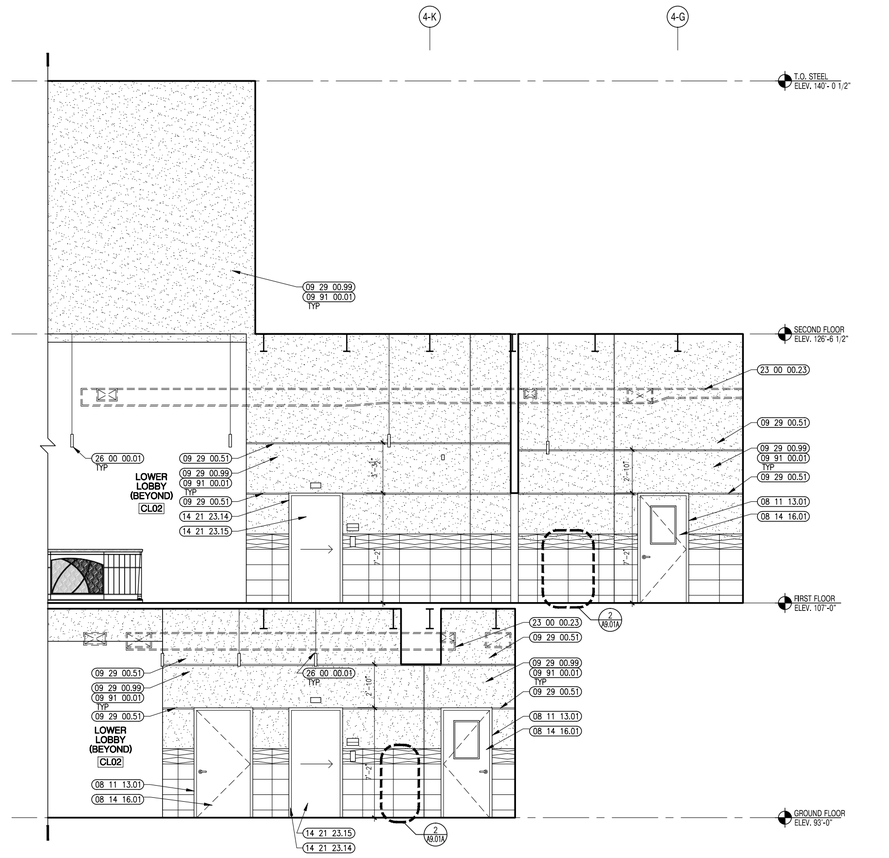

2 CORRIDOR CL03, C105
1/4" = 1'-0"

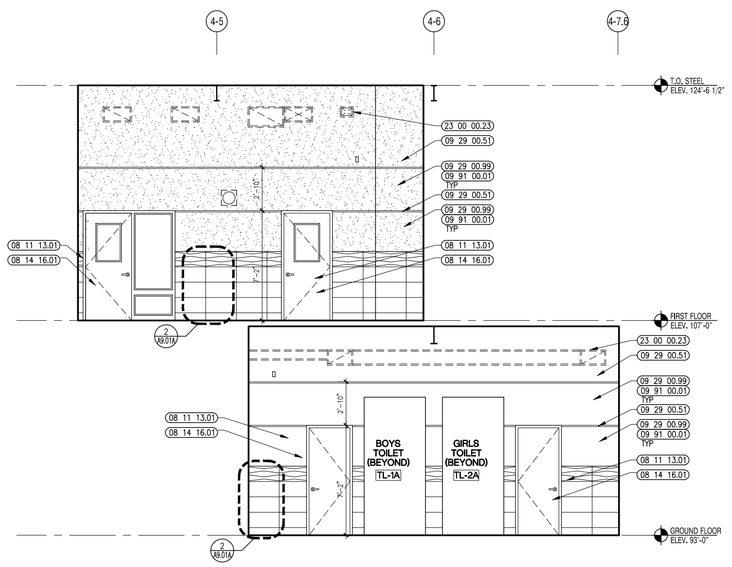

3 CORRIDOR CL03, C105
1/4" = 1'-0"

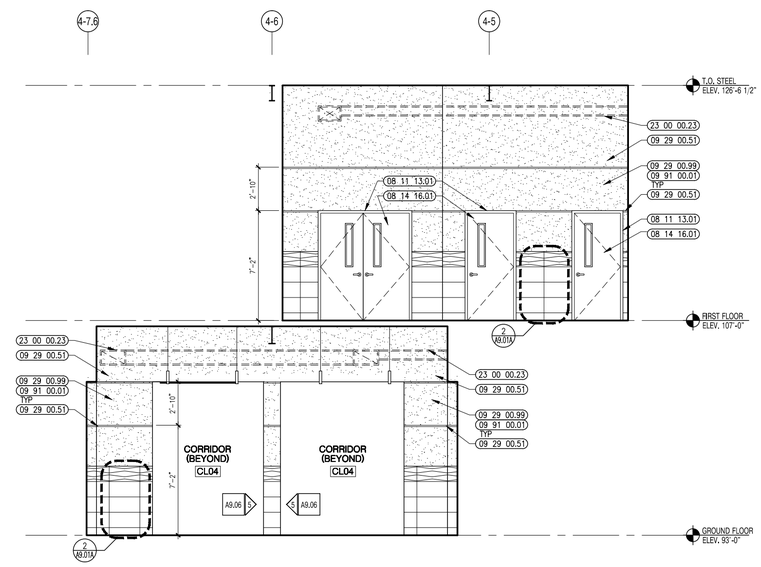

1 CORRIDOR CL03, C105
1/4" = 1'-0"

A13 architects
526 Boston Post Rd Wayland, MA
508.358.0790 www.a13architects.com

BEVERLY MIDDLE SCHOOL

CABOT STREET
BEVERLY, MA 01915

Copyright © 2016 A13 Architects, LLC

KEYNOTE LEGEND: (REFERENCE SHEETS A0.01 & A0.02 FOR MASTER KEYNOTE LIST AND KEYNOTES NOT LISTED)

08 11 13.01	DOOR AND FRAME– SEE DOOR SCHEDULE
08 14 16.01	SOLID CORE FLUSH WOOD DOOR– SEE DOOR SCHEDULE
09 29 00.51	ALUMINUM REVEAL TRIM – SATIN FINISH – 1 INCH
09 29 00.99	GYPSUM BOARD SYSTEM – LEVEL 4 FINISH – REFER TO FLOOR PLANS AND WALL TYPES FOR COMPONENTS
09 51 00.99	ACOUSTICAL CEILING – REFERENCE REFLECTED CEILING PLANS FOR TYPE AND HEIGHT
09 91 00.01	PAINT – SEE SCHEDULE
10 44 00.01	FIRE EXTINGUISHER CABINET – FULLY RECESSED
10 44 00.11	FIRE EXTINGUISHER
14 21 23.14	ELEVATOR DOOR FRAME
14 21 23.15	ELEVATOR DOORS
23 00 00.23	DUCT – SEE HVAC
26 00 00.01	LIGHT FIXTURE – SEE ELECTRICAL

GENERAL NOTES:

1. NOT ALL POWER AND DATA OUTLET/SWITCHING LOCATIONS SHOWN. COORDINATE WITH ELECTRICAL AND TECHNOLOGY DRAWINGS FOR ALL LOCATIONS.
2. REFER TO DETAIL 2/A7.31 FOR FIRE EXTINGUISHER DETAILS AND MOUNTING HEIGHTS.

90% CONSTRUCTION DOCUMENTS

NOT FOR CONSTRUCTION

NORTH ARROW

KEYPLAN

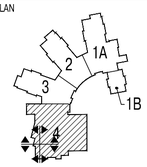

DRAWING NAME:

CLASSROOM CORRIDOR ELEVATIONS

DRAWN BY:	MJR / JMR
REVIEWED BY:	BPH
SCALE:	As Noted
JOB NO.:	1403.00
DATE:	July 25, 2016
DRAWING NUMBER:	A9.06

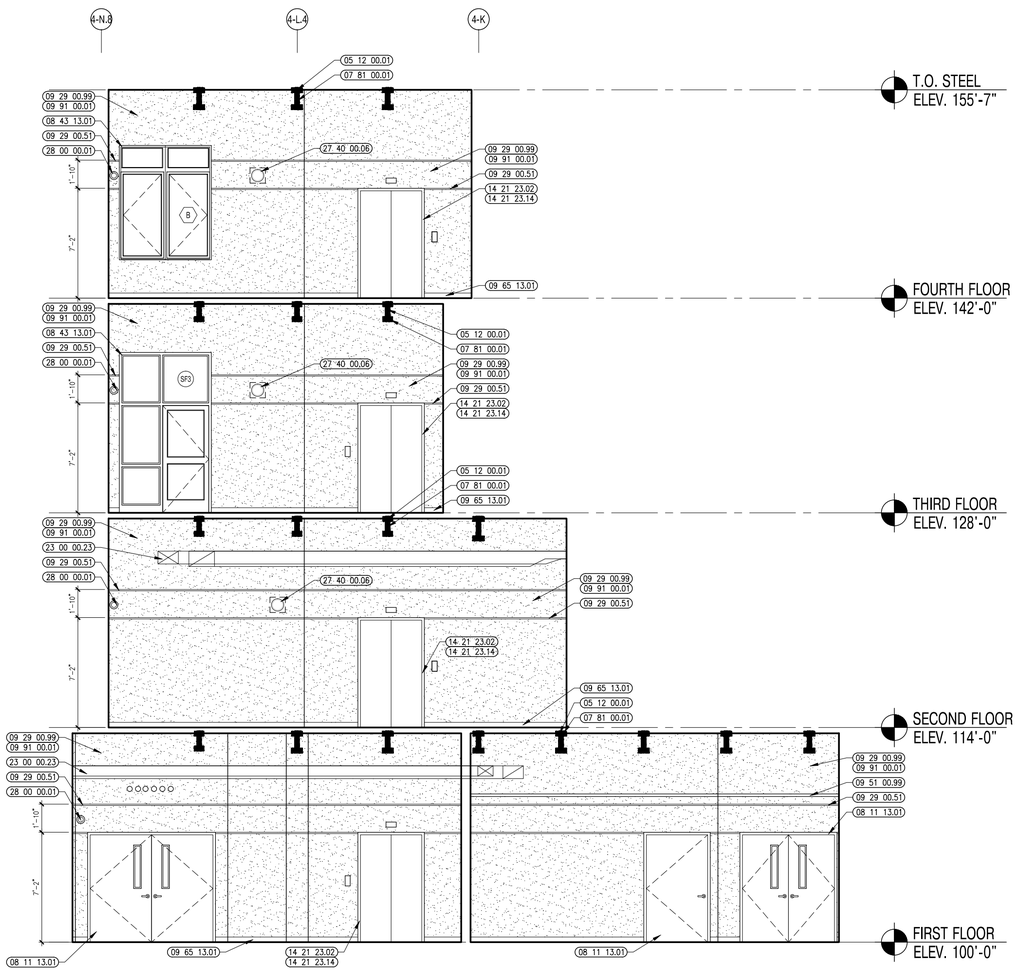

2 CORRIDOR C104, C204, C304, C404
1/4" = 1'-0"

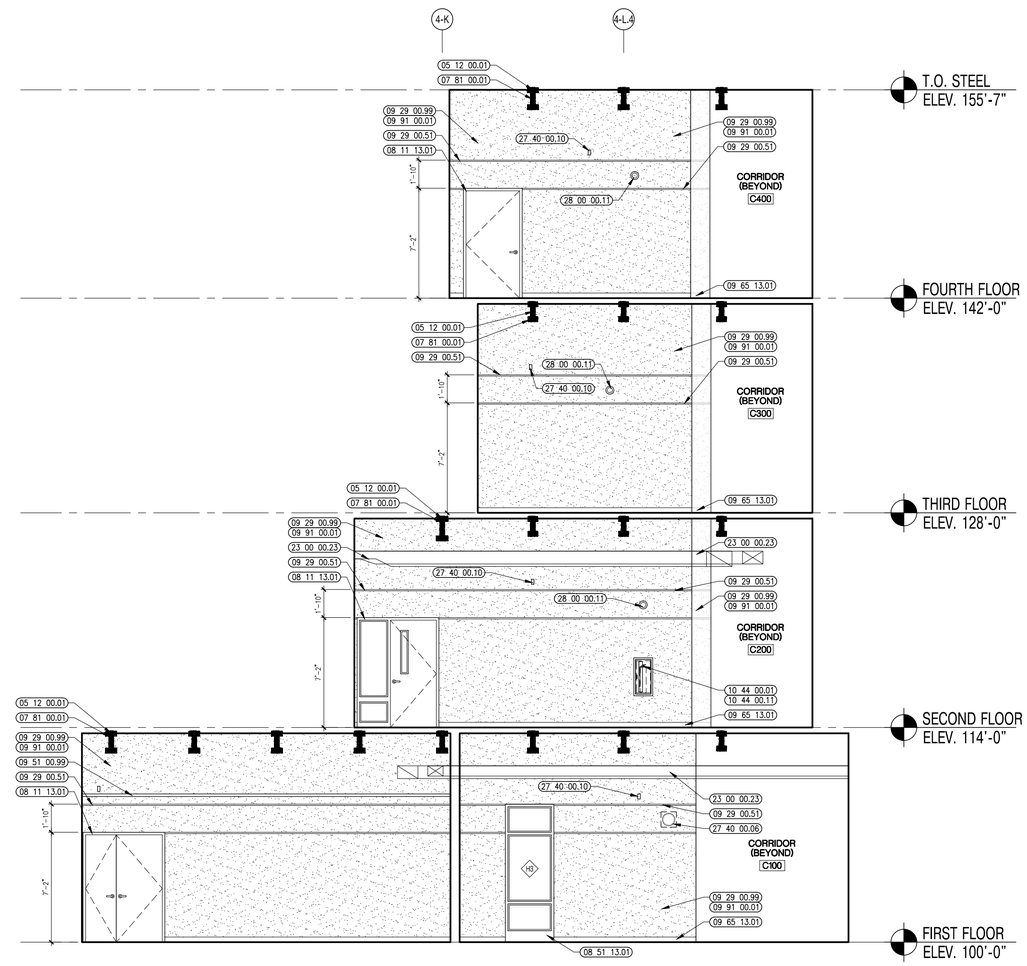

1 CORRIDOR C104, C204, C304, C404
1/4" = 1'-0"

526 Boston Post Rd Wayland, MA
508.358.0790 www.ai3architects.com

Copyright © 2016 Ai3 Architects, LLC

BEVERLY MIDDLE SCHOOL

CABOT STREET
BEVERLY, MA 01915

KEYNOTE LEGEND: (REFERENCE SHEETS A0.01 & A0.02 FOR MASTER KEYNOTE LIST AND KEYNOTES NOT LISTED)

05 12 00.01	STEEL BEAM – SEE STRUCTURAL
07 81 00.01	CEMENTITIOUS FIREPROOFING
08 11 13.01	DOOR AND FRAME– SEE DOOR SCHEDULE
08 43 13.01	ALUMINUM STOREFRONT FRAME
08 51 13.01	ALUMINUM WINDOW – SEE SCHEDULE
09 29 00.51	ALUMINUM REVEAL TRIM – SATIN FINISH – 1 INCH
09 29 00.99	GYPSUM BOARD SYSTEM – LEVEL 4 FINISH – REFER TO FLOOR PLANS AND WALL TYPES FOR COMPONENTS
09 51 00.99	ACOUSTICAL CEILING – REFERENCE REFLECTED CEILING PLANS FOR TYPE AND HEIGHT
09 65 13.01	RUBBER BASE – 4"
09 91 00.01	PAINT – SEE SCHEDULE
10 44 00.01	FIRE EXTINGUISHER CABINET – FULLY RECESSED
10 44 00.11	FIRE EXTINGUISHER
14 21 23.02	ELEVATOR – TYPE 2 – SEE SPECIFICATION
14 21 23.14	ELEVATOR DOOR FRAME
23 00 00.23	DUCT – SEE HVAC
27 40 00.06	SPEAKER – SEE TECHNOLOGY
27 40 00.10	FACE PLATE – SEE TECHNOLOGY
28 00 00.01	CAMERA – SEE TECHNOLOGY
28 00 00.11	MOTION SENSOR – SEE TECHNOLOGY

GENERAL NOTES:

1. NOT ALL POWER AND DATA OUTLET/SWITCHING LOCATIONS SHOWN. COORDINATE WITH ELECTRICAL AND TECHNOLOGY DRAWINGS FOR ALL LOCATIONS.
2. REFER TO DETAIL 2/A7.31 FOR FIRE EXTINGUISHER DETAILS AND MOUNTING HEIGHTS.

90% CONSTRUCTION DOCUMENTS

NOT FOR CONSTRUCTION

NORTH ARROW

KEYPLAN

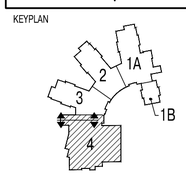

DRAWING NAME:

CLASSROOM CORRIDOR ELEVATIONS

DRAWN BY:	MJR
REVIEWED BY:	BPH
SCALE: As Noted	DRAWING NUMBER:
JOB NO.: 1403.00	A9.07
DATE: July 25, 2016	

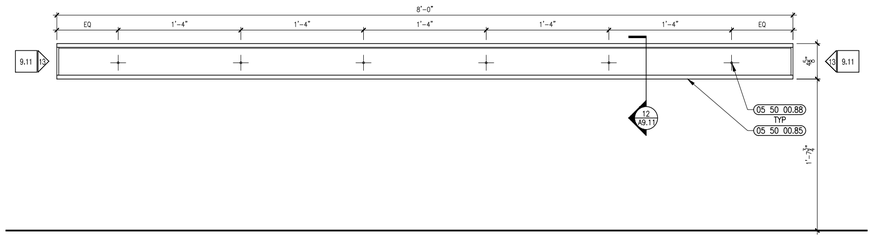

14 ALUMINUM MARKER TROUGH ELEVATION
1 1/2" = 1'-0"
TYP

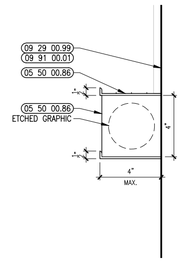

13 MARKER TROUGH CAP DETAIL
3" = 1'-0"
TYP

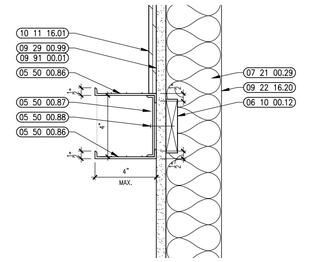

12 MARKER TROUGH SECTION DETAIL
3" = 1'-0"
TYP

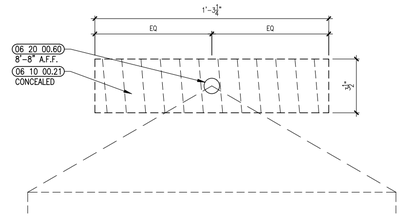

11 FLAG HOOK DETAIL
3" = 1'-0"

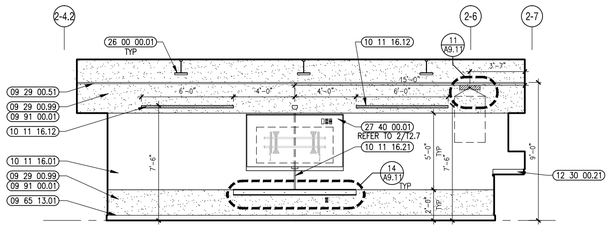

10 TYPICAL CLASSROOM INTERIOR ELEVATION
1/4" = 1'-0"

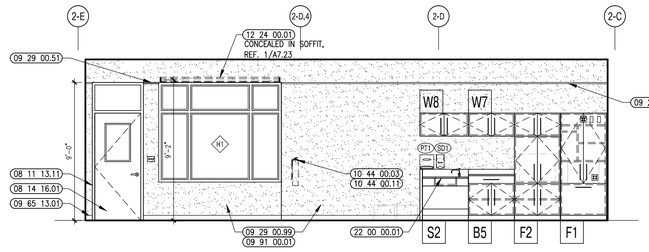

9 TYPICAL CLASSROOM INTERIOR ELEVATION
1/4" = 1'-0"

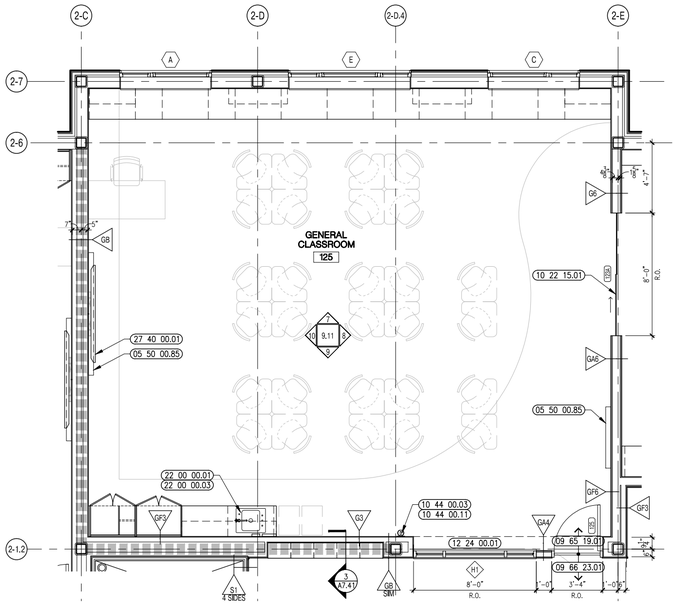

6 TYPICAL CLASSROOM ENLARGED PLAN
1/4" = 1'-0"

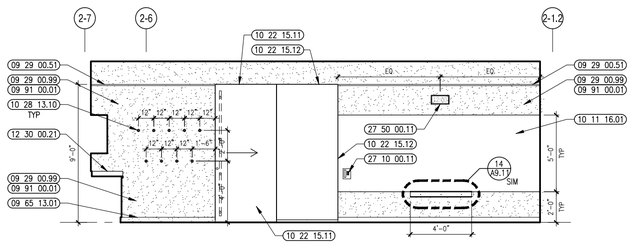

8 TYPICAL CLASSROOM INTERIOR ELEVATION
1/4" = 1'-0"

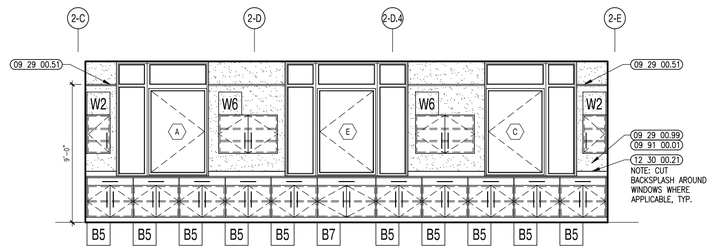

7 TYPICAL CLASSROOM INTERIOR ELEVATION
1/4" = 1'-0"

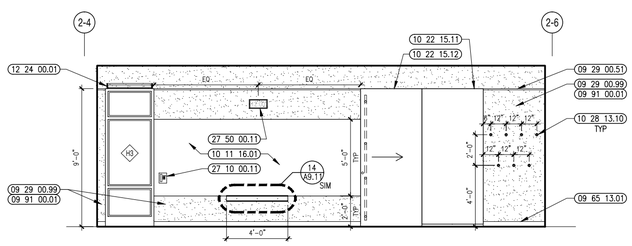

5 TYPICAL CLASSROOM INTERIOR ELEVATION
1/4" = 1'-0"

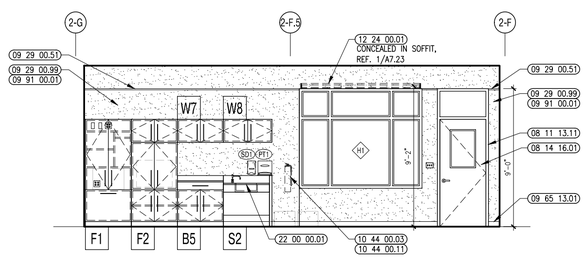

4 TYPICAL CLASSROOM INTERIOR ELEVATION
1/4" = 1'-0"

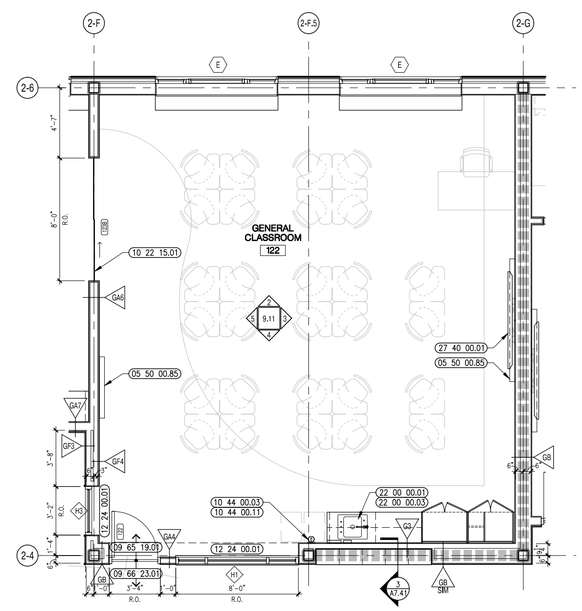

1 TYPICAL CLASSROOM ENLARGED PLAN
1/4" = 1'-0"

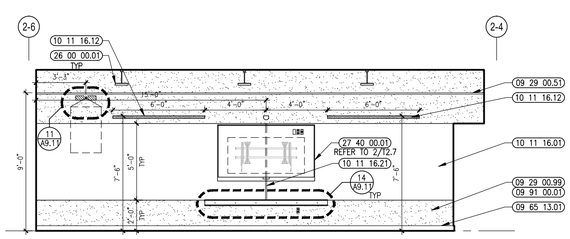

3 TYPICAL CLASSROOM INTERIOR ELEVATION
1/4" = 1'-0"

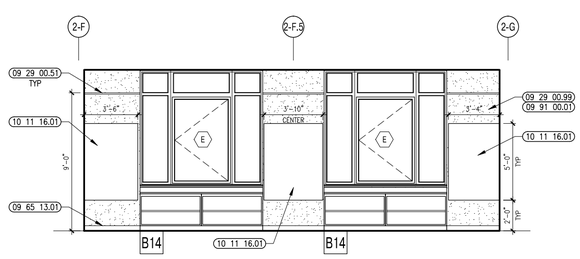

2 TYPICAL CLASSROOM INTERIOR ELEVATION
1/4" = 1'-0"

526 Boston Post Rd Wayland, MA
508.358.0790 www.ai3architects.com

BEVERLY MIDDLE SCHOOL

CABOT STREET
BEVERLY, MA 01915

Copyright © 2016 A13 Architects, LLC

KEYNOTE LEGEND: (REFERENCE SHEETS A0.01 & A0.02 FOR MASTER KEYNOTE LIST AND KEYNOTES NOT LISTED)

05 50 00.85	ALUMINUM MARKER TROUGH
05 50 00.86	ALUMINUM SHEET
05 50 00.87	ALUMINUM CHANNEL
05 50 00.88	STAINLESS STEEL MECHANICAL FASTENER & WASHER
06 10 00.12	WOOD BLOCKING – 1X PRESSURE TREATED – SIZE AS NOTED OR DRAWN
06 10 00.21	WOOD BLOCKING – 2X FIRE RETARDANT TREATED – SIZE AS NOTED OR DRAWN
06 20 00.60	FLAG HOOK STANDOFF WITH CAP
07 21 00.29	GLASS FIBER ACOUSTICAL BLANKET INSULATION – MATCH DEPTH OF STUD – UNFACED
08 11 13.11	CLIP ANGLE
08 14 16.01	CLIP ANGLE
09 22 16.20	METAL STUD – REFER TO FLOOR PLANS FOR DEPTH
09 29 00.51	HIGH PERFORMANCE COATING
09 29 00.99	GYPSUM BOARD SYSTEM – LEVEL 4 FINISH – REFER TO FLOOR PLANS AND WALL TYPES FOR COMPONENTS
09 65 13.01	HIGH PERFORMANCE COATING
09 65 19.01	HIGH PERFORMANCE COATING
09 66 23.01	RESINOUS MATRIX TERRAZZO FLOORING
09 91 00.01	HIGH PERFORMANCE COATING
10 11 16.01	DRY MARKER BOARD
10 11 16.12	2 INCH TACK BOARD STRIP
10 11 16.21	DRY ERASE H-BAR SPLICE
10 22 15.01	INTERIOR GLASS WALL SYSTEM
10 22 15.11	FIXED GLASS PANEL
10 22 15.12	SLIDING GLASS DOOR
10 28 13.10	COAT HOOK
10 44 00.03	SEALANT – TYPE AS REQUIRED
10 44 00.11	SEALANT – TYPE AS REQUIRED
12 24 00.01	ROLLER SHADE
12 30 00.21	PLASTIC LAMINATE BACKSPLASH – 4 INCH
22 00 00.01	SINK – SEE PLUMBING
22 00 00.03	WATER FOUNTAIN – SEE PLUMBING
26 00 00.01	ELECTRICAL PANEL – SEE ELECTRICAL
27 10 00.11	TELEPHONE JACK – SEE TECHNOLOGY – TELEPHONE DEVICE TO BE OWNER FURNISHED AND INSTALLED
27 40 00.01	LCD TV – SEE TECHNOLOGY
27 50 00.11	VIDEO DISTRIBUTION SYSTEM

GENERAL NOTES:

1. NOT ALL POWER & DATA OUTLET/SWITCHING LOCATIONS SHOWN. CONTRACTOR TO REFER TO ELECTRICAL AND TECHNOLOGY DRAWINGS FOR LOCATIONS.
2. REFER TO DRAWING 2/A7.31 FOR FIRE EXTINGUISHER MOUNTING HEIGHTS.
3. REFER TO THE TOILET ACCESSORY SCHEDULE & LEGEND ON DRAWING A8.31 FOR ADDITIONAL INFORMATION.
4. REFER TO 3/A7.31 FOR 101116.01 EDGE DETAILS, TYP.

90% CONSTRUCTION DOCUMENTS

NOT FOR CONSTRUCTION

NORTH ARROW

KEYPLAN

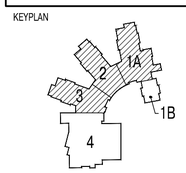

DRAWING NAME:

TYPICAL CLASSROOM PLANS & ELEVATIONS

DRAWN BY:	JMR
REVIEWED BY:	BPH
SCALE:	As Noted
JOB NO.:	1403.00
DATE:	July 25, 2016
DRAWING NUMBER:	A9.11

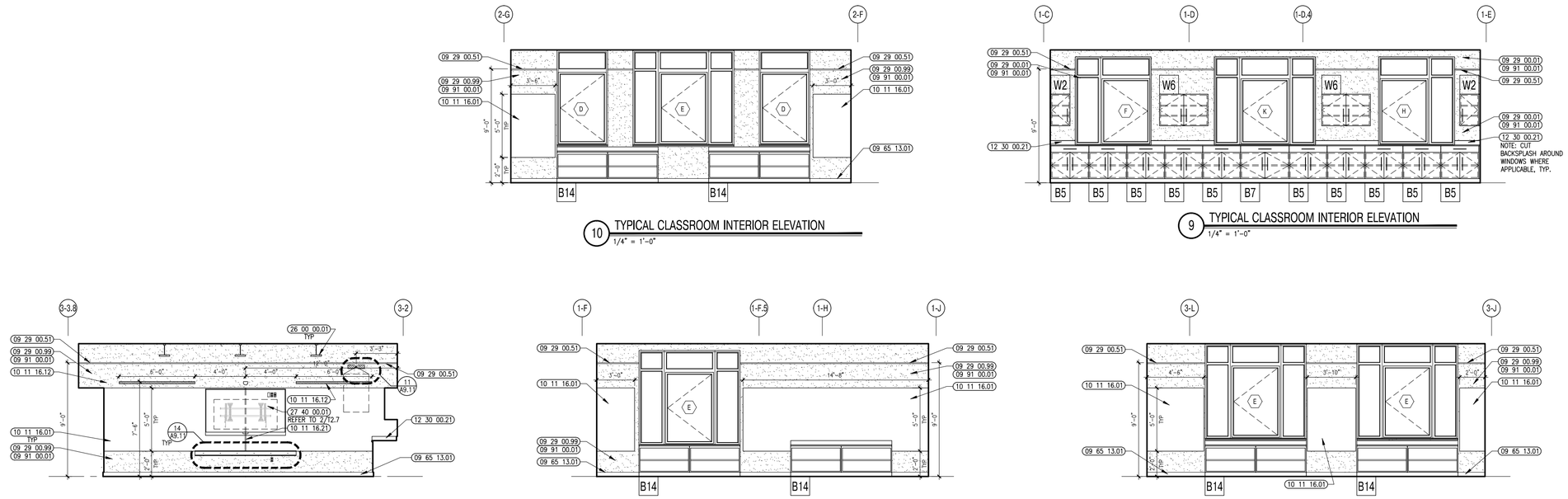

8 TYPICAL CLASSROOM INTERIOR ELEVATION
1/4" = 1'-0"

7 TYPICAL CLASSROOM INTERIOR ELEVATION
1/4" = 1'-0"

6 TYPICAL CLASSROOM INTERIOR ELEVATION
1/4" = 1'-0"

10 TYPICAL CLASSROOM INTERIOR ELEVATION
1/4" = 1'-0"

9 TYPICAL CLASSROOM INTERIOR ELEVATION
1/4" = 1'-0"

5 TYPICAL CLASSROOM INTERIOR ELEVATION
1/4" = 1'-0"

4 TYPICAL CLASSROOM INTERIOR ELEVATION
1/4" = 1'-0"

3 TYPICAL CLASSROOM INTERIOR ELEVATION
1/4" = 1'-0"

2 TYPICAL CLASSROOM INTERIOR ELEVATION
1/4" = 1'-0"

1 TYPICAL CLASSROOM ENLARGED PLAN
1/4" = 1'-0"

architects

526 Boston Post Rd Wayland, MA
508.358.0790 www.ai3architects.com

BEVERLY MIDDLE SCHOOL

CABOT STREET
BEVERLY, MA 01915

Copyright © 2016 Ai3 Architects, LLC

KEYNOTE LEGEND: (REFERENCE SHEETS A0.01 & A0.02 FOR MASTER KEYNOTE LIST AND KEYNOTES NOT LISTED)

05 50 00.85	ALUMINUM MARKER TROUGH
08 11 13.11	STEEL FRAME – SEE SCHEDULE FOR TYPES
08 14 16.01	SOLID CORE FLUSH WOOD DOOR– SEE DOOR SCHEDULE
09 29 00.01	HIGH PERFORMANCE COATING
09 29 00.51	ALUMINUM REVEAL TRIM – SATIN FINISH – 1 INCH
09 29 00.99	GYPSUM BOARD SYSTEM – LEVEL 4 FINISH – REFER TO FLOOR PLANS AND WALL TYPES FOR COMPONENTS
09 65 13.01	RUBBER BASE – 4"
09 65 19.01	VINYL COMPOSITION TILE
09 66 23.01	RESINOUS MATRIX TERRAZZO FLOORING
09 91 00.01	HIGH PERFORMANCE COATING
10 11 16.01	DRY MARKER BOARD
10 11 16.12	2 INCH TACK BOARD STRIP
10 11 16.21	DRY ERASE H-BAR SPLICE
10 44 00.03	FIRE EXTINGUISHER WALL MOUNTED BRACKET
10 44 00.11	FIRE EXTINGUISHER
12 24 00.01	ROLLER SHADE
12 30 00.21	PLASTIC LAMINATE BACKSPLASH – 4 INCH
22 00 00.01	SINK – SEE PLUMBING
22 00 00.03	WATER FOUNTAIN – SEE PLUMBING
26 00 00.01	LIGHT FIXTURE – SEE ELECTRICAL
27 40 00.01	LCD TV – SEE TECHNOLOGY
27 50 00.11	CLOCK – SEE TECHNOLOGY

GENERAL NOTES:

1. NOT ALL POWER & DATA OUTLET/SWITCHING LOCATIONS SHOWN. CONTRACTOR TO REFER TO ELECTRICAL AND TECHNOLOGY DRAWINGS FOR LOCATIONS.
2. REFER TO DRAWING 2/A7.31 FOR FIRE EXTINGUISHER MOUNTING HEIGHTS.
3. REFER TO THE TOILET ACCESSORY SCHEDULE & LEGEND ON DRAWING A8.31 FOR ADDITIONAL INFORMATION.
4. REFER TO 3/A7.31 FOR 101116.01 EDGE DETAILS, TYP.

90% CONSTRUCTION DOCUMENTS

NOT FOR CONSTRUCTION

NORTH ARROW

KEYPLAN

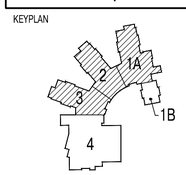

DRAWING NAME:

TYPICAL CLASSROOM ELEVATIONS & DETAILS

DRAWN BY:	JMR
REVIEWED BY:	BPH
SCALE:	As Noted
JOB NO.:	1403.00
DATE:	July 25, 2016
DRAWING NUMBER:	A9.12

FIXTURE AND FITTINGS SCHEDULE		
	MANUFACTURER	NO. / DESCRIPTION
1	Guardian Equipment	G5022BP EYEWASH/DRENCH HOSE UNIT, DECK MOUNTED, WITH BACKFLOW PREVENTER

ITEM 1 ABOVE IS FURNISHED BY 12 30 00 AND INSTALLED BY 22 00 00.

THE MANUFACTURERS AND CATALOG NUMBERS IDENTIFIED IN THIS FIXTURES AND FITTINGS SCHEDULE ARE INTENDED TO ESTABLISH A GENERAL LEVEL OF QUALITY, CONFIGURATION AND APPEARANCE REQUIRED. THIS IS NOT A PROPRIETARY SPECIFICATION AND IT SHOULD BE NOTED THAT "OR APPROVED EQUAL" APPLIES TO ALL FIXTURES AND FITTINGS DENOTED HEREIN. IT IS UNDERSTOOD THAT ALL MANUFACTURERS WILL HAVE MINOR VARIATIONS IN CONFIGURATION, APPEARANCE AND PRODUCT SPECIFICATIONS AND SUCH MINOR VARIATIONS SHALL NOT ELIMINATE SUCH MANUFACTURERS AS AN APPROVED EQUAL.

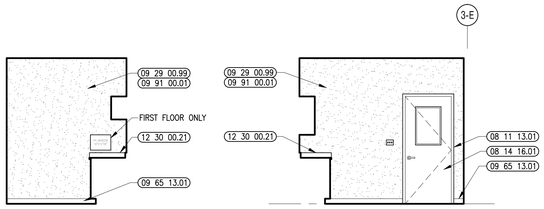

15 SCIENCE PREP ROOM ELEVATION
1/4" = 1'-0"

14 SCIENCE PREP ROOM ELEVATION
1/4" = 1'-0"

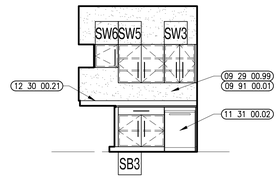

13 SCIENCE PREP ROOM ELEVATION
1/4" = 1'-0"

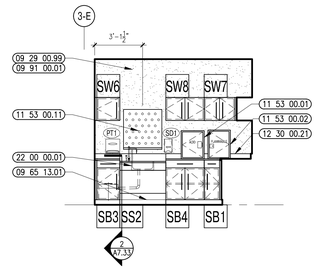

12 SCIENCE PREP ROOM ELEVATION
1/4" = 1'-0"

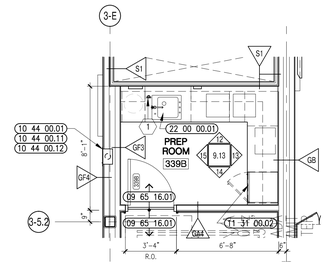

11 SCIENCE PREP ROOM ENLARGED PLAN
1/4" = 1'-0"

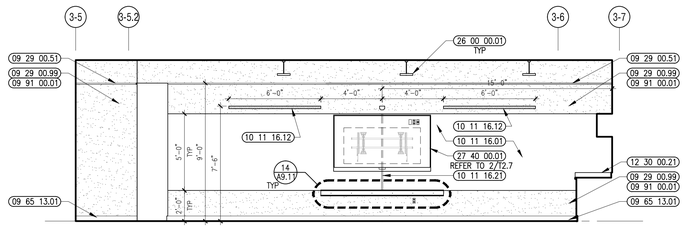

10 SCIENCE CLASSROOM 7/8 GRADES ELEVATION
1/4" = 1'-0"

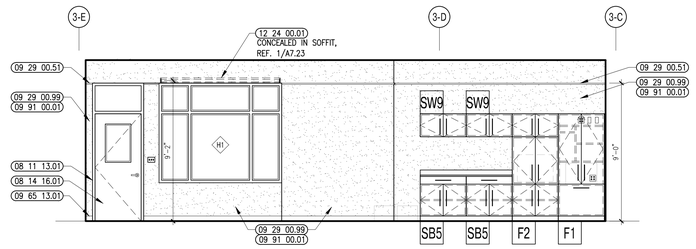

9 SCIENCE CLASSROOM 7/8 GRADES ELEVATION
1/4" = 1'-0"

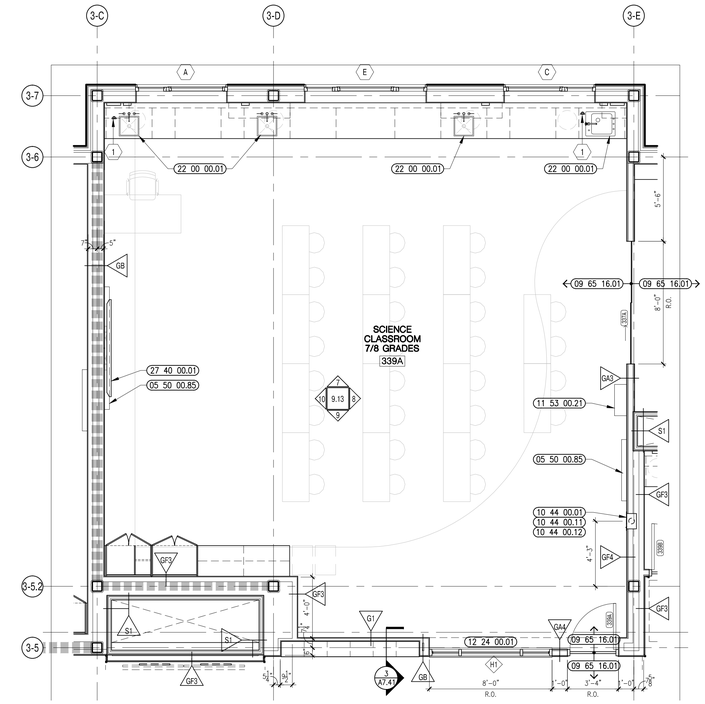

6 SCIENCE CLASSROOM 7/8 GRADES ENLARGED PLAN
1/4" = 1'-0"

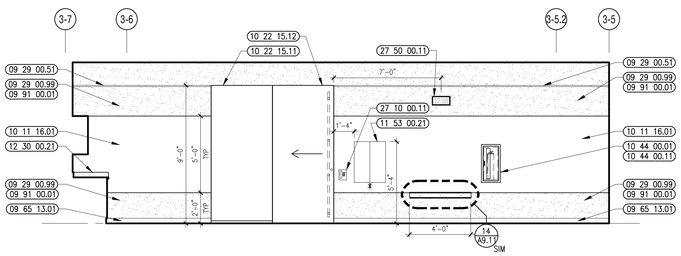

8 SCIENCE CLASSROOM 7/8 GRADES ELEVATION
1/4" = 1'-0"

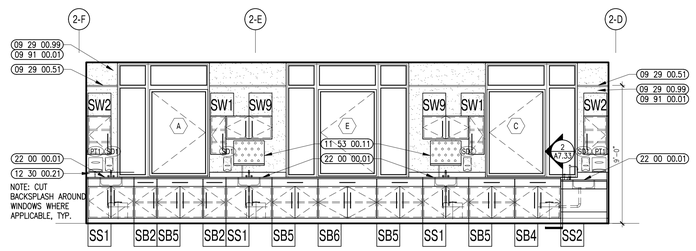

7 SCIENCE CLASSROOM 7/8 GRADES ELEVATION
1/4" = 1'-0"

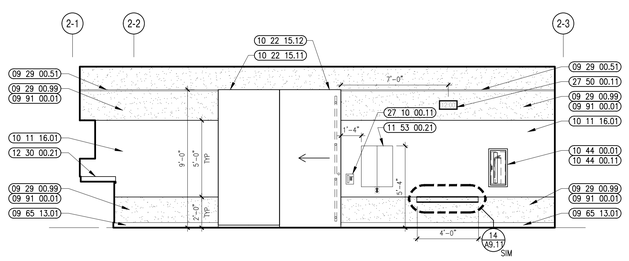

5 SCIENCE CLASSROOM 5/6 GRADES ELEVATION
1/4" = 1'-0"

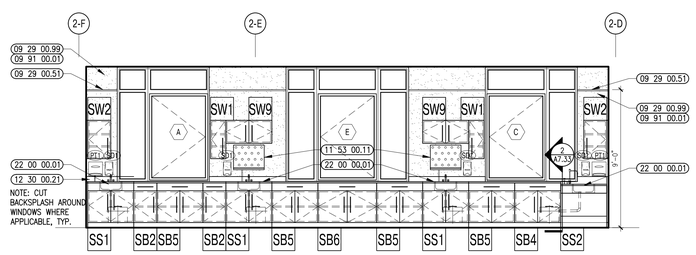

4 SCIENCE CLASSROOM 5/6 GRADES ELEVATION
1/4" = 1'-0"

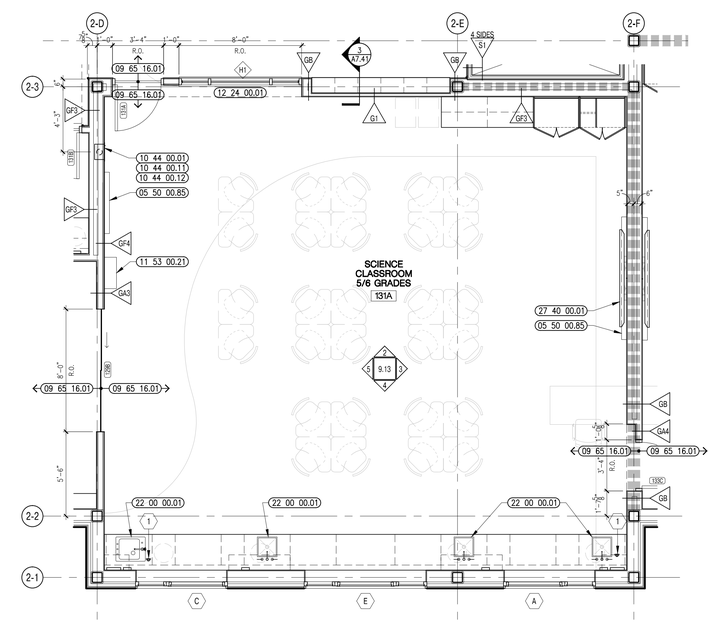

1 SCIENCE CLASSROOM 5/6 GRADES ENLARGED PLAN
1/4" = 1'-0"

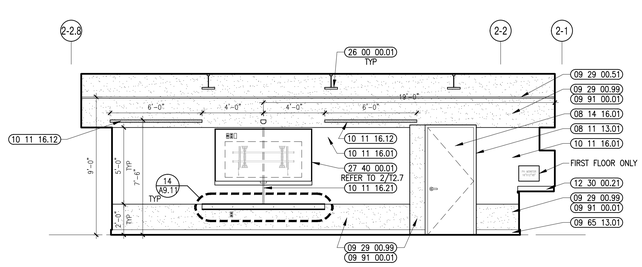

3 SCIENCE CLASSROOM 5/6 GRADES ELEVATION
1/4" = 1'-0"

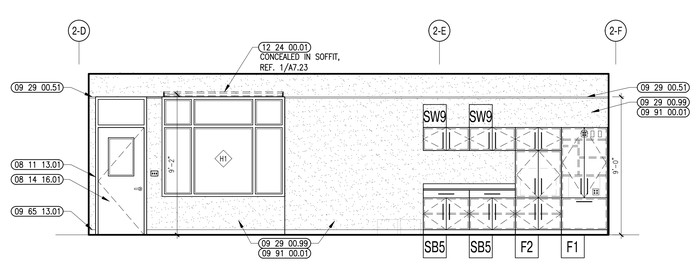

2 SCIENCE CLASSROOM 5/6 GRADES ELEVATION
1/4" = 1'-0"

A13 architects
526 Boston Post Rd Wayland, MA
508.358.0790 www.a13architects.com

BEVERLY MIDDLE SCHOOL

CABOT STREET
BEVERLY, MA 01915

Copyright © 2016 A13 Architects, LLC

KEYNOTE LEGEND: (REFERENCE SHEETS A0.01 & A0.02 FOR MASTER KEYNOTE LIST AND KEYNOTES NOT LISTED)

05 50 00.85	ALUMINUM MARKER TROUGH
08 11 13.01	DOOR AND FRAME– SEE DOOR SCHEDULE
08 14 16.01	SOLID CORE FLUSH WOOD DOOR– SEE DOOR SCHEDULE
09 29 00.01	5/8 INCH GYPSUM BOARD – LEVEL 4 FINISH
09 29 00.51	ALUMINUM REVEAL TRIM – SATIN FINISH – 1 INCH
09 29 00.99	GYPSUM BOARD SYSTEM – LEVEL 4 FINISH – REFER TO FLOOR PLANS AND WALL TYPES FOR COMPONENTS
09 65 13.01	RUBBER BASE – 4"
09 65 16.01	RESILIENT SHEET VINYL FLOORING
09 91 00.01	PAINT – SEE SCHEDULE
10 11 16.01	DRY MARKER BOARD
10 11 16.12	2 INCH TACK BOARD STRIP
10 11 16.21	DRY ERASE H-BAR SPLICE
10 22 15.11	FIXED GLASS PANEL
10 22 15.12	SLIDING GLASS DOOR
10 44 00.01	FIRE EXTINGUISHER CABINET – FULLY RECESSED
10 44 00.11	FIRE EXTINGUISHER
10 44 00.12	FIRE BLANKET
11 31 00.02	REFRIGERATOR – UNDER-COUNTER
11 53 00.01	ACID STORAGE CABINET – BENCH TOP
11 53 00.02	FLAMMABLE STORAGE CABINET – BENCH TOP
11 53 00.11	GLASSWARE PEGBOARD
11 53 00.21	SAFETY GOGGLE CABINET
12 24 00.01	ROLLER SHADE
12 30 00.21	PLASTIC LAMINATE BACKSPLASH – 4 INCH
22 00 00.01	SINK – SEE PLUMBING
26 00 00.01	LIGHT FIXTURE – SEE ELECTRICAL
27 10 00.11	TELEPHONE JACK – SEE TECHNOLOGY – TELEPHONE DEVICE TO BE OWNER FURNISHED AND INSTALLED
27 40 00.01	LCD TV – SEE TECHNOLOGY
27 50 00.11	CLOCK – SEE TECHNOLOGY

GENERAL NOTES:

1. NOT ALL POWER & DATA OUTLET/SWITCHING LOCATIONS SHOWN. CONTRACTOR TO REFER TO ELECTRICAL AND TECHNOLOGY DRAWINGS FOR LOCATIONS.
2. REFER TO DRAWING 2/A7.31 FOR FIRE EXTINGUISHER MOUNTING HEIGHTS.
3. REFER TO THE TOILET ACCESSORY SCHEDULE & LEGEND ON DRAWING A8.31 FOR ADDITIONAL INFORMATION.
4. REFER TO 3/A7.31 FOR 101116.01 EDGE DETAILS, TYP.

90% CONSTRUCTION DOCUMENTS

NOT FOR CONSTRUCTION

NORTH ARROW

KEYPLAN

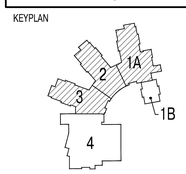

DRAWING NAME:

SCIENCE CLASSROOMS & PREP ROOM PLANS & ELEVATIONS

DRAWN BY:	JMR
REVIEWED BY:	BPH
SCALE:	As Noted
JOB NO.:	1403.00
DATE:	July 25, 2016
DRAWING NUMBER:	A9.13

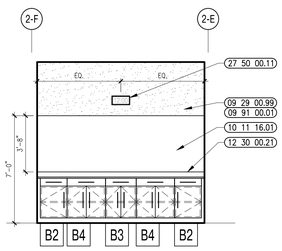

15 SMALL GROUP SEMINAR INTERIOR ELEVATION
1/4" = 1'-0"

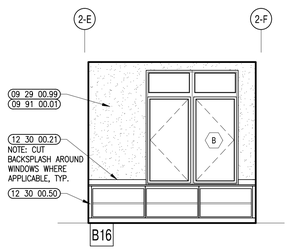

14 SMALL GROUP SEMINAR INTERIOR ELEVATION
1/4" = 1'-0"

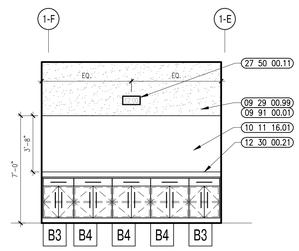

13 SMALL GROUP SEMINAR INTERIOR ELEVATION
1/4" = 1'-0"

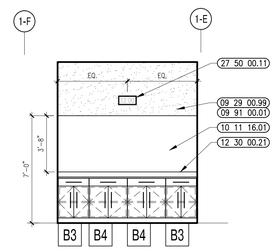

12 SMALL GROUP SEMINAR ELEV
1/4" = 1'-0"

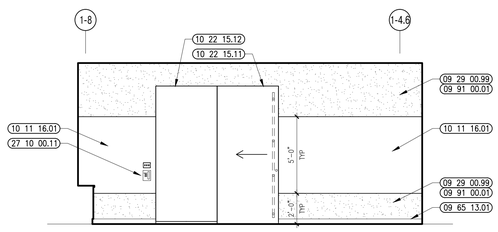

11 SMALL GROUP SEMINAR INTERIOR ELEVATION
1/4" = 1'-0"

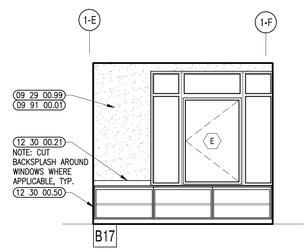

10 SMALL GROUP SEMINAR INTERIOR ELEVATION
1/4" = 1'-0"

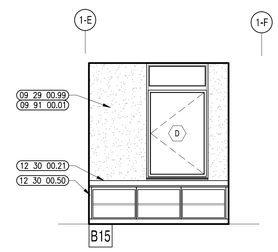

9 SMALL GROUP SEMINAR ELEV
1/4" = 1'-0"

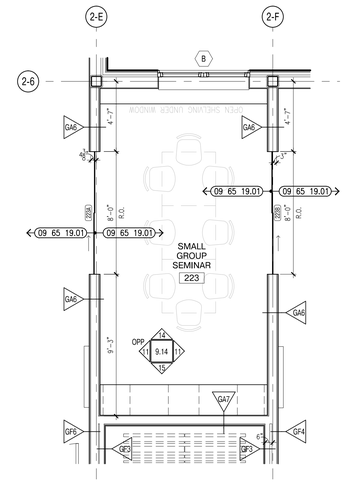

8 SMALL GROUP SEMINAR ENLARGED PLAN
1/4" = 1'-0"

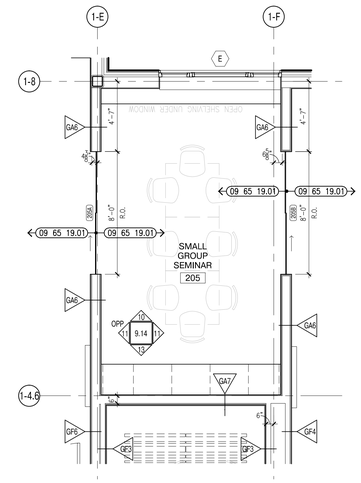

7 SMALL GROUP SEMINAR ENLARGED PLAN
1/4" = 1'-0"

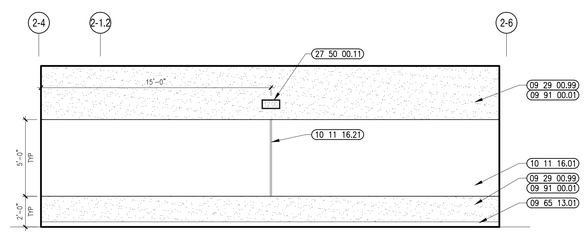

6 THERAPEUTIC LEARNING ELEVATION
1/4" = 1'-0"

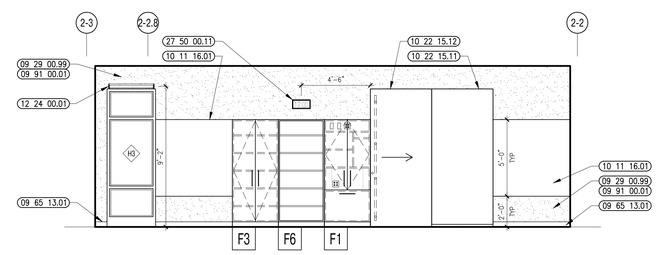

5 READING CLASSROOM INTERIOR ELEVATION
1/4" = 1'-0"

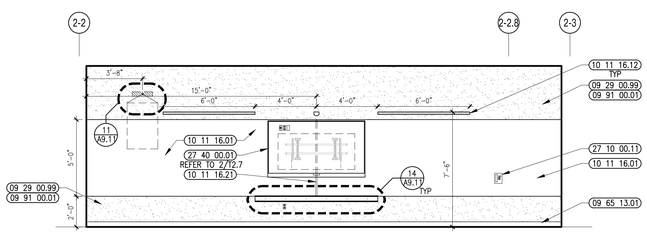

4 READING CLASSROOM INTERIOR ELEVATION
1/4" = 1'-0"

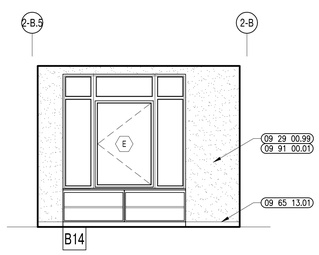

3 READING CLASSROOM INTERIOR ELEVATION
1/4" = 1'-0"

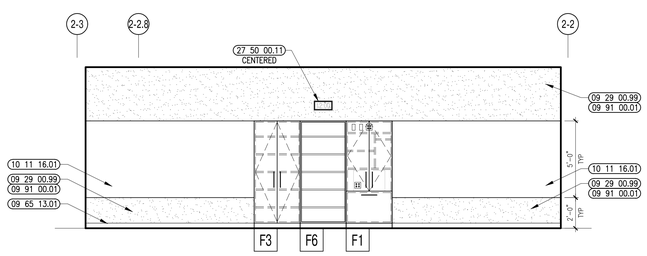

2 READING CLASSROOM INTERIOR ELEVATION
1/4" = 1'-0"

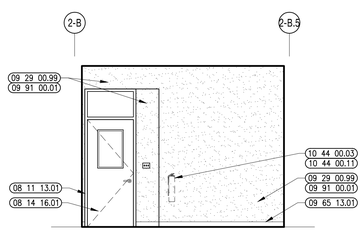

1 READING CLASSROOM INTERIOR ELEVATION
1/4" = 1'-0"

Ai3 architects
526 Boston Post Rd Wayland, MA
508.358.0790 www.ai3architects.com

BEVERLY MIDDLE SCHOOL

CABOT STREET
BEVERLY, MA 01915

Copyright © 2016 Ai3 Architects, LLC

KEYNOTE LEGEND: (REFERENCE SHEETS A0.01 & A0.02 FOR MASTER KEYNOTE LIST AND KEYNOTES NOT LISTED)

08 11 13.01	DOOR AND FRAME– SEE DOOR SCHEDULE
08 14 16.01	SOLID CORE FLUSH WOOD DOOR– SEE DOOR SCHEDULE
09 29 00.99	GYPSUM BOARD SYSTEM – LEVEL 4 FINISH – REFER TO FLOOR PLANS AND WALL TYPES FOR COMPONENTS
09 65 13.01	HIGH PERFORMANCE COATING
09 65 19.01	VINYL COMPOSITION TILE
09 91 00.01	HIGH PERFORMANCE COATING
10 11 16.01	DRY MARKER BOARD
10 11 16.12	2 INCH TACK BOARD STRIP
10 11 16.21	DRY ERASE H-BAR SPLICE
10 22 15.11	FIXED GLASS PANEL
10 22 15.12	SLIDING GLASS DOOR
10 44 00.03	FIRE EXTINGUISHER WALL MOUNTED BRACKET
10 44 00.11	FIRE EXTINGUISHER
12 30 00.21	PLASTIC LAMINATE BACKSPLASH – 4 INCH
12 30 00.50	FILLER PIECE SCRIBED TO ADJACENT SURFACE – FINISH TO MATCH CASEWORK
27 10 00.11	TELEPHONE JACK – SEE TECHNOLOGY – TELEPHONE DEVICE TO BE OWNER FURNISHED AND INSTALLED
27 40 00.01	LCD TV – SEE TECHNOLOGY
27 50 00.11	VIDEO DISTRIBUTION SYSTEM

GENERAL NOTES:

1. NOT ALL POWER & DATA OUTLET/SWITCHING LOCATIONS SHOWN. CONTRACTOR TO REFER TO ELECTRICAL AND TECHNOLOGY DRAWINGS FOR LOCATIONS.
2. REFER TO DRAWING 2/A7.31 FOR FIRE EXTINGUISHER MOUNTING HEIGHTS.
3. REFER TO THE TOILET ACCESSORY SCHEDULE & LEGEND ON DRAWING A8.31 FOR ADDITIONAL INFORMATION.
4. REFER TO 3/A7.31 FOR 101116.01 EDGE DETAILS, TYP.

90% CONSTRUCTION DOCUMENTS

NOT FOR CONSTRUCTION

NORTH ARROW

KEYPLAN

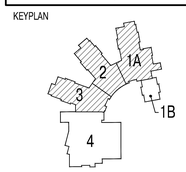

DRAWING NAME:

SMALL GROUP SEMINAR & READING CLASSROOM ELEVATIONS

DRAWN BY:	JMR
REVIEWED BY:	BPH
SCALE:	As Noted
JOB NO.:	1403.00
DATE:	July 25, 2016
DRAWING NUMBER:	A9.14

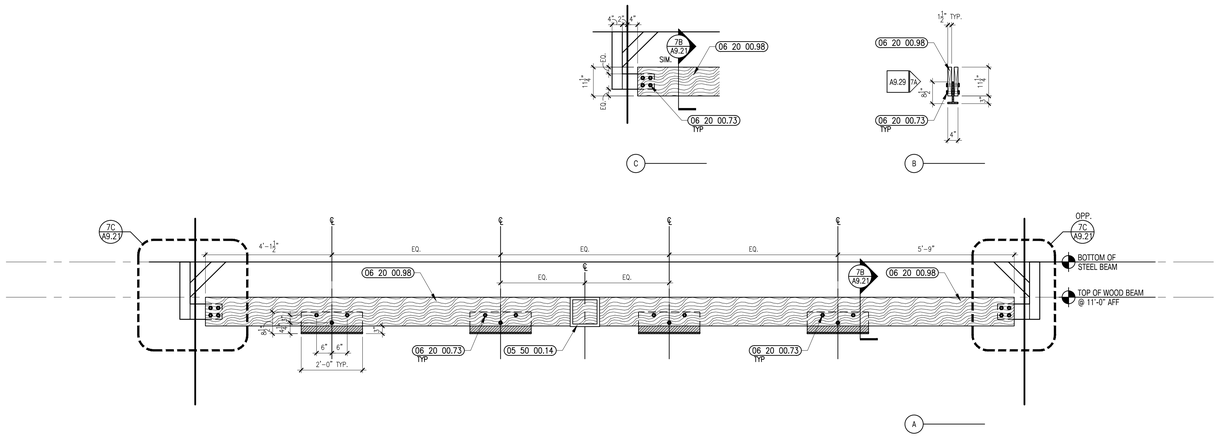

7 ACADEMIC TEAM ROOM WOOD BEAM DETAIL
1/2" = 1'-0"

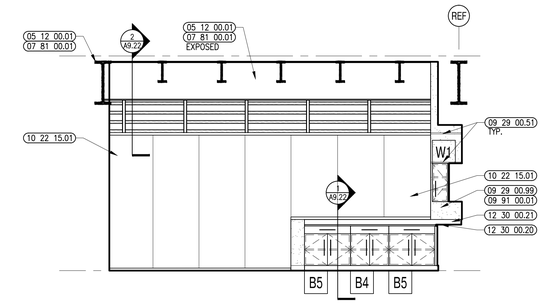

6 ACADEMIC TEAM ROOM INTERIOR ELEVATION
1/4" = 1'-0"

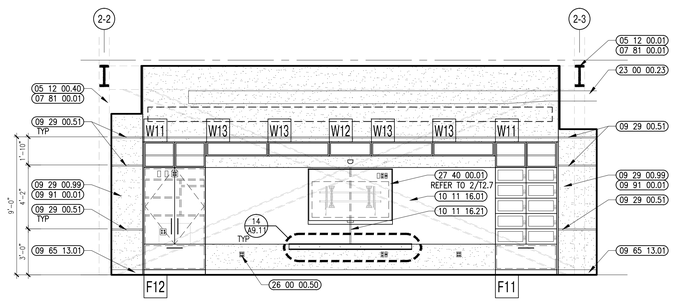

5 ACADEMIC TEAM ROOM INTERIOR ELEVATION
1/4" = 1'-0"

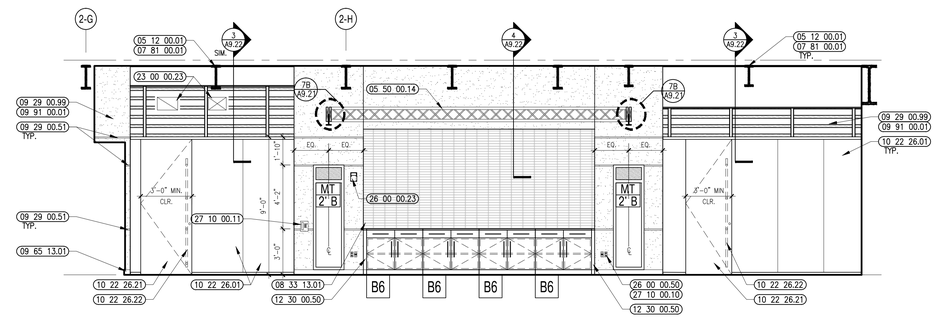

4 ACADEMIC TEAM ROOM INTERIOR ELEVATION
1/4" = 1'-0"

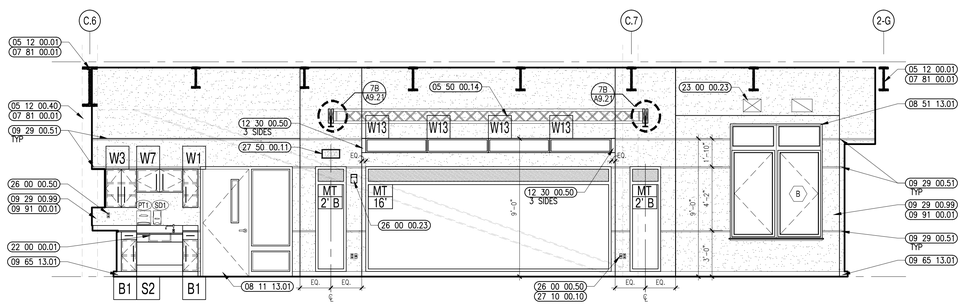

3 ACADEMIC TEAM ROOM INTERIOR ELEVATION
1/4" = 1'-0" DRAWN FLAT - TYPICAL

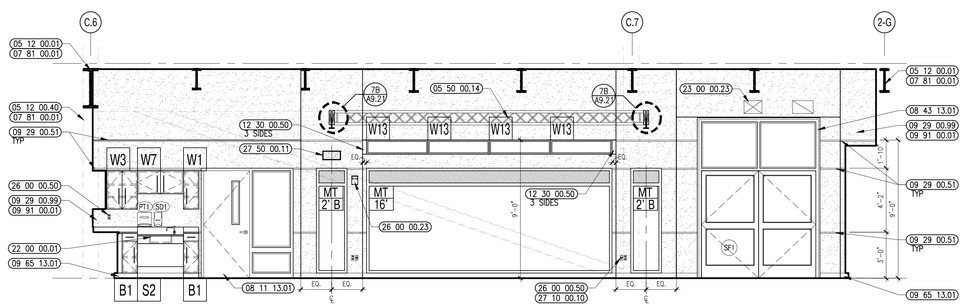

2 ACADEMIC TEAM ROOM INTERIOR ELEVATION
1/4" = 1'-0" DRAWN FLAT - FIRST FLOOR

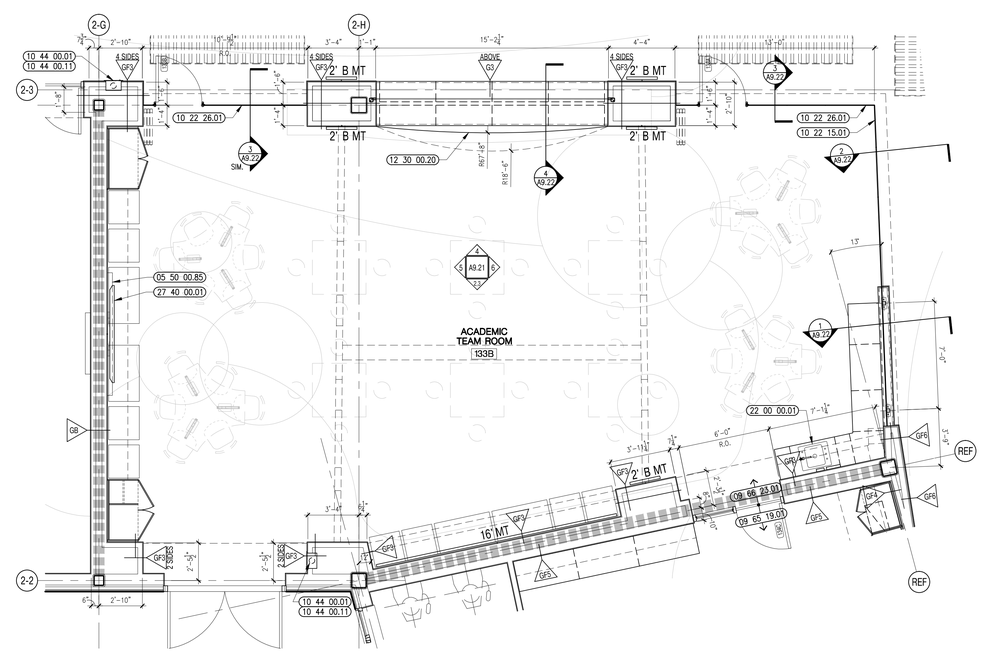

1 ACADEMIC TEAM ROOM ENLARGED PLAN
1/4" = 1'-0"

526 Boston Post Rd Wayland, MA
508.358.0790 www.ai3architects.com

BEVERLY MIDDLE SCHOOL

CABOT STREET
BEVERLY, MA 01915

Copyright © 2016 A13 Architects, LLC

KEYNOTE LEGEND: (REFERENCE SHEETS A0.01 & A0.02 FOR MASTER KEYNOTE LIST AND KEYNOTES NOT LISTED)

05 12 00.01	STEEL BEAM – SEE STRUCTURAL
05 12 00.40	BRACE FRAME – SEE STRUCTURAL
05 50 00.14	ALUMINUM CEILING TRUSS
05 50 00.85	ALUMINUM MARKER TROUGH
06 20 00.73	STAINLESS STEEL BOLTS – NUTS AND WASHERS – 1/2 INCH DIA
06 20 00.98	WOOD BLOCKING – FIRE RETARDANT TREATED – SIZE AS REQUIRED
07 81 00.01	CEMENTITIOUS FIREPROOFING
08 11 13.01	DOOR AND FRAME– SEE DOOR SCHEDULE
08 33 13.01	TYPE 1 – INTERIOR – 6'-6"H x 16'-2"W – POWER OPERATED
08 43 13.01	ALUMINUM STOREFRONT FRAME
08 51 13.01	ALUMINUM WINDOW – SEE SCHEDULE
09 29 00.51	ALUMINUM REVEAL TRIM – SATIN FINISH – 1 INCH
09 29 00.99	GYPSUM BOARD SYSTEM – LEVEL 4 FINISH – REFER TO FLOOR PLANS AND WALL TYPES FOR COMPONENTS
09 65 13.01	RUBBER BASE – 4"
09 65 19.01	HIGH PERFORMANCE COATING
09 66 23.01	RESINOUS MATRIX TERRAZZO FLOORING
09 91 00.01	PAINT – SEE SCHEDULE
10 11 16.01	DRY MARKER BOARD
10 11 16.21	DRY ERASE H-BAR SPLICE
10 22 15.01	INTERIOR GLASS WALL SYSTEM
10 22 26.01	INTERIOR OPERABLE GLASS PARTITION PANEL
10 22 26.21	OPERABLE GLASS PARTITION HINGE DOOR
10 22 26.22	OPERABLE GLASS PARTITION DOOR PULL HARDWARE
10 44 00.01	FIRE EXTINGUISHER CABINET – FULLY RECESSED
10 44 00.11	FIRE EXTINGUISHER
12 30 00.20	PLASTIC LAMINATE COUNTERTOP
12 30 00.21	PLASTIC LAMINATE BACKSPLASH – 4 INCH
12 30 00.50	FILLER PIECE SCRIBED TO ADJACENT SURFACE – FINISH TO MATCH CASEWORK
22 00 00.01	SINK – SEE PLUMBING
23 00 00.23	DUCT – SEE HVAC
26 00 00.23	FIRE ALARM AUDIO/VISUAL UNIT – SEE ELECTRICAL
26 00 00.50	ELECTRICAL OUTLET – SEE ELECTRICAL
27 10 00.10	DATA OUTLET – SEE TECHNOLOGY
27 10 00.11	TELEPHONE JACK – SEE TECHNOLOGY – TELEPHONE DEVICE TO BE OWNER FURNISHED AND INSTALLED
27 40 00.01	LCD TV – SEE TECHNOLOGY
27 50 00.11	CLOCK – SEE TECHNOLOGY

GENERAL NOTES:

1. NOT ALL POWER AND DATA OUTLET/SWITCHING LOCATIONS SHOWN. COORDINATE WITH ELECTRICAL AND TECHNOLOGY DRAWINGS FOR ALL LOCATIONS.
2. REFER TO DETAIL 2/A7.31 FOR FIRE EXTINGUISHER DETAILS AND MOUNTING HEIGHTS.

90% CONSTRUCTION DOCUMENTS

NOT FOR CONSTRUCTION

NORTH ARROW

KEYPLAN

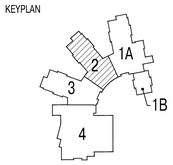

DRAWING NAME:

ACADEMIC TEAM ROOM ENLARGED PLAN, ELEVATIONS, & DETAILS

DRAWN BY:	MJR
REVIEWED BY:	BPH
SCALE:	As Noted
JOB NO.:	1403.00
DATE:	July 25, 2016
DRAWING NUMBER:	A9.21

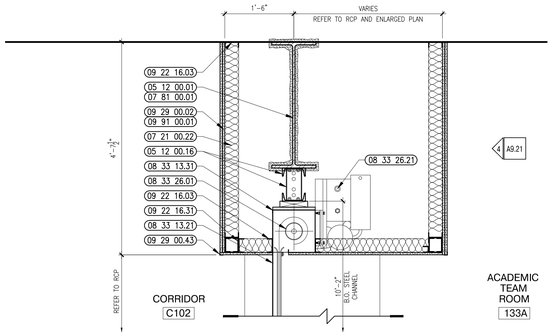

4 ACADEMIC TEAM ROOM SECURITY GATE DETAIL
3/4" = 1'-0"

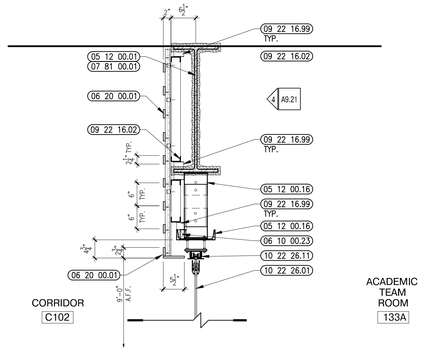

3 ACADEMIC TEAM ROOM SOFFIT DETAIL
3/4" = 1'-0"

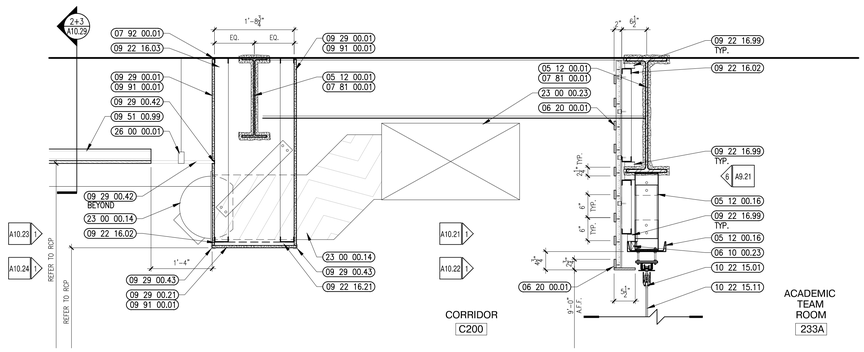

2 ACADEMIC TEAM ROOM SOFFIT DETAIL
3/4" = 1'-0"

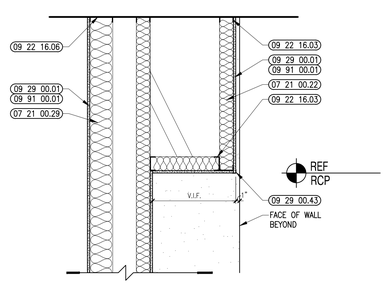

5 ACADEMIC TEAM ROOM SOFFIT DETAIL
3/4" = 1'-0"

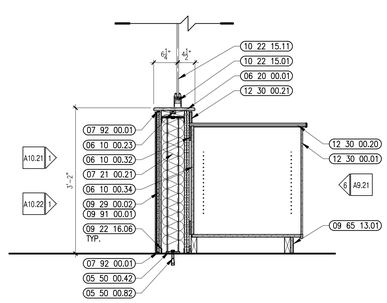

1 ACADEMIC TEAM ROOM SOFFIT DETAIL
3/4" = 1'-0"

A13 architects
526 Boston Post Rd Wayland, MA
508.358.0790 www.a13architects.com

BEVERLY MIDDLE SCHOOL

CABOT STREET
BEVERLY, MA 01915

Copyright © 2016 A13 Architects, LLC

KEYNOTE LEGEND: (REFERENCE SHEETS A0.01 & A0.02 FOR MASTER KEYNOTE LIST AND KEYNOTES NOT LISTED)

05 12 00.01	STEEL BEAM – SEE STRUCTURAL
05 12 00.16	STEEL CHANNEL – SEE STRUCTURAL
05 50 00.42	STEEL PLATE – 5/16 INCH THICK
05 50 00.82	EXPANSION BOLT
06 10 00.23	WOOD BLOCKING – FIRE RETARDANT TREATED – SIZE AS NOTED OR DRAWN
06 10 00.32	PLYWOOD – 1/2 INCH
06 10 00.34	PLYWOOD – 3/4 INCH
06 20 00.01	HARDWOOD MILLWORK – TRANSPARENT FINISH
07 21 00.21	GLASS FIBER ACOUSTICAL BLANKET INSULATION – 6 INCH – UNFACED
07 21 00.22	GLASS FIBER ACOUSTICAL BLANKET INSULATION – 3 1/2 INCH – UNFACED
07 21 00.29	GLASS FIBER ACOUSTICAL BLANKET INSULATION – MATCH DEPTH OF STUD – UNFACED
07 81 00.01	CEMENTITIOUS FIREPROOFING
07 92 00.01	JOINT SEALANT – TYPE AS REQUIRED
08 33 13.21	VERTICAL GUIDES
08 33 13.31	COILING DOOR HOUSING
08 33 26.01	TYPE OHG1 – 15'-1"W x 6'-6"H – POWER OPERATED
08 33 26.21	ELECTRIC MOTOR
09 22 16.02	METAL STUD 2-1/2 INCH – 16 INCHES O.C. MAX
09 22 16.03	METAL STUD 3-5/8 INCH – 16 INCHES O.C. MAX
09 22 16.06	METAL STUD 6 INCH – 16 INCHES O.C. MAX
09 22 16.21	METAL FURRING CHANNEL – 7/8 INCH – 16 INCHES O.C. MAX
09 22 16.31	BOXED HEADER
09 22 16.99	METAL CLIP FOR WALL FRAMING – 16 GA. – 24 INCHES O.C. MAX
09 29 00.01	5/8 INCH GYPSUM BOARD – LEVEL 4 FINISH
09 29 00.02	5/8 INCH GYPSUM BOARD – 2 LAYERS – LEVEL 4 FINISH
09 29 00.21	5/8 INCH GYPSUM BOARD – SAG-RESISTANT – LEVEL 4 FINISH
09 29 00.42	REVEAL – PAINTABLE 3/4 INCH
09 29 00.43	CORNER BEAD
09 51 00.99	ACOUSTICAL CEILING – REFERENCE REFLECTED CEILING PLANS FOR TYPE AND HEIGHT
09 65 13.01	RUBBER BASE – 4"
09 91 00.01	PAINT – SEE SCHEDULE
10 22 15.01	INTERIOR GLASS WALL SYSTEM
10 22 15.11	FIXED GLASS PANEL
10 22 26.01	INTERIOR OPERABLE GLASS PARTITION PANEL
10 22 26.11	OPERABLE GLASS PARTITION PANEL TRACK ASSEMBLY
12 30 00.01	BASE CABINET
12 30 00.20	PLASTIC LAMINATE COUNTERTOP
12 30 00.21	PLASTIC LAMINATE BACKSPLASH – 4 INCH
23 00 00.14	VENT – SEE HVAC
23 00 00.23	DUCT – SEE HVAC
26 00 00.01	LIGHT FIXTURE – SEE ELECTRICAL

GENERAL NOTES:

1. NOT ALL POWER AND DATA OUTLET/SWITCHING LOCATIONS SHOWN. COORDINATE WITH ELECTRICAL AND TECHNOLOGY DRAWINGS FOR ALL LOCATIONS.
2. REFER TO DETAIL 2/A7.31 FOR FIRE EXTINGUISHER DETAILS AND MOUNTING HEIGHTS.

90% CONSTRUCTION DOCUMENTS

NOT FOR CONSTRUCTION

NORTH ARROW

KEYPLAN

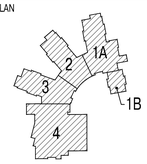

DRAWING NAME:

ACADEMIC TEAM ROOM DETAILS

DRAWN BY:	MJR
REVIEWED BY:	BPH
SCALE:	As Noted
JOB NO.:	1403.00
DATE:	July 25, 2016
DRAWING NUMBER:	A9.22

EQUIPMENT LIST

SYMB.	ITEM	MANUFACTURER	MODEL #	OVERALL SIZE LxWxH	QTY.	REMARKS
	WOOD ENGINEERING FABRICATION					
1	24" LATHE, 4224	POWERMATIC	TD1624	70" x 26 3/4" x 60"	1	1SHP, 208V, 1 OR 3-PH
2	18" DRILL PRESS	POWERMATIC	1792800	31 1/2" x 20" x 50"	1	1 SHP, 208/230V, 3-PH, 1-PH
3	CNC ROUTER	SHOPBOT	PRSALPLUS 48-48	70" x 70" x 48"	1	0
4	16-FOOT SLAB SAW	POWERMATIC	PM1500/1500J/1500		1	5 HP/STAND & LIGHT, 15 AMPS
5	BAND SAW	POWERMATIC	PM2826	36" x 36" x 97"	1	1 SHP, 3-PH, 208/240V
6	COMPOUND MITER SAW	MAKITA	LS1016	25 1/2" x 20 1/2" x 28 1/4"	1	0
7	PORTABLE DUST COLLECTOR	DELTA	50-850	27" x 27" x 50"	1	1 SHP, 208V, 3PH, 9A600PM+ PROVIDE FLEXIBLE HOSE ATTACHMENT
8	MILLING MACHINE	MINITECH MACHINERY CORP	CM S AXIS CNC	9" x 22 1/2"	1	0.5/.9HP, 110/230V, 7EM
	METAL ENGINEERING FABRICATION					
20	PORTABLE MIG WELDER	MILLER	MILLERMATIC 251	9" X 19" X 20"	1	0.208 VOLT/16 AMPS/ SINGLE PHASE

Ai3 architects

526 Boston Post Rd Wayland, MA
508.358.0790 www.ai3architects.com

BEVERLY MIDDLE SCHOOL

CABOT STREET
BEVERLY, MA 01915

Copyright © 2016 Ai3 Architects, LLC

KEYNOTE LEGEND: (REFERENCE SHEETS A0.01 & A0.02 FOR MASTER KEYNOTE LIST AND KEYNOTES NOT LISTED)

03 30 00.03	CONCRETE SLAB ON DECK – SEE STRUCTURAL
05 12 00.01	STEEL BEAM – SEE STRUCTURAL
05 12 00.40	BRACE FRAME – SEE STRUCTURAL
06 20 00.01	HARDWOOD MILLWORK – TRANSPARENT FINISH
06 20 00.31	HARDWOOD VENEER PLYWOOD – 1/2 INCH – TRANSPARENT FINISH
06 20 00.56	PEGBOARD – 1/4 INCH THICK
07 21 00.29	GLASS FIBER ACOUSTICAL BLANKET INSULATION – MATCH DEPTH OF STUD – UNFACED
07 81 00.01	CEMENTITIOUS FIREPROOFING
08 11 13.01	DOOR AND FRAME– SEE DOOR SCHEDULE
08 14 16.01	SOLID CORE FLUSH WOOD DOOR– SEE DOOR SCHEDULE
08 33 13.31	COILING DOOR HOUSING
08 33 26.11	ELECTRIC MOTOR
08 33 26.12	GUIDE
08 51 13.01	ALUMINUM WINDOW – SEE SCHEDULE
08 51 13.02	PERIMETER SEALANT
09 22 16.02	METAL STUD 2–1/2 INCH – 16 INCHES O.C. MAX
09 22 16.03	METAL STUD 3–5/8 INCH – 16 INCHES O.C. MAX
09 22 16.31	BOXED HEADER
09 22 16.99	METAL CLIP FOR WALL FRAMING – 16 GA. – 24 INCHES O.C. MAX
09 29 00.02	5/8 INCH GYPSUM BOARD – 2 LAYERS – LEVEL 4 FINISH
09 29 00.21	5/8 INCH GYPSUM BOARD – SAG–RESISTANT – LEVEL 4 FINISH
09 29 00.43	CORNER BEAD
09 29 00.51	ALUMINUM REVEAL TRIM – SATIN FINISH – 1 INCH
09 29 00.99	GYPSUM BOARD SYSTEM – LEVEL 4 FINISH – REFER TO FLOOR PLANS AND WALL TYPES FOR COMPONENTS
09 65 13.01	RUBBER BASE – 4"
09 65 19.01	VINYL COMPOSITION TILE
09 66 23.01	RESINOUS MATRIX TERRAZZO FLOORING
09 84 00.01	ACOUSTICAL PANEL – WALL MOUNTED – TYPE 1
09 91 00.01	PAINT – SEE SCHEDULE
10 22 26.02	EXTERIOR OPERABLE GLASS PARTITION PANEL
10 44 00.01	FIRE EXTINGUISHER CABINET – FULLY RECESSED
10 44 00.03	FIRE EXTINGUISHER WALL MOUNTED BRACKET
10 44 00.11	FIRE EXTINGUISHER
11 53 00.01	GOOGLE CABINET
12 30 00.20	PLASTIC LAMINATE COUNTERTOP
12 30 00.21	PLASTIC LAMINATE BACKSPLASH – 4 INCH
12 30 00.31	STEEL UNDER COUNTER SUPPORT BRACKET – SIZE AS NOTED OR DRAWN
22 00 00.01	SINK – SEE PLUMBING
22 00 00.70	EMERGENCY EYEWASH/SHOWER STATION
23 00 00.14	VENT – SEE HVAC
26 00 00.01	LIGHT FIXTURE – SEE ELECTRICAL
26 00 00.27	FIRE BEACON – SEE ELECTRICAL
26 00 00.50	ELECTRICAL OUTLET – SEE ELECTRICAL
26 00 00.98	EMERGENCY SHUT OFF – SEE ELECTRICAL
26 00 00.99	ELECTRICAL PANEL – SEE ELECTRICAL
27 10 00.11	TELEPHONE JACK – SEE TECHNOLOGY – TELEPHONE DEVICE TO BE OWNER FURNISHED AND INSTALLED
27 40 00.02	CAMERA – SEE TECHNOLOGY
27 50 00.11	CLOCK – SEE TECHNOLOGY

GENERAL NOTES:

1. REFER TO DETAIL 2/A7.31 FOR FIRE EXTINGUISHER DETAILS AND MOUNTING HEIGHTS.

90% CONSTRUCTION DOCUMENTS

NOT FOR CONSTRUCTION

NORTH ARROW

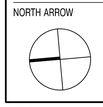

KEYPLAN

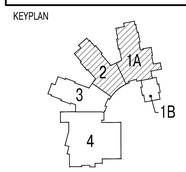

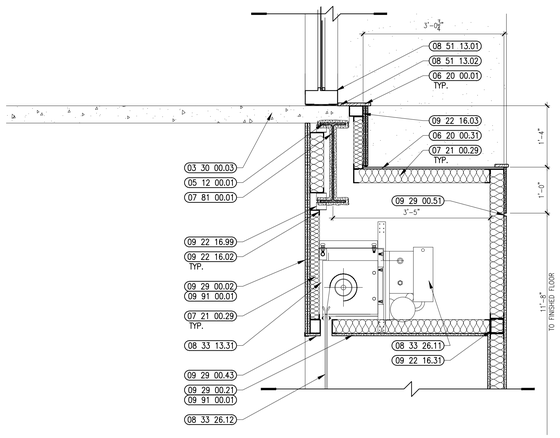

6 TECHNOLOGY APP & PRODUCT LAB SOFFIT DETAIL
3/4" = 1'–0"

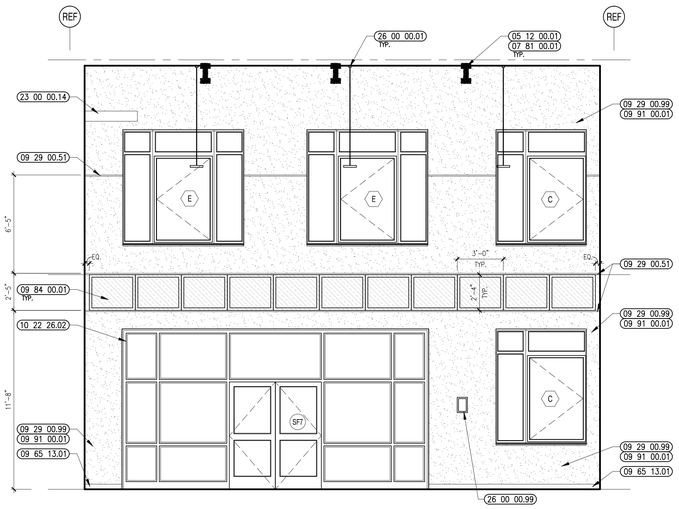

5 TECHNOLOGY APP & PRODUCT LAB ENLARGED INTERIOR ELEVATION
1/4" = 1'–0"

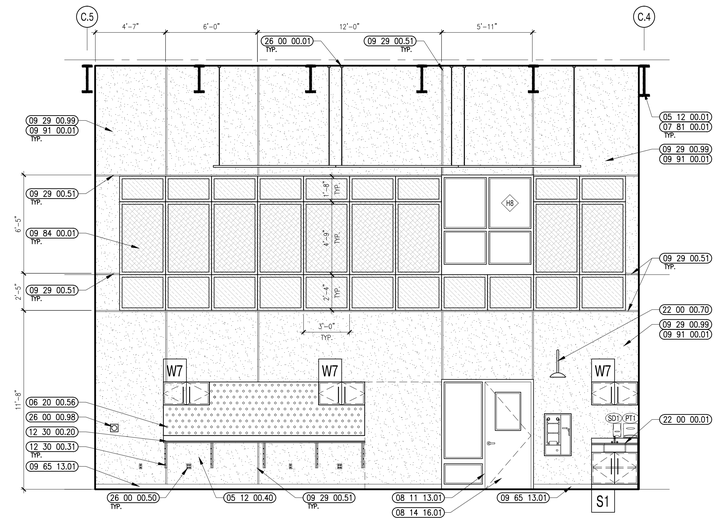

4 TECHNOLOGY APP & PRODUCT LAB INTERIOR ELEVATION
1/4" = 1'–0"

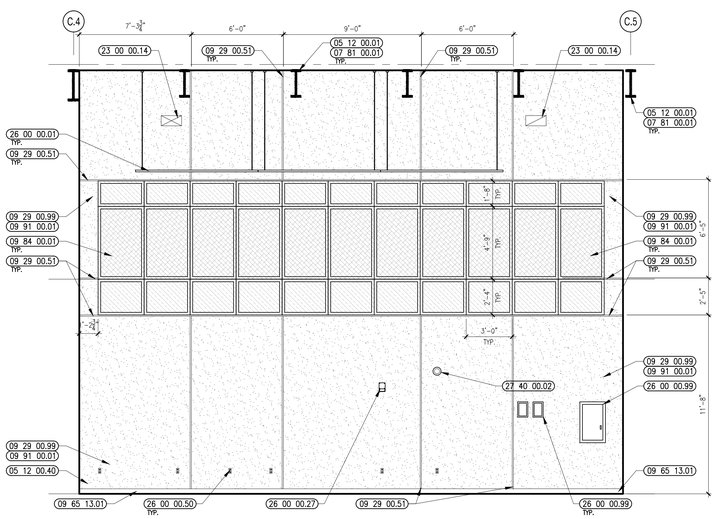

3 TECHNOLOGY APP & PRODUCT LAB ENLARGED INTERIOR ELEVATION
1/4" = 1'–0"

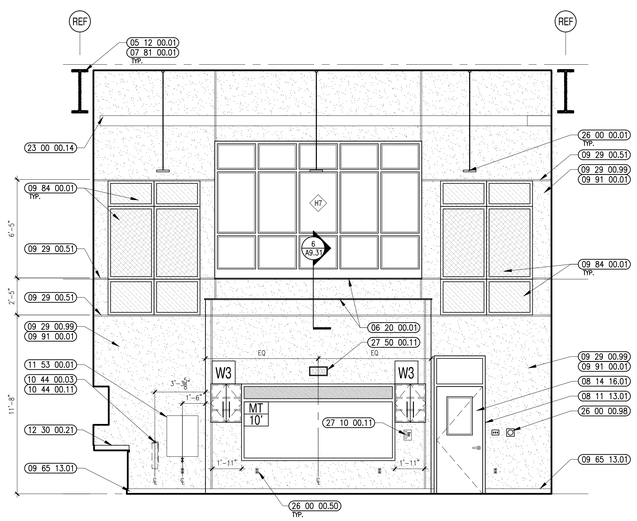

2 TECHNOLOGY APP & PRODUCT LAB ENLARGED INTERIOR ELEVATION
1/4" = 1'–0"

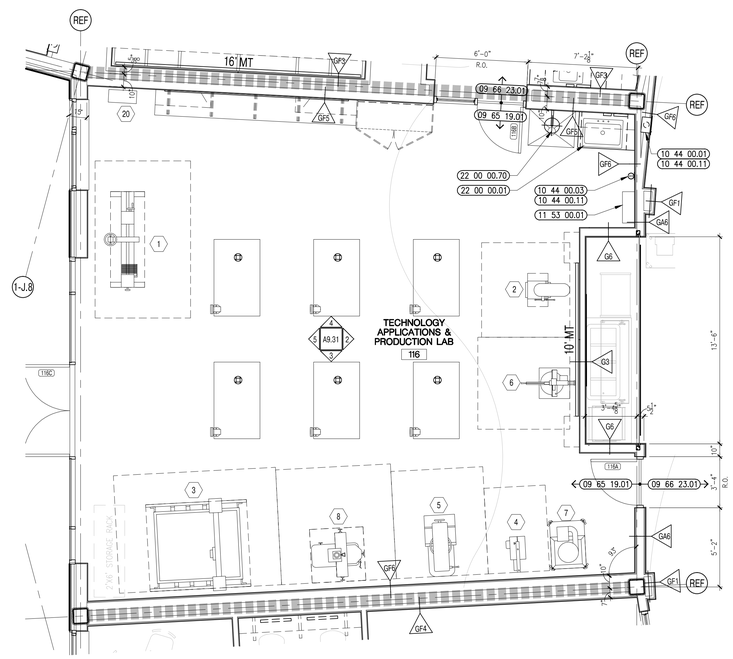

1 TECHNOLOGY APP & PRODUCT LAB ENLARGED PLAN
1/4" = 1'–0"

DRAWING NAME:

TECHNOLOGY APP & PRODUCT LAB ENLARGED PLAN & ELEVATIONS

DRAWN BY:	MJR
REVIEWED BY:	BPH
SCALE: As Noted	DRAWING NUMBER:
JOB NO.: 1403.00	A9.31
DATE: July 25, 2016	

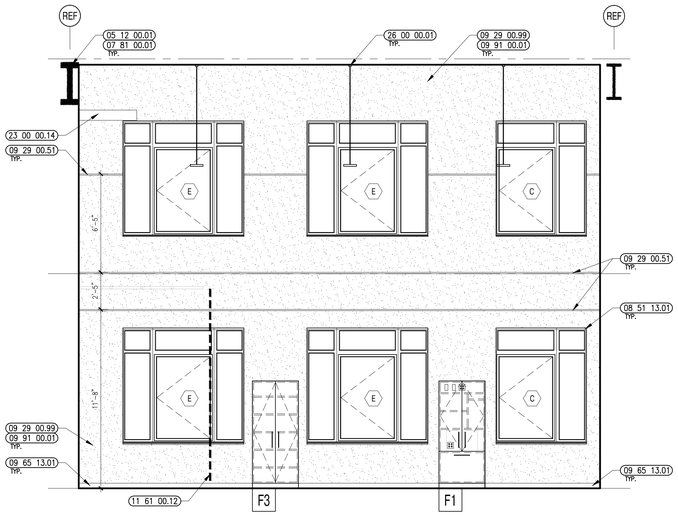

5 MULTIMEDIA & VIDEO APPLICATIONS LAB INTERIOR ELEVATION
1/4" = 1'-0"

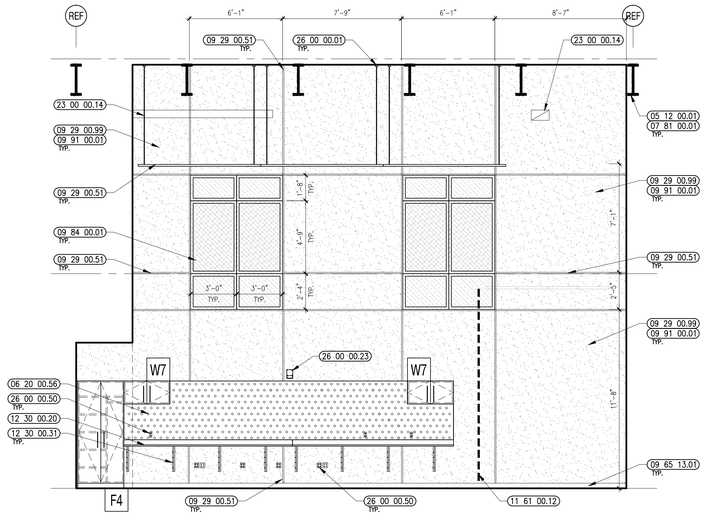

4 MULTIMEDIA & VIDEO APPLICATIONS LAB INTERIOR ELEVATION
1/4" = 1'-0"

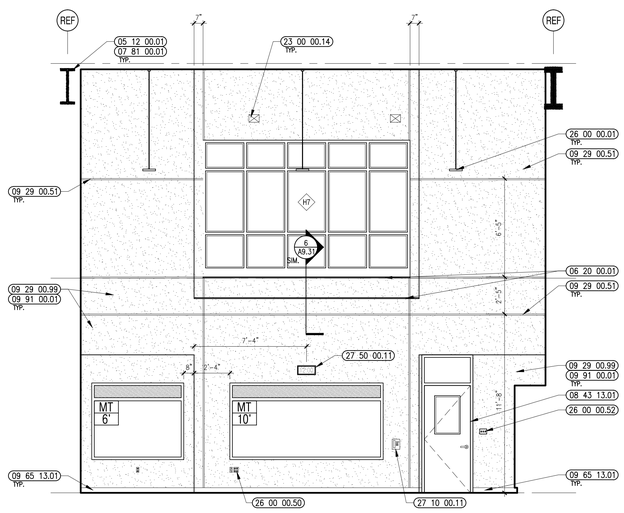

3 MULTIMEDIA & VIDEO APPLICATIONS LAB INTERIOR ELEVATION
1/4" = 1'-0"

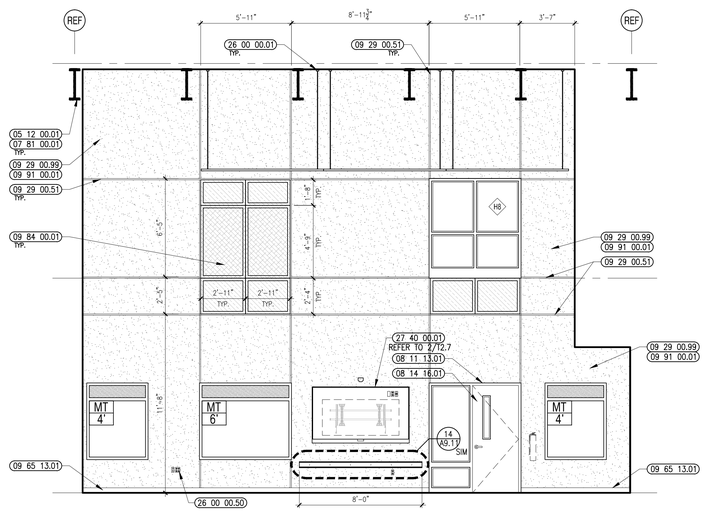

2 MULTIMEDIA & VIDEO APPLICATIONS LAB INTERIOR ELEVATION
1/4" = 1'-0"

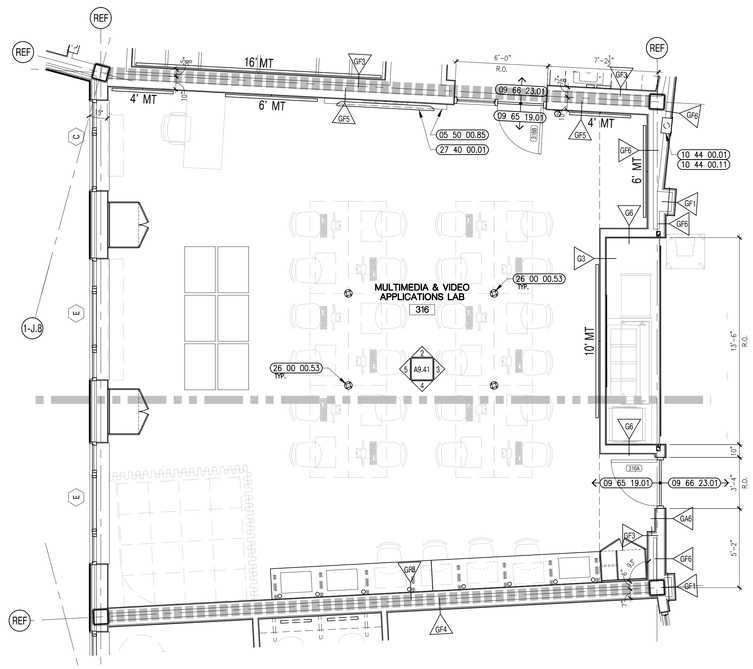

1 MULTIMEDIA AND VIDEO APP LAB ENLARGED PLAN
1/4" = 1'-0"

526 Boston Post Rd Wayland, MA
508.358.0790 www.ai3architects.com

BEVERLY MIDDLE SCHOOL

CABOT STREET
BEVERLY, MA 01915

Copyright © 2016 Ai3 Architects, LLC

KEYNOTE LEGEND: (REFERENCE SHEETS A0.01 & A0.02 FOR MASTER KEYNOTE LIST AND KEYNOTES NOT LISTED)

05 12 00.01	STEEL BEAM – SEE STRUCTURAL
05 50 00.85	ALUMINUM MARKER TROUGH
06 20 00.01	HARDWOOD MILLWORK – TRANSPARENT FINISH
06 20 00.56	PEGBOARD – 1/4 INCH THICK
07 81 00.01	CEMENTITIOUS FIREPROOFING
08 11 13.01	DOOR AND FRAME– SEE DOOR SCHEDULE
08 14 16.01	SOLID CORE FLUSH WOOD DOOR– SEE DOOR SCHEDULE
08 43 13.01	ALUMINUM STOREFRONT FRAME
08 51 13.01	ALUMINUM WINDOW – SEE SCHEDULE
09 29 00.51	ALUMINUM REVEAL TRIM – SATIN FINISH – 1 INCH
09 29 00.99	GYPSUM BOARD SYSTEM – LEVEL 4 FINISH – REFER TO FLOOR PLANS AND WALL TYPES FOR COMPONENTS
09 65 13.01	RUBBER BASE – 4"
09 65 19.01	VINYL COMPOSITION TILE
09 66 23.01	RESINOUS MATRIX TERRAZZO FLOORING
09 84 00.01	ACOUSTICAL PANEL – WALL MOUNTED – TYPE 1
09 91 00.01	PAINT – SEE SCHEDULE
10 44 00.01	FIRE EXTINGUISHER CABINET – FULLY RECESSED
10 44 00.11	FIRE EXTINGUISHER
11 61 00.12	CURTAIN – CYCLORAMA
12 30 00.20	PLASTIC LAMINATE COUNTERTOP
12 30 00.31	STEEL UNDER COUNTER SUPPORT BRACKET – SIZE AS NOTED OR DRAWN
23 00 00.14	VENT – SEE HVAC
26 00 00.01	LIGHT FIXTURE – SEE ELECTRICAL
26 00 00.23	FIRE ALARM AUDIO/VISUAL UNIT – SEE ELECTRICAL
26 00 00.50	ELECTRICAL OUTLET – SEE ELECTRICAL
26 00 00.52	LIGHT SWITCH – SEE ELECTRICAL
26 00 00.53	ELECTRICAL RETRACTABLE OVERHEAD OUTLET – SEE ELECTRICAL
27 10 00.11	TELEPHONE JACK – SEE TECHNOLOGY – TELEPHONE DEVICE TO BE OWNER FURNISHED AND INSTALLED
27 40 00.01	LCD TV – SEE TECHNOLOGY
27 50 00.11	CLOCK – SEE TECHNOLOGY

90% CONSTRUCTION DOCUMENTS

NOT FOR CONSTRUCTION

NORTH ARROW

KEYPLAN

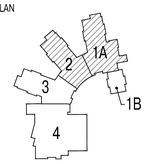

DRAWING NAME:

MULTIMEDIA & VIDEO APP LAB ENLARGED PLAN & ELEVATIONS

DRAWN BY:	MJR
REVIEWED BY:	BPH
SCALE:	As Noted
JOB NO.:	1403.00
DATE:	July 25, 2016
DRAWING NUMBER:	A9.41

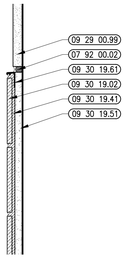

10 CERAMIC TILE DETAIL
1" = 1'-0"

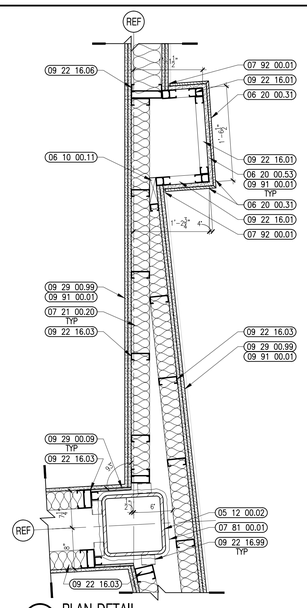

9 PLAN DETAIL
1" = 1'-0"

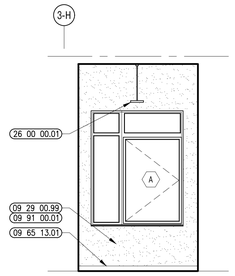

8 KILN INTERIOR ELEVATION
1/4" = 1'-0"

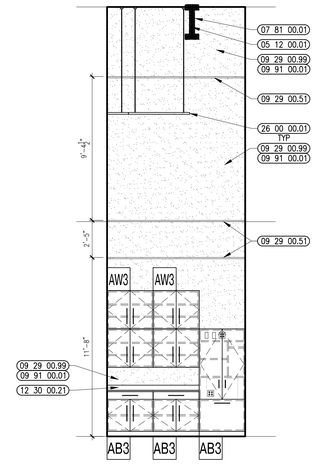

7 GRADE 5/6 ART CLASSROOM INTERIOR ELEVATION
1/4" = 1'-0"

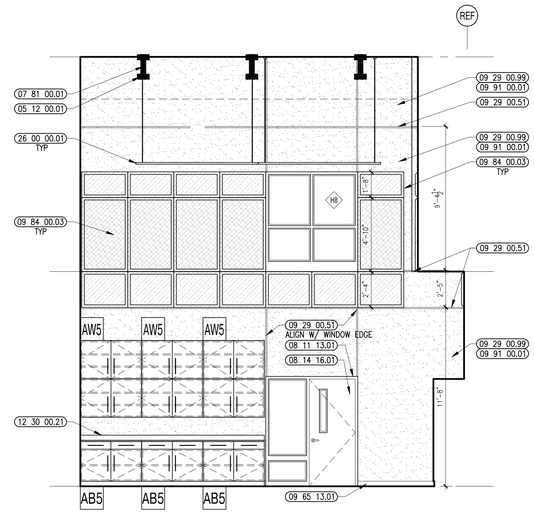

6 GRADE 5/6 ART CLASSROOM INTERIOR ELEVATION
1/4" = 1'-0"

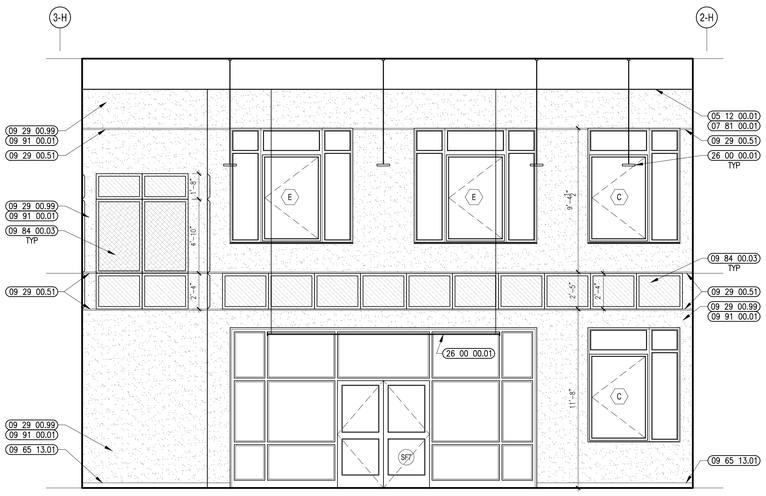

5 GRADE 5/6 ART CLASSROOM INTERIOR ELEVATION
1/4" = 1'-0"

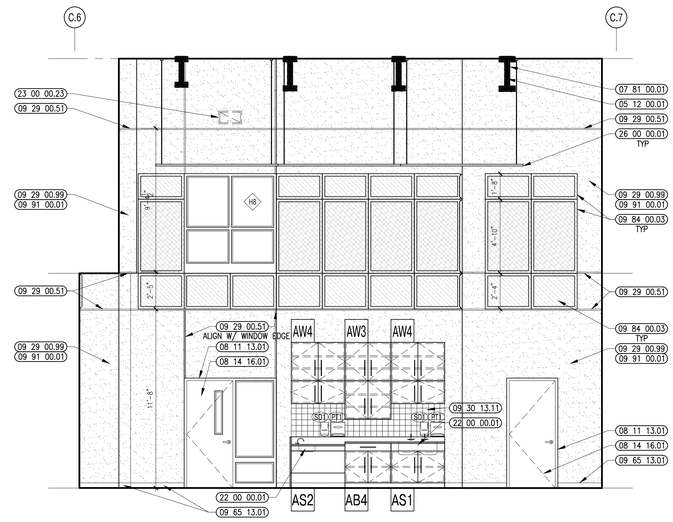

4 GRADE 5/6 ART CLASSROOM INTERIOR ELEVATION
1/4" = 1'-0"

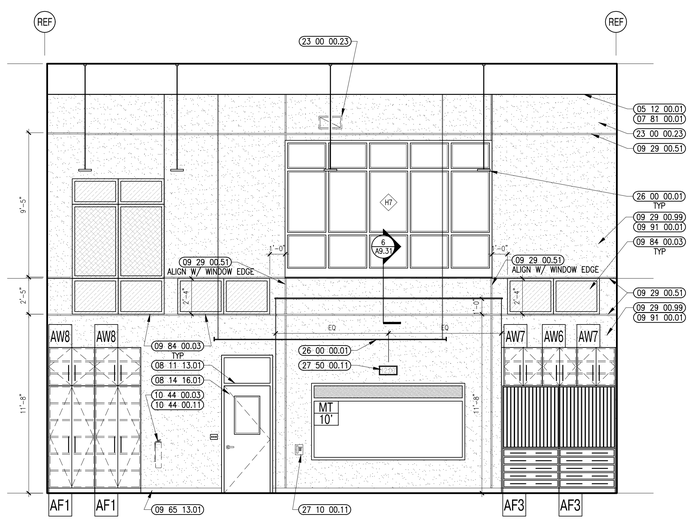

3 GRADE 5/6 ART CLASSROOM INTERIOR ELEVATION
1/4" = 1'-0"

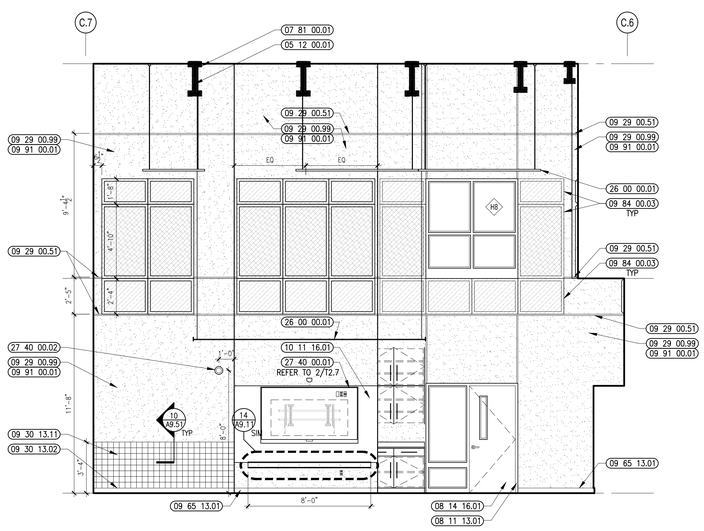

2 GRADE 5/6 ART CLASSROOM INTERIOR ELEVATION
1/4" = 1'-0"

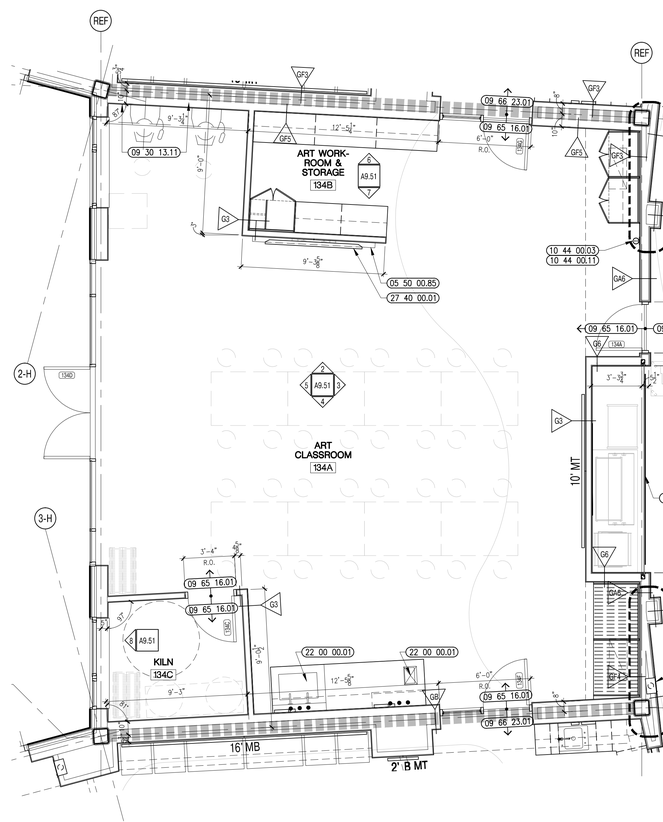

1 GRADE 5/6 ART CLASSROOM ENLARGED PLAN
1/4" = 1'-0"

A13 architects
526 Boston Post Rd Wayland, MA
508.358.0790 www.a13architects.com

BEVERLY MIDDLE SCHOOL

CABOT STREET
BEVERLY, MA 01915

Copyright © 2016 A13 Architects, LLC

KEYNOTE LEGEND: (REFERENCE SHEETS A0.01 & A0.02 FOR MASTER KEYNOTE LIST AND KEYNOTES NOT LISTED)

05 12 00.01	STEEL BEAM – SEE STRUCTURAL
05 12 00.02	STEEL COLUMN – SEE STRUCTURAL
05 50 00.85	ALUMINUM MARKER TROUGH
06 10 00.11	WOOD BLOCKING – 2X PRESSURE TREATED – SIZE AS NOTED OR DRAWN
06 20 00.31	HARDWOOD VENEER PLYWOOD – 1/2 INCH – TRANSPARENT FINISH
06 20 00.53	MDF PLYWOOD – 3/4 INCH
07 21 00.20	GLASS FIBER INSULATION
07 81 00.01	CEMENTITIOUS FIREPROOFING
07 92 00.01	JOINT SEALANT – TYPE AS REQUIRED
07 92 00.02	BACKER ROD AND SEALANT – TYPE AS REQUIRED

GENERAL NOTES:

1. NOT ALL POWER & DATA OUTLET/SWITCHING LOCATIONS SHOWN. CONTRACTOR TO REFER TO ELECTRICAL AND TECHNOLOGY DRAWINGS FOR LOCATIONS.

2. REFER TO DRAWING 2/A7.31 FOR FIRE EXTINGUISHER MOUNTING HEIGHTS.

3. REFER TO THE TOILET ACCESSORY SCHEDULE & LEGEND ON DRAWING A8.31 FOR ADDITIONAL INFORMATION.

4. REFER TO 3/A7.31 FOR 101116.01 EDGE DETAILS, TYP.

ART SINK LEGEND:

GENERAL NOTES:

ITEMS ARE FURNISHED BY 12 30 00 AND INSTALLED BY 22 00 00

Stainless Steel Top Assembly w/ Integral Sink
Provide two (1) at Art Classroom 134A
Provide one (2) at Art Classroom 334A

Stainless Steel Top Assembly 3'-6" x 3'-0" x 1 1/4" thick with one (1) integral stainless steel single bowl sink 30" x 20" x 10" D I.D., with an integral 9" H x 7" D box ledge, with vacuum breakers and one (1) strainer-tailpiece assembly equal to Elkay #LK-35.

Provide top with 1/2" W Marine edge along front and sides.

Handicap Accessible Art Room Sink
Provide one (1) at Art Classroom 134A
Provide one (1) at Art Classroom 334A

One (1) stainless steel bowl sink 22" x 17" overall w/ bowl 16" x 13 1/2" x 160 I.D. (Elkay #DRKAD2217, modified to be 6"D, and drilled to accept faucet specified herein)

One (1) H & CW mixing swing spout faucet w/ single lever control.

One (1) strainer & Tailpiece assembly (Elkay #KK-35)

Provide sediment traps in all sinks

90% CONSTRUCTION DOCUMENTS

NOT FOR CONSTRUCTION

NORTH ARROW

KEYPLAN

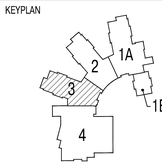

DRAWING NAME:

ART CLASSROOM ENLARGED PLAN & ELEVATIONS

DRAWN BY:	JMR
REVIEWED BY:	BPH
SCALE:	As Noted
JOB NO.:	1403.00
DATE:	July 25, 2016
DRAWING NUMBER:	A9.51

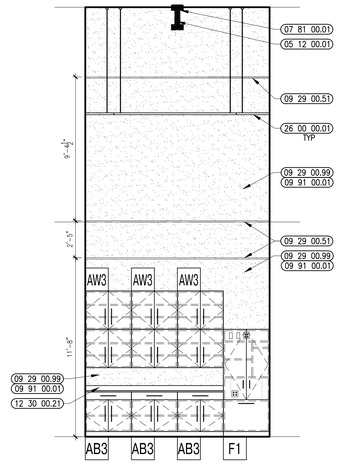

7 GRADE 5/6 ART CLASSROOM INTERIOR ELEVATION
1/4" = 1'-0"

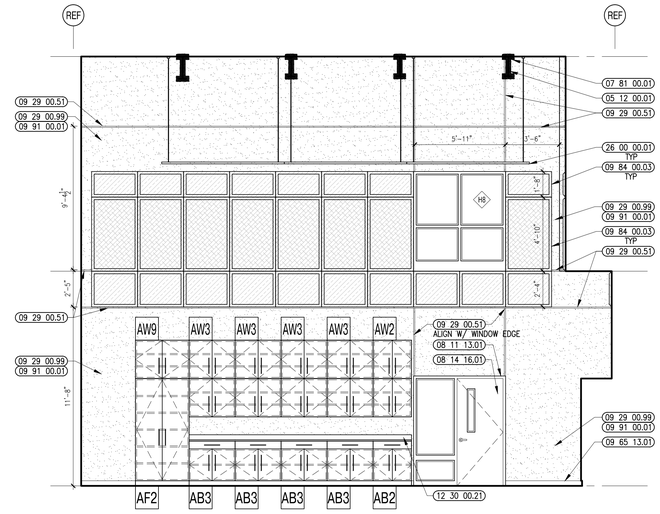

6 GRADE 5/6 ART CLASSROOM INTERIOR ELEVATION
1/4" = 1'-0"

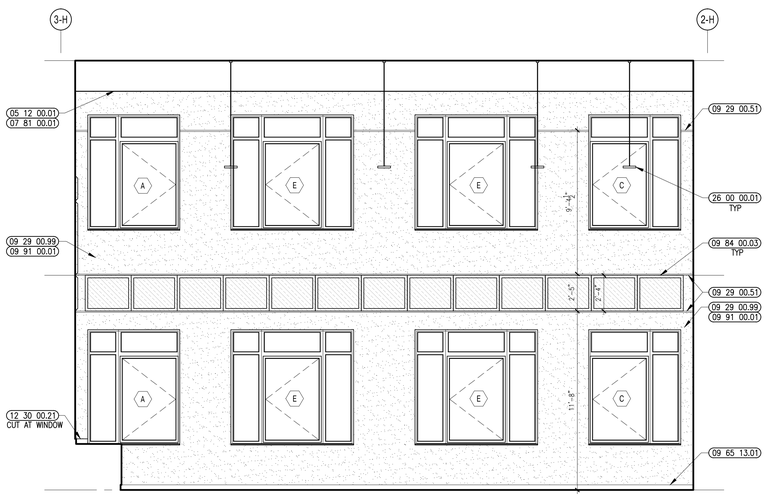

5 GRADE 7/8 ART CLASSROOM INTERIOR ELEVATION
1/4" = 1'-0"

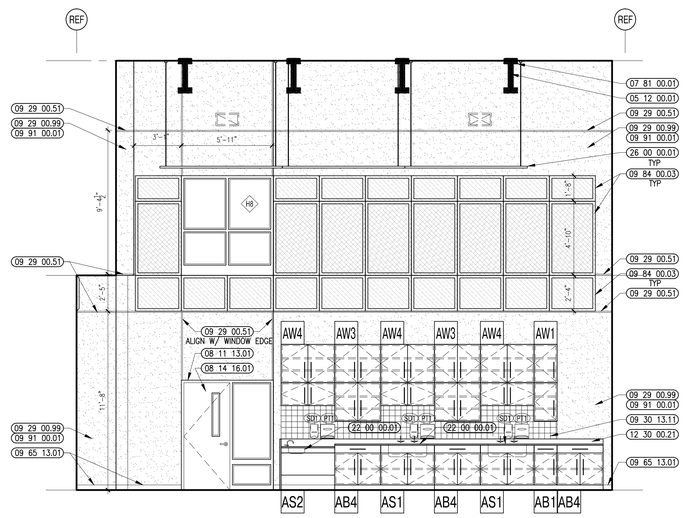

4 GRADE 7/8 ART CLASSROOM INTERIOR ELEVATION
1/4" = 1'-0"

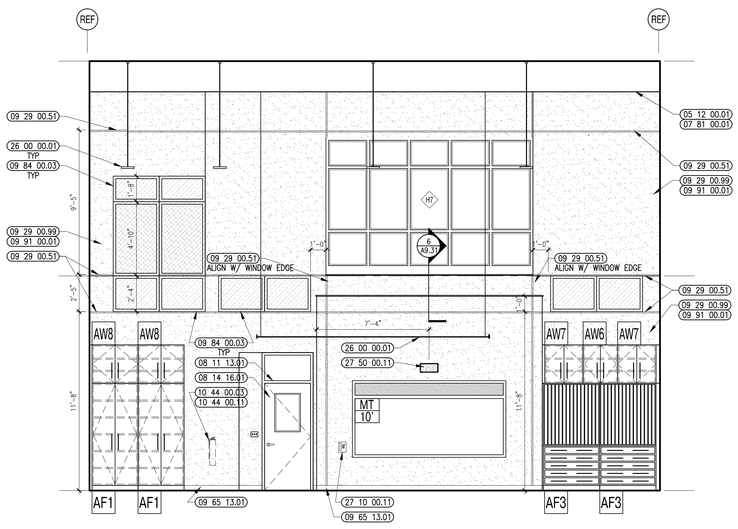

3 GRADE 7/8 ART CLASSROOM INTERIOR ELEVATION
1/4" = 1'-0"

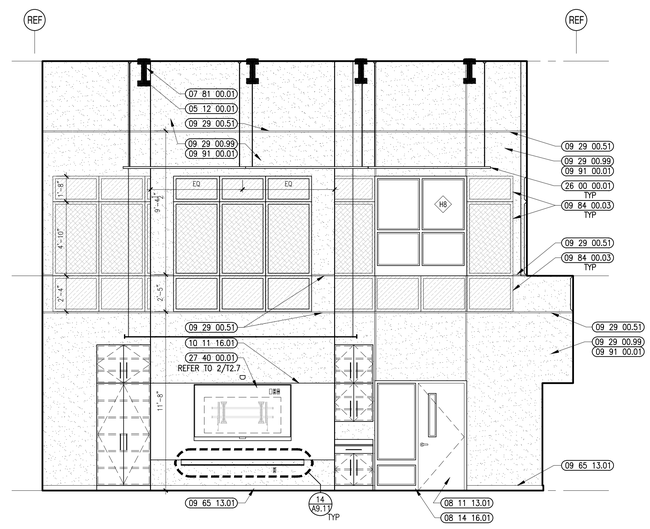

2 GRADE 7/8 ART CLASSROOM INTERIOR ELEVATION
1/4" = 1'-0"

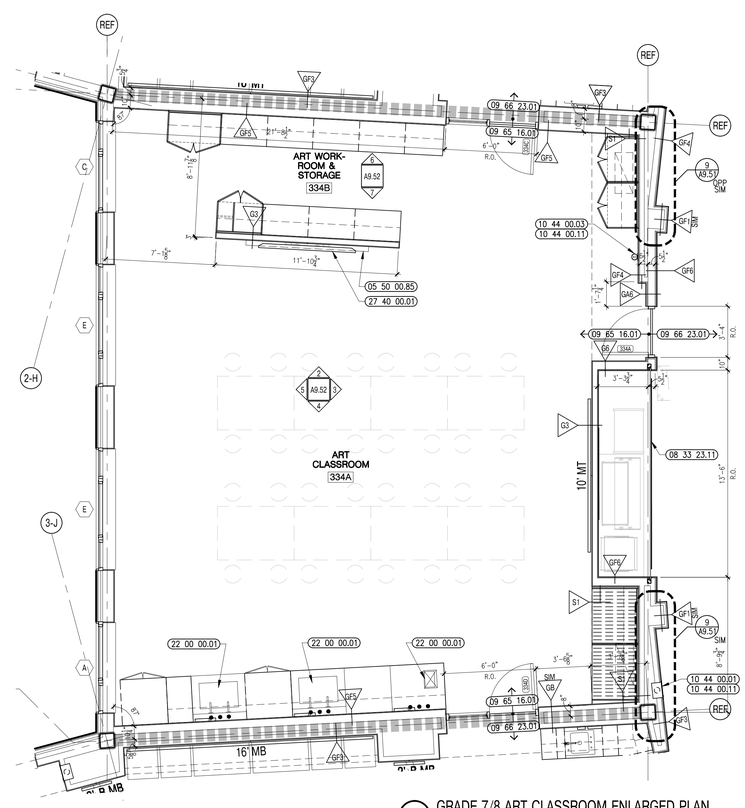

1 GRADE 7/8 ART CLASSROOM ENLARGED PLAN
1/4" = 1'-0"

526 Boston Post Rd Wayland, MA
508.358.0790 www.ai3architects.com

BEVERLY MIDDLE SCHOOL

CABOT STREET
BEVERLY, MA 01915

Copyright © 2016 AI3 Architects, LLC

KEYNOTE LEGEND: (REFERENCE SHEETS A0.01 & A0.02 FOR MASTER KEYNOTE LIST AND KEYNOTES NOT LISTED)

05 12 00.01	STEEL BEAM – SEE STRUCTURAL
05 50 00.85	ALUMINUM MARKER TROUGH
07 81 00.01	CEMENTITIOUS FIREPROOFING
08 11 13.01	DOOR AND FRAME– SEE DOOR SCHEDULE
08 14 16.01	SOLID CORE FLUSH WOOD DOOR– SEE DOOR SCHEDULE
08 33 23.11	TYPE OHC2 – INTERIOR – 13'-6"W x 9'-0"H – POWER OPERATED
09 29 00.51	ALUMINUM REVEAL TRIM – SATIN FINISH – 1 INCH
09 29 00.99	GYPSUM BOARD SYSTEM – LEVEL 4 FINISH – REFER TO FLOOR PLANS AND WALL TYPES FOR COMPONENTS
09 30 13.11	GLAZED CERAMIC WALL TILE

GENERAL NOTES:

1. NOT ALL POWER & DATA OUTLET/SWITCHING LOCATIONS SHOWN. CONTRACTOR TO REFER TO ELECTRICAL AND TECHNOLOGY DRAWINGS FOR LOCATIONS.

2. REFER TO DRAWING 2/A7.31 FOR FIRE EXTINGUISHER MOUNTING HEIGHTS.

3. REFER TO THE TOILET ACCESSORY SCHEDULE & LEGEND ON DRAWING A8.31 FOR ADDITIONAL INFORMATION.

4. REFER TO 3/A7.31 FOR 101116.01 EDGE DETAILS, TYP.

ART SINK LEGEND:

GENERAL NOTES:

ITEMS ARE FURNISHED BY 12 30 00 AND INSTALLED BY 22 00 00

Stainless Steel Top Assembly w/ Integral Sink
Provide two (1) at Art Classroom 134A
Provide one (2) at Art Classroom 334A

Stainless Steel Top Assembly 3'–6" x 3'–0" x 1 1/4" thick with one (1) integral stainless steel single bowl sink 30" x 20" x 10" D I.D., with an integral 9" H x 7" D box ledge, with vacuum breakers and one (1) strainer–tailpiece assembly equal to Elkay #LK–35.

Provide top with 1/2" W Marine edge along front and sides.

Handicap Accessible Art Room Sink
Provide one (1) at Art Classroom 134A
Provide one (1) at Art Classroom 334A

One (1) stainless steel bowl sink 22" x 17" overall w/ bowl 16" x 13 1/2" x 16D I.D. (Elkay #DRKAD2217, modified to be 6"D, and drilled to accept faucet specified herein)

One (1) H & CW mixing swing spout faucet w/ single lever control.

One (1) strainer & Tailpiece assembly (Elkay #KK–35)

Provide sediment traps in all sinks

90% CONSTRUCTION DOCUMENTS

NOT FOR CONSTRUCTION

NORTH ARROW

KEYPLAN

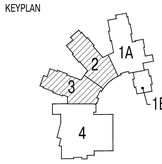

DRAWING NAME:

ART CLASSROOM ENLARGED PLAN & ELEVATIONS

DRAWN BY:	JMR
REVIEWED BY:	BPH
SCALE:	As Noted
JOB NO.:	1403.00
DATE:	July 25, 2016
DRAWING NUMBER:	A9.52

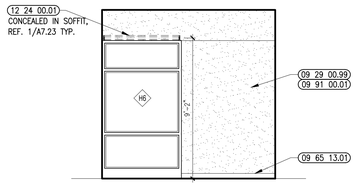

12 ASSISTANT PRINCIPAL ELEVATION
1/4" = 1'-0"

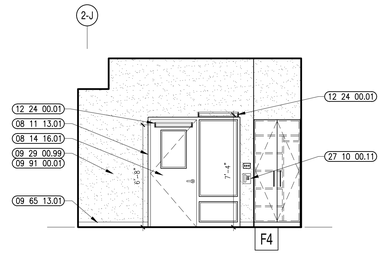

12 ASSISTANT PRINCIPAL ELEVATION
1/4" = 1'-0"

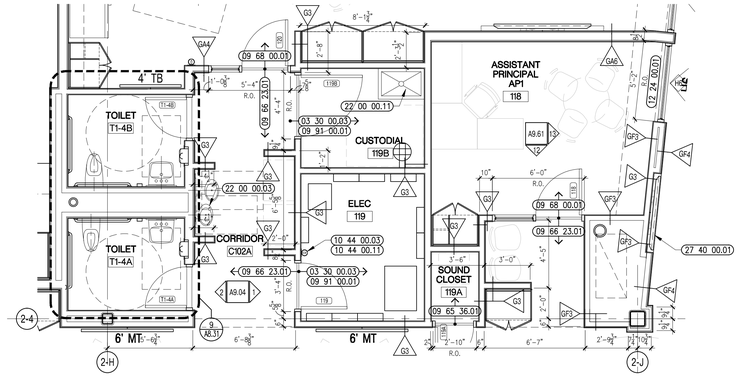

11 TEACHER COLLABORATION ENLARGED PLAN - FLOOR 1
1/4" = 1'-0"

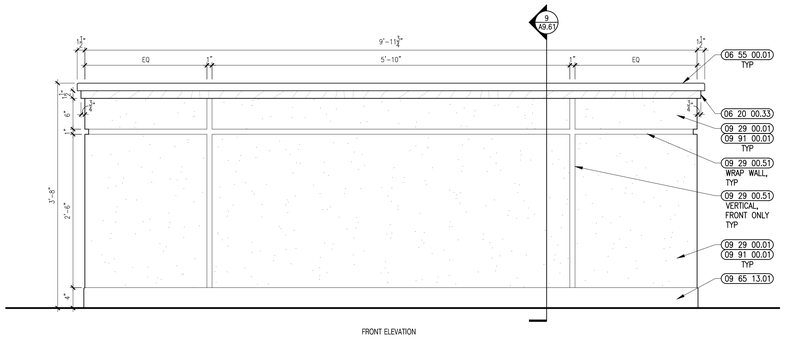

10 LOW WALL @ TEACHER COLLAB. TYP.
1" = 1'-0"

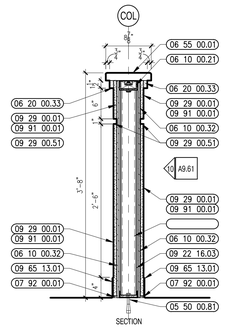

9 LOW WALL @ TEACHER COLLAB. TYP.
1" = 1'-0"

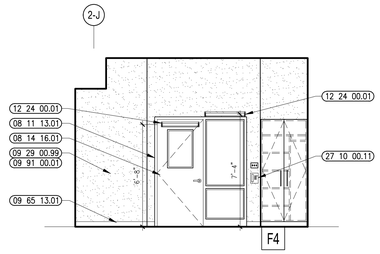

8 ASSISTANT PRINCIPAL ELEVATION
1/4" = 1'-0"

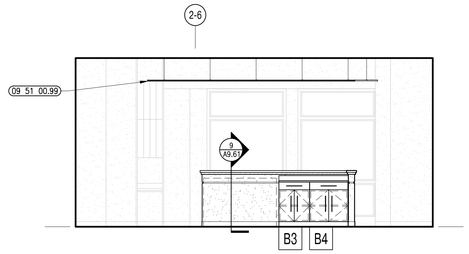

7 TEACHER COLLABORATION ELEVATION
1/4" = 1'-0"

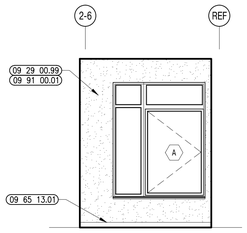

6 TEACHER COLLABORATION ELEVATION
1/4" = 1'-0"

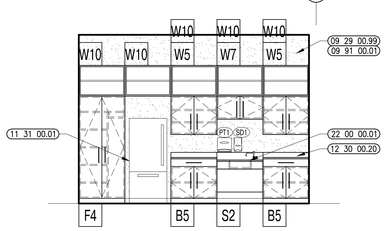

5 TEACHER COLLABORATION ELEVATION
1/4" = 1'-0"

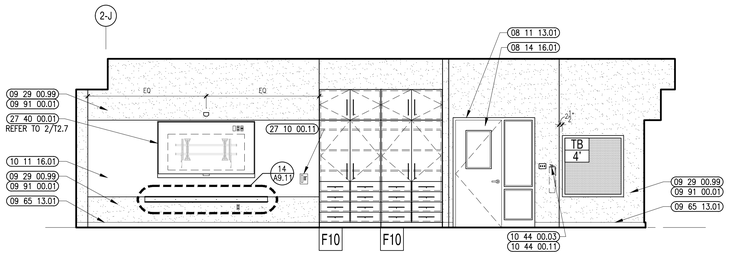

4 TEACHER COLLABORATION ELEVATION
1/4" = 1'-0"

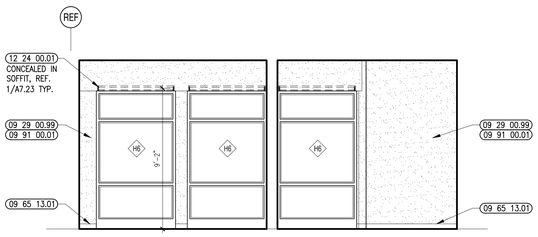

3 TEACHER COLLABORATION ELEVATION
1/4" = 1'-0"

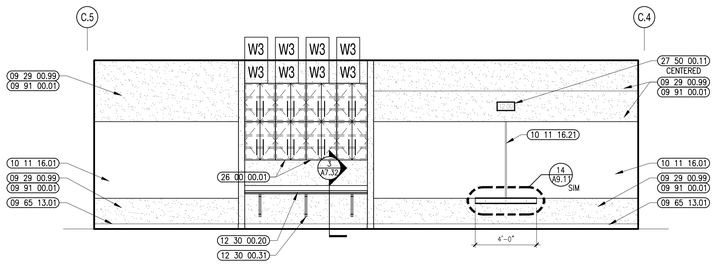

2 TEACHER COLLABORATION ELEVATION
1/4" = 1'-0"

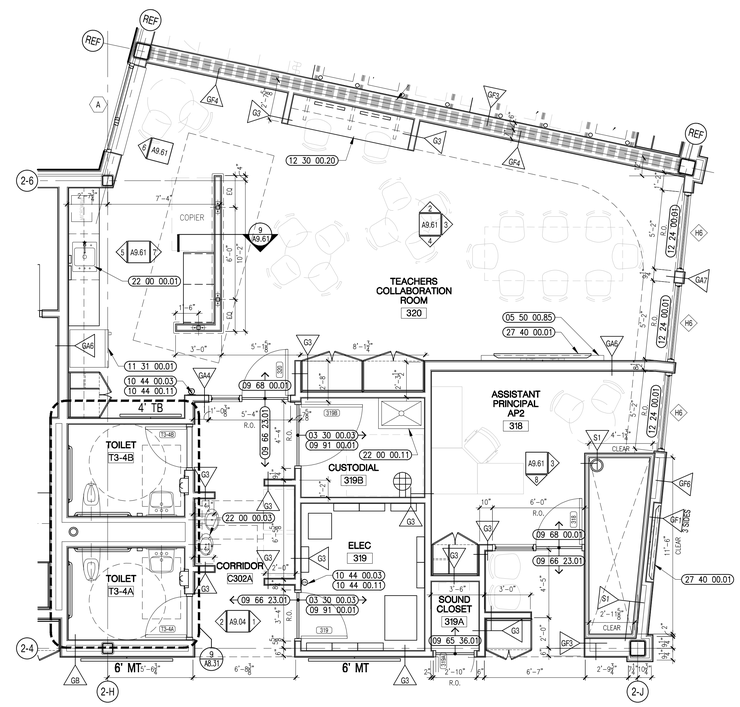

1 TEACHER COLLABORATION ENLARGED PLAN
1/4" = 1'-0"
TYP

architects
526 Boston Post Rd Wayland, MA
508.358.0790 www.ai3architects.com

BEVERLY MIDDLE SCHOOL

CABOT STREET
BEVERLY, MA 01915

Copyright © 2016 A13 Architects, LLC

KEYNOTE LEGEND: (REFERENCE SHEETS A0.01 & A0.02 FOR MASTER KEYNOTE LIST AND KEYNOTES NOT LISTED)

03 30 00.03	CONCRETE SLAB ON DECK – SEE STRUCTURAL
05 50 00.81	ANCHOR BOLT
05 50 00.85	ALUMINUM MARKER TROUGH
06 10 00.21	WOOD BLOCKING – 2X FIRE RETARDANT TREATED – SIZE AS NOTED OR DRAWN
06 10 00.32	PLYWOOD – 1/2 INCH
06 20 00.33	HARDWOOD VENEER PLYWOOD – 3/4 INCH – TRANSPARENT FINISH
06 55 00.01	SOLID SURFACE MATERIAL
07 92 00.01	JOINT SEALANT – TYPE AS REQUIRED
08 11 13.01	DOOR AND FRAME– SEE DOOR SCHEDULE
08 14 16.01	SOLID CORE FLUSH WOOD DOOR– SEE DOOR SCHEDULE
09 22 16.03	METAL STUD 3–5/8 INCH – 16 INCHES O.C. MAX
09 29 00.01	5/8 INCH GYPSUM BOARD – LEVEL 4 FINISH
09 29 00.51	ALUMINUM REVEAL TRIM – SATIN FINISH – 1 INCH
09 29 00.99	GYPSUM BOARD SYSTEM – LEVEL 4 FINISH – REFER TO FLOOR PLANS AND WALL TYPES FOR COMPONENTS
09 51 00.99	ACOUSTICAL CEILING – REFERENCE REFLECTED CEILING PLANS FOR TYPE AND HEIGHT
09 65 13.01	RUBBER BASE – 4"
09 65 36.01	STATIC–CONTROL COMPOSITE TILE
09 66 23.01	RESINOUS MATRIX TERRAZZO FLOORING
09 68 00.01	CARPET
09 91 00.01	PAINT – SEE SCHEDULE
10 11 16.01	DRY MARKER BOARD
10 11 16.21	DRY ERASE H–BAR SPLICE
10 44 00.03	FIRE EXTINGUISHER WALL MOUNTED BRACKET
10 44 00.11	FIRE EXTINGUISHER
11 31 00.01	REFRIGERATOR
12 24 00.01	ROLLER SHADE
12 30 00.20	PLASTIC LAMINATE COUNTERTOP
12 30 00.31	STEEL UNDER COUNTER SUPPORT BRACKET – SIZE AS NOTED OR DRAWN
22 00 00.01	SINK – SEE PLUMBING
22 00 00.03	WATER FOUNTAIN – SEE PLUMBING
22 00 00.11	MOP SINK – SEE PLUMBING
26 00 00.01	LIGHT FIXTURE – SEE ELECTRICAL
27 10 00.11	TELEPHONE JACK – SEE TECHNOLOGY – TELEPHONE DEVICE TO BE OWNER FURNISHED AND INSTALLED
27 40 00.01	LCD TV – SEE TECHNOLOGY
27 50 00.11	CLOCK – SEE TECHNOLOGY

GENERAL NOTES:

1. NOT ALL POWER & DATA OUTLET/SWITCHING LOCATIONS SHOWN. CONTRACTOR TO REFER TO ELECTRICAL AND TECHNOLOGY DRAWINGS FOR LOCATIONS.
2. REFER TO DRAWING 2/A7.31 FOR FIRE EXTINGUISHER MOUNTING HEIGHTS.
3. REFER TO THE TOILET ACCESSORY SCHEDULE & LEGEND ON DRAWING A8.31 FOR ADDITIONAL INFORMATION.
4. REFER TO 3/A7.31 FOR 101116.01 EDGE DETAILS, TYP.

90% CONSTRUCTION DOCUMENTS

NOT FOR CONSTRUCTION

NORTH ARROW

KEYPLAN

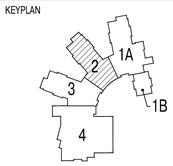

DRAWING NAME:

TEACHERS COLLABORATION ENLARGED PLANS & ELEVATIONS

DRAWN BY:	JMR
REVIEWED BY:	BPH
SCALE:	As Noted
JOB NO.:	1403.00
DATE:	July 25, 2016
DRAWING NUMBER:	A9.61

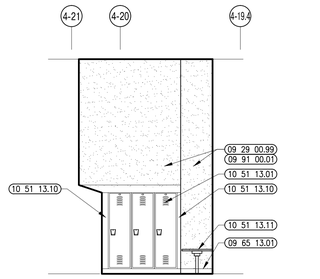

15 LOCKERS INTERIOR ELEVATION
1/4" = 1'-0"

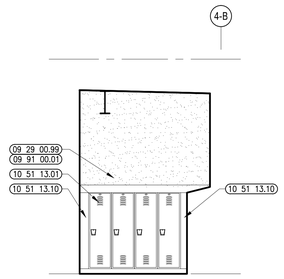

14 LOCKERS INTERIOR ELEVATION
1/4" = 1'-0"

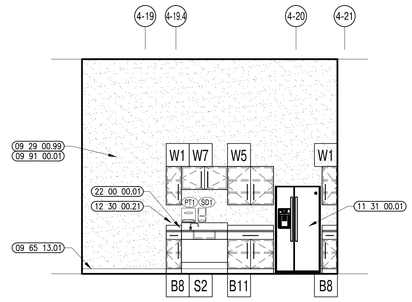

13 CUSTODIAN BREAK INTERIOR ELEVATION
1/4" = 1'-0"

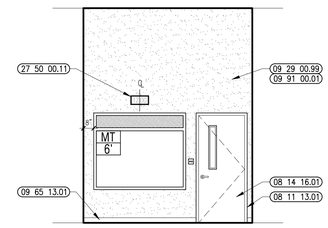

12 CUSTODIAN BREAK INTERIOR ELEVATION
1/4" = 1'-0"

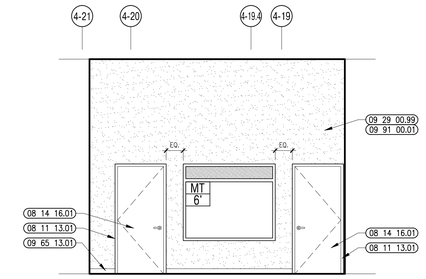

11 CUSTODIAN BREAK INTERIOR ELEVATION
1/4" = 1'-0"

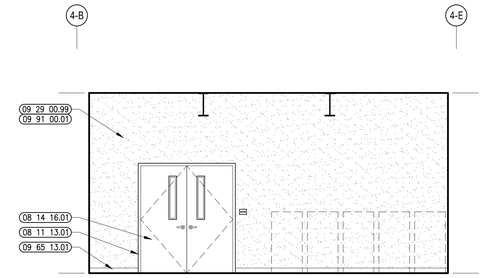

16 CUSTODIAN'S OFFICE INTERIOR ELEVATION
1/4" = 1'-0"

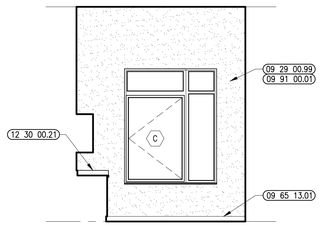

10 CUSTODIAN BREAK INTERIOR ELEVATION
1/4" = 1'-0"

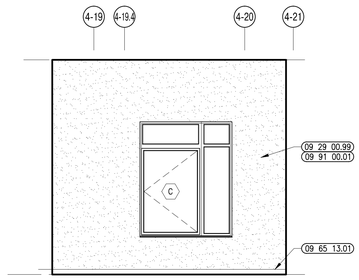

9 CUSTODIAN'S OFFICE INTERIOR ELEVATION
1/4" = 1'-0"

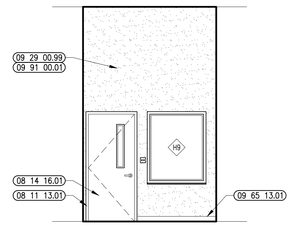

8 CUSTODIAN'S OFFICE INTERIOR ELEVATION
1/4" = 1'-0"

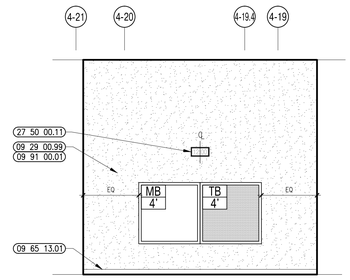

7 CUSTODIAN'S OFFICE INTERIOR ELEVATION
1/4" = 1'-0"

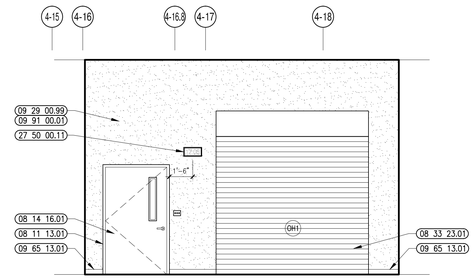

6 RECEIVING SUPPLY INTERIOR ELEVATION
1/4" = 1'-0"

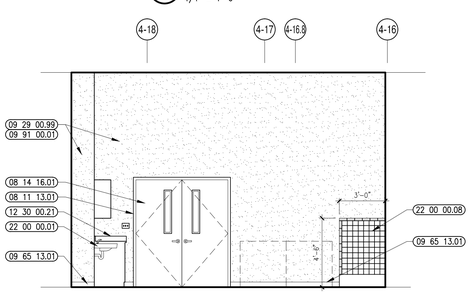

5 RECEIVING SUPPLY INTERIOR ELEVATION
1/4" = 1'-0"

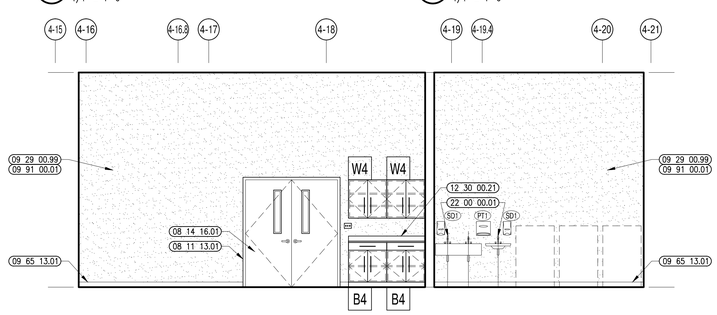

4 STOREROOM INTERIOR ELEVATION
1/4" = 1'-0"

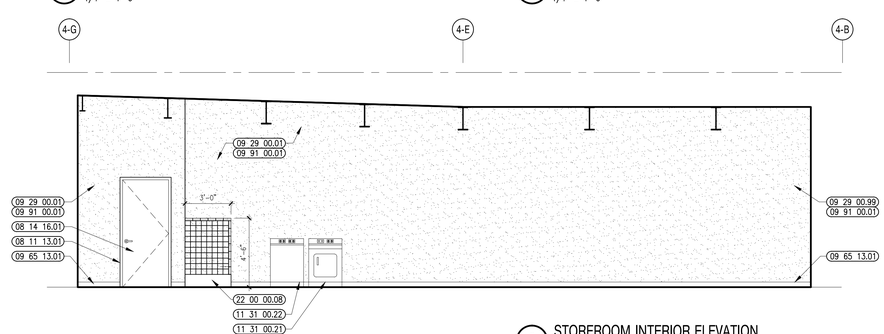

3 STOREROOM INTERIOR ELEVATION
1/4" = 1'-0"

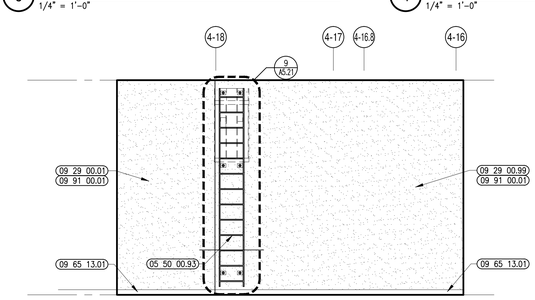

2 STOREROOM INTERIOR ELEVATION
1/4" = 1'-0"

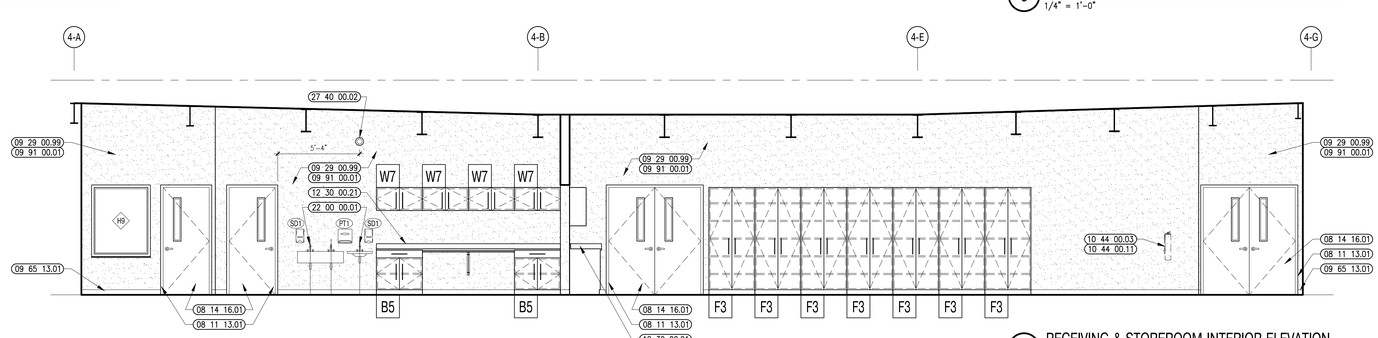

1 RECEIVING & STOREROOM INTERIOR ELEVATION
1/4" = 1'-0"

A13 architects
526 Boston Post Rd Wayland, MA
508.358.0790 www.a13architects.com

BEVERLY MIDDLE SCHOOL

CABOT STREET
BEVERLY, MA 01915

Copyright © 2016 A13 Architects, LLC

KEYNOTE LEGEND: (REFERENCE SHEETS A0.01 & A0.02 FOR MASTER KEYNOTE LIST AND KEYNOTES NOT LISTED)

05 50 00.93	ROOF ACCESS LADDER – INTERIOR
08 11 13.01	DOOR AND FRAME– SEE DOOR SCHEDULE
08 14 16.01	SOLID CORE FLUSH WOOD DOOR– SEE DOOR SCHEDULE
08 33 23.01	TYPE OHC1 – EXTERIOR – 10'-0"W x 9'-0"H – POWER OPERATED
09 29 00.01	5/8 INCH GYPSUM BOARD – LEVEL 4 FINISH
09 29 00.99	GYPSUM BOARD SYSTEM – LEVEL 4 FINISH – REFER TO FLOOR PLANS AND WALL TYPES FOR COMPONENTS
09 65 13.01	RUBBER BASE – 4"
09 91 00.01	PAINT – SEE SCHEDULE
10 44 00.03	FIRE EXTINGUISHER WALL MOUNTED BRACKET
10 44 00.11	FIRE EXTINGUISHER
10 51 13.11	METAL LOCKER – SLOPED TOP – TYPE 1
10 51 13.10	METAL FILLER PANEL – EACH SIDE OF LOCKER BANK TO CENTER LOCKERS IN OPENING
10 51 13.11	LOCKER ROOM BENCH
11 31 00.01	REFRIGERATOR
11 31 00.21	WASHER
11 31 00.22	DRYER
12 30 00.21	PLASTIC LAMINATE BACKSPLASH – 4 INCH
22 00 00.01	SINK – SEE PLUMBING
22 00 00.08	MOP RECEPTOR – SEE PLUMBING
27 40 00.02	CAMERA – SEE TECHNOLOGY
27 50 00.11	CLOCK – SEE TECHNOLOGY

90% CONSTRUCTION DOCUMENTS

NOT FOR CONSTRUCTION

NORTH ARROW

KEYPLAN

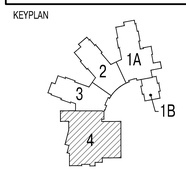

DRAWING NAME:

CUSTODIAL SUITE INTERIOR ELEVATIONS

DRAWN BY:	JMR / ETF
REVIEWED BY:	BPH
SCALE:	As Noted
JOB NO.:	1403.00
DATE:	July 25, 2016
DRAWING NUMBER:	A9.62

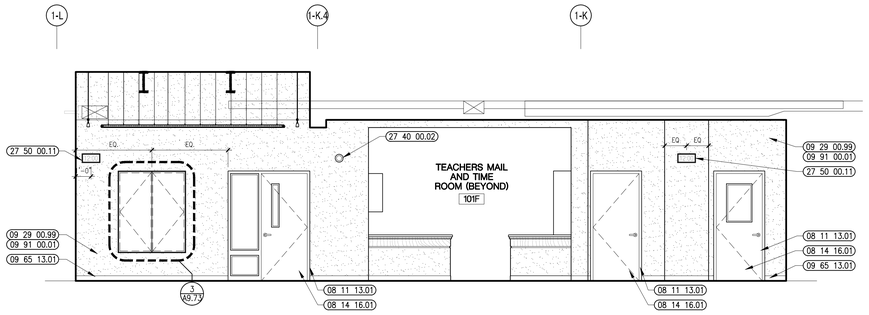

14 ADMINISTRATION SUITE ELEVATION
1/4" = 1'-0"

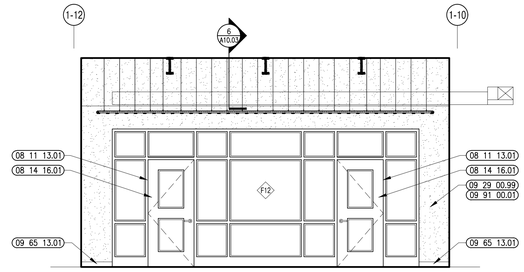

13 ADMINISTRATION SUITE ELEVATION
1/4" = 1'-0"

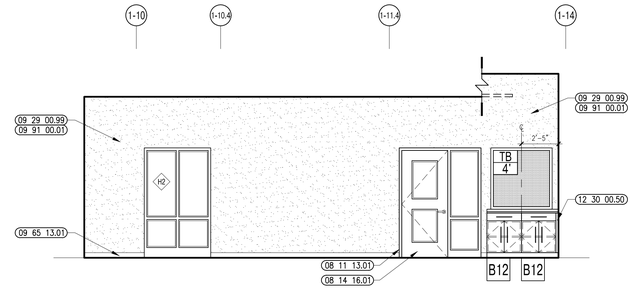

12 ADMINISTRATION SUITE ELEVATION
1/4" = 1'-0"

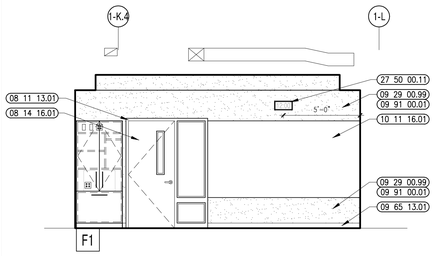

11 CONFERENCE ROOM ELEVATION
1/4" = 1'-0"

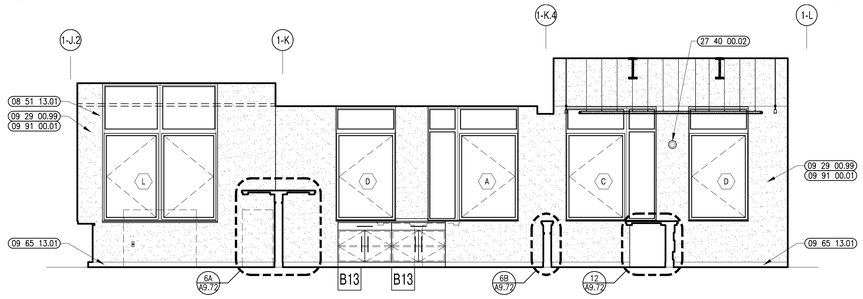

10 ADMINISTRATION SUITE ELEVATION
1/4" = 1'-0"

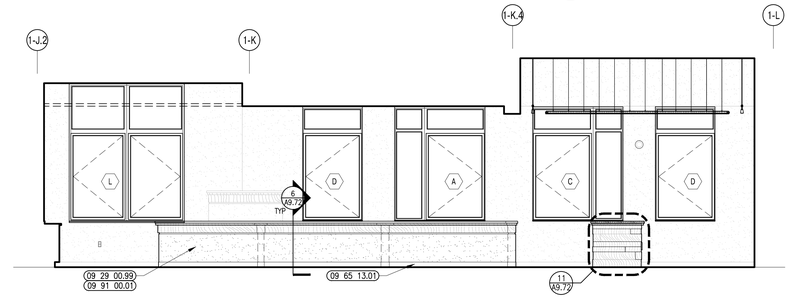

9 ADMINISTRATION SUITE ELEVATION
1/4" = 1'-0"

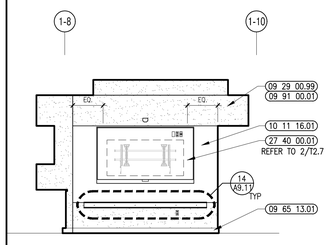

8 CONFERENCE ROOM ELEVATION
1/4" = 1'-0"

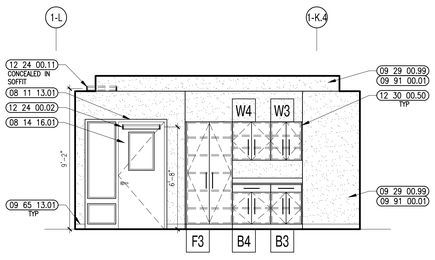

7 CONFERENCE ROOM ELEVATION
1/4" = 1'-0"

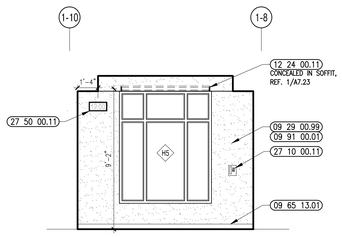

6 CONFERENCE ROOM ELEVATION
1/4" = 1'-0"

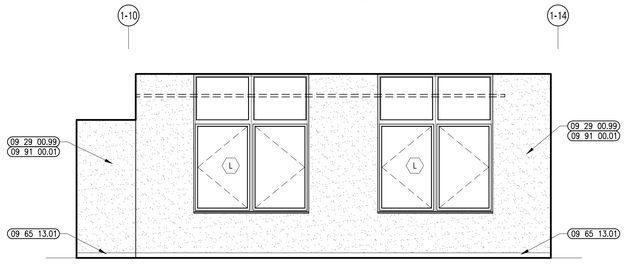

5 PRINCIPAL'S OFFICE ELEVATION
1/4" = 1'-0"

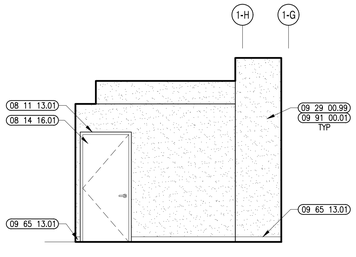

4 PRINCIPAL'S OFFICE ELEVATION
1/4" = 1'-0"

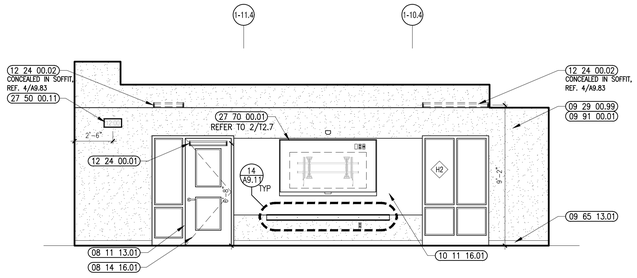

3 PRINCIPAL'S OFFICE ELEVATION
1/4" = 1'-0"

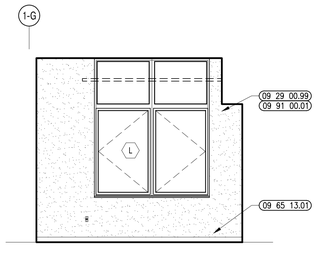

2 PRINCIPAL'S OFFICE ELEVATION
1/4" = 1'-0"

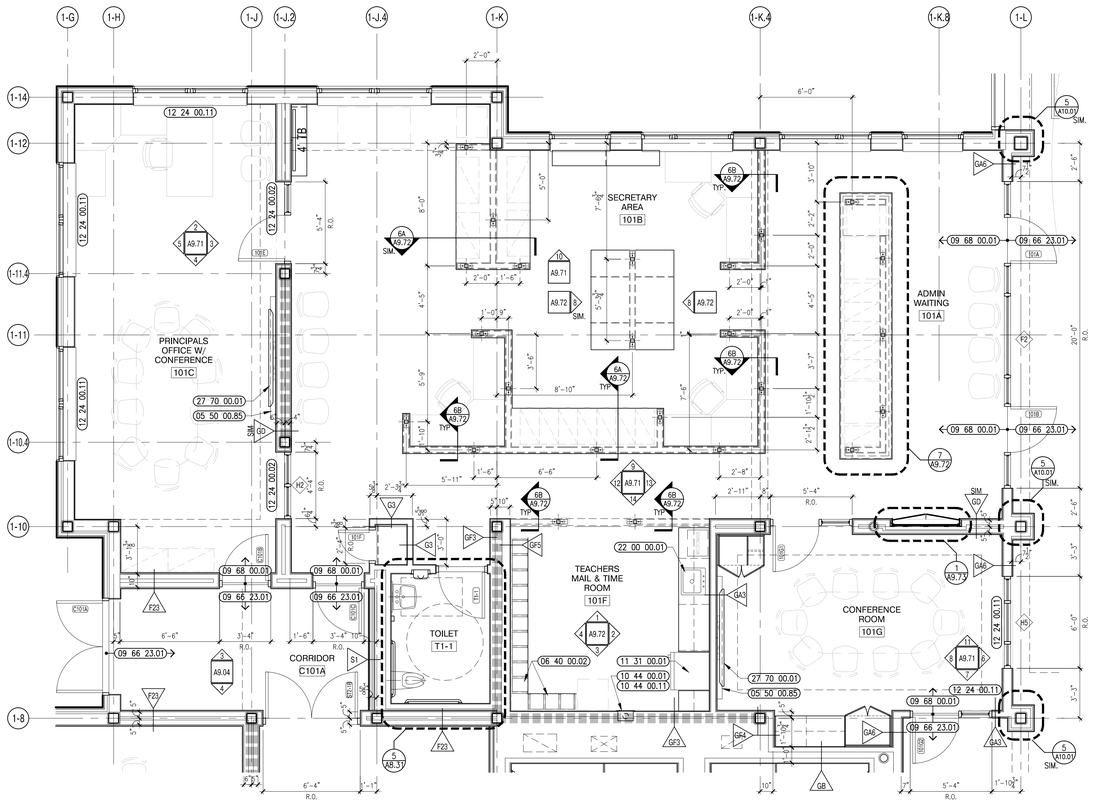

1 ADMINISTRATION SUITE ENLARGED PLAN
1/4" = 1'-0"

architects
526 Boston Post Rd Wayland, MA
508.358.0790 www.ai3architects.com

BEVERLY MIDDLE SCHOOL

CABOT STREET
BEVERLY, MA 01915

Copyright © 2016 - AI3 Architects, LLC

KEYNOTE LEGEND: (REFERENCE SHEETS A0.01 & A0.02 FOR MASTER KEYNOTE LIST AND KEYNOTES NOT LISTED)

05 50 00.85	ALUMINUM MARKER TROUGH
06 40 00.02	MAILBOX UNITS
08 11 13.01	DOOR AND FRAME– SEE DOOR SCHEDULE
08 14 16.01	SOLID CORE FLUSH WOOD DOOR– SEE DOOR SCHEDULE
08 51 13.01	ALUMINUM WINDOW – SEE SCHEDULE
09 29 00.99	GYPSUM BOARD SYSTEM – LEVEL 4 FINISH – REFER TO FLOOR PLANS AND WALL TYPES FOR COMPONENTS
09 65 13.01	RUBBER BASE – 4"
09 66 23.01	RESINOUS MATRIX TERRAZZO FLOORING
09 68 00.01	CARPET
09 91 00.01	PAINT – SEE SCHEDULE
10 11 16.01	DRY MARKER BOARD
10 44 00.01	FIRE EXTINGUISHER CABINET – FULLY RECESSED
10 44 00.11	FIRE EXTINGUISHER
11 31 00.01	REFRIGERATOR
12 24 00.01	ROLLER SHADE
12 24 00.02	ROLLER SHADE – ELECTRICALLY OPERATED
12 24 00.11	BLACKOUT SHADE
12 30 00.50	FILLER PIECE SCRIBED TO ADJACENT SURFACE – FINISH TO MATCH CASEWORK
22 00 00.01	SINK – SEE PLUMBING
27 10 00.11	TELEPHONE JACK – SEE TECHNOLOGY – TELEPHONE DEVICE TO BE OWNER FURNISHED AND INSTALLED
27 40 00.01	LCD TV – SEE TECHNOLOGY
27 40 00.02	CAMERA – SEE TECHNOLOGY
27 50 00.11	CLOCK – SEE TECHNOLOGY
27 70 00.01	TV – FLAT SCREEN – SEE TECHNOLOGY

GENERAL NOTES:

1. NOT ALL POWER & DATA OUTLET/SWITCHING LOCATIONS SHOWN. CONTRACTOR TO REFER TO ELECTRICAL AND TECHNOLOGY DRAWINGS FOR LOCATIONS.
2. REFER TO DRAWING 2/A7.31 FOR FIRE EXTINGUISHER MOUNTING HEIGHTS.
3. REFER TO THE TOILET ACCESSORY SCHEDULE & LEGEND ON DRAWING A8.31 FOR ADDITIONAL INFORMATION.

90% CONSTRUCTION DOCUMENTS

NOT FOR CONSTRUCTION

NORTH ARROW

KEYPLAN

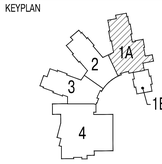

DRAWING NAME:

ADMIN. SUITE ENLARGED PLANS & ELEVATIONS

DRAWN BY:	MJR
REVIEWED BY:	BPH
SCALE:	As Noted
JOB NO.:	1403.00
DATE:	July 25, 2016
DRAWING NUMBER:	A9.71

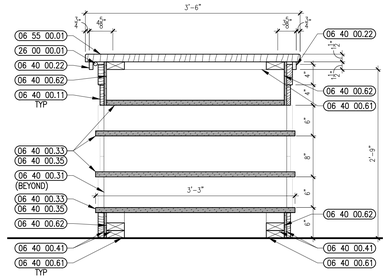

15 ADMIN. COUNTER SECTION
1" = 1'-0"

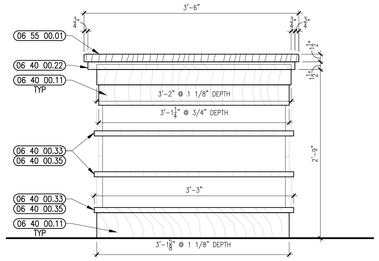

14 ADMIN. COUNTER ELEVATION
1" = 1'-0"

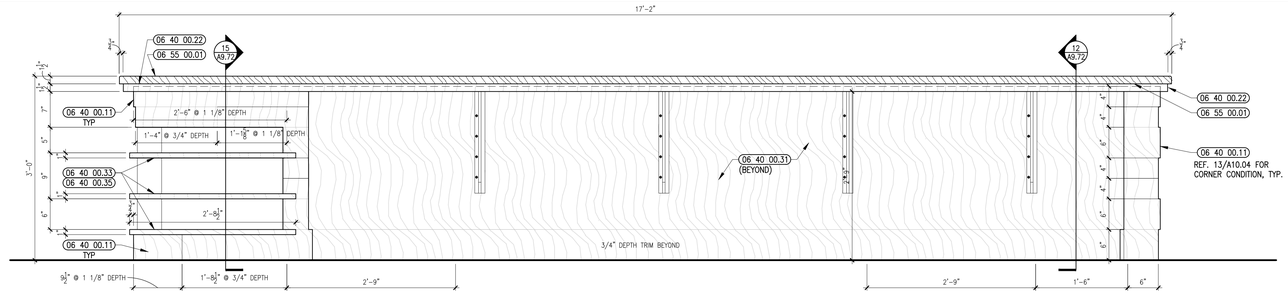

13 ADMIN. COUNTER ELEVATION
1" = 1'-0"

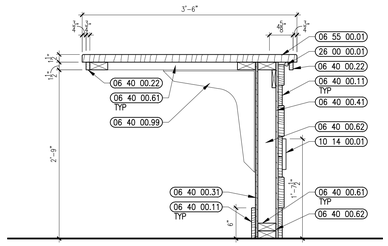

12 ADMIN. COUNTER SECTION
1" = 1'-0"

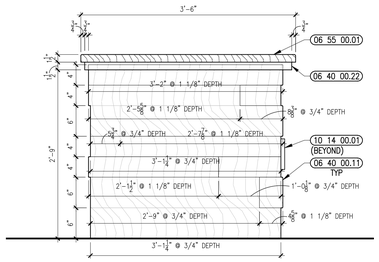

11 ADMIN. COUNTER ELEVATION
1" = 1'-0"

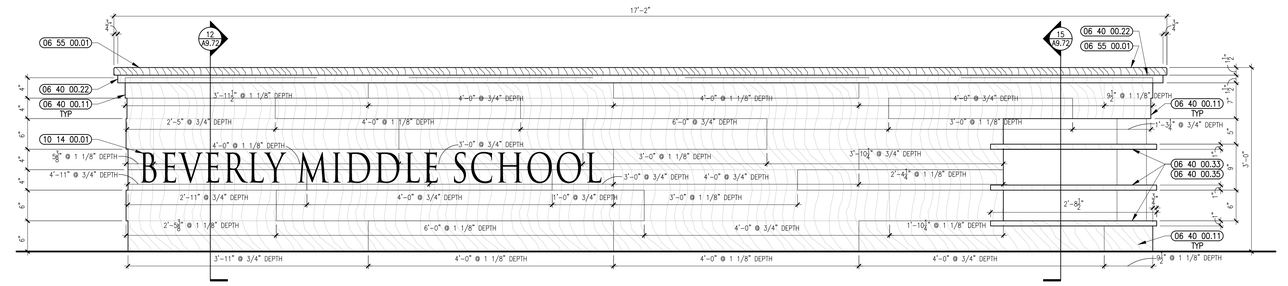

BEVERLY MIDDLE SCHOOL

10 ADMIN. COUNTER ELEVATION
1" = 1'-0"

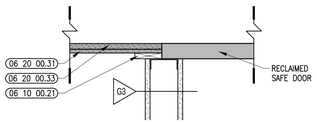

9 ADMIN SUITE ISLAND
1-1/2" = 1'-0"

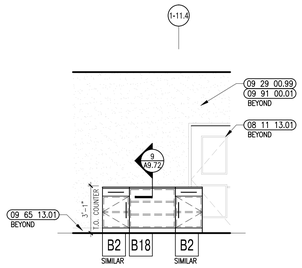

8 ADMIN SUITE ISLAND
1/4" = 1'-0"

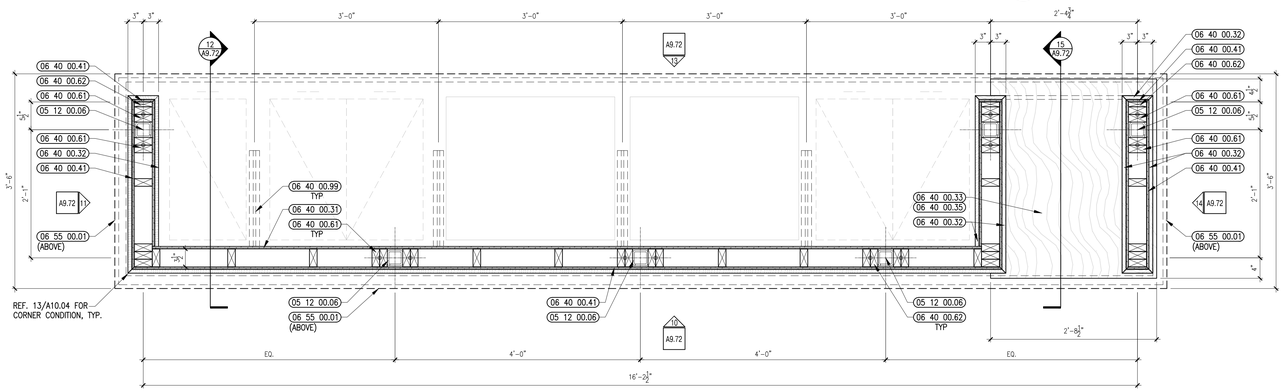

7 ADMIN. COUNTER ENLARGED PLAN
1" = 1'-0"

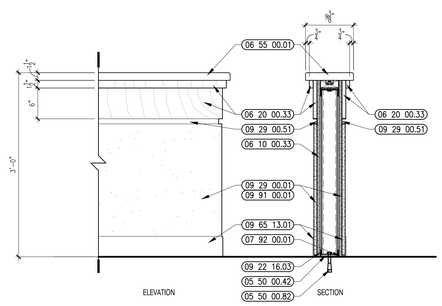

6B TYP. LOW WALL
1" = 1'-0"

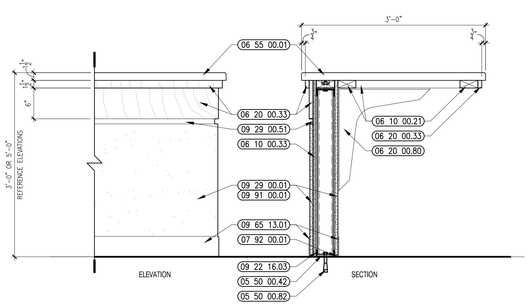

6A TYP. LOW WALL @ COUNTER
1" = 1'-0"

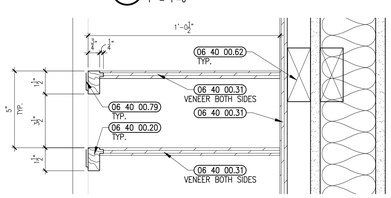

5B ENLARGED SECTION @ MAILBOX SHELVES
3" = 1'-0"

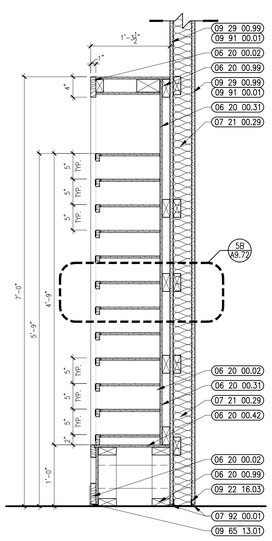

5A SECTION AT MAILBOXES
1" = 1'-0"

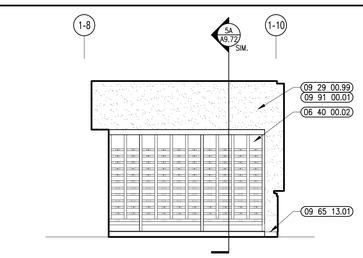

4 TEACHERS MAIL & TIME ROOM ELEV
1/4" = 1'-0"

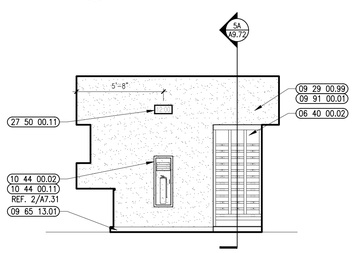

3 TEACHERS MAIL & TIME ROOM ELEV
1/4" = 1'-0"

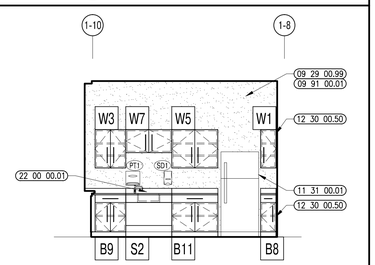

2 TEACHERS MAIL & TIME ROOM ELEV
1/4" = 1'-0"

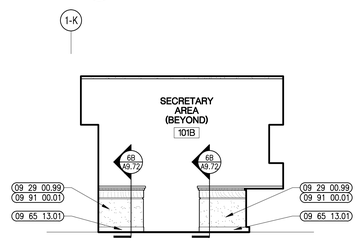

1 TEACHERS MAIL & TIME ROOM ELEV
1/4" = 1'-0"

A13 architects
526 Boston Post Rd Wayland, MA
508.358.0790 www.a13architects.com

BEVERLY MIDDLE SCHOOL

CABOT STREET
BEVERLY, MA 01915

Copyright © 2016 A13 Architects, LLC

KEYNOTE LEGEND: (REFERENCE SHEETS A0.01 & A0.02 FOR MASTER KEYNOTE LIST AND KEYNOTES NOT LISTED)

05 12 00.06	STEEL TUBE – SEE STRUCTURAL
05 50 00.42	STEEL PLATE – 5/16 INCH THICK
05 50 00.82	EXPANSION BOLT
06 10 00.21	WOOD BLOCKING – 2X FIRE RETARDANT TREATED – SIZE AS NOTED OR DRAWN
06 10 00.33	PLYWOOD – 5/8 INCH
06 20 00.02	HARDWOOD TRIM – TRANSPARENT FINISH
06 20 00.31	HARDWOOD VENEER PLYWOOD – 1/2 INCH – TRANSPARENT FINISH
06 20 00.33	HARDWOOD VENEER PLYWOOD – 3/4 INCH – TRANSPARENT FINISH
06 20 00.42	PLYWOOD – 1/2 INCH
06 20 00.80	STEEL UNDER COUNTER SUPPORT BRACKET – SIZE AS NOTED OR DRAWN
06 20 00.99	WOOD BLOCKING – SIZE AS REQUIRED
06 40 00.02	MAILBOX UNITS
06 40 00.11	3D WOOD WALL PANELS – MAPLE
06 40 00.20	HARDWOOD TRIM – TRANSPARENT FINISH – SIZE AS DRAWN
06 40 00.21	HARDWOOD TRIM – 1/2 INCH – TRANSPARENT FINISH
06 40 00.22	HARDWOOD TRIM – 3/4 INCH – TRANSPARENT FINISH
06 40 00.31	HARDWOOD VENEER PLYWOOD – 1/2 INCH – TRANSPARENT FINISH
06 40 00.32	HARDWOOD VENEER PLYWOOD – 3/4 INCH – TRANSPARENT FINISH
06 40 00.33	HARDWOOD VENEER PLYWOOD – 1 INCH – TRANSPARENT FINISH
06 40 00.35	HARDWOOD EDGING ON PLYWOOD – TRANSPARENT FINISH
06 40 00.41	PLYWOOD – 1/2 INCH
06 40 00.61	WOOD BLOCKING – 2X
06 40 00.62	WOOD BLOCKING – SIZE AS REQUIRED
06 40 00.79	CARD HOLDER – RECTANGULAR – 1-1/8" x 3-1/8"
06 40 00.99	UNDER COUNTER STEEL SUPPORT WITH PRE-DRILLED HOLES
06 55 00.01	SOLID SURFACE MATERIAL
07 21 00.29	GLASS FIBER ACOUSTICAL BLANKET INSULATION – MATCH DEPTH OF STUD – UNFACED
07 92 00.01	JOINT SEALANT – TYPE AS REQUIRED
08 11 13.01	DOOR AND FRAME– SEE DOOR SCHEDULE
09 22 16.03	METAL STUD 3-5/8 INCH – 16 INCHES O.C. MAX
09 29 00.01	5/8 INCH GYPSUM BOARD – LEVEL 4 FINISH
09 29 00.51	ALUMINUM REVEAL TRIM – SATIN FINISH – 1 INCH
09 29 00.99	GYPSUM BOARD SYSTEM – LEVEL 4 FINISH – REFER TO FLOOR PLANS AND WALL TYPES FOR COMPONENTS
09 65 13.01	RUBBER BASE – 4"
09 91 00.01	PAINT – SEE SCHEDULE
10 14 00.01	INTERIOR SIGNAGE – TYPE AS SCHEDULED
10 44 00.02	FIRE EXTINGUISHER AND BLANKET CABINET – FULLY RECESSED
10 44 00.11	FIRE EXTINGUISHER
11 31 00.01	REFRIGERATOR
12 30 00.50	FILLER PIECE SCRIBED TO ADJACENT SURFACE – FINISH TO MATCH CASEWORK
22 00 00.01	SINK – SEE PLUMBING
26 00 00.01	LIGHT FIXTURE – SEE ELECTRICAL
27 50 00.11	CLOCK – SEE TECHNOLOGY

90% CONSTRUCTION DOCUMENTS

NOT FOR CONSTRUCTION

NORTH ARROW

KEYPLAN

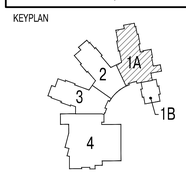

DRAWING NAME:

ADMIN. SUITE ELEVATIONS AND DETAILS

DRAWN BY:	MJR/ JMR
REVIEWED BY:	BPH
SCALE:	As Noted
JOB NO.:	1403.00
DATE:	July 25, 2016
DRAWING NUMBER:	A9.72

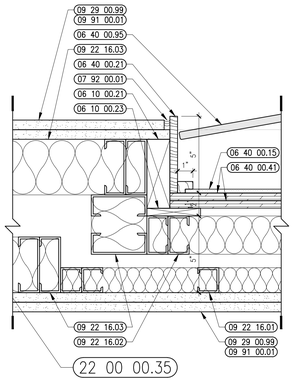

6 DISPLAY CASE DETAIL
3" = 1'-0"

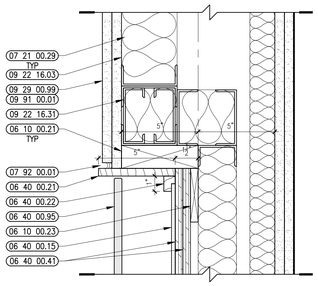

5 DISPLAY CASE DETAIL
3" = 1'-0"

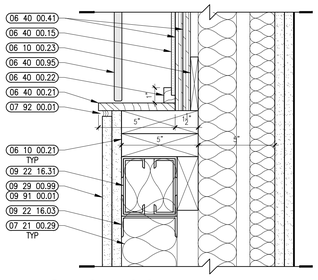

4 DISPLAY CASE DETAIL
3" = 1'-0"

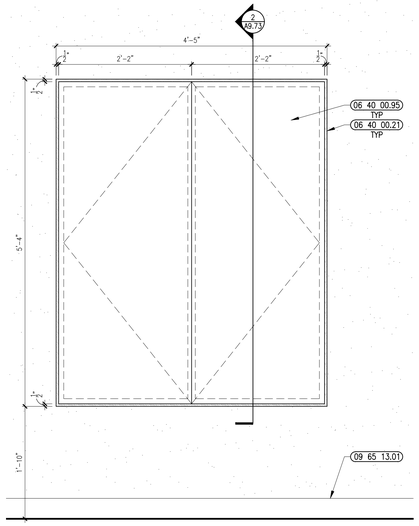

3 DISPLAY CASE ELEVATION
1" = 1'-0"

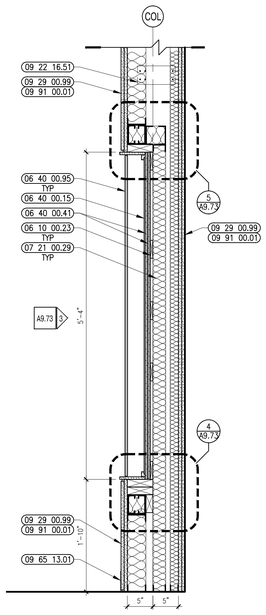

2 DISPLAY CASE SECTION
1" = 1'-0"

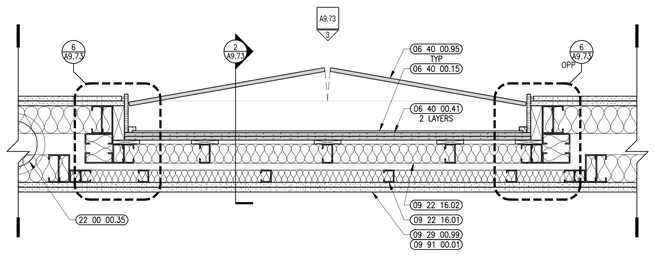

1 DISPLAY CASE ENLARGED PLAN
1 1/2" = 1'-0"

526 Boston Post Rd Wayland, MA
508.358.0790 www.ai3architects.com

BEVERLY MIDDLE SCHOOL

CABOT STREET
BEVERLY, MA 01915

Copyright © 2016 AI3 Architects, LLC

KEYNOTE LEGEND: (REFERENCE SHEETS A0.01 & A0.02 FOR MASTER KEYNOTE LIST AND KEYNOTES NOT LISTED)

06 10 00.21	WOOD BLOCKING – 2X FIRE RETARDANT TREATED – SIZE AS NOTED OR DRAWN
06 10 00.23	WOOD BLOCKING – FIRE RETARDANT TREATED – SIZE AS NOTED OR DRAWN
06 40 00.15	TACKABLE SURFACE
06 40 00.21	HARDWOOD TRIM – 1/2 INCH – TRANSPARENT FINISH
06 40 00.22	HARDWOOD TRIM – 3/4 INCH – TRANSPARENT FINISH
06 40 00.41	PLYWOOD – 1/2 INCH
06 40 00.95	GLASS DOOR WITH PIVOT HINGE – 2'-2"W X 5'-3"H
07 21 00.29	GLASS FIBER ACOUSTICAL BLANKET INSULATION – MATCH DEPTH OF STUD – UNFACED
07 92 00.01	JOINT SEALANT – TYPE AS REQUIRED
09 22 16.01	METAL STUD 1-5/8 INCH – 16 INCHES O.C. MAX
09 22 16.02	METAL STUD 2-1/2 INCH – 16 INCHES O.C. MAX
09 22 16.03	METAL STUD 3-5/8 INCH – 16 INCHES O.C. MAX
09 22 16.31	BOXED HEADER
09 22 16.51	METAL STUD BRACE
09 29 00.99	GYPSUM BOARD SYSTEM – LEVEL 4 FINISH – REFER TO FLOOR PLANS AND WALL TYPES FOR COMPONENTS
09 65 13.01	RUBBER BASE – 4"
09 91 00.01	PAINT – SEE SCHEDULE
22 00 00.35	RAIN WATER LEADER – SEE PLUMBING

90% CONSTRUCTION DOCUMENTS

NOT FOR CONSTRUCTION

NORTH ARROW

KEYPLAN

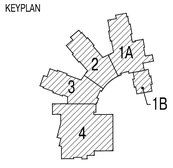

DRAWING NAME:

ADMINISTRATION SUITE DETAILS

DRAWN BY:	JMR
REVIEWED BY:	BPH
SCALE:	As Noted
JOB NO.:	1403.00
DATE:	July 25, 2016
DRAWING NUMBER:	A9.73

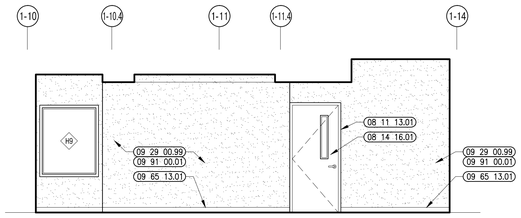

15 NURSE SUITE ELEVATION
1/4" = 1'-0"

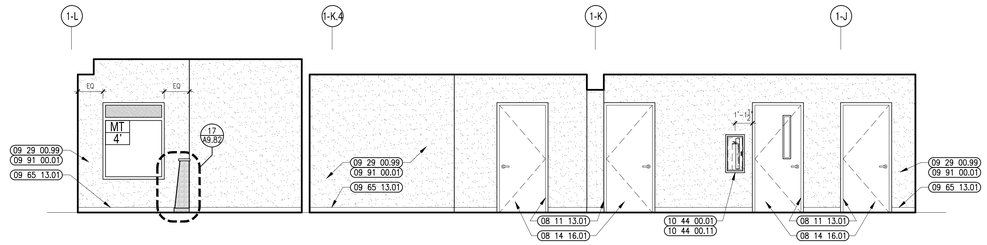

14 NURSE SUITE ELEVATION
1/4" = 1'-0"

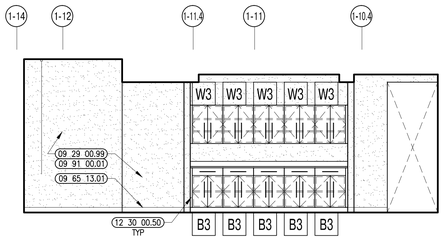

13 NURSE SUITE ELEVATION
1/4" = 1'-0"

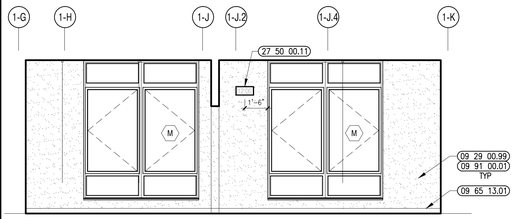

12 RESTING ELEVATION
1/4" = 1'-0"

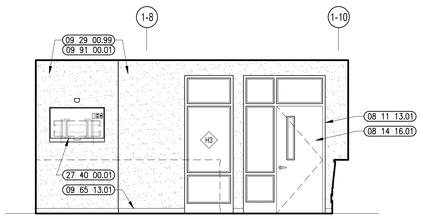

11 RECEPTION ELEVATION
1/4" = 1'-0"

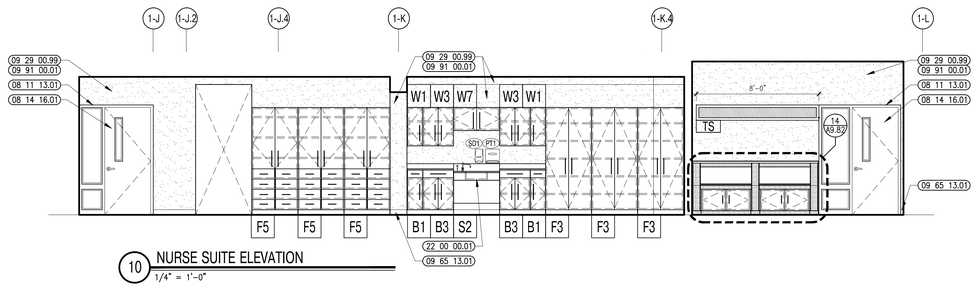

10 NURSE SUITE ELEVATION
1/4" = 1'-0"

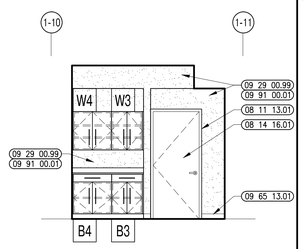

9 GUIDANCE WAITING ELEVATION
1/4" = 1'-0"

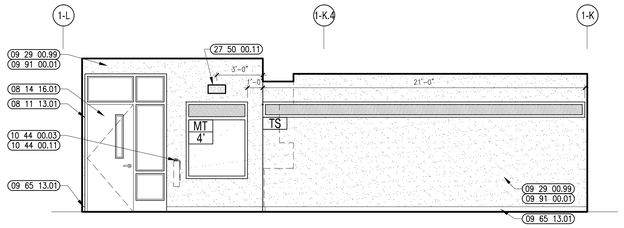

8 GUIDANCE WAITING ELEVATION
1/4" = 1'-0"

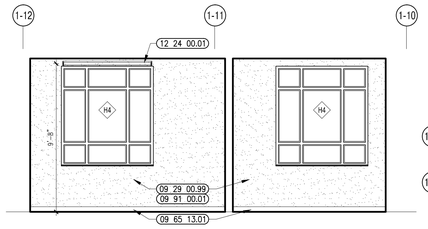

7 GUIDANCE WAITING ELEVATION
1/4" = 1'-0"

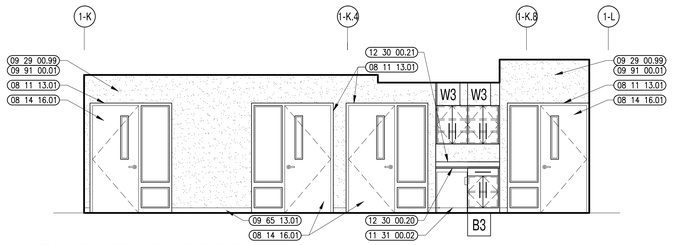

6 GUIDANCE WAITING ELEVATION
1/4" = 1'-0"

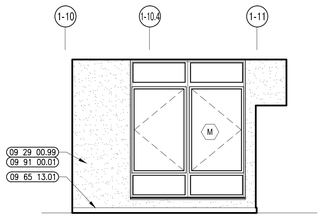

5 NURSE OFFICE ELEVATION
1/4" = 1'-0"

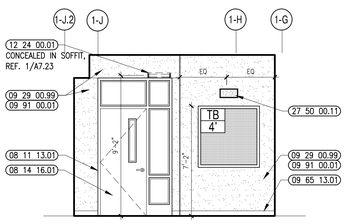

4 NURSE OFFICE ELEVATION
1/4" = 1'-0"

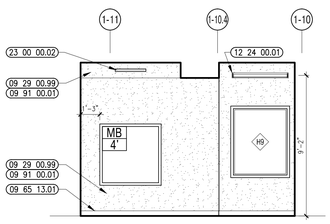

3 NURSE OFFICE ELEVATION
1/4" = 1'-0"

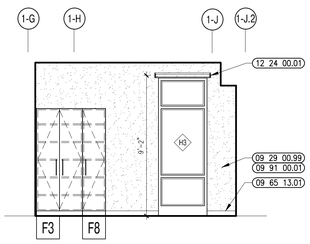

2 NURSE OFFICE ELEVATION
1/4" = 1'-0"

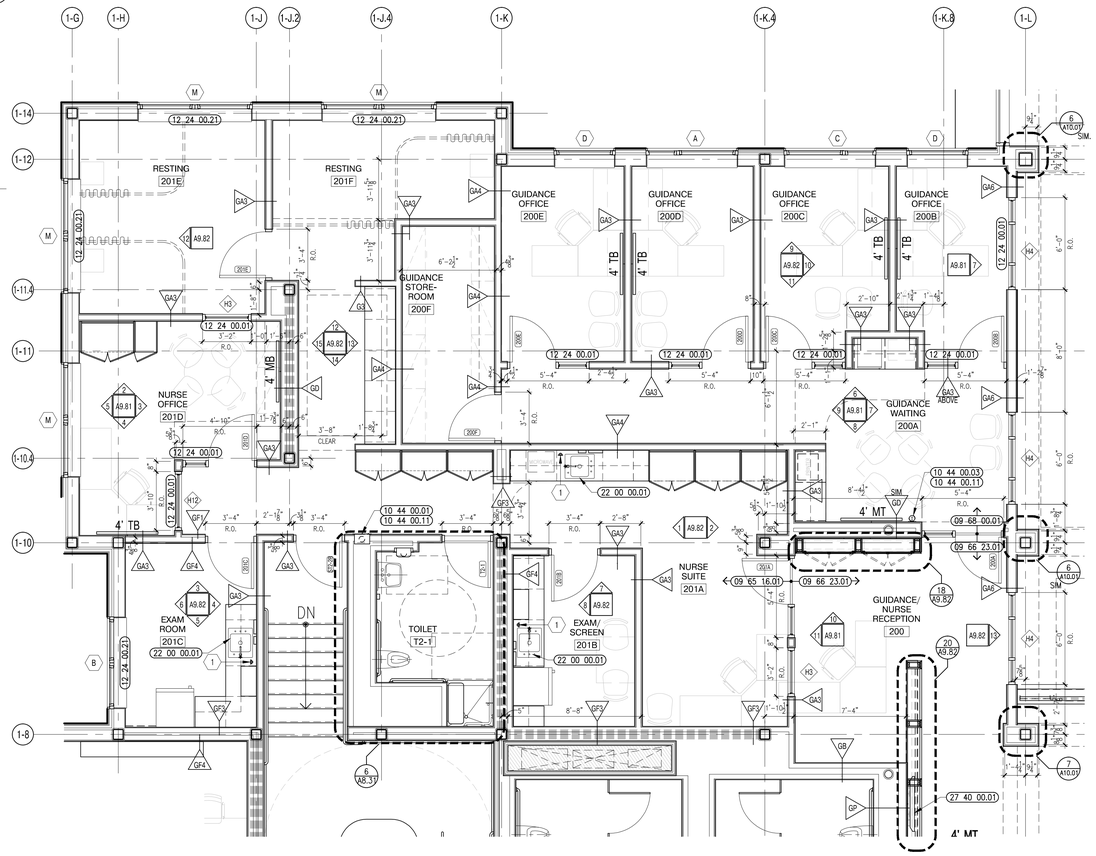

1 GUIDANCE & NURSE SUITE ENLARGED PLAN
1/4" = 1'-0"

architects
526 Boston Post Rd Wayland, MA
508.358.0790 www.ai3architects.com

BEVERLY MIDDLE SCHOOL

CABOT STREET
BEVERLY, MA 01915

Copyright © 2016 Ai3 Architects, LLC

KEYNOTE LEGEND: (REFERENCE SHEETS A0.01 & A0.02 FOR MASTER KEYNOTE LIST AND KEYNOTES NOT LISTED)

08 11 13.01	DOOR AND FRAME– SEE DOOR SCHEDULE
08 14 16.01	SOLID CORE FLUSH WOOD DOOR– SEE DOOR SCHEDULE
09 29 00.01	5/8 INCH GYPSUM BOARD – LEVEL 4 FINISH
09 29 00.99	GYPSUM BOARD SYSTEM – LEVEL 4 FINISH – REFER TO FLOOR PLANS AND WALL TYPES FOR COMPONENTS
09 65 13.01	RUBBER BASE – 4"
09 65 16.01	RESILIENT SHEET VINYL FLOORING
09 66 23.01	RESINOUS MATRIX TERRAZZO FLOORING
09 68 00.01	CARPET
09 91 00.01	PAINT – SEE SCHEDULE
10 44 00.01	FIRE EXTINGUISHER CABINET – FULLY RECESSED
10 44 00.03	FIRE EXTINGUISHER WALL MOUNTED BRACKET
10 44 00.11	FIRE EXTINGUISHER
11 31 00.02	REFRIGERATOR – UNDER-COUNTER
12 24 00.01	ROLLER SHADE
12 24 00.21	DUAL ROLLER SHADES
12 30 00.20	PLASTIC LAMINATE COUNTERTOP
12 30 00.21	PLASTIC LAMINATE BACKSPLASH – 4 INCH
12 30 00.50	FILLER PIECE SCRIBED TO ADJACENT SURFACE – FINISH TO MATCH CASEWORK
22 00 00.01	SINK – SEE PLUMBING
23 00 00.02	DIFFUSER – SEE HVAC
27 40 00.01	LCD TV – SEE TECHNOLOGY
27 50 00.11	CLOCK – SEE TECHNOLOGY

GENERAL NOTES:

1. NOT ALL POWER & DATA OUTLET/SWITCHING LOCATIONS SHOWN. CONTRACTOR TO REFER TO ELECTRICAL AND TECHNOLOGY DRAWINGS FOR LOCATIONS.
2. REFER TO DRAWING 2/A7.31 FOR FIRE EXTINGUISHER MOUNTING HEIGHTS.
3. REFER TO THE TOILET ACCESSORY SCHEDULE & LEGEND ON DRAWING A8.31 FOR ADDITIONAL INFORMATION.

90% CONSTRUCTION DOCUMENTS

NOT FOR CONSTRUCTION

NORTH ARROW

KEYPLAN

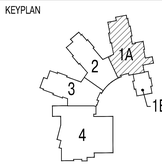

DRAWING NAME:

GUIDANCE & NURSE SUITE ENLARGED PLAN & ELEVATIONS

DRAWN BY:	JMR
REVIEWED BY:	BPH
SCALE: As Noted	DRAWING NUMBER:
JOB NO.: 1403.00	A9.81
DATE: July 25, 2016	

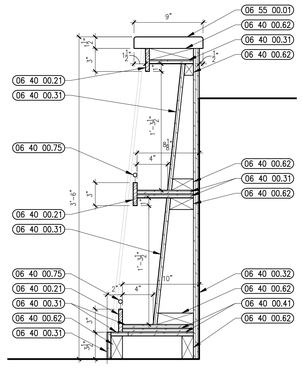

21 PAMPHLET DISPLAY SECTION
1 1/2" = 1'-0"

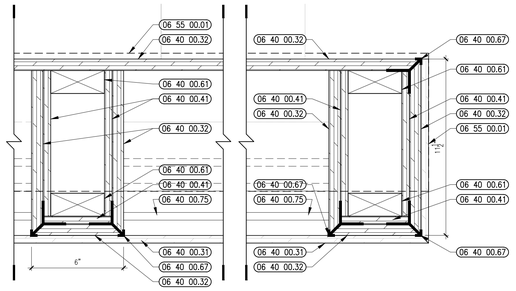

25 PAMPHLET DISPLAY DETAIL
3" = 1'-0"

24 PAMPHLET DISPLAY DETAIL
3" = 1'-0"

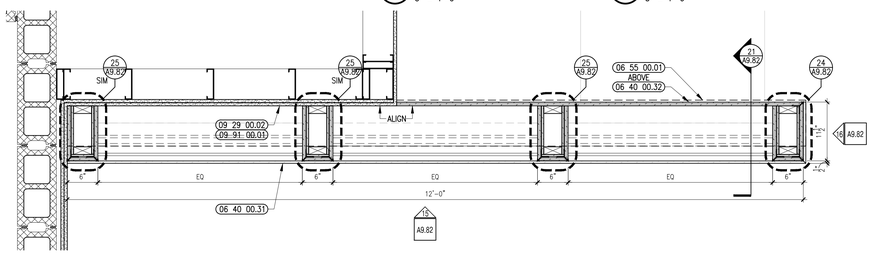

20 PAMPLET DISPLAY PLAN
1" = 1'-0"

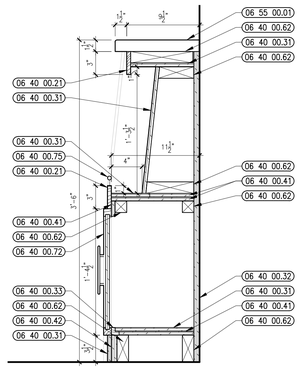

19 PAMPHLET DISPLAY SECTION
1 1/2" = 1'-0"

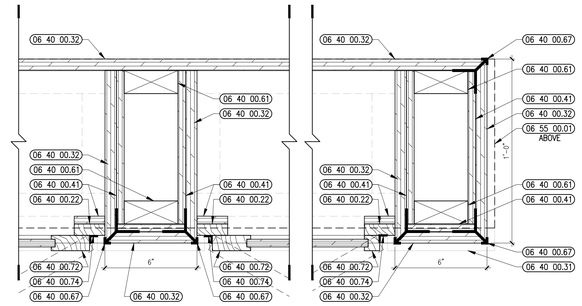

23 PAMPHLET DISPLAY DETAIL
3" = 1'-0"

22 PAMPHLET DISPLAY DETAIL
3" = 1'-0"

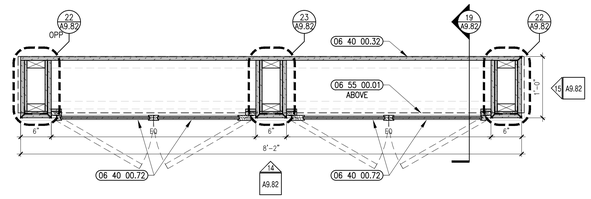

18 PAMPLET DISPLAY PLAN
1" = 1'-0"

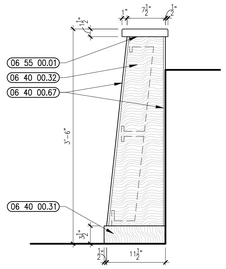

17 PAMPHLET DISPLAY ELEVATION
1" = 1'-0"

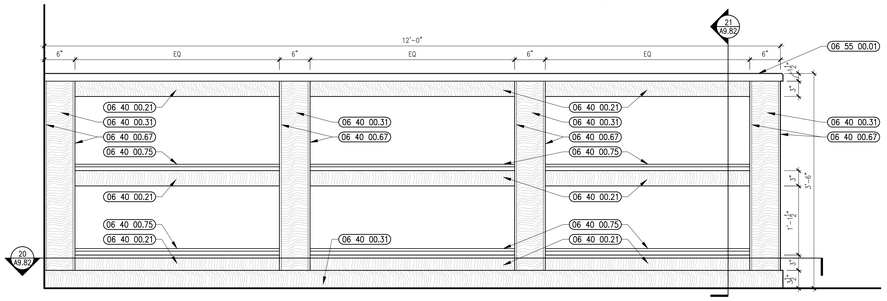

16 PAMPHLET DISPLAY ELEVATION
1" = 1'-0"

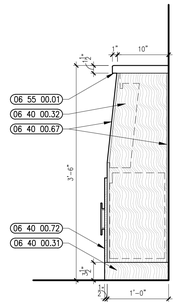

15 PAMPHLET DISPLAY ELEVATION
1" = 1'-0"

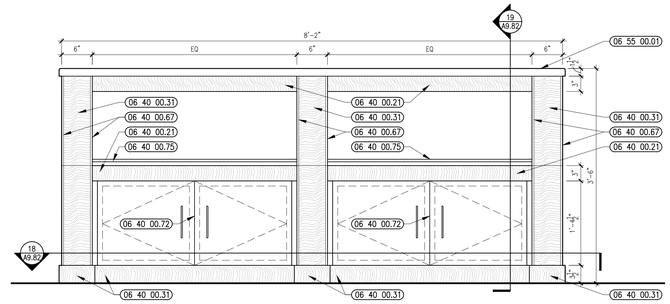

14 PAMPHLET DISPLAY ELEVATION
1" = 1'-0"

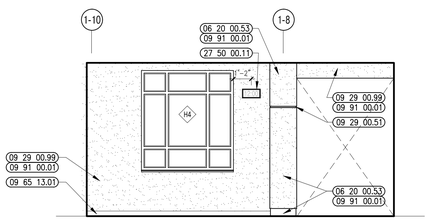

13 GUIDANCE/NURSE RECEPTION ELEVATION
1/4" = 1'-0"

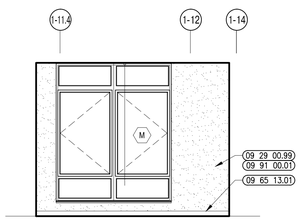

12 RESTING ELEVATION
1/4" = 1'-0"

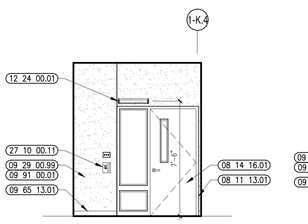

11 TYP GUIDANCE OFFICE ELEV
1/4" = 1'-0"

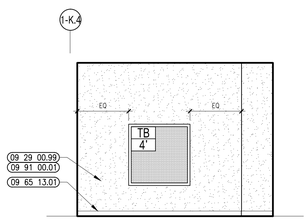

10 TYP GUIDANCE OFFICE ELEV
1/4" = 1'-0"

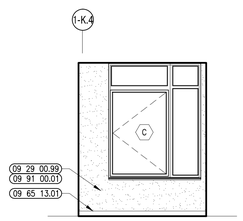

9 TYP GUIDANCE OFFICE ELEV
1/4" = 1'-0"

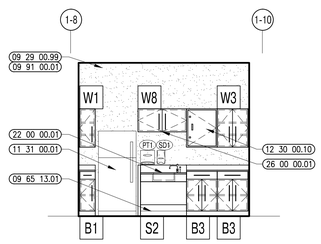

8 EXAM/SCREEN INTERIOR ELEVATION
1/4" = 1'-0"

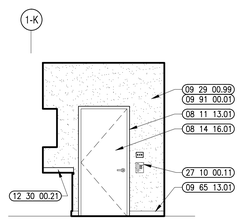

7 EXAM/SCREEN ELEVATION
1/4" = 1'-0"

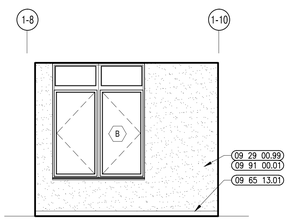

6 EXAM ROOM ELEVATION
1/4" = 1'-0"

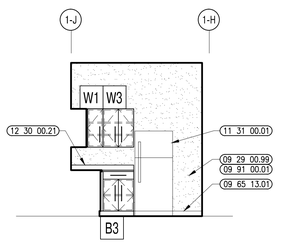

5 EXAM ROOM ELEVATION
1/4" = 1'-0"

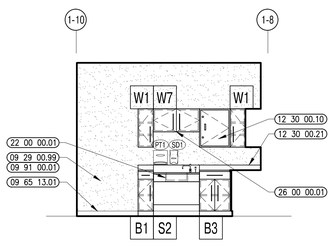

4 EXAM ROOM ELEVATION
1/4" = 1'-0"

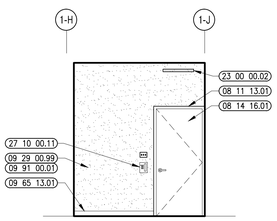

3 EXAM ROOM ELEVATION
1/4" = 1'-0"

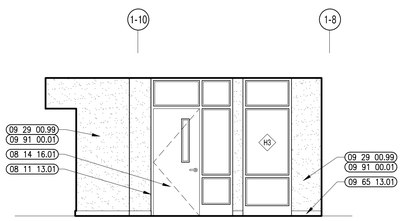

2 NURSE SUITE ELEVATION
1/4" = 1'-0"

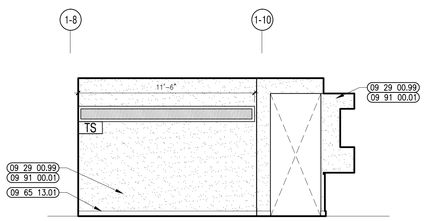

1 NURSE SUITE ELEVATION
1/4" = 1'-0"

architects

526 Boston Post Rd Wayland, MA
508.358.0790 www.ai3architects.com

BEVERLY MIDDLE SCHOOL

CABOT STREET
BEVERLY, MA 01915

Copyright © 2016 A13 Architects, LLC

KEYNOTE LEGEND: (REFERENCE SHEETS A0.01 & A0.02 FOR MASTER KEYNOTE LIST AND KEYNOTES NOT LISTED)

06 20 00.53	MDF PLYWOOD – 3/4 INCH
06 40 00.21	HARDWOOD TRIM – 1/2 INCH – TRANSPARENT FINISH
06 40 00.22	HARDWOOD TRIM – 3/4 INCH – TRANSPARENT FINISH
06 40 00.31	HARDWOOD VENEER PLYWOOD – 1/2 INCH – TRANSPARENT FINISH
06 40 00.32	HARDWOOD VENEER PLYWOOD – 3/4 INCH – TRANSPARENT FINISH
06 40 00.33	HARDWOOD VENEER PLYWOOD – 1 INCH – TRANSPARENT FINISH
06 40 00.41	PLYWOOD – 1/2 INCH
06 40 00.42	PLYWOOD – 3/4 INCH
06 40 00.61	WOOD BLOCKING – 2X
06 40 00.62	WOOD BLOCKING – SIZE AS REQUIRED
06 40 00.67	BRUSHED STAINLESS FINISH ALUMINUM OUTSIDE CORNER TRIM – 3/8 UNCH EXPOSED FACE.
06 40 00.72	CABINET DOOR
06 40 00.74	HINGE
06 40 00.75	STAINLESS STEEL BAR RAIL AND POSTS
06 55 00.01	SOLID SURFACE MATERIAL
08 11 13.01	DOOR AND FRAME– SEE DOOR SCHEDULE
08 14 16.01	SOLID CORE FLUSH WOOD DOOR– SEE DOOR SCHEDULE
09 29 00.02	5/8 INCH GYPSUM BOARD – 2 LAYERS – LEVEL 4 FINISH
09 29 00.51	ALUMINUM REVEAL TRIM – SATIN FINISH – 1 INCH
09 29 00.99	GYPSUM BOARD SYSTEM – LEVEL 4 FINISH – REFER TO FLOOR PLANS AND WALL TYPES FOR COMPONENTS
09 65 13.01	RUBBER BASE – 4"
09 91 00.01	PAINT – SEE SCHEDULE
11 31 00.01	REFRIGERATOR
12 24 00.01	ROLLER SHADE
12 30 00.10	LOCKING NARCOTICS CABINET
12 30 00.21	PLASTIC LAMINATE BACKSPLASH – 4 INCH
22 00 00.01	SINK – SEE PLUMBING
23 00 00.02	DIFFUSER – SEE HVAC
26 00 00.01	LIGHT FIXTURE – SEE ELECTRICAL
27 10 00.11	TELEPHONE JACK – SEE TECHNOLOGY – TELEPHONE DEVICE TO BE OWNER FURNISHED AND INSTALLED
27 50 00.11	CLOCK – SEE TECHNOLOGY

90% CONSTRUCTION DOCUMENTS

NOT FOR CONSTRUCTION

NORTH ARROW

KEYPLAN

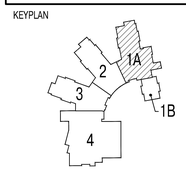

DRAWING NAME:

GUIDANCE & NURSE SUITE DETAILS

DRAWN BY:	JMR
REVIEWED BY:	BPH
SCALE:	As Noted
JOB NO.:	1403.00
DATE:	July 25, 2016
DRAWING NUMBER:	A9.82

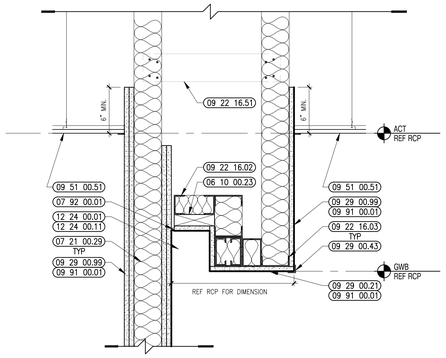

4 SHADE POCKET SOFFIT DETAIL
1 1/2" = 1'-0"

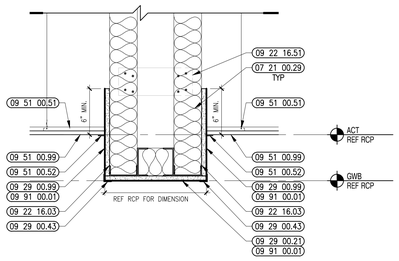

3 GUIDANCE/NURSE SUITE SOFFIT DETAIL
1 1/2" = 1'-0"

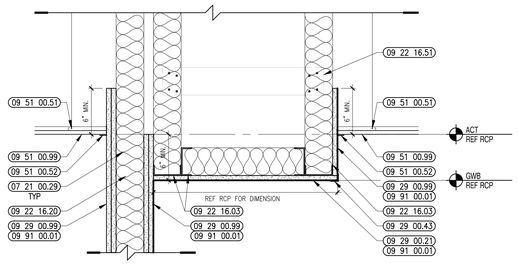

2 GUIDANCE/NURSE SUITE SOFFIT DETAIL
1 1/2" = 1'-0"

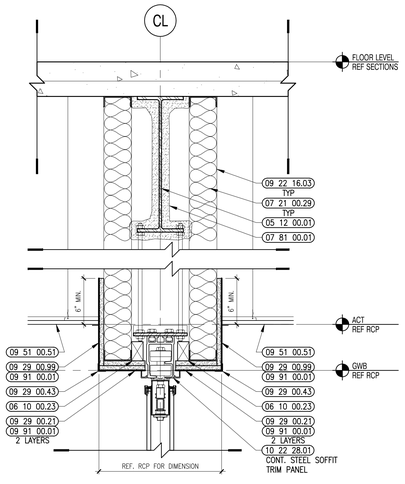

5 OPERABLE WALL PARTITION SOFFIT DETAIL
1 1/2" = 1'-0"

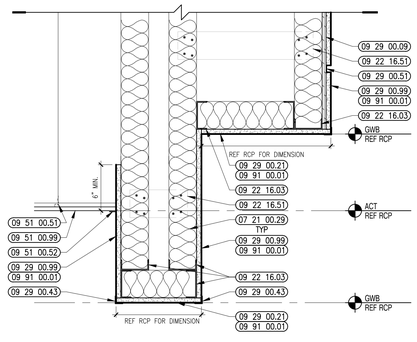

1 GUIDANCE/NURSE SUITE SOFFIT DETAIL
1 1/2" = 1'-0"

526 Boston Post Rd Wayland, MA
508.358.0790 www.ai3architects.com

BEVERLY MIDDLE SCHOOL

CABOT STREET
BEVERLY, MA 01915

Copyright © 2016 Ai3 Architects, LLC

KEYNOTE LEGEND: (REFERENCE SHEETS A0.01 & A0.02 FOR MASTER KEYNOTE LIST AND KEYNOTES NOT LISTED)

05 12 00.01	STEEL BEAM – SEE STRUCTURAL
06 10 00.23	WOOD BLOCKING – FIRE RETARDANT TREATED – SIZE AS NOTED OR DRAWN
07 21 00.29	GLASS FIBER ACOUSTICAL BLANKET INSULATION – MATCH DEPTH OF STUD – UNFACED
07 81 00.01	CEMENTITIOUS FIREPROOFING
07 92 00.01	JOINT SEALANT – TYPE AS REQUIRED
09 22 16.02	METAL STUD 2-1/2 INCH – 16 INCHES O.C. MAX
09 22 16.03	METAL STUD 3-5/8 INCH – 16 INCHES O.C. MAX
09 22 16.20	METAL STUD – REFER TO FLOOR PLANS FOR DEPTH
09 22 16.51	METAL STUD BRACE
09 29 00.09	1/2 INCH PLYWOOD – FIRE RETARDANT TREATED
09 29 00.21	5/8 INCH GYPSUM BOARD – SAG-RESISTANT – LEVEL 4 FINISH
09 29 00.43	CORNER BEAD
09 29 00.51	ALUMINUM REVEAL TRIM – SATIN FINISH – 1 INCH
09 29 00.99	GYPSUM BOARD SYSTEM – LEVEL 4 FINISH – REFER TO FLOOR PLANS AND WALL TYPES FOR COMPONENTS
09 51 00.51	ACT SUSPENSION SYSTEM
09 51 00.52	PERIMETER EDGE TRIM SYSTEM
09 51 00.99	ACOUSTICAL CEILING – REFERENCE REFLECTED CEILING PLANS FOR TYPE AND HEIGHT
09 91 00.01	PAINT – SEE SCHEDULE
10 22 28.01	FOLDING PANEL PARTITION
12 24 00.01	ROLLER SHADE
12 24 00.11	BLACKOUT SHADE

90% CONSTRUCTION DOCUMENTS

NOT FOR CONSTRUCTION

NORTH ARROW

KEYPLAN

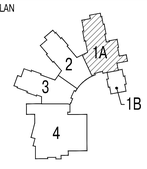

DRAWING NAME:

INTERIOR SOFFIT DETAILS

DRAWN BY:	JMR
REVIEWED BY:	BPH
SCALE:	As Noted
JOB NO.:	1403.00
DATE:	July 25, 2016
DRAWING NUMBER:	A9.83

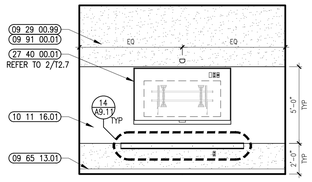

12 SPED SPEECH ELEVATION
1/4" = 1'-0"

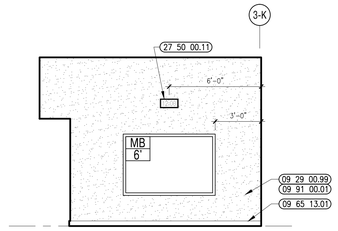

12 SPED SPEECH ELEVATION
1/4" = 1'-0"

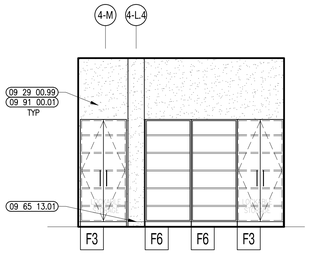

11 SPED SPEECH ELEVATION
1/4" = 1'-0"

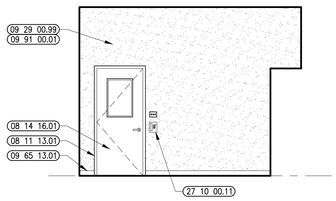

10 SPED SPEECH ELEVATION
1/4" = 1'-0"

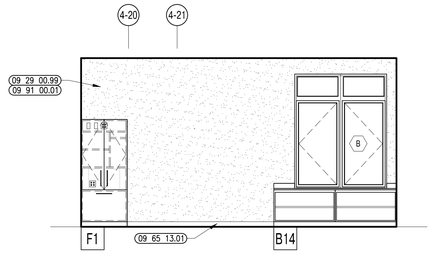

9 SPED CONFERENCE ROOM ELEVATION
1/4" = 1'-0"

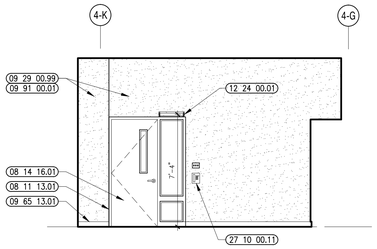

8 SPED CONFERENCE ROOM ELEVATION
1/4" = 1'-0"

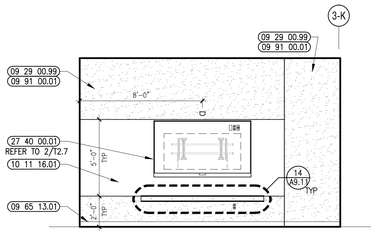

7 SPED CONFERENCE ROOM ELEVATION
1/4" = 1'-0"

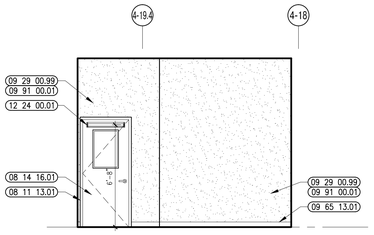

6 SPED CHAIR OFFICE ELEVATION
1/4" = 1'-0"

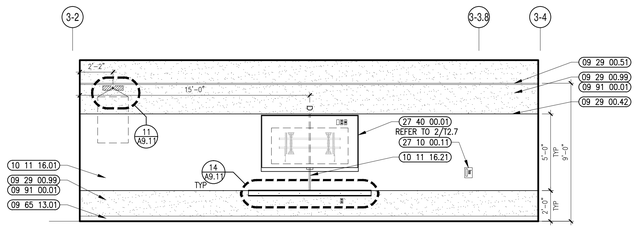

5 SELF-CONTAINED SPED ELEVATION
1/4" = 1'-0"

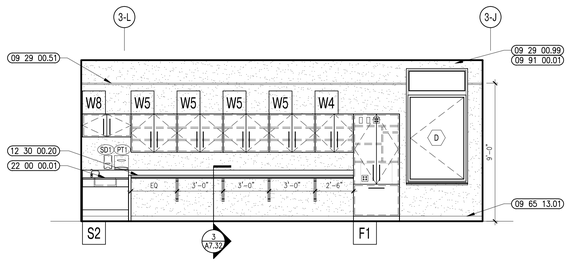

4 SELF-CONTAINED SPED ELEVATION
1/4" = 1'-0"

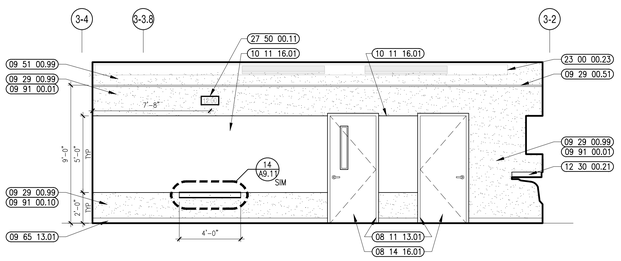

3 SELF-CONTAINED SPED ELEVATION
1/4" = 1'-0"

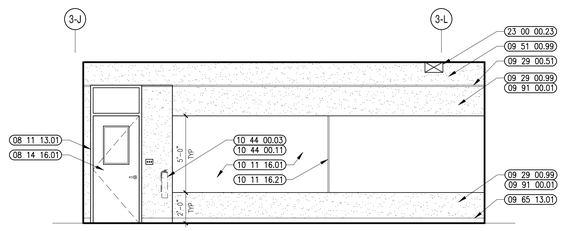

2 SELF-CONTAINED SPED ELEVATION
1/4" = 1'-0"

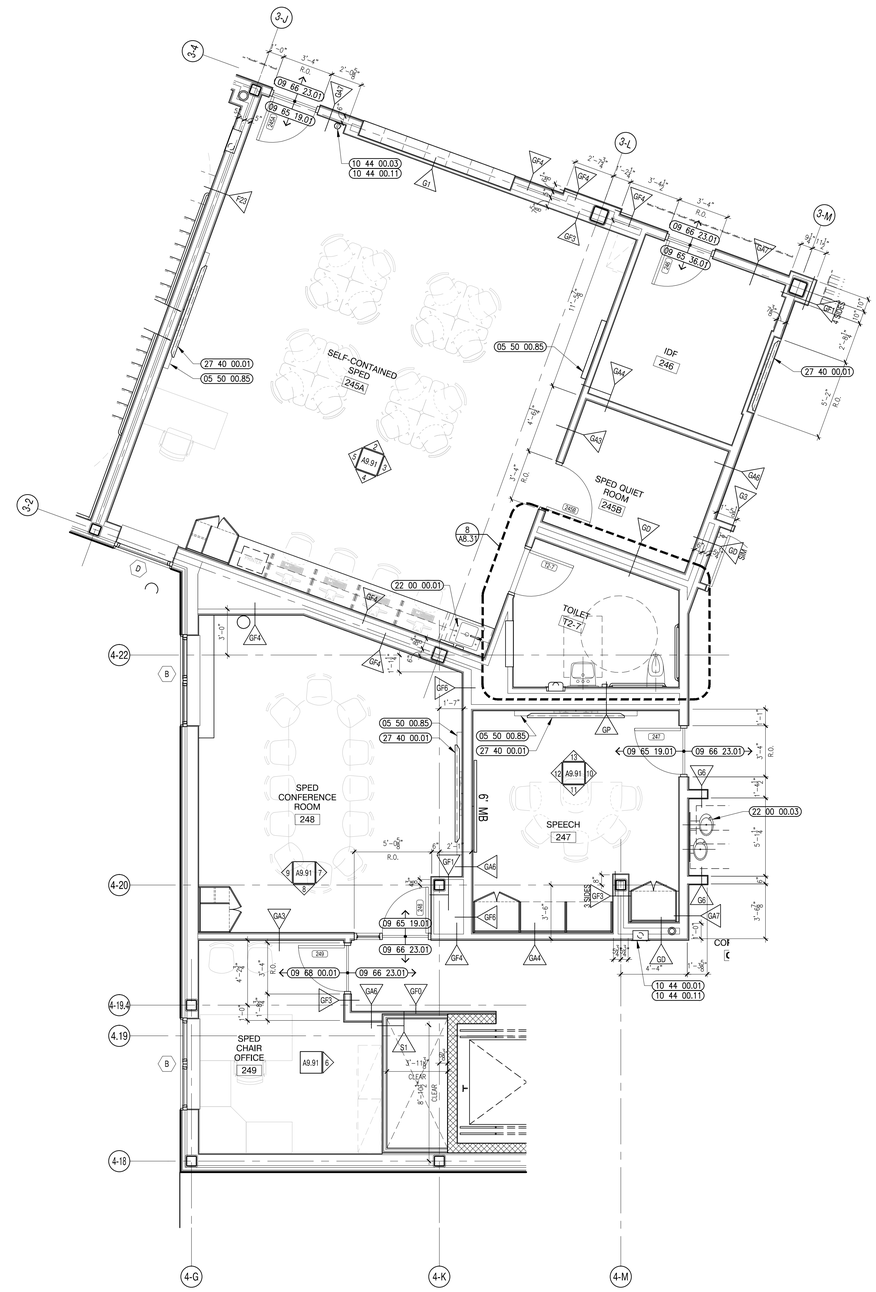

1 SPED SUITE ENLARGED PLAN
1/4" = 1'-0"

architects
526 Boston Post Rd Wayland, MA
508.358.0790 www.ai3architects.com

BEVERLY MIDDLE SCHOOL

CABOT STREET
BEVERLY, MA 01915

Copyright © 2016 Ai3 Architects, LLC

KEYNOTE LEGEND: (REFERENCE SHEETS A0.01 & A0.02 FOR MASTER KEYNOTE LIST AND KEYNOTES NOT LISTED)

05 50 00.85	ALUMINUM MARKER TROUGH
08 11 13.01	DOOR AND FRAME– SEE DOOR SCHEDULE
08 14 16.01	SOLID CORE FLUSH WOOD DOOR– SEE DOOR SCHEDULE
09 29 00.01	5/8 INCH GYPSUM BOARD – LEVEL 4 FINISH
09 29 00.42	REVEAL – PAINTABLE 3/4 INCH
09 29 00.51	ALUMINUM REVEAL TRIM – SATIN FINISH – 1 INCH
09 29 00.99	GYPSUM BOARD SYSTEM – LEVEL 4 FINISH – REFER TO FLOOR PLANS AND WALL TYPES FOR COMPONENTS
09 51 00.99	ACOUSTICAL CEILING – REFERENCE REFLECTED CEILING PLANS FOR TYPE AND HEIGHT
09 65 13.01	RUBBER BASE – 4"
09 65 19.01	VINYL COMPOSITION TILE
09 65 36.01	STATIC–CONTROL COMPOSITE TILE
09 66 23.01	RESINOUS MATRIX TERRAZZO FLOORING
09 68 00.01	CARPET
09 91 00.01	PAINT – SEE SCHEDULE
09 91 00.10	DRY ERASE PAINT
10 11 16.01	DRY MARKER BOARD
10 11 16.21	DRY ERASE H–BAR SPLICE
10 44 00.01	FIRE EXTINGUISHER CABINET – FULLY RECESSED
10 44 00.03	FIRE EXTINGUISHER WALL MOUNTED BRACKET
10 44 00.11	FIRE EXTINGUISHER
12 24 00.01	ROLLER SHADE
12 30 00.20	PLASTIC LAMINATE COUNTERTOP
12 30 00.21	PLASTIC LAMINATE BACKSPLASH – 4 INCH
22 00 00.01	SINK – SEE PLUMBING
22 00 00.03	WATER FOUNTAIN – SEE PLUMBING
23 00 00.23	DUCT – SEE HVAC
27 10 00.11	TELEPHONE JACK – SEE TECHNOLOGY – TELEPHONE DEVICE TO BE OWNER FURNISHED AND INSTALLED
27 40 00.01	LCD TV – SEE TECHNOLOGY
27 50 00.11	CLOCK – SEE TECHNOLOGY

GENERAL NOTES:

1. NOT ALL POWER & DATA OUTLET/SWITCHING LOCATIONS SHOWN. CONTRACTOR TO REFER TO ELECTRICAL AND TECHNOLOGY DRAWINGS FOR LOCATIONS.
2. REFER TO DRAWING 2/A7.31 FOR FIRE EXTINGUISHER MOUNTING HEIGHTS.
3. REFER TO THE TOILET ACCESSORY SCHEDULE & LEGEND ON DRAWING A8.31 FOR ADDITIONAL INFORMATION.
4. REFER TO 3/A7.31 FOR 101116.01 EDGE DETAILS, TYP.

90% CONSTRUCTION DOCUMENTS

NOT FOR CONSTRUCTION

NORTH ARROW

KEYPLAN

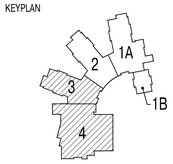

DRAWING NAME:

SPED SUITE ENLARGED PLAN & ELEVATIONS

DRAWN BY:	JMR / ETF
REVIEWED BY:	BPH
SCALE:	As Noted
JOB NO.:	1403.00
DATE:	July 25, 2016
DRAWING NUMBER:	A9.91

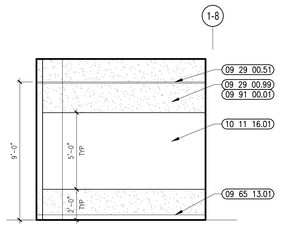

18 OPPORTUNITY ROOM ELEVATION
1/4" = 1'-0"

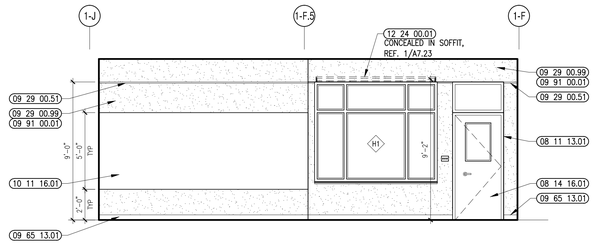

17 OPPORTUNITY ROOM ELEVATION
1/4" = 1'-0"

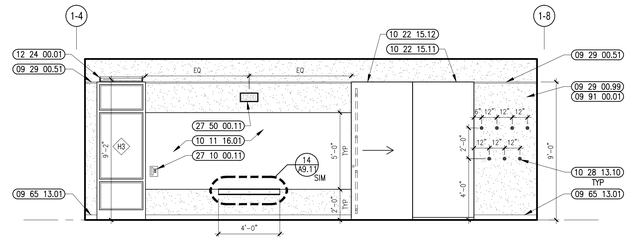

16 OPPORTUNITY ROOM ELEVATION
1/4" = 1'-0"

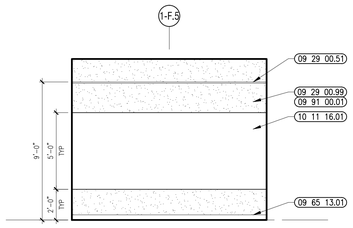

15 OPPORTUNITY ROOM ELEVATION
1/4" = 1'-0"

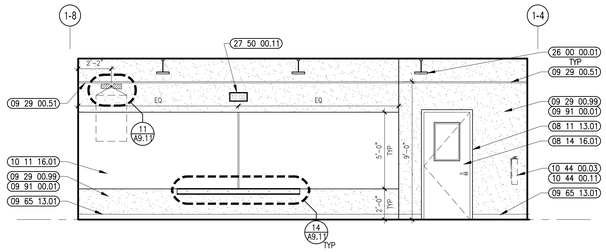

14 OPPORTUNITY ROOM ELEVATION
1/4" = 1'-0"

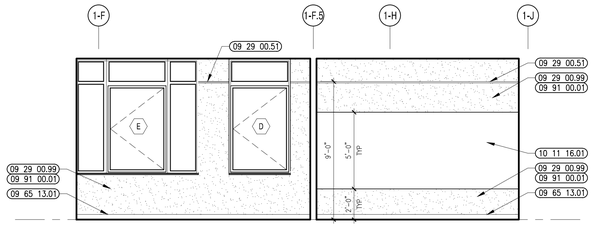

13 OPPORTUNITY ROOM ELEVATION
1/4" = 1'-0"

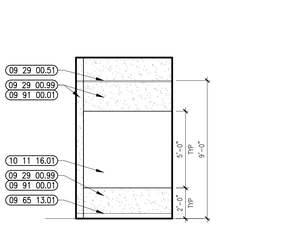

12 OPPORTUNITY ROOM ELEVATION
1/4" = 1'-0"

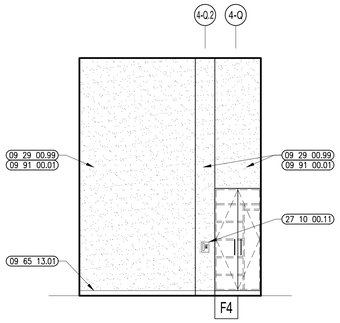

10 ATTAIN (AUTISM) ELEVATION
1/4" = 1'-0"

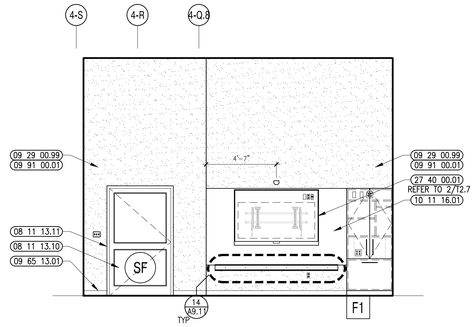

9 ATTAIN (AUTISM) ELEVATION
1/4" = 1'-0"

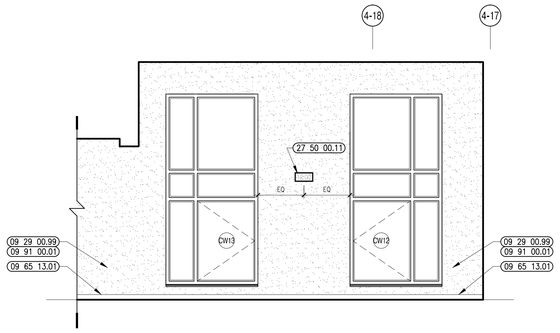

8 ATTAIN (AUTISM) ELEVATION
1/4" = 1'-0"

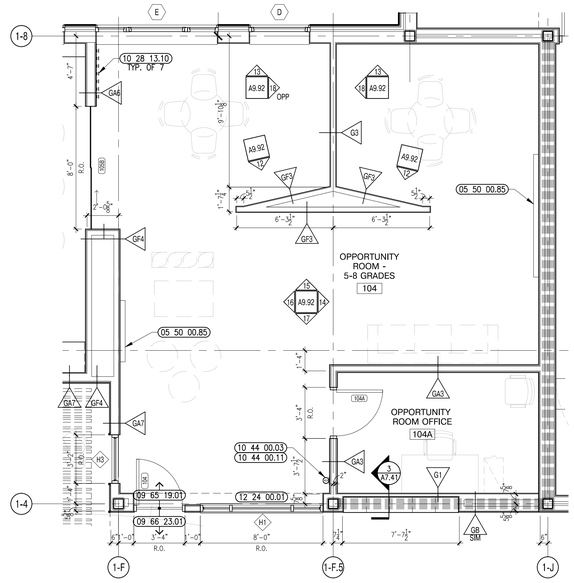

11 OPPORTUNITY ROOM ENLARGED PLAN
1/4" = 1'-0"

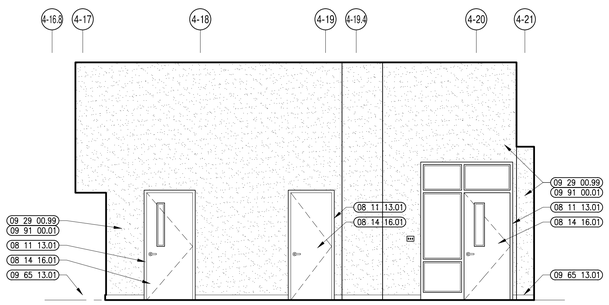

7 ATTAIN (AUTISM) ELEVATION
1/4" = 1'-0"

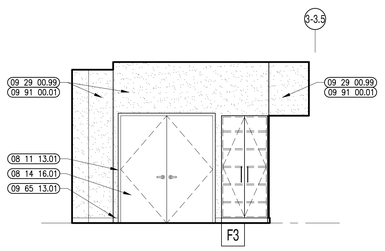

6 ATTAIN (AUTISM) ELEVATION
1/4" = 1'-0"

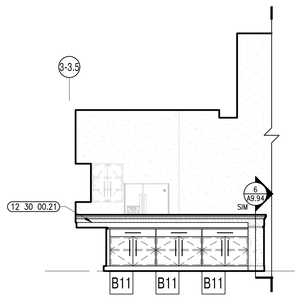

5 ATTAIN (AUTISM) ELEVATION
1/4" = 1'-0"

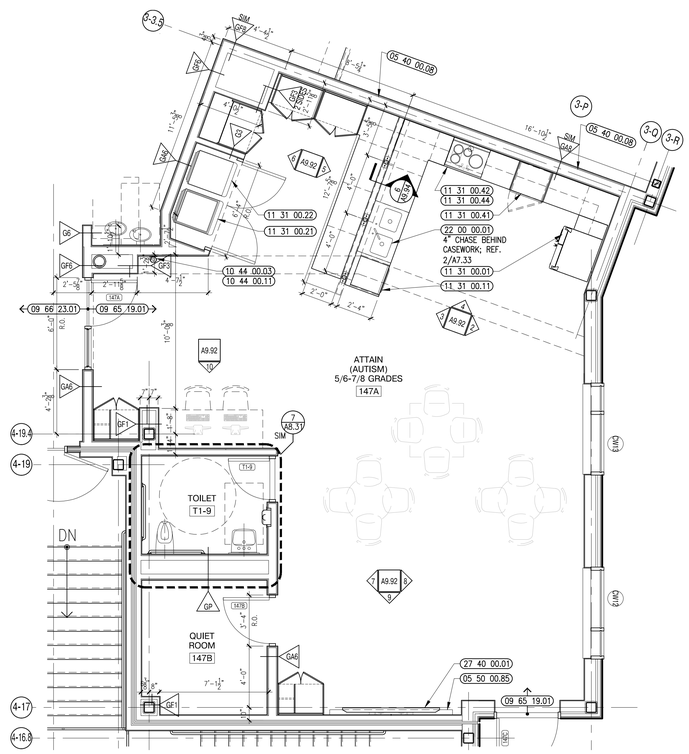

1 ATTAIN (AUTISM) ENLARGED PLAN
1/4" = 1'-0"

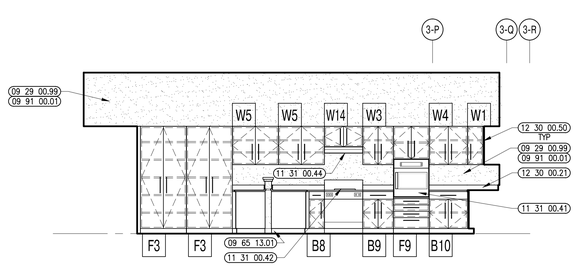

4 ATTAIN (AUTISM) ELEVATION
1/4" = 1'-0"

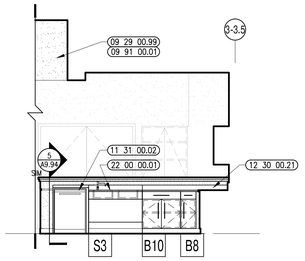

3 ATTAIN (AUTISM) ELEVATION
1/4" = 1'-0"

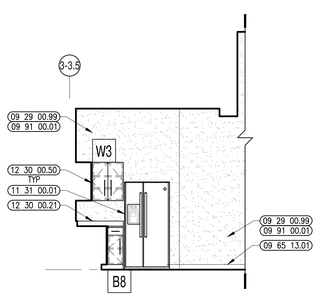

2 ATTAIN (AUTISM) ELEVATION
1/4" = 1'-0"

architects
526 Boston Post Rd Wayland, MA
508.358.0790 www.ai3architects.com

BEVERLY MIDDLE SCHOOL

CABOT STREET
BEVERLY, MA 01915

Copyright © 2016 Ai3 Architects, LLC

KEYNOTE LEGEND: (REFERENCE SHEETS A0.01 & A0.02 FOR MASTER KEYNOTE LIST AND KEYNOTES NOT LISTED)

05 40 00.08	STEEL STUDS – 8 INCH – 16 INCHES O.C. MAX
05 50 00.85	ALUMINUM MARKER TROUGH
08 11 13.01	DOOR AND FRAME– SEE DOOR SCHEDULE
08 11 13.10	STEEL DOOR – SEE SCHEDULE FOR TYPES
08 11 13.11	STEEL FRAME – SEE SCHEDULE FOR TYPES
08 14 16.01	SOLID CORE FLUSH WOOD DOOR– SEE DOOR SCHEDULE
09 29 00.51	ALUMINUM REVEAL TRIM – SATIN FINISH – 1 INCH
09 29 00.99	GYPSUM BOARD SYSTEM – LEVEL 4 FINISH – REFER TO FLOOR PLANS AND WALL TYPES FOR COMPONENTS
09 65 13.01	RUBBER BASE – 4"
09 65 19.01	VINYL COMPOSITION TILE
09 66 23.01	RESINOUS MATRIX TERRAZZO FLOORING
09 91 00.01	PAINT – SEE SCHEDULE
10 11 16.01	DRY MARKER BOARD
10 22 15.11	FIXED GLASS PANEL
10 22 15.12	SLIDING GLASS DOOR
10 28 13.10	COAT HOOK
10 44 00.03	FIRE EXTINGUISHER WALL MOUNTED BRACKET
10 44 00.11	FIRE EXTINGUISHER
11 31 00.01	REFRIGERATOR
11 31 00.02	REFRIGERATOR – UNDER–COUNTER
11 31 00.11	DISHWASHER – UNDER–COUNTER
11 31 00.21	WASHER
11 31 00.22	DRYER
11 31 00.41	WALL OVEN – BUILT–IN – ELECTRIC
11 31 00.42	IN COUNTER COOKTOP – ELECTRIC
11 31 00.44	RANGE HOOD
12 24 00.01	ROLLER SHADE
12 30 00.21	PLASTIC LAMINATE BACKSPLASH – 4 INCH
12 30 00.50	FILLER PIECE SCRIBED TO ADJACENT SURFACE – FINISH TO MATCH CASEWORK
22 00 00.01	SINK – SEE PLUMBING
26 00 00.01	LIGHT FIXTURE – SEE ELECTRICAL
27 10 00.11	TELEPHONE JACK – SEE TECHNOLOGY – TELEPHONE DEVICE TO BE OWNER FURNISHED AND INSTALLED
27 40 00.01	LCD TV – SEE TECHNOLOGY
27 50 00.11	CLOCK – SEE TECHNOLOGY

GENERAL NOTES:

1. NOT ALL POWER & DATA OUTLET/SWITCHING LOCATIONS SHOWN. CONTRACTOR TO REFER TO ELECTRICAL AND TECHNOLOGY DRAWINGS FOR LOCATIONS.
2. REFER TO DRAWING 2/A7.31 FOR FIRE EXTINGUISHER MOUNTING HEIGHTS.
3. REFER TO THE TOILET ACCESSORY SCHEDULE & LEGEND ON DRAWING A8.31 FOR ADDITIONAL INFORMATION.
4. REFER TO 3/A7.31 FOR 101116.01 EDGE DETAILS, TYP.

90% CONSTRUCTION DOCUMENTS

NOT FOR CONSTRUCTION

NORTH ARROW

KEYPLAN

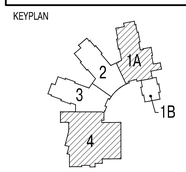

DRAWING NAME:

ATTAIN (AUTISM) & SPED OPPORTUNITY ROOM ENLARGED PLANS & ELEVS

DRAWN BY:	JMR / ETF
REVIEWED BY:	BPH
SCALE:	As Noted
JOB NO.:	1403.00
DATE:	July 25, 2016
DRAWING NUMBER:	A9.92

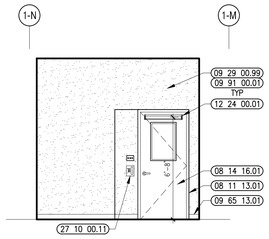

22 SCHOOL ADJUSTMENT COUNSELOR
1/4" = 1'-0"

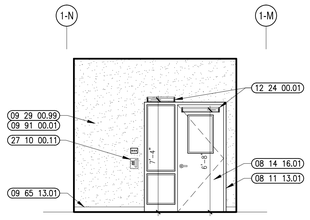

21 SPED INSTRUCTIONAL COACH ELEVATION
1/4" = 1'-0"

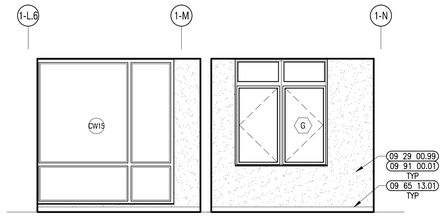

20 SPED INSTRUCTIONAL COACH ELEVATION
1/4" = 1'-0"

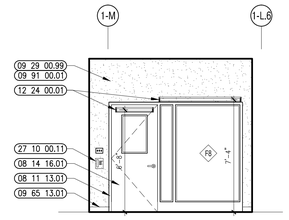

19 SPED MEETING ROOM ELEVATION
1/4" = 1'-0"

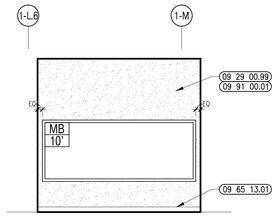

18 SPED MEETING ROOM ELEVATION
1/4" = 1'-0"

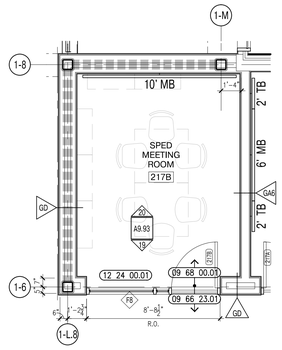

17 SPED MEETING ROOM ENLARGED PLAN
1/4" = 1'-0"

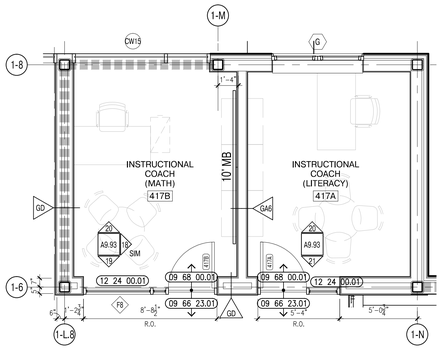

16 SPED INSTRUCTIONAL COACH ENLARGED PLANS
1/4" = 1'-0"

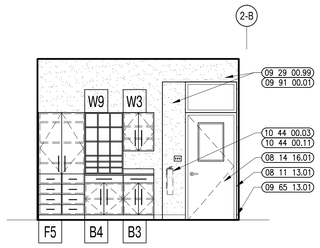

15 SBI MATH/SS INTERIOR ELEVATION
1/4" = 1'-0"

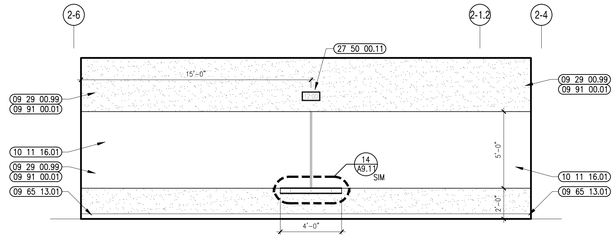

14 SBI MATH/SS INTERIOR ELEVATION
1/4" = 1'-0"

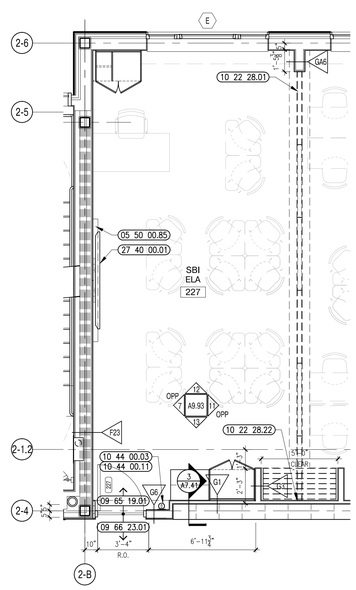

10 SBI ELA ENLARGED PLAN
1/4" = 1'-0"

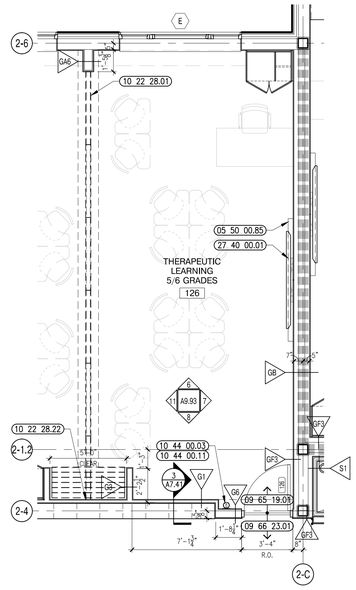

9 THERAPEUTIC LEARNING 5/6 ENLARGED PLAN
1/4" = 1'-0"

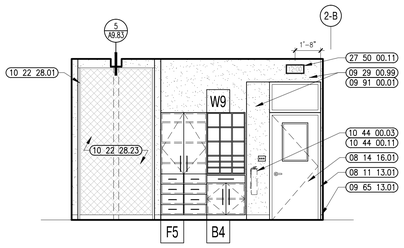

13 SBI ELA/READING INTERIOR ELEVATION
1/4" = 1'-0"

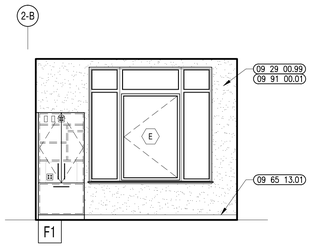

12 SBI INTERIOR ELEVATION
1/4" = 1'-0"

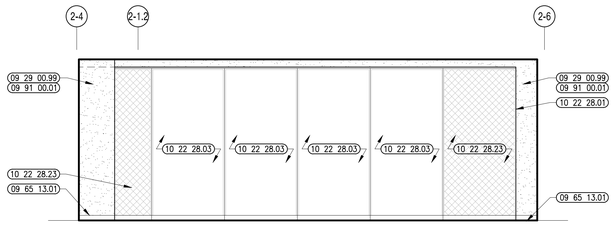

11 LEARNING CENTER 5/6 ELEVATION
1/4" = 1'-0"

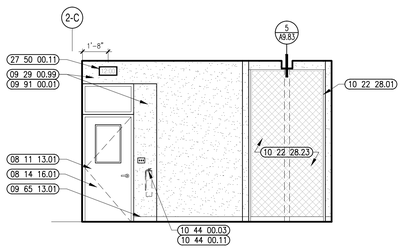

8 LEARNING CENTER 5/6 ELEVATION
1/4" = 1'-0"

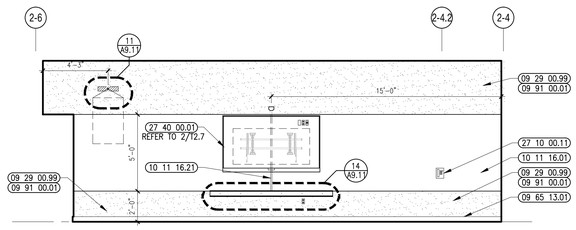

7 LEARNING CENTER 5/6 ELEVATION
1/4" = 1'-0"

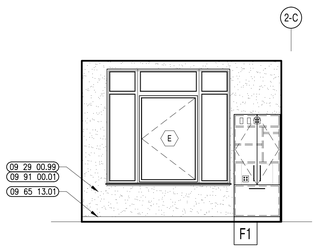

6 LEARNING CENTER 5/6 ELEVATION
1/4" = 1'-0"

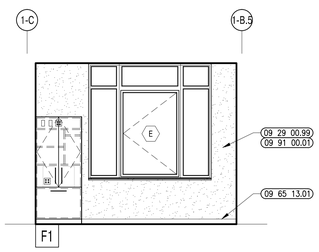

5 ELL ELEVATION
1/4" = 1'-0"

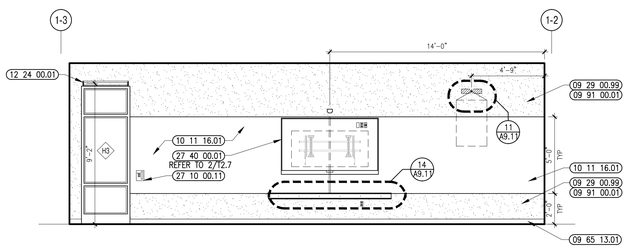

4 ELL ELEVATION
1/4" = 1'-0"

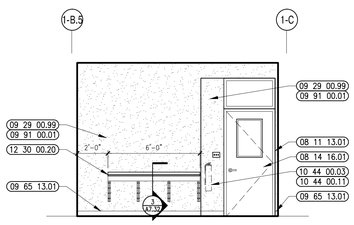

3 ELL ELEVATION
1/4" = 1'-0"

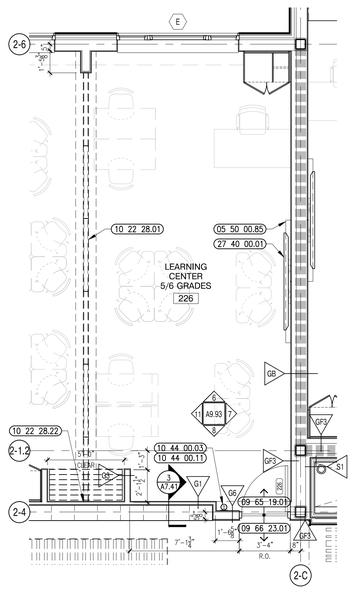

2 LEARNING CENTER 5/6 ENLARGED PLAN
1/4" = 1'-0"

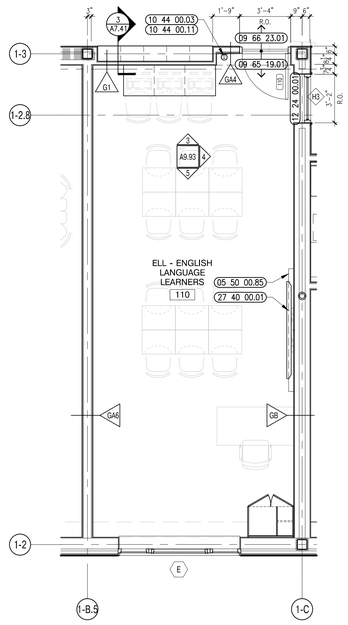

1 ELL ENLARGED PLAN
1/4" = 1'-0"

architects
526 Boston Post Rd Wayland, MA
508.358.0790 www.ai3architects.com

BEVERLY MIDDLE SCHOOL

CABOT STREET
BEVERLY, MA 01915

Copyright © 2016 AI3 Architects, LLC

KEYNOTE LEGEND: (REFERENCE SHEETS A0.01 & A0.02 FOR MASTER KEYNOTE LIST AND KEYNOTES NOT LISTED)

05 50 00.85	ALUMINUM MARKER TROUGH
08 11 13.01	DOOR AND FRAME– SEE DOOR SCHEDULE
08 14 16.01	SOLID CORE FLUSH WOOD DOOR– SEE DOOR SCHEDULE
09 29 00.01	HIGH PERFORMANCE COATING
09 29 00.42	REVEAL – PAINTABLE 3/4 INCH
09 29 00.99	GYPSUM BOARD SYSTEM – LEVEL 4 FINISH – REFER TO FLOOR PLANS AND WALL TYPES FOR COMPONENTS
09 65 13.01	RUBBER BASE – 4"
09 65 19.01	VINYL COMPOSITION TILE
09 66 23.01	RESINOUS MATRIX TERRAZZO FLOORING
09 68 00.01	CARPET
09 91 00.01	PAINT – SEE SCHEDULE
09 91 00.10	DRY ERASE PAINT
10 11 16.01	DRY MARKER BOARD
10 11 16.21	DRY ERASE H–BAR SPLICE
10 22 28.01	FOLDING PANEL PARTITION
10 22 28.03	FOLDING PANEL PARTITION MARKERBOARD
10 22 28.22	STACKING LEVEL CLOSURE
10 22 28.23	WOVEN FABRIC FINISH
10 44 00.03	FIRE EXTINGUISHER WALL MOUNTED BRACKET
10 44 00.11	FIRE EXTINGUISHER
12 24 00.01	ROLLER SHADE
12 30 00.20	PLASTIC LAMINATE COUNTERTOP
27 10 00.11	TELEPHONE JACK – SEE TECHNOLOGY – TELEPHONE DEVICE TO BE OWNER FURNISHED AND INSTALLED
27 40 00.01	LCD TV – SEE TECHNOLOGY
27 50 00.11	CLOCK – SEE TECHNOLOGY

GENERAL NOTES:

1. NOT ALL POWER & DATA OUTLET/SWITCHING LOCATIONS SHOWN. CONTRACTOR TO REFER TO ELECTRICAL AND TECHNOLOGY DRAWINGS FOR LOCATIONS.
2. REFER TO DRAWING 2/A7.31 FOR FIRE EXTINGUISHER MOUNTING HEIGHTS.
3. REFER TO 3/A7.31 FOR 101116.01 EDGE DETAILS, TYP.

90% CONSTRUCTION DOCUMENTS

NOT FOR CONSTRUCTION

NORTH ARROW

KEYPLAN

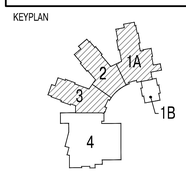

DRAWING NAME:

SPED ACADEMIC CLASSROOMS ENLARGED PLANS & ELEVATIONS

DRAWN BY:	JMR / ETF
REVIEWED BY:	BPH
SCALE:	As Noted
JOB NO.:	1403.00
DATE:	July 25, 2016
DRAWING NUMBER:	A9.93

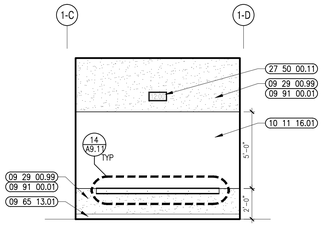

17 SMALL GROUP ROOM ELEVATION
1/4" = 1'-0"

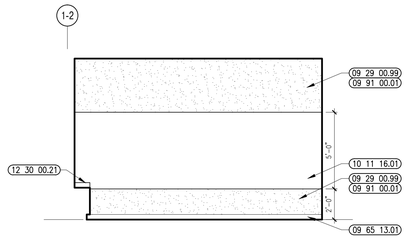

16 SMALL GROUP ROOM ELEVATION
1/4" = 1'-0"

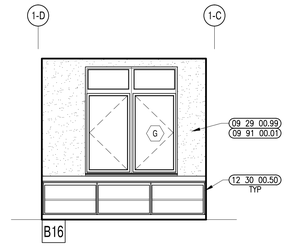

15 SMALL GROUP ROOM ELEVATION
1/4" = 1'-0"

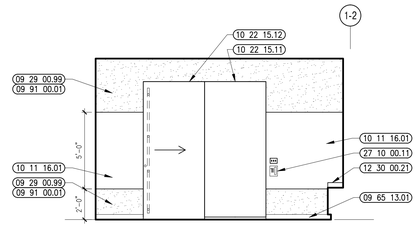

14 SMALL GROUP ROOM ELEVATION
1/4" = 1'-0"

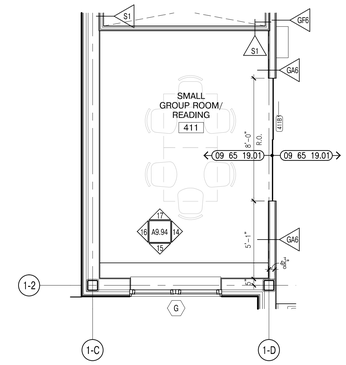

13 SMALL GROUP ROOM ENLARGED PLAN
1/4" = 1'-0"

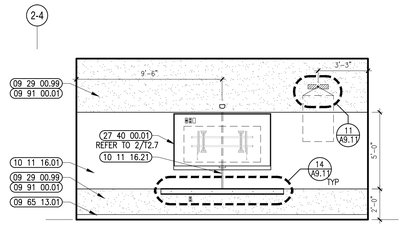

12 SSP ELEVATION
1/4" = 1'-0"

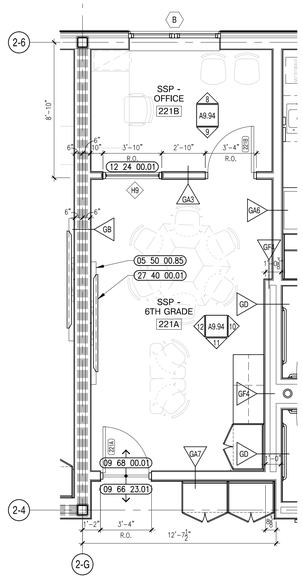

7 SSP ENLARGED PLAN
1/4" = 1'-0"

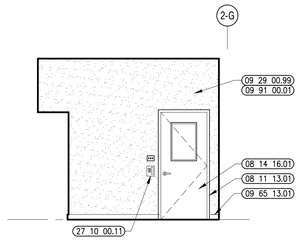

11 SSP ELEVATION
1/4" = 1'-0"

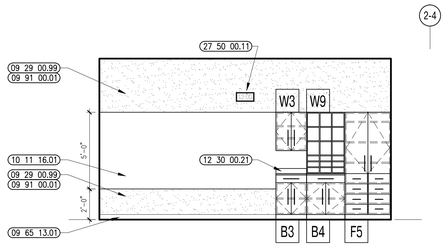

10 SSP ELEVATION
1/4" = 1'-0"

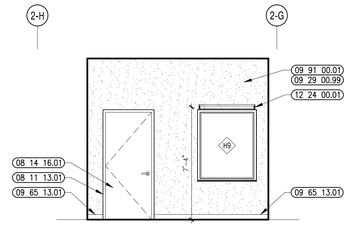

9 SSP ELEVATION
1/4" = 1'-0"

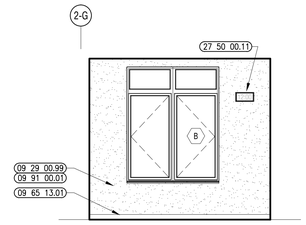

8 SSP - OFFICE ELEVATION
1/4" = 1'-0"

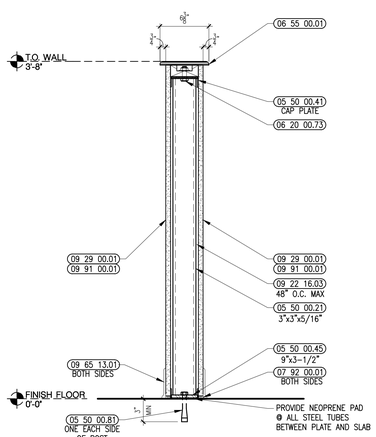

6 SECTION DETAIL @ PARTIAL HEIGHT WALL
1 -1/2" = 1'-0"

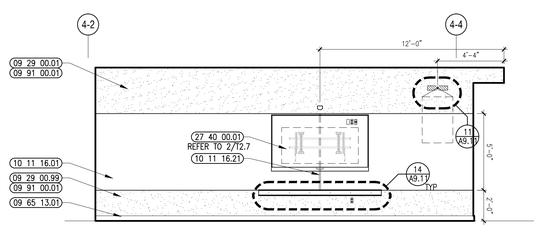

5 OT/ PT INTERIOR ELEVATION
1/4" = 1'-0"

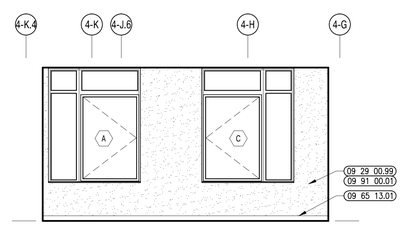

4 OT/ PT INTERIOR ELEVATION
1/4" = 1'-0"

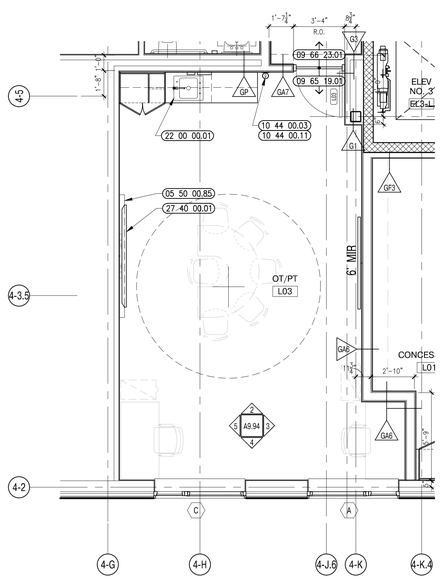

1 OT/PT ENLARGED PLAN
1/4" = 1'-0"

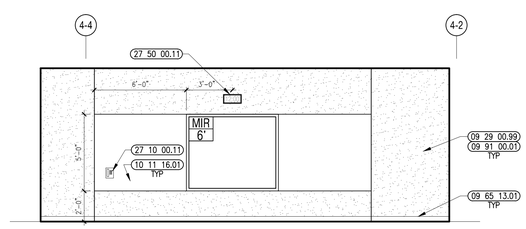

3 OT/ PT INTERIOR ELEVATION
1/4" = 1'-0"

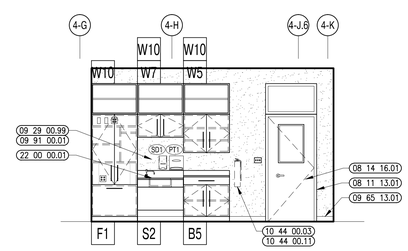

2 OT/ PT INTERIOR ELEVATION
1/4" = 1'-0"

architects
526 Boston Post Rd Wayland, MA
508.358.0790 www.ai3architects.com

BEVERLY MIDDLE SCHOOL

CABOT STREET
BEVERLY, MA 01915

Copyright © 2016 Ai3 Architects, LLC

KEYNOTE LEGEND: (REFERENCE SHEETS A0.01 & A0.02 FOR MASTER KEYNOTE LIST AND KEYNOTES NOT LISTED)

05 50 00.21	STEEL TUBE – SEE STRUCTURAL
05 50 00.41	STEEL PLATE – 1/4 INCH THICK
05 50 00.45	STEEL PLATE – 5/8 INCH THICK
05 50 00.81	ANCHOR BOLT
05 50 00.85	ALUMINUM MARKER TROUGH
06 20 00.73	STAINLESS STEEL BOLTS – NUTS AND WASHERS – 1/2 INCH DIA
06 55 00.01	SOLID SURFACE MATERIAL
07 92 00.01	JOINT SEALANT – TYPE AS REQUIRED
08 11 13.01	DOOR AND FRAME– SEE DOOR SCHEDULE
08 14 16.01	SOLID CORE FLUSH WOOD DOOR– SEE DOOR SCHEDULE
09 22 16.03	METAL STUD 3–5/8 INCH – 16 INCHES O.C. MAX
09 29 00.01	5/8 INCH GYPSUM BOARD – LEVEL 4 FINISH
09 29 00.99	GYPSUM BOARD SYSTEM – LEVEL 4 FINISH – REFER TO FLOOR PLANS AND WALL TYPES FOR COMPONENTS
09 65 13.01	RUBBER BASE – 4"
09 65 19.01	HIGH PERFORMANCE COATING
09 66 23.01	RESINOUS MATRIX TERRAZZO FLOORING
09 68 00.01	CARPET
09 91 00.01	PAINT – SEE SCHEDULE
10 11 16.01	DRY MARKER BOARD
10 11 16.21	DRY ERASE H–BAR SPLICE
10 22 15.11	FIXED GLASS PANEL
10 22 15.12	SLIDING GLASS DOOR
10 44 00.03	FIRE EXTINGUISHER WALL MOUNTED BRACKET
10 44 00.11	FIRE EXTINGUISHER
12 24 00.01	ROLLER SHADE
12 30 00.21	PLASTIC LAMINATE BACKSPLASH – 4 INCH
12 30 00.50	FILLER PIECE SCRIBED TO ADJACENT SURFACE – FINISH TO MATCH CASEWORK
22 00 00.01	SINK – SEE PLUMBING
27 10 00.11	TELEPHONE JACK – SEE TECHNOLOGY – TELEPHONE DEVICE TO BE OWNER FURNISHED AND INSTALLED
27 40 00.01	LCD TV – SEE TECHNOLOGY
27 50 00.11	CLOCK – SEE TECHNOLOGY

GENERAL NOTES:

1. NOT ALL POWER & DATA OUTLET/SWITCHING LOCATIONS SHOWN. CONTRACTOR TO REFER TO ELECTRICAL AND TECHNOLOGY DRAWINGS FOR LOCATIONS.
2. REFER TO DRAWING 2/A7.31 FOR FIRE EXTINGUISHER MOUNTING HEIGHTS.
3. REFER TO 3/A7.31 FOR 101116.01 EDGE DETAILS, TYP.

90% CONSTRUCTION DOCUMENTS

NOT FOR CONSTRUCTION

NORTH ARROW

KEYPLAN

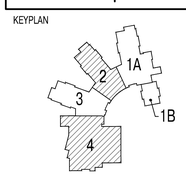

DRAWING NAME:

SPED ACADEMIC CLASSROOMS ENLARGED PLANS & ELEVATIONS

DRAWN BY: JMR/ MJR / ETF
REVIEWED BY: BPH
SCALE: As Noted
JOB NO.: 1403.00
DATE: July 25, 2016
DRAWING NUMBER: A9.94

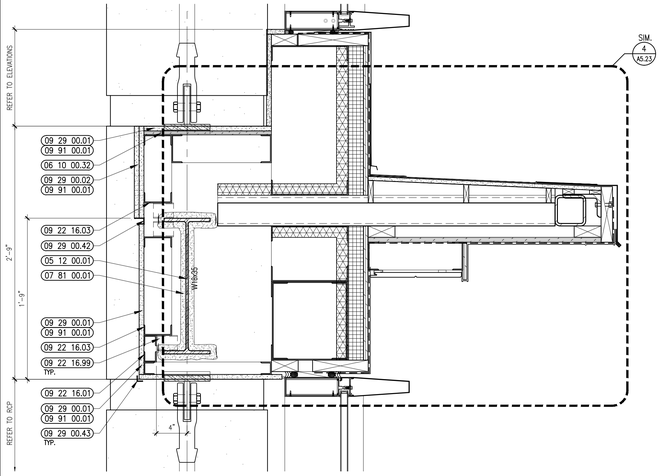

8 SOFFIT DETAIL
1-1/2" = 1'-0"

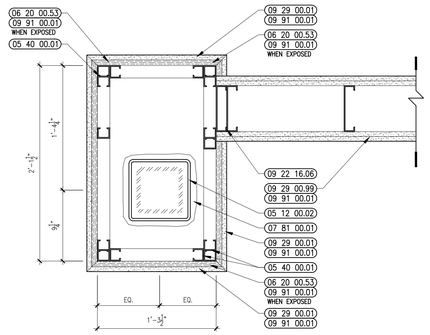

7 SECOND FLOOR PLAN DETAIL
1-1/2" = 1'-0"

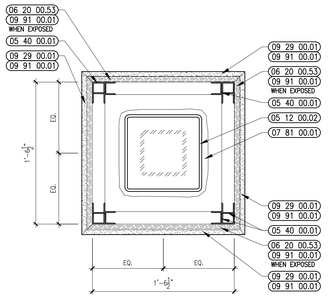

6 SECOND FLOOR PLAN DETAIL
1-1/2" = 1'-0"

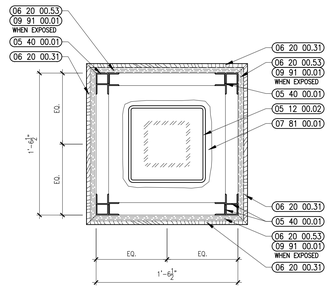

5 FIRST FLOOR PLAN DETAIL
1-1/2" = 1'-0"

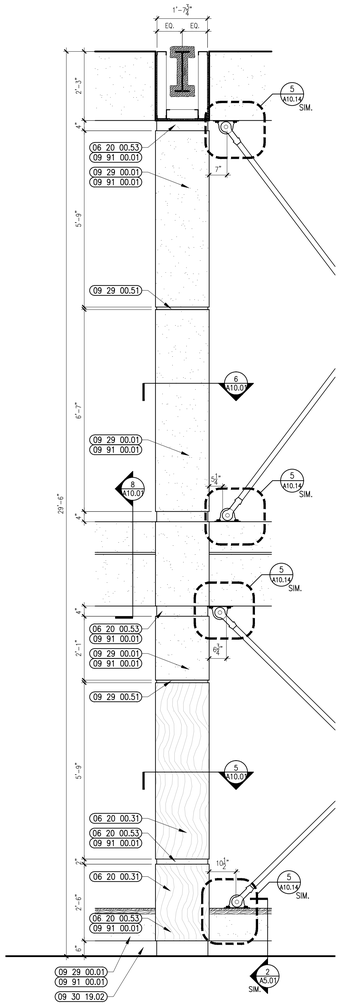

3 MAIN LOBBY COLUMN COVER DETAIL
1/2" = 1'-0"

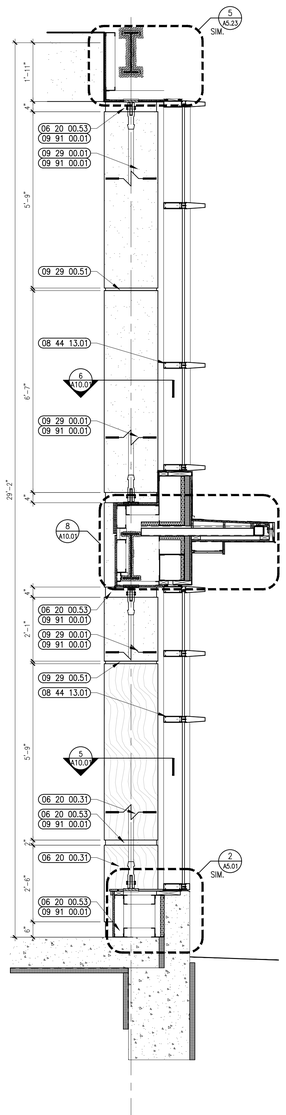

2 MAIN LOBBY COLUMN COVER DETAIL
1/2" = 1'-0"

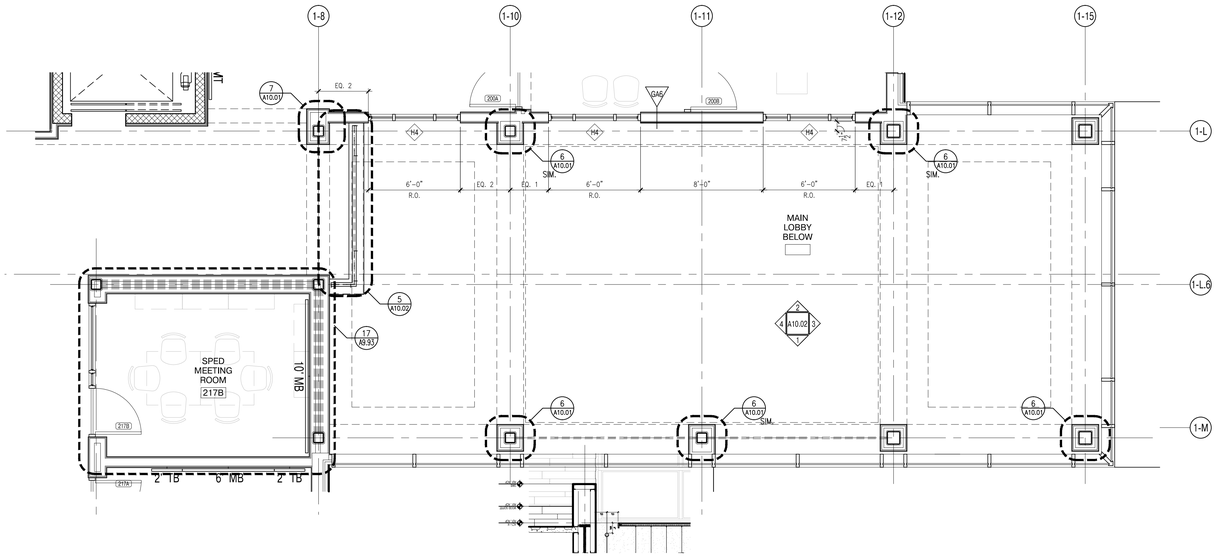

4 MAIN LOBBY SECOND FLOOR ENLARGED PLAN
1/4" = 1'-0"

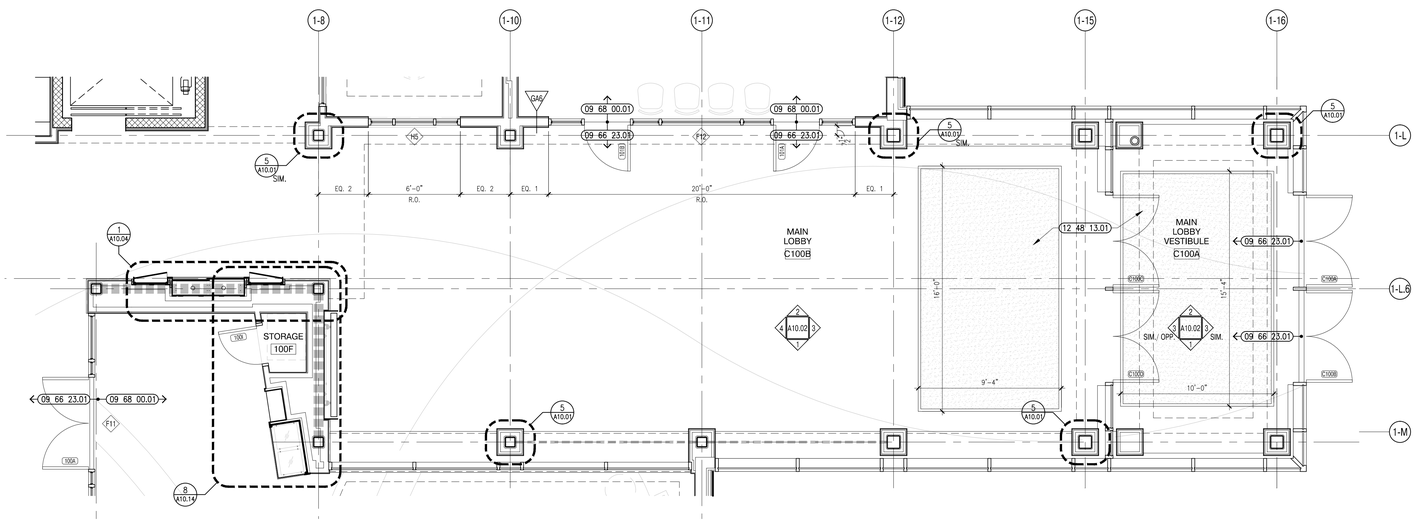

1 MAIN LOBBY FIRST FLOOR ENLARGED PLAN
1/4" = 1'-0"

Ai3 architects
526 Boston Post Rd Wayland, MA
508.358.0790 www.ai3architects.com

BEVERLY MIDDLE SCHOOL

CABOT STREET
BEVERLY, MA 01915

Copyright © 2016 Ai3 Architects, LLC

KEYNOTE LEGEND: (REFERENCE SHEETS A0.01 & A0.02 FOR MASTER KEYNOTE LIST AND KEYNOTES NOT LISTED)

05 12 00.01	STEEL BEAM – SEE STRUCTURAL
05 12 00.02	STEEL COLUMN – SEE STRUCTURAL
05 40 00.01	STEEL STUDS – 1 5/8 INCH – 16 INCHES O.C. MAX
06 10 00.32	PLYWOOD – 1/2 INCH
06 20 00.31	HARDWOOD VENEER PLYWOOD – 1/2 INCH – TRANSPARENT FINISH
06 20 00.53	MDF PLYWOOD – 3/4 INCH
07 81 00.01	CEMENTITIOUS FIREPROOFING
08 44 13.01	ALUMINUM CURTAIN WALL FRAME
09 22 16.01	METAL STUD 1-5/8 INCH – 16 INCHES O.C. MAX
09 22 16.03	METAL STUD 3-5/8 INCH – 16 INCHES O.C. MAX
09 22 16.06	METAL STUD 6 INCH – 16 INCHES O.C. MAX
09 22 16.99	METAL CLIP FOR WALL FRAMING – 16 GA. – 24 INCHES O.C. MAX
09 29 00.01	5/8 INCH GYPSUM BOARD – LEVEL 4 FINISH
09 29 00.02	5/8 INCH GYPSUM BOARD – 2 LAYERS – LEVEL 4 FINISH
09 29 00.42	REVEAL – PAINTABLE 3/4 INCH
09 29 00.43	CORNER BEAD
09 29 00.51	ALUMINUM REVEAL TRIM – SATIN FINISH – 1 INCH
09 29 00.99	GYPSUM BOARD SYSTEM – LEVEL 4 FINISH – REFER TO FLOOR PLANS AND WALL TYPES FOR COMPONENTS
09 30 19.02	PORCELAIN WALL TILE
09 66 23.01	RESINOUS MATRIX TERRAZZO FLOORING
09 68 00.01	CARPET
09 91 00.01	PAINT – SEE SCHEDULE
12 48 13.01	RECESSED ENTRANCE MAT – REFERENCE DRAWINGS FOR SIZE

GENERAL NOTES:

1. NOT ALL POWER AND DATA OUTLET/SWITCHING LOCATIONS SHOWN. COORDINATE WITH ELECTRICAL AND TECHNOLOGY DRAWINGS FOR ALL LOCATIONS.
2. REFER TO DETAIL 2/A7.31 FOR FIRE EXTINGUISHER DETAILS AND MOUNTING HEIGHTS.

90% CONSTRUCTION DOCUMENTS

NOT FOR CONSTRUCTION

NORTH ARROW

KEYPLAN

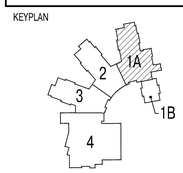

DRAWING NAME:
MAIN LOBBY ENLARGED PLANS

DRAWN BY:	MJR
REVIEWED BY:	BPH
SCALE:	As Noted
JOB NO.:	1403.00
DATE:	July 25, 2016
DRAWING NUMBER:	A10.01

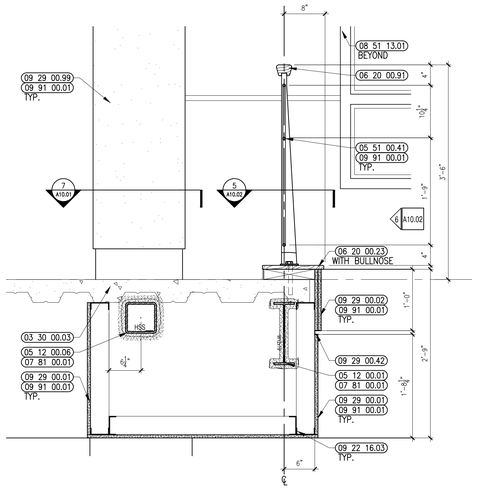

8 MAIN LOBBY RAILING DETAIL
1" = 1'-0"

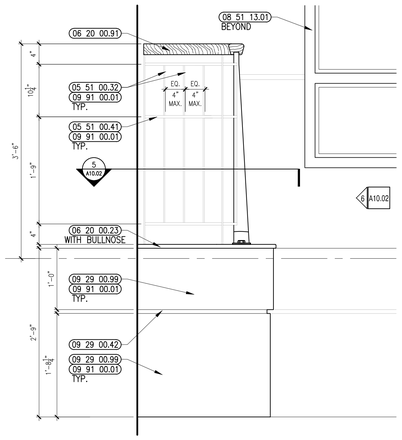

7 MAIN LOBBY RAILING DETAIL
1" = 1'-0"

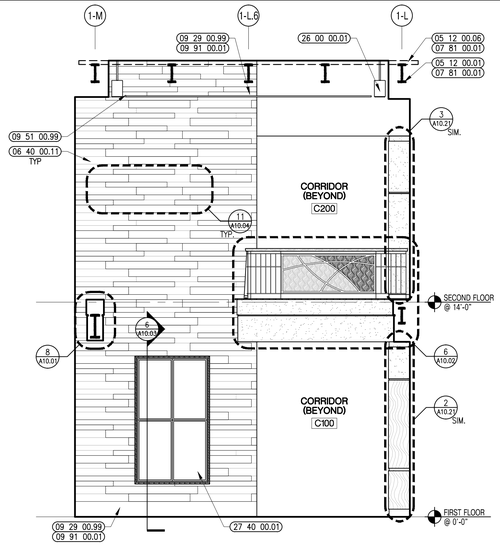

4 MAIN LOBBY INTERIOR ELEVATION
1/4" = 1'-0"

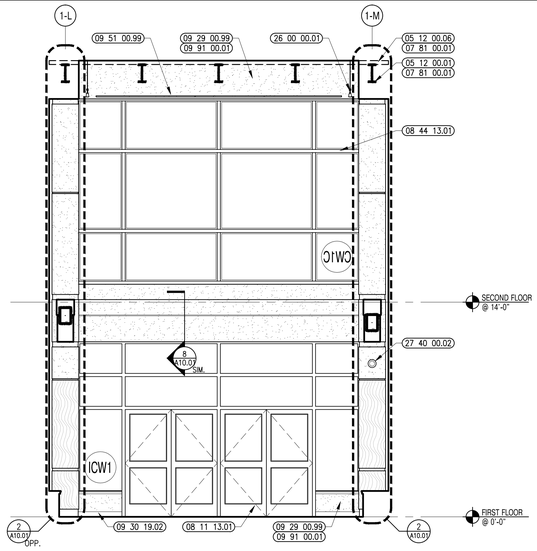

3 MAIN LOBBY INTERIOR ELEVATION
1/4" = 1'-0"

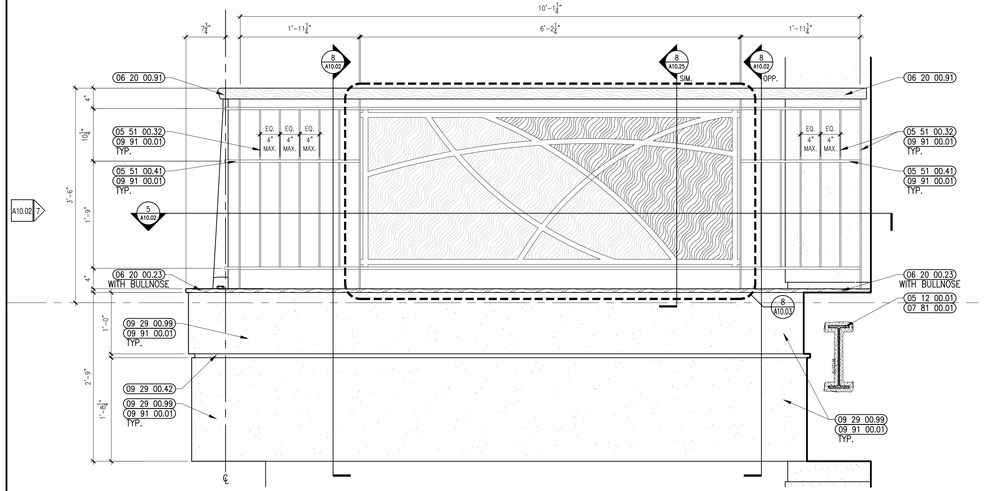

6 MAIN LOBBY RAILING DETAIL
1" = 1'-0"

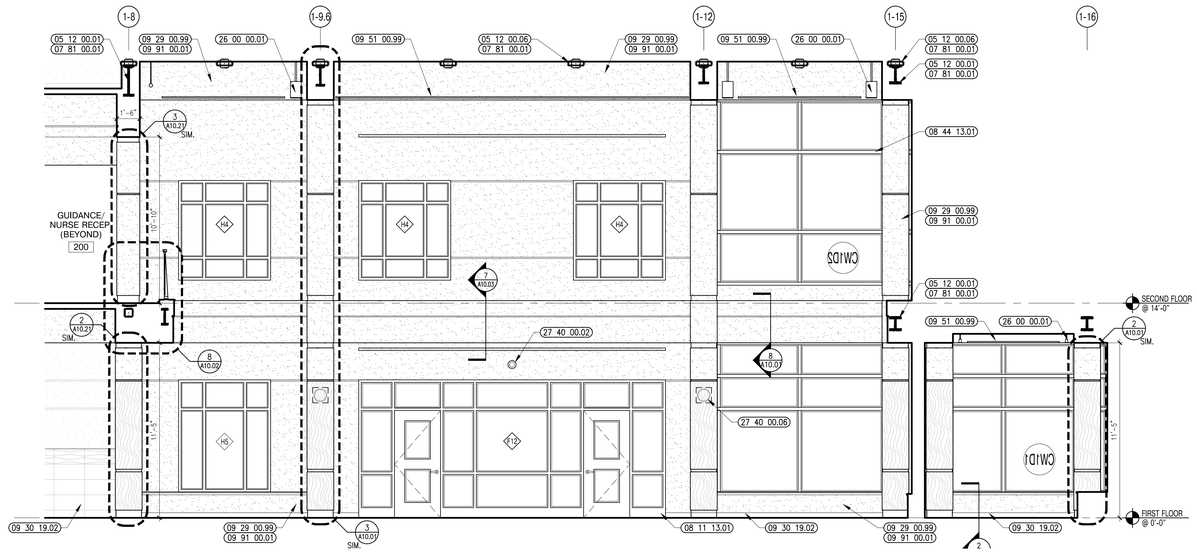

2 MAIN LOBBY INTERIOR ELEVATION
1/4" = 1'-0"

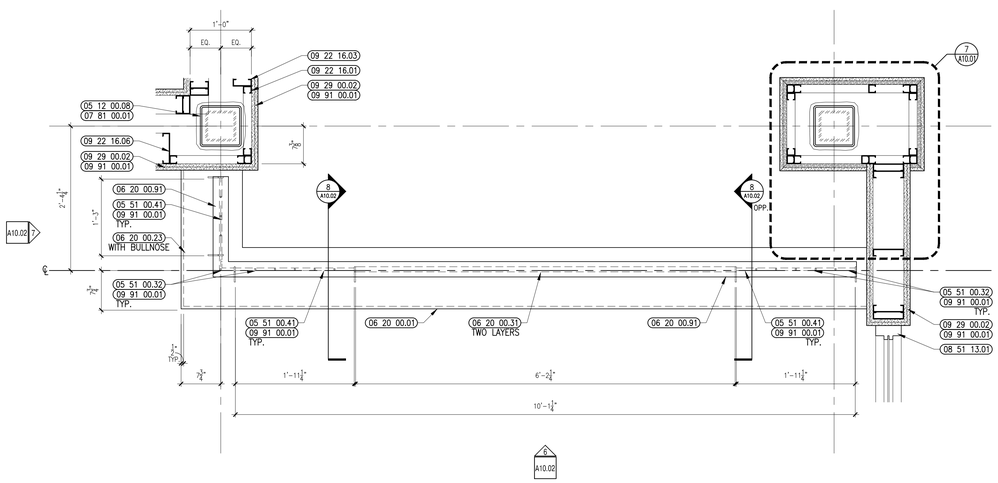

5 MAIN LOBBY RAILING DETAIL
1" = 1'-0"

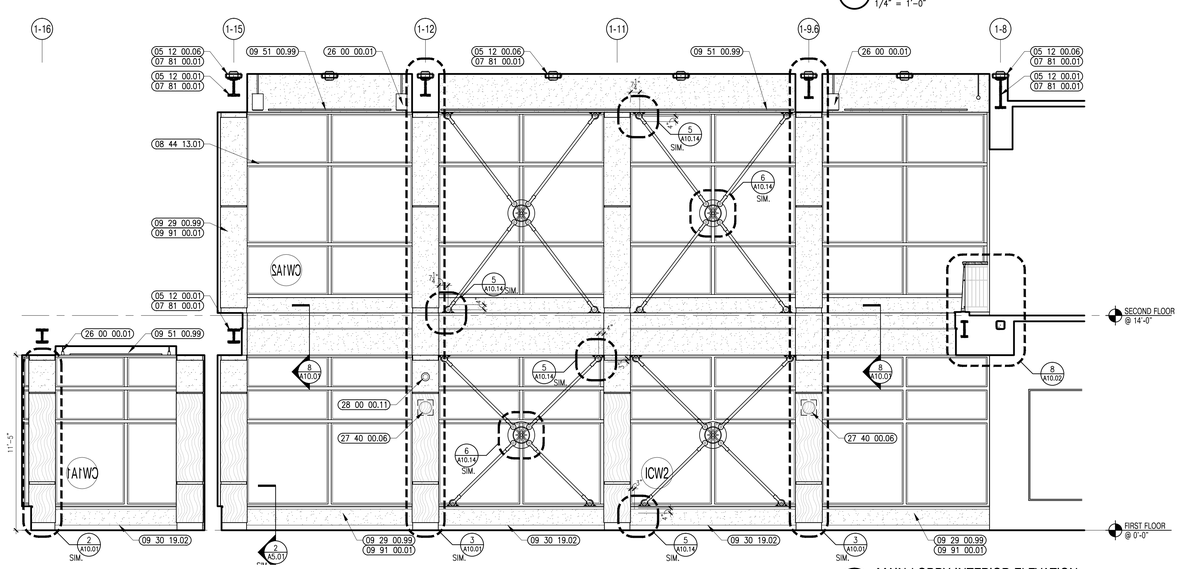

1 MAIN LOBBY INTERIOR ELEVATION
1/4" = 1'-0"

526 Boston Post Rd Wayland, MA
508.358.0790 www.ai3architects.com

BEVERLY MIDDLE SCHOOL

CABOT STREET
BEVERLY, MA 01915

Copyright © 2016 A13 Architects, LLC

KEYNOTE LEGEND: (REFERENCE SHEETS A0.01 & A0.02 FOR MASTER KEYNOTE LIST AND KEYNOTES NOT LISTED)

03 30 00.03	CONCRETE SLAB ON DECK – SEE STRUCTURAL
05 12 00.01	STEEL BEAM – SEE STRUCTURAL
05 12 00.06	STEEL TUBE – SEE STRUCTURAL
05 12 00.08	STEEL TUBE COLUMN – SEE STRUCTURAL
05 51 00.32	STAINLESS STEEL INTERMEDIATE HANDRAIL WITH POSTS ANCHORED TO FLOOR
05 51 00.41	STEEL BAR – 1/2 INCH x 1/2 INCH
06 20 00.01	HARDWOOD MILLWORK – TRANSPARENT FINISH
06 20 00.23	HARDWOOD TRIM – 3/4 INCH – TRANSPARENT FINISH
06 20 00.31	HARDWOOD VENEER PLYWOOD – 1/2 INCH – TRANSPARENT FINISH
06 20 00.91	HARDWOOD HANDRAIL – TRANSPARENT FINISH
06 40 00.11	3D WOOD WALL PANELS – MAPLE
07 81 00.01	CEMENTITIOUS FIREPROOFING
08 11 13.01	DOOR AND FRAME– SEE DOOR SCHEDULE
08 44 13.01	ALUMINUM CURTAIN WALL FRAME
08 51 13.01	ALUMINUM WINDOW – SEE SCHEDULE
09 22 16.01	METAL STUD 1–5/8 INCH – 16 INCHES O.C. MAX
09 22 16.03	METAL STUD 3–5/8 INCH – 16 INCHES O.C. MAX
09 22 16.06	METAL STUD 6 INCH – 16 INCHES O.C. MAX
09 29 00.01	5/8 INCH GYPSUM BOARD – LEVEL 4 FINISH
09 29 00.02	5/8 INCH GYPSUM BOARD – 2 LAYERS – LEVEL 4 FINISH
09 29 00.42	REVEAL – PAINTABLE 3/4 INCH
09 29 00.99	GYPSUM BOARD SYSTEM – LEVEL 4 FINISH – REFER TO FLOOR PLANS AND WALL TYPES FOR COMPONENTS
09 30 19.02	PORCELAIN WALL TILE
09 51 00.99	ACOUSTICAL CEILING – REFERENCE REFLECTED CEILING PLANS FOR TYPE AND HEIGHT
09 91 00.01	PAINT – SEE SCHEDULE
26 00 00.01	LIGHT FIXTURE – SEE ELECTRICAL
27 40 00.01	LCD TV – SEE TECHNOLOGY
27 40 00.02	CAMERA – SEE TECHNOLOGY
27 40 00.06	SPEAKER – SEE TECHNOLOGY – LOCAL SOUND SYSTEM
28 00 00.11	MOTION SENSOR – SEE TECHNOLOGY

GENERAL NOTES:

1. NOT ALL POWER AND DATA OUTLET/SWITCHING LOCATIONS SHOWN. COORDINATE WITH ELECTRICAL AND TECHNOLOGY DRAWINGS FOR ALL LOCATIONS.
2. REFER TO DETAIL 2/A7.31 FOR FIRE EXTINGUISHER DETAILS AND MOUNTING HEIGHTS.

90% CONSTRUCTION DOCUMENTS

NOT FOR CONSTRUCTION

NORTH ARROW

KEYPLAN

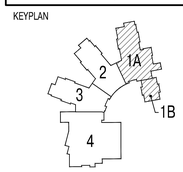

DRAWING NAME:

MAIN LOBBY INTERIOR ELEVATIONS

DRAWN BY:	MJR
REVIEWED BY:	BPH
SCALE:	As Noted
JOB NO.:	1403.00
DATE:	July 25, 2016
DRAWING NUMBER:	A10.02

RADII DIMENSIONS ARE TAKEN FROM THIER RESPECTIVE CENTERLINES

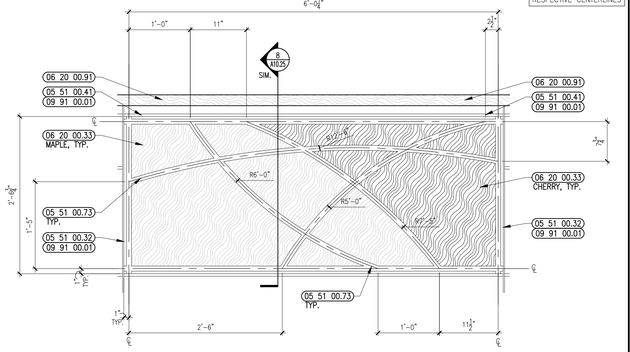

8 MAIN LOBBY RAILING DETAIL
1" = 1'-0"

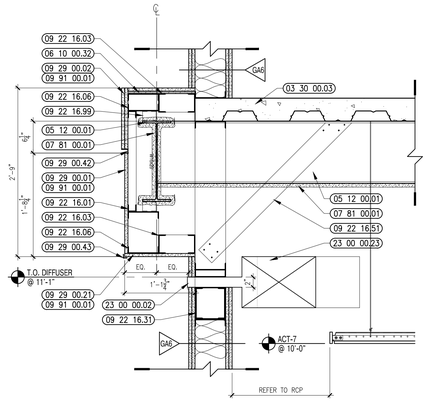

7 MAIN LOBBY SOFFIT DETAIL
1" = 1'-0"

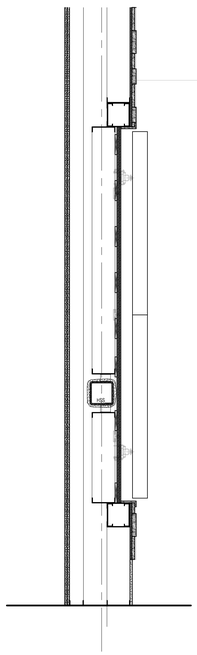

6 MAIN LOBBY DISPLAY DETAIL
3/4" = 1'-0"

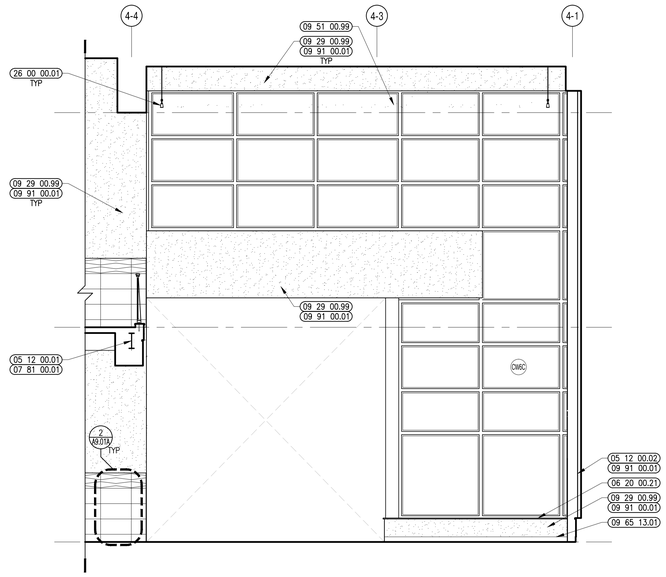

4 LOWER LOBBY INTERIOR ELEVATION
1/4" = 1'-0"

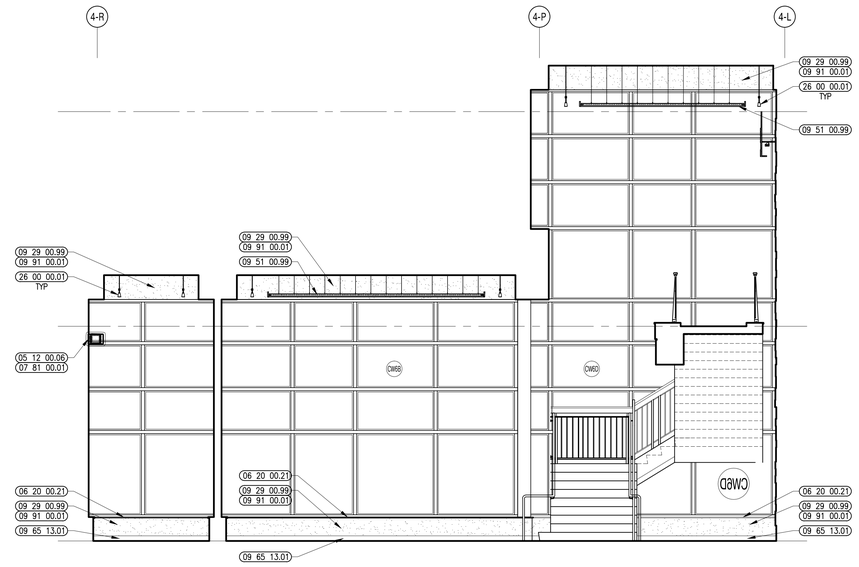

3 LOWER LOBBY INTERIOR ELEVATION
1/4" = 1'-0"

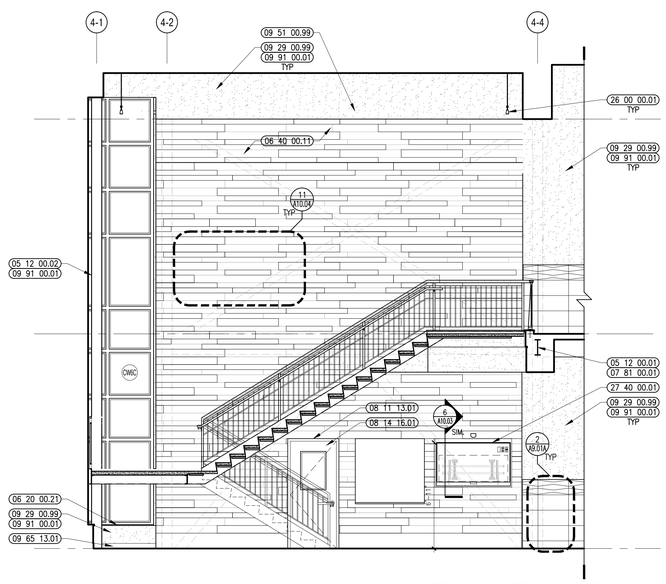

2 LOWER LOBBY INTERIOR ELEVATION
1/4" = 1'-0"

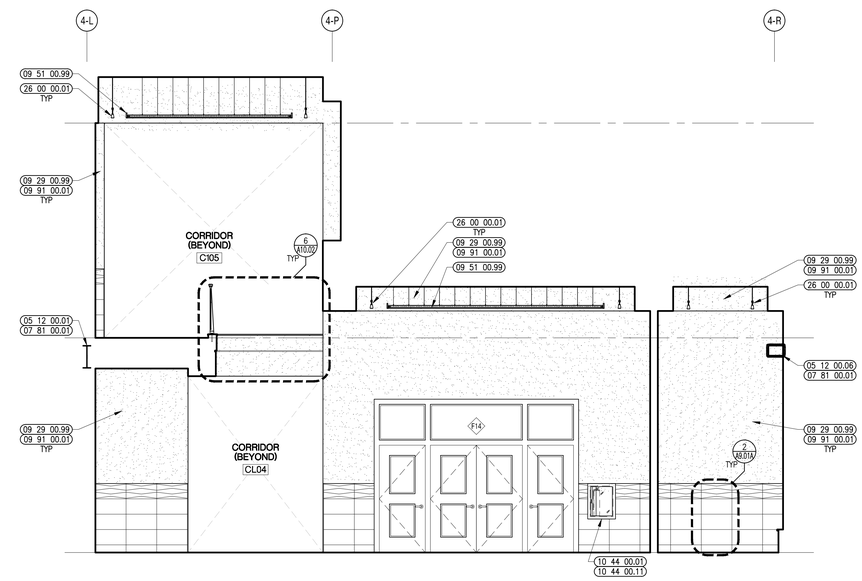

1 LOWER LOBBY INTERIOR ELEVATION
1/4" = 1'-0"

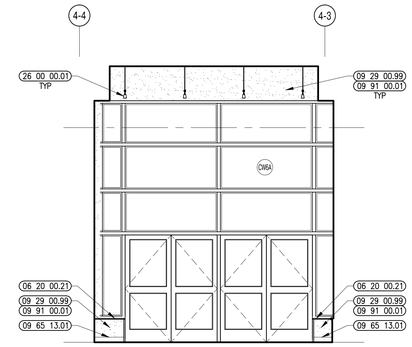

5 LOWER LOBBY INTERIOR ELEVATION
1/4" = 1'-0"

A13 architects
526 Boston Post Rd Wayland, MA
508.358.0790 www.a13architects.com

BEVERLY MIDDLE SCHOOL

CABOT STREET
BEVERLY, MA 01915

Copyright © 2016 A13 Architects, LLC

KEYNOTE LEGEND: (REFERENCE SHEETS A0.01 & A0.02 FOR MASTER KEYNOTE LIST AND KEYNOTES NOT LISTED)

03 30 00.03	CONCRETE SLAB ON DECK – SEE STRUCTURAL
05 12 00.01	STEEL BEAM – SEE STRUCTURAL
05 12 00.02	STEEL COLUMN – SEE STRUCTURAL
05 12 00.06	STEEL TUBE – SEE STRUCTURAL
05 51 00.32	STAINLESS STEEL INTERMEDIATE HANDRAIL WITH POSTS ANCHORED TO FLOOR
05 51 00.41	STEEL BAR – 1/2 INCH x 1/2 INCH
05 51 00.73	METAL PANEL U-EDGING TRIM – 1 INCH – STAINLESS FINISH
06 10 00.32	PLYWOOD – 1/2 INCH
06 20 00.21	HARDWOOD TRIM – 1/2 INCH – TRANSPARENT FINISH
06 20 00.33	HARDWOOD VENEER PLYWOOD – 3/4 INCH – TRANSPARENT FINISH
06 20 00.91	HARDWOOD HANDRAIL – TRANSPARENT FINISH
06 40 00.11	3D WOOD WALL PANELS – MAPLE
07 81 00.01	CEMENTITIOUS FIREPROOFING
08 11 13.01	DOOR AND FRAME– SEE DOOR SCHEDULE
08 14 16.01	SOLID CORE FLUSH WOOD DOOR– SEE DOOR SCHEDULE
09 22 16.01	METAL STUD 1-5/8 INCH – 16 INCHES O.C. MAX
09 22 16.03	METAL STUD 3-5/8 INCH – 16 INCHES O.C. MAX
09 22 16.06	METAL STUD 6 INCH – 16 INCHES O.C. MAX
09 22 16.31	BOXED HEADER
09 22 16.51	METAL STUD BRACE
09 22 16.99	METAL CLIP FOR WALL FRAMING – 16 GA. – 24 INCHES O.C. MAX
09 29 00.01	5/8 INCH GYPSUM BOARD – LEVEL 4 FINISH
09 29 00.02	5/8 INCH GYPSUM BOARD – 2 LAYERS – LEVEL 4 FINISH
09 29 00.21	5/8 INCH GYPSUM BOARD – SAG-RESISTANT – LEVEL 4 FINISH
09 29 00.42	REVEAL – PAINTABLE 3/4 INCH
09 29 00.43	CORNER BEAD
09 29 00.99	GYPSUM BOARD SYSTEM – LEVEL 4 FINISH – REFER TO FLOOR PLANS AND WALL TYPES FOR COMPONENTS
09 51 00.99	ACOUSTICAL CEILING – REFERENCE REFLECTED CEILING PLANS FOR TYPE AND HEIGHT
09 65 13.01	RUBBER BASE – 4"
09 91 00.01	PAINT – SEE SCHEDULE
10 44 00.01	FIRE EXTINGUISHER CABINET – FULLY RECESSED
10 44 00.11	FIRE EXTINGUISHER
23 00 00.02	DIFFUSER – SEE HVAC
23 00 00.23	DUCT – SEE HVAC
26 00 00.01	LIGHT FIXTURE – SEE ELECTRICAL
27 40 00.01	LCD TV – SEE TECHNOLOGY

GENERAL NOTES:

1. NOT ALL POWER AND DATA OUTLET/SWITCHING LOCATIONS SHOWN. COORDINATE WITH ELECTRICAL AND TECHNOLOGY DRAWINGS FOR ALL LOCATIONS.
2. REFER TO DETAIL 2/A7.31 FOR FIRE EXTINGUISHER DETAILS AND MOUNTING HEIGHTS.

90% CONSTRUCTION DOCUMENTS

NOT FOR CONSTRUCTION

NORTH ARROW

KEYPLAN

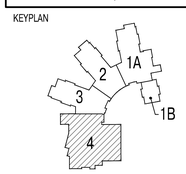

DRAWING NAME:

LOWER LOBBY INTERIOR ELEVATIONS

DRAWN BY:	MJR / JMR
REVIEWED BY:	BPH
SCALE:	As Noted
JOB NO.:	1403.00
DATE:	July 25, 2016
DRAWING NUMBER:	A10.03

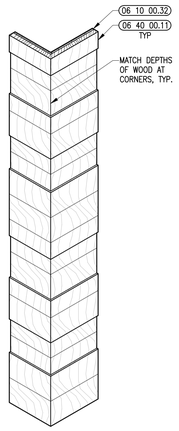

13 TEXTURED WOOD WALL CORNER DIAGRAM
N.T.S.

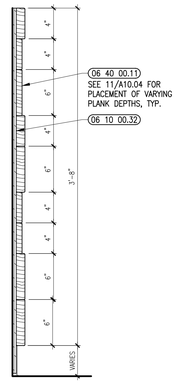

12 TEXTURED WOOD WALL SECTION
1 1/2" = 1'-0"

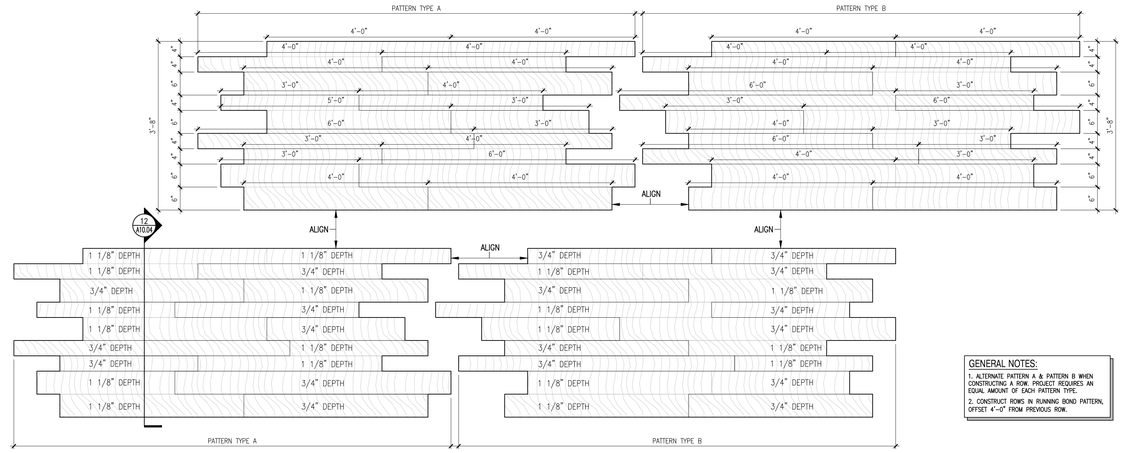

11 TEXTURED WOOD WALL
3/4" = 1'-0"
TYP.

GENERAL NOTES:
1. ALTERNATE PATTERN A & PATTERN B WHEN CONSTRUCTING A ROW. PROJECT REQUIRES AN EQUAL AMOUNT OF EACH PATTERN TYPE.
2. CONSTRUCT ROWS IN RUNNING BOND PATTERN, OFFSET 4'-0" FROM PREVIOUS ROW.

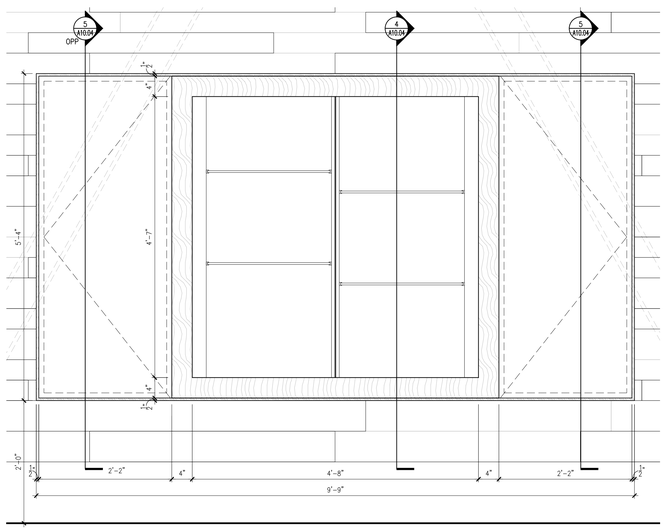

8 DISPLAY CASE ELEVATION
1" = 1'-0"

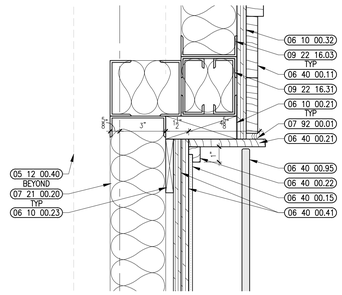

10 DISPLAY CASE DETAIL
3" = 1'-0"

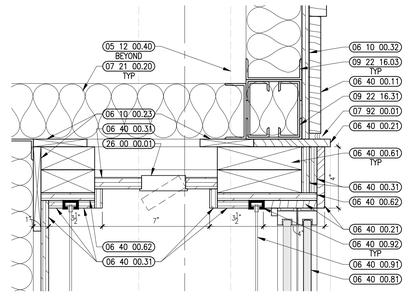

9 DISPLAY CASE DETAIL
3" = 1'-0"

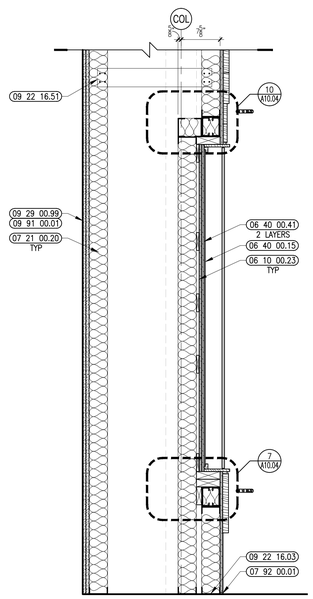

5 DISPLAY CASE SECTION
1" = 1'-0"

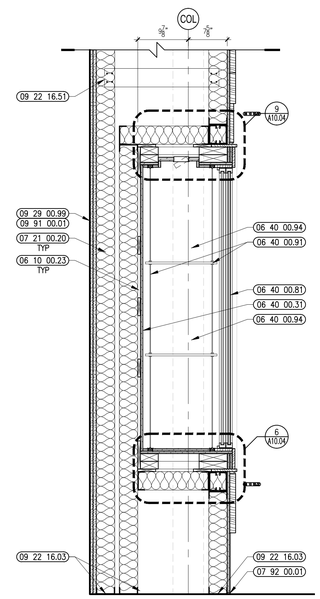

4 DISPLAY CASE SECTION
1" = 1'-0"

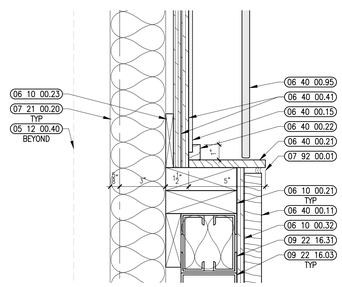

7 DISPLAY CASE DETAIL
3" = 1'-0"

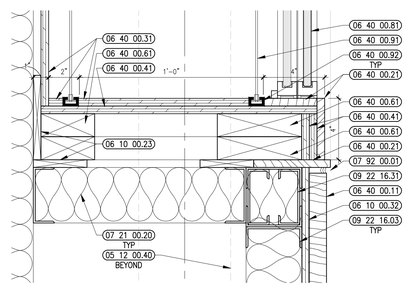

6 DISPLAY CASE DETAIL
3" = 1'-0"

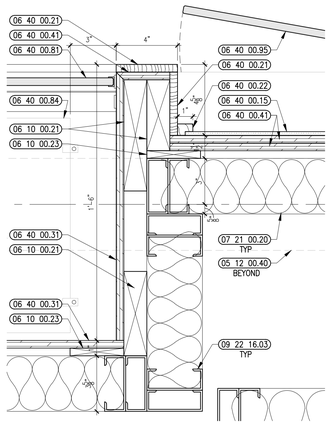

3 DISPLAY CASE PLAN DETAIL
3" = 1'-0"

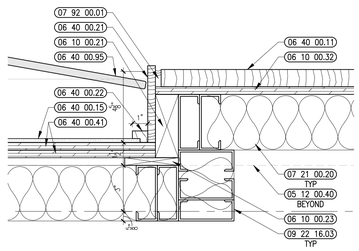

2 DISPLAY CASE PLAN DETAIL
3" = 1'-0"

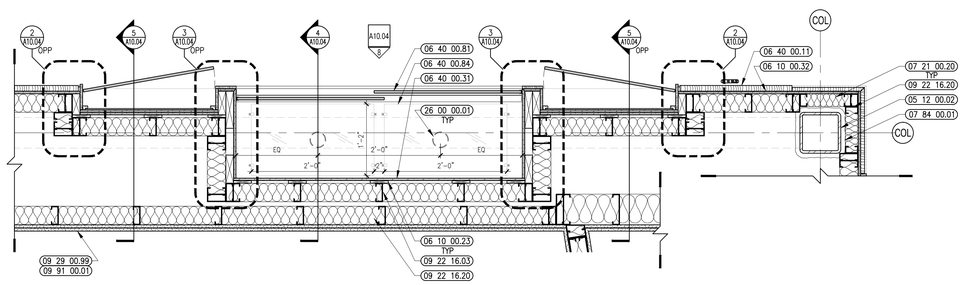

1 DISPLAY CASE ENLARGED PLAN
1" = 1'-0"

A13 architects
526 Boston Post Rd Wayland, MA
508.358.0790 www.a13architects.com

BEVERLY MIDDLE SCHOOL

CABOT STREET
BEVERLY, MA 01915

Copyright © 2016 A13 Architects, LLC

KEYNOTE LEGEND: (REFERENCE SHEETS A0.01 & A0.02 FOR MASTER KEYNOTE LIST AND KEYNOTES NOT LISTED)

05 12 00.02	STEEL COLUMN – SEE STRUCTURAL
05 12 00.40	BRACE FRAME – SEE STRUCTURAL
06 10 00.21	WOOD BLOCKING – 2X FIRE RETARDANT TREATED – SIZE AS NOTED OR DRAWN
06 10 00.23	WOOD BLOCKING – FIRE RETARDANT TREATED – SIZE AS NOTED OR DRAWN
06 10 00.32	PLYWOOD – 1/2 INCH
06 40 00.11	3D WOOD WALL PANELS – MAPLE
06 40 00.15	TACKABLE SURFACE
06 40 00.21	HARDWOOD TRIM – 1/2 INCH – TRANSPARENT FINISH
06 40 00.22	HARDWOOD TRIM – 3/4 INCH – TRANSPARENT FINISH
06 40 00.31	HARDWOOD VENEER PLYWOOD – 1/2 INCH – TRANSPARENT FINISH
06 40 00.41	PLYWOOD – 1/2 INCH
06 40 00.61	WOOD BLOCKING – 2X
06 40 00.62	WOOD BLOCKING – SIZE AS REQUIRED
06 40 00.81	SLIDING GLASS DOORS – SET IN ALUMINUM TRACKS – PROVIDE LOCKS
06 40 00.84	GLASS SHELVING AND BRACKETS
06 40 00.91	CABLE – 1/8 INCH THICK WITH TENSIONER
06 40 00.92	CABLE FIXING – FLOOR TO CEILING MOUNT
06 40 00.94	GLASS SHELF – 14 INCH X 24 INCH X 3/8 INCH TEMPERED GLASS SHELF
06 40 00.95	GLASS DOOR WITH PIVOT HINGE – 2'-2"W X 5'-3"H
07 21 00.20	GLASS FIBER INSULATION
07 84 00.01	FIRE SAFING MINERAL WOOL
07 92 00.01	JOINT SEALANT – TYPE AS REQUIRED
09 22 16.03	METAL STUD 3-5/8 INCH – 16 INCHES O.C. MAX
09 22 16.20	METAL STUD – REFER TO FLOOR PLANS FOR DEPTH
09 22 16.31	BOXED HEADER
09 22 16.51	METAL STUD BRACE
09 29 00.99	GYPSUM BOARD SYSTEM – LEVEL 4 FINISH – REFER TO FLOOR PLANS AND WALL TYPES FOR COMPONENTS
09 91 00.01	PAINT – SEE SCHEDULE
26 00 00.01	LIGHT FIXTURE – SEE ELECTRICAL

90% CONSTRUCTION DOCUMENTS

NOT FOR CONSTRUCTION

NORTH ARROW

KEYPLAN

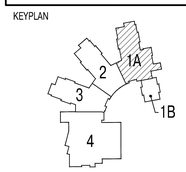

DRAWING NAME:

MAIN LOBBY WOODWORK DETAILS

DRAWN BY:	JMR
REVIEWED BY:	BPH
SCALE:	As Noted
JOB NO.:	1403.00
DATE:	July 25, 2016
DRAWING NUMBER:	A10.04

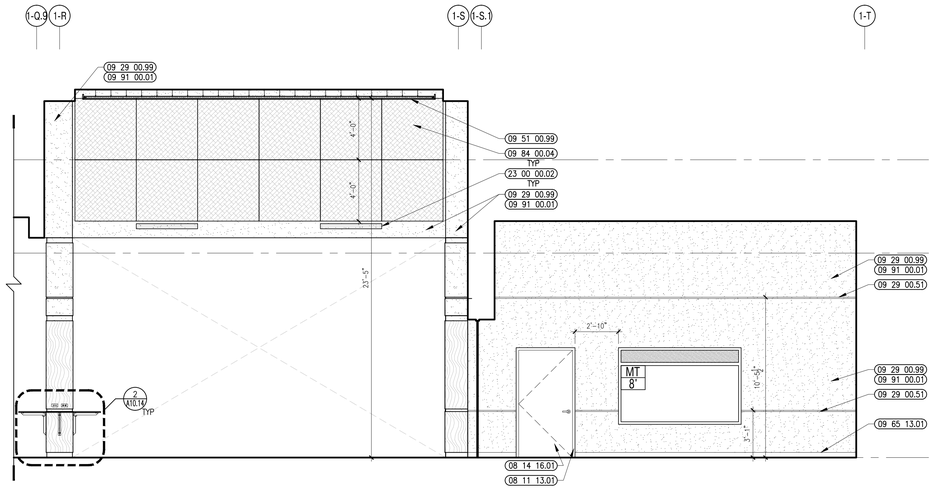

6 MEDIA CENTER & QUIET AREA INTERIOR ELEVATION
1/4" = 1'-0"

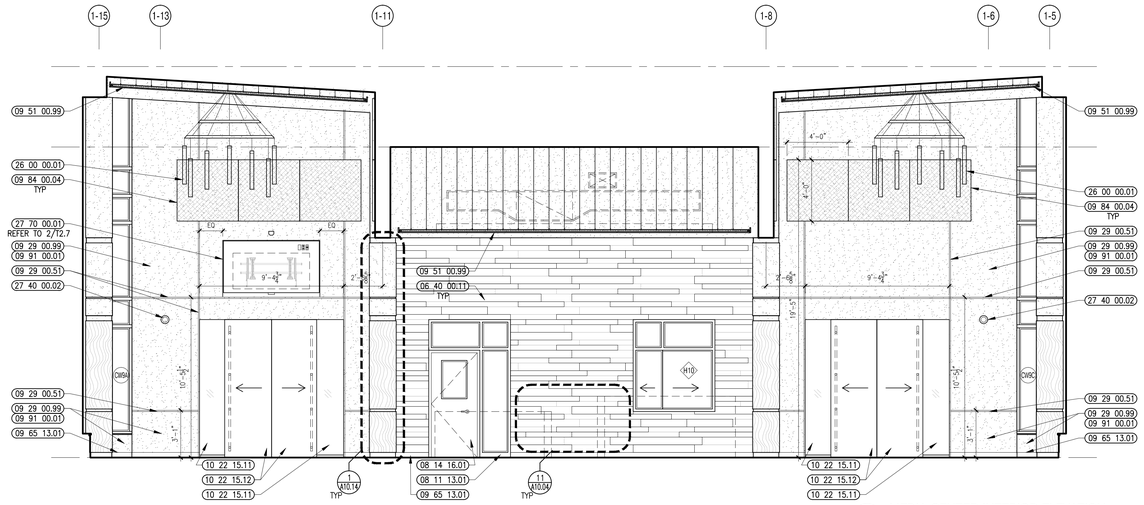

5 MEDIA CENTER INTERIOR ELEVATION
1/4" = 1'-0"

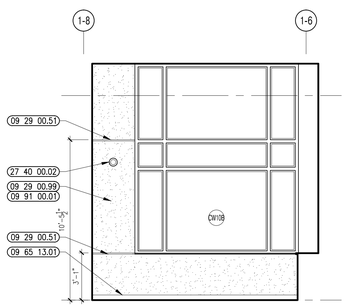

4 QUIET AREA INTERIOR ELEVATION
1/4" = 1'-0"

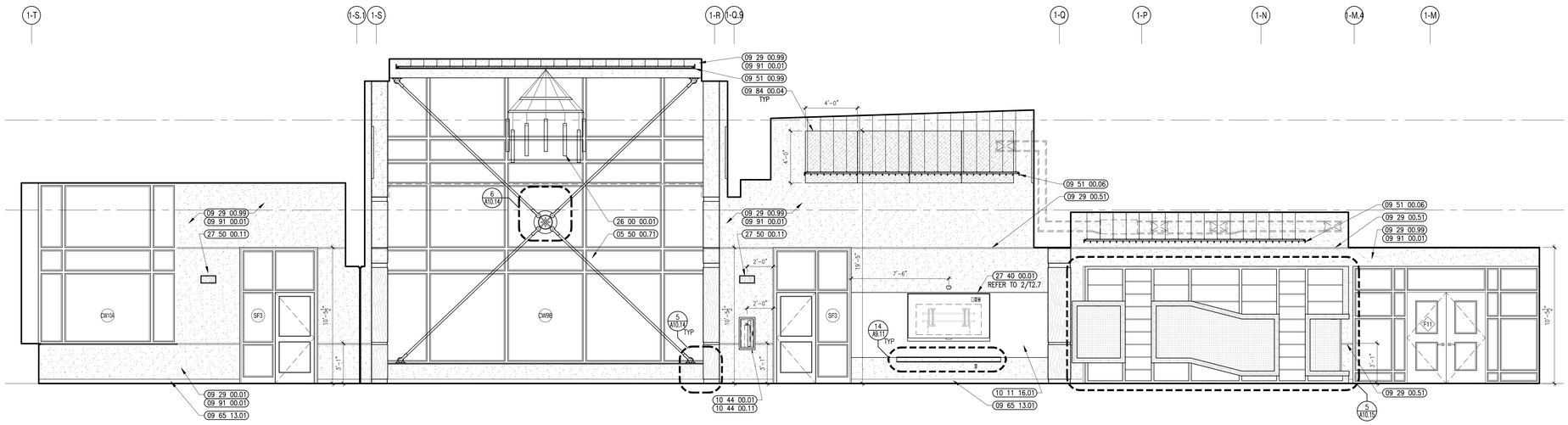

3 MEDIA CENTER INTERIOR ELEVATION
1/4" = 1'-0"

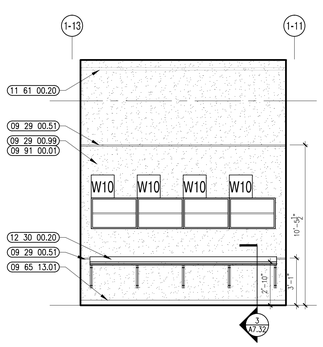

2 MULTIMEDIA MAKERSPACE EDITING ELEVATION
1/4" = 1'-0"

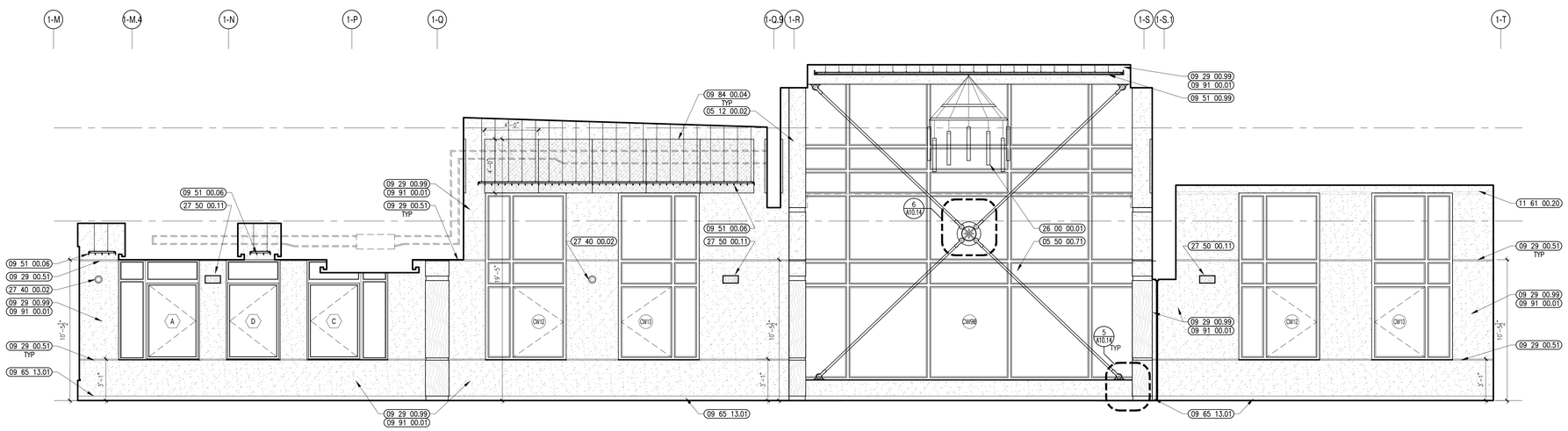

1 MEDIA CENTER INTERIOR ELEVATION
1/4" = 1'-0"

A13 architects
526 Boston Post Rd Wayland, MA
508.358.0790 www.a13architects.com

BEVERLY MIDDLE SCHOOL

CABOT STREET
BEVERLY, MA 01915

Copyright © 2016 A13 Architects, LLC

KEYNOTE LEGEND: (REFERENCE SHEETS A0.01 & A0.02 FOR MASTER KEYNOTE LIST AND KEYNOTES NOT LISTED)

05 12 00.02	STEEL COLUMN – SEE STRUCTURAL
05 50 00.71	STEEL ROD – 2 INCH DIAMETER – SEE STRUCTURAL
06 40 00.11	3D WOOD WALL PANELS – MAPLE
08 11 13.01	DOOR AND FRAME– SEE DOOR SCHEDULE
08 14 16.01	SOLID CORE FLUSH WOOD DOOR– SEE DOOR SCHEDULE
09 29 00.01	5/8 INCH GYPSUM BOARD – LEVEL 4 FINISH
09 29 00.51	ALUMINUM REVEAL TRIM – SATIN FINISH – 1 INCH
09 29 00.99	GYPSUM BOARD SYSTEM – LEVEL 4 FINISH – REFER TO FLOOR PLANS AND WALL TYPES FOR COMPONENTS
09 51 00.06	ACT TYPE–6
09 51 00.99	ACOUSTICAL CEILING – REFERENCE REFLECTED CEILING PLANS FOR TYPE AND HEIGHT
09 65 13.01	RUBBER BASE – 4"
09 84 00.04	ACOUSTICAL PANEL – WALL MOUNTED – TYPE 4
09 91 00.01	PAINT – SEE SCHEDULE
10 11 16.01	DRY MARKER BOARD
10 22 15.11	FIXED GLASS PANEL
10 22 15.12	SLIDING GLASS DOOR
11 61 00.20	PIPE GRID
12 30 00.20	PLASTIC LAMINATE COUNTERTOP
23 00 00.02	DIFFUSER – SEE HVAC
26 00 00.01	LIGHT FIXTURE – SEE ELECTRICAL
27 40 00.01	LCD TV – SEE TECHNOLOGY
27 40 00.02	CAMERA – SEE TECHNOLOGY
27 50 00.11	CLOCK – SEE TECHNOLOGY
27 70 00.01	TV – FLAT SCREEN – SEE TECHNOLOGY

GENERAL NOTES:

1. NOT ALL POWER & DATA OUTLET/SWITCHING LOCATIONS SHOWN. CONTRACTOR TO REFER TO ELECTRICAL AND TECHNOLOGY DRAWINGS FOR LOCATIONS.
2. REFER TO DRAWING 2/A7.31 FOR FIRE EXTINGUISHER MOUNTING HEIGHTS.
3. REFER TO 3/A7.31 FOR 101116.01 EDGE DETAILS, TYP.

90% CONSTRUCTION DOCUMENTS

NOT FOR CONSTRUCTION

NORTH ARROW

KEYPLAN

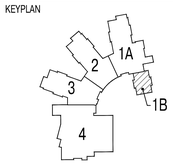

DRAWING NAME:

MEDIA CENTER INTERIOR ELEVATIONS

DRAWN BY:	JMR
REVIEWED BY:	BPH
SCALE:	As Noted
JOB NO.:	1403.00
DATE:	July 25, 2016
DRAWING NUMBER:	A10.11

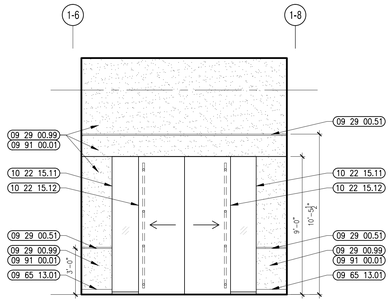

12 QUIET AREA INTERIOR ELEVATION
1/4" = 1'-0"

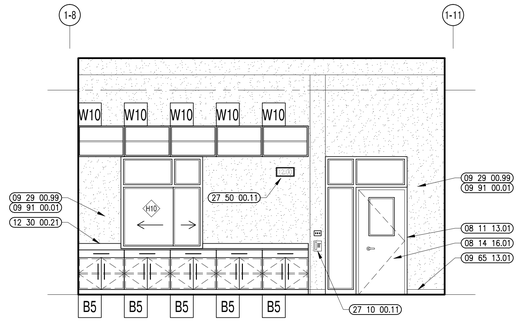

11 LIBRARY/TECH WORKROOM INTERIOR ELEVATION
1/4" = 1'-0"

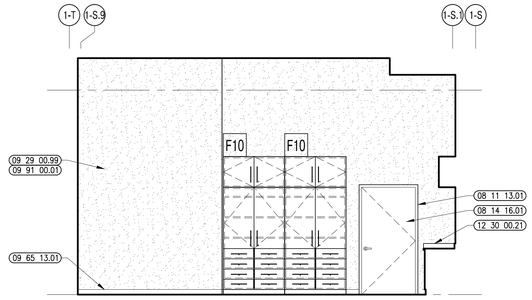

10 LIBRARY/TECH WORKROOM INTERIOR ELEVATION
1/4" = 1'-0"

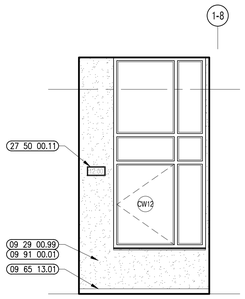

9 TECH OFFICE INTERIOR ELEVATION
1/4" = 1'-0"

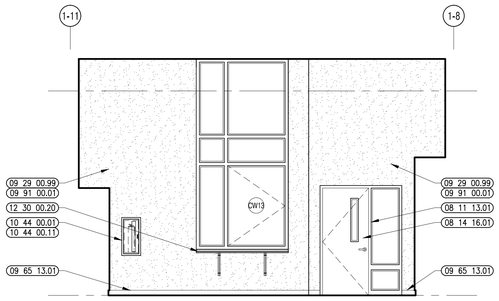

8 LIBRARY/TECH WORKROOM INTERIOR ELEVATION
1/4" = 1'-0"

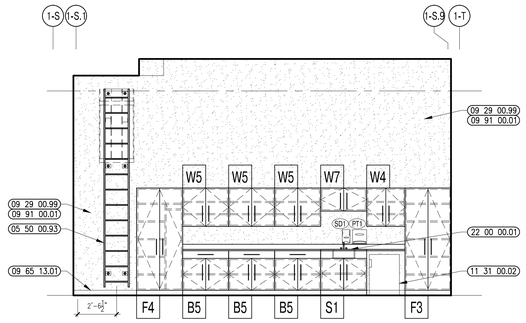

7 LIBRARY/TECH WORKROOM INTERIOR ELEVATION
1/4" = 1'-0"

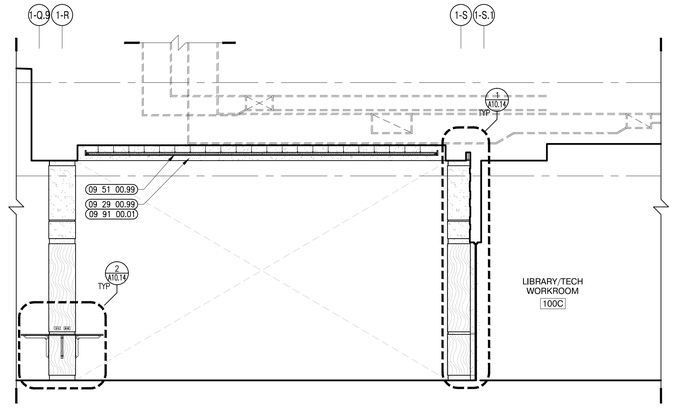

6 MEDIA CENTER INTERIOR ELEVATION
1/4" = 1'-0"

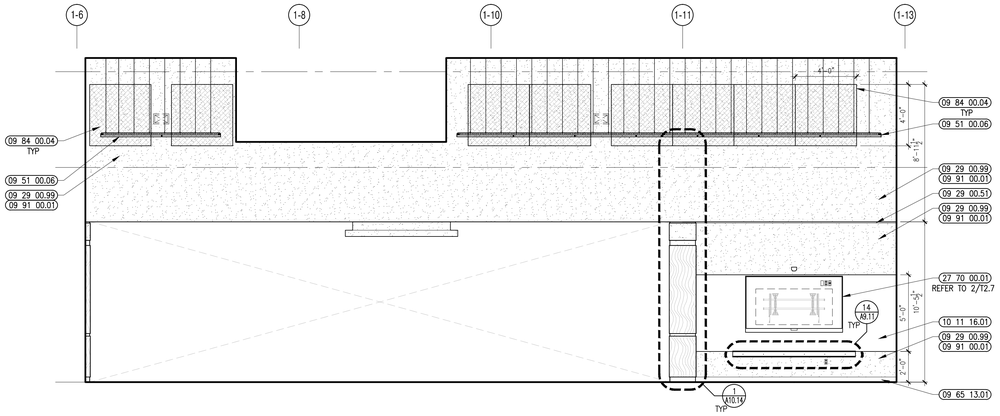

5 MEDIA CENTER INTERIOR ELEVATION
1/4" = 1'-0"

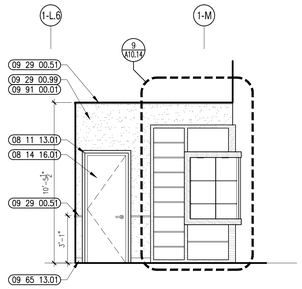

4 MEDIA CENTER INTERIOR ELEVATION
1/4" = 1'-0"

3 MEDIA CENTER INTERIOR ELEVATION
1/4" = 1'-0"

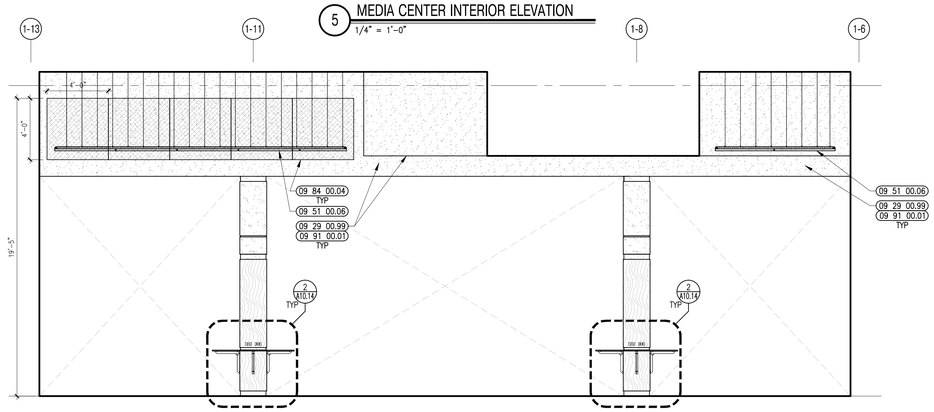

2 MEDIA CENTER INTERIOR ELEVATION
1/4" = 1'-0"

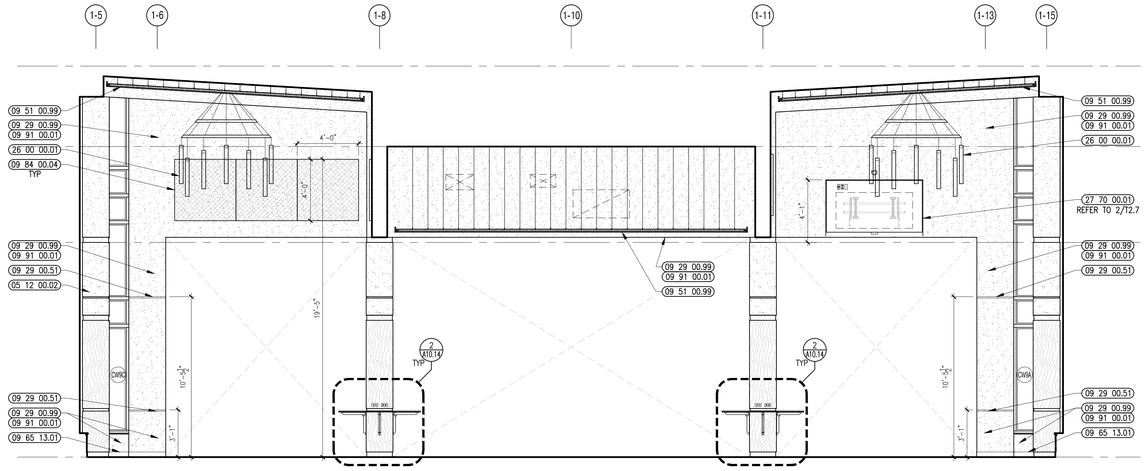

1 MEDIA CENTER INTERIOR ELEVATION
1/4" = 1'-0"

A13 architects
526 Boston Post Rd Wayland, MA
508.358.0790 www.a13architects.com

BEVERLY MIDDLE SCHOOL

CABOT STREET
BEVERLY, MA 01915

Copyright © 2016 A13 Architects, LLC

KEYNOTE LEGEND: (REFERENCE SHEETS A0.01 & A0.02 FOR MASTER KEYNOTE LIST AND KEYNOTES NOT LISTED)

05 12 00.02	STEEL COLUMN – SEE STRUCTURAL
05 40 00.01	STEEL STUDS – 1 5/8 INCH – 16 INCHES O.C. MAX
05 50 00.93	ROOF ACCESS LADDER – INTERIOR
06 20 00.31	HARDWOOD VENEER PLYWOOD – 1/2 INCH – TRANSPARENT FINISH
06 20 00.80	STEEL UNDER COUNTER SUPPORT BRACKET – SIZE AS NOTED OR DRAWN
06 20 00.86	WIRE MANAGEMENT HOOKS ?12 INCHES O.C. ?UNDER COUNTER
06 55 00.01	SOLID SURFACE MATERIAL
07 81 00.01	CEMENTITIOUS FIREPROOFING
08 11 13.01	DOOR AND FRAME– SEE DOOR SCHEDULE
08 14 16.01	SOLID CORE FLUSH WOOD DOOR– SEE DOOR SCHEDULE
09 29 00.01	5/8 INCH GYPSUM BOARD – LEVEL 4 FINISH
09 29 00.51	ALUMINUM REVEAL TRIM – SATIN FINISH – 1 INCH
09 29 00.99	GYPSUM BOARD SYSTEM – LEVEL 4 FINISH – REFER TO FLOOR PLANS AND WALL TYPES FOR COMPONENTS
09 51 00.06	ACT TYPE–6
09 51 00.99	ACOUSTICAL CEILING – REFERENCE REFLECTED CEILING PLANS FOR TYPE AND HEIGHT
09 65 13.01	RUBBER BASE – 4"
09 84 00.04	ACOUSTICAL PANEL – WALL MOUNTED – TYPE 4
09 91 00.01	PAINT – SEE SCHEDULE
10 22 15.11	FIXED GLASS PANEL
10 22 15.12	SLIDING GLASS DOOR
10 44 00.01	FIRE EXTINGUISHER CABINET – FULLY RECESSED
10 44 00.11	FIRE EXTINGUISHER
11 31 00.02	REFRIGERATOR – UNDER–COUNTER
12 30 00.20	PLASTIC LAMINATE COUNTERTOP
12 30 00.21	PLASTIC LAMINATE BACKSPLASH – 4 INCH
22 00 00.01	SINK – SEE PLUMBING
26 00 00.01	LIGHT FIXTURE – SEE ELECTRICAL
26 00 00.50	ELECTRICAL OUTLET – SEE ELECTRICAL
27 10 00.10	DATA OUTLET – SEE TECHNOLOGY
27 10 00.11	TELEPHONE JACK – SEE TECHNOLOGY – TELEPHONE DEVICE TO BE OWNER FURNISHED AND INSTALLED
27 40 00.02	CAMERA – SEE TECHNOLOGY
27 50 00.11	CLOCK – SEE TECHNOLOGY
27 70 00.01	TV – FLAT SCREEN – SEE TECHNOLOGY

GENERAL NOTES:

1. NOT ALL POWER & DATA OUTLET/SWITCHING LOCATIONS SHOWN. CONTRACTOR TO REFER TO ELECTRICAL AND TECHNOLOGY DRAWINGS FOR LOCATIONS.
2. REFER TO DRAWING 2/A7.31 FOR FIRE EXTINGUISHER MOUNTING HEIGHTS.
3. REFER TO 3/A7.31 FOR 101116.01 EDGE DETAILS, TYP.

90% CONSTRUCTION DOCUMENTS

NOT FOR CONSTRUCTION

NORTH ARROW

KEYPLAN

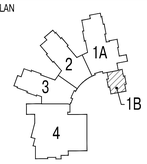

DRAWING NAME:

MEDIA CENTER INTERIOR ELEVATIONS

DRAWN BY:	JMR
REVIEWED BY:	BPH
SCALE:	As Noted
JOB NO.:	1403.00
DATE:	July 25, 2016
DRAWING NUMBER:	A10.12

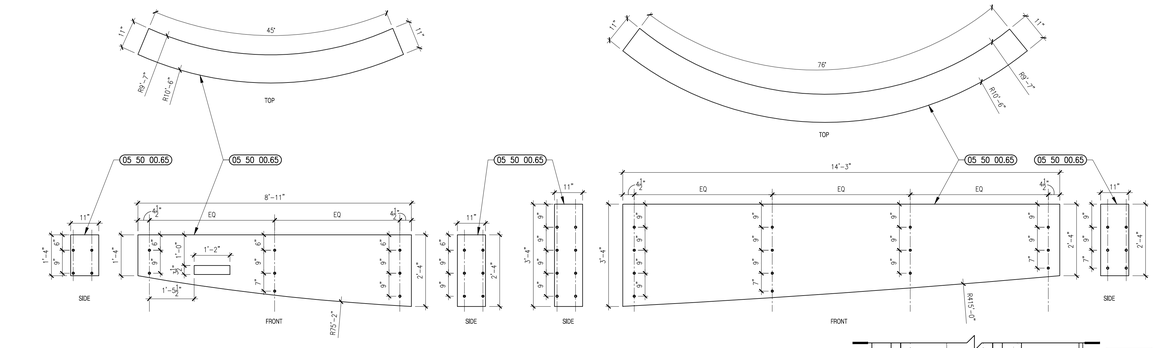

14 CIRCULATION DESK METAL PANEL CONSTRUCTION
1/2" = 1'-0"

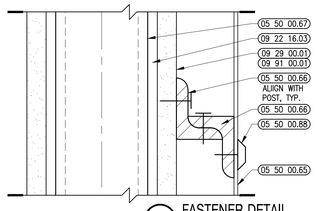

13 FASTENER DETAIL
6" = 1'-0"

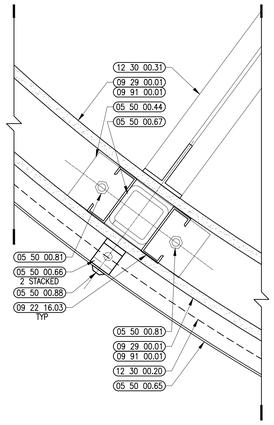

12 CIRCULATION DESK PLAN DETAIL
3" = 1'-0"

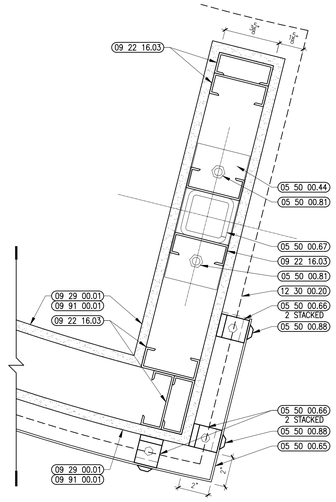

11 CIRCULATION DESK PLAN DETAIL
3" = 1'-0"

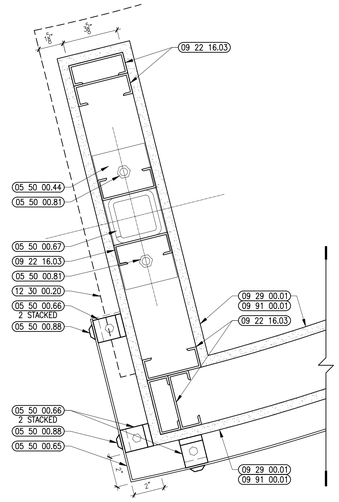

10 CIRCULATION DESK PLAN DETAIL
3" = 1'-0"

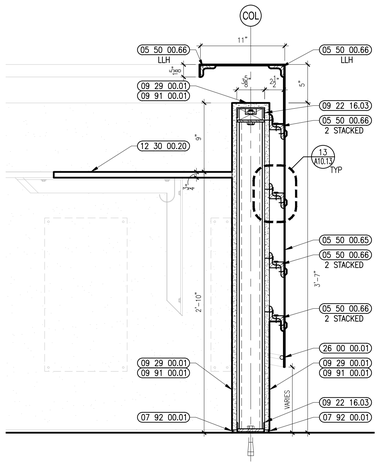

9 CIRCULATION DESK SECTION
1 1/2" = 1'-0"

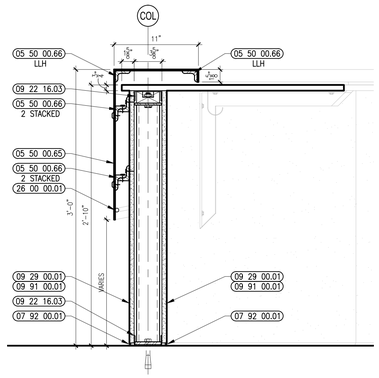

8 CIRCULATION DESK SECTION
1 1/2" = 1'-0"

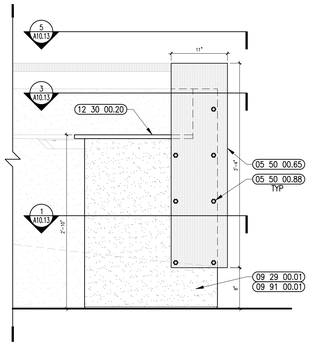

7 CIRCULATION DESK ELEVATION
1 1/2" = 1'-0"

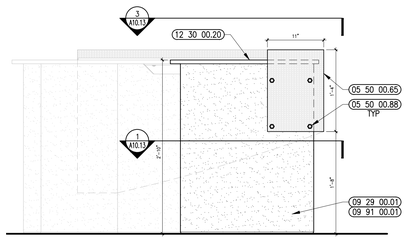

6 CIRCULATION DESK ELEVATION
1 1/2" = 1'-0"

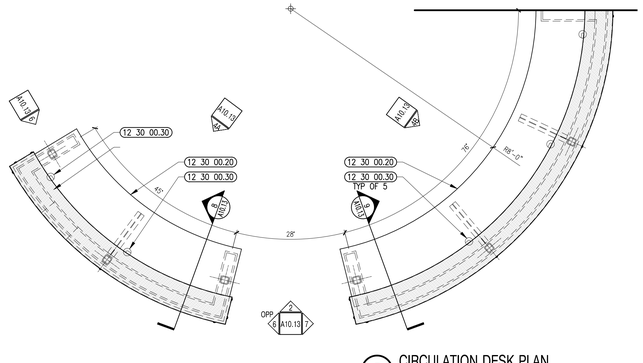

5 CIRCULATION DESK PLAN
1/2" = 1'-0"

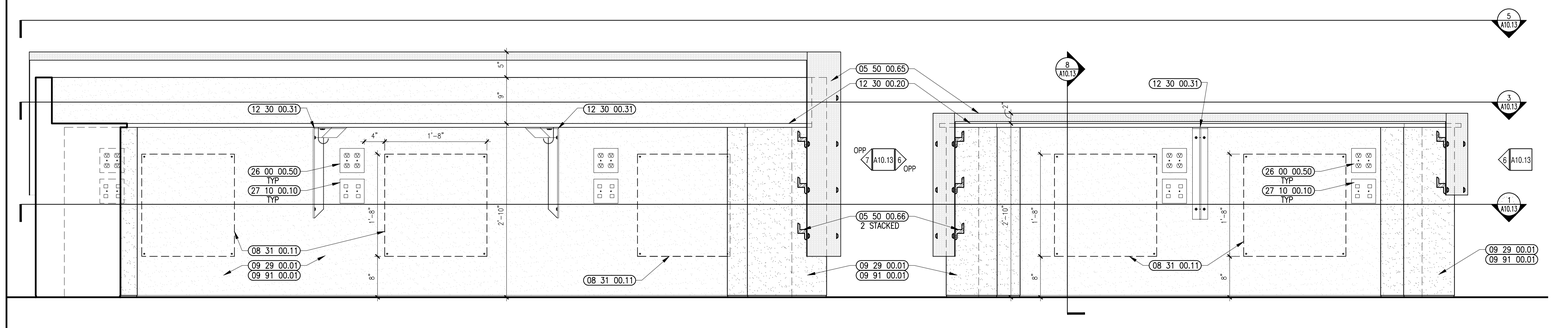

4B CIRCULATION DESK ELEVATION
1" = 1'-0"

4A CIRCULATION DESK ELEVATION
1" = 1'-0"

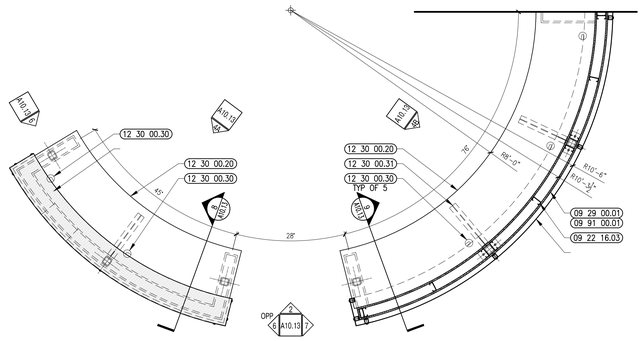

3 CIRCULATION DESK PLAN
1/2" = 1'-0"

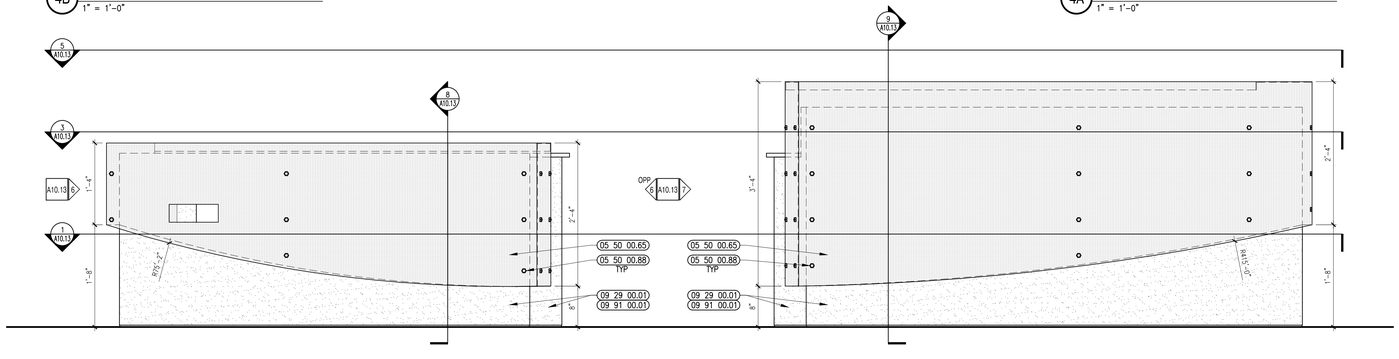

2 CIRCULATION DESK ELEVATION
1" = 1'-0"

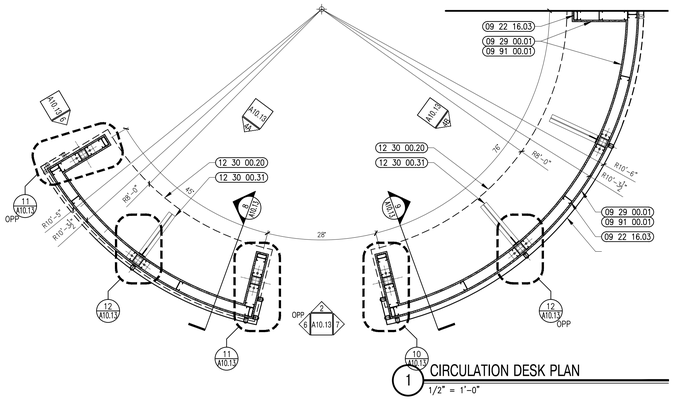

1 CIRCULATION DESK PLAN
1/2" = 1'-0"

A13 architects
526 Boston Post Rd Wayland, MA
508.358.0790 www.a13architects.com

BEVERLY MIDDLE SCHOOL

CABOT STREET
BEVERLY, MA 01915

Copyright © 2016 A13 Architects, LLC

KEYNOTE LEGEND: (REFERENCE SHEETS A0.01 & A0.02 FOR MASTER KEYNOTE LIST AND KEYNOTES NOT LISTED)

05 50 00.44	STEEL PLATE – 1/2 INCH THICK
05 50 00.65	HOT ROLLED STEEL SHEET WITH PREDRILLED HOLES
05 50 00.66	STEEL ANGLE 1–1/2 x 2 x 3/8 LLV @ 1–1/2 INCH DEPTH – PREDRILLED INSTALLATION AT FASTENING HOLES
05 50 00.67	STEEL TUBE POST 3 INCHES x 3 INCHES – PAINTED FINISH
05 50 00.81	ANCHOR BOLT
05 50 00.88	STAINLESS STEEL MECHANICAL FASTENER & WASHER
06 20 00.86	WIRE MANAGEMENT HOOKS ?12 INCHES O.C. ?UNDER COUNTER
07 92 00.01	JOINT SEALANT – TYPE AS REQUIRED
08 31 00.11	ACCESS PANEL
09 22 16.03	METAL STUD 3–5/8 INCH – 16 INCHES O.C. MAX
09 29 00.01	5/8 INCH GYPSUM BOARD – LEVEL 4 FINISH
09 91 00.01	PAINT – SEE SCHEDULE
12 30 00.20	PLASTIC LAMINATE COUNTERTOP
12 30 00.30	GROMMET – 3 INCH – PLASTIC
12 30 00.31	STEEL UNDER COUNTER SUPPORT BRACKET – SIZE AS NOTED OR DRAWN
26 00 00.01	LIGHT FIXTURE – SEE ELECTRICAL
26 00 00.50	ELECTRICAL OUTLET – SEE ELECTRICAL
27 10 00.10	DATA OUTLET – SEE TECHNOLOGY

90% CONSTRUCTION DOCUMENTS

NOT FOR CONSTRUCTION

NORTH ARROW

KEYPLAN

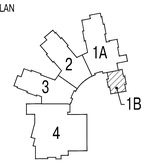

DRAWING NAME:

MEDIA CENTER CIRCULATION DESK

DRAWN BY:	JMR
REVIEWED BY:	BPH
SCALE:	As Noted
JOB NO.:	1403.00
DATE:	July 25, 2016
DRAWING NUMBER:	A10.13

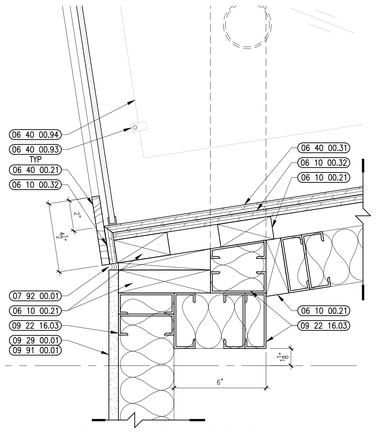

15 DISPLAY/BOOKSHELF DETAIL
3" = 1'-0"

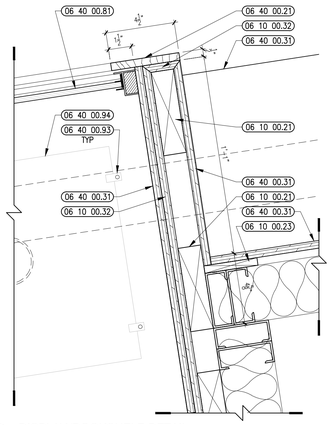

14 DISPLAY/BOOKSHELF DETAIL
3" = 1'-0"

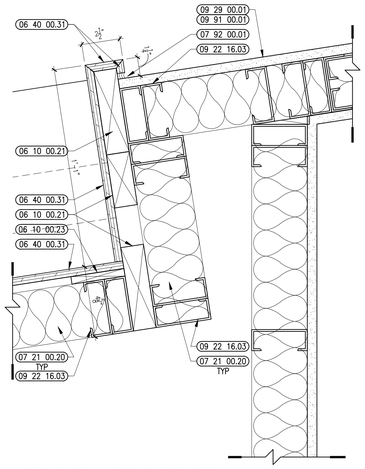

13 DISPLAY/BOOKSHELF DETAIL
3" = 1'-0"

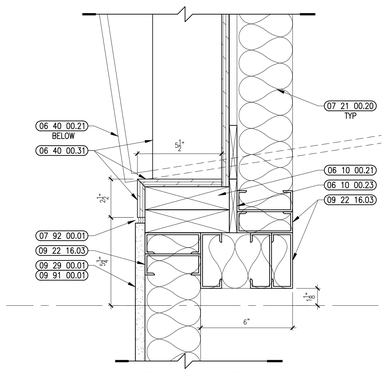

12 DISPLAY/BOOKSHELF DETAIL
3" = 1'-0"

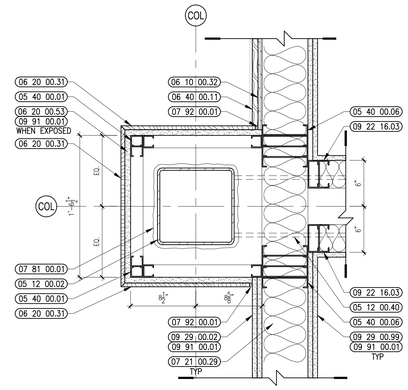

4 COLUMN COVER AT WALL PLAN DETAIL
1 1/2" = 1'-0"

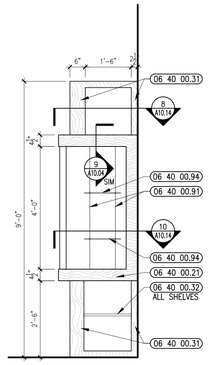

11 DISPLAY/BOOKSHELF ELEVATION
1/2" = 1'-0"

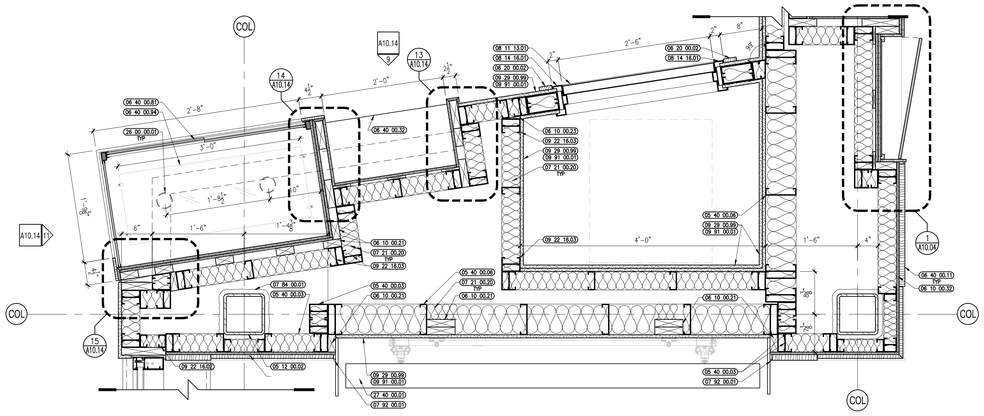

10 DISPLAY/BOOKSHELF PLAN
1" = 1'-0"

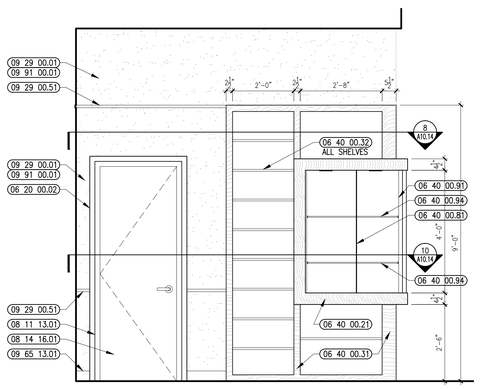

9 DISPLAY/BOOKSHELF ELEVATION
1/2" = 1'-0"

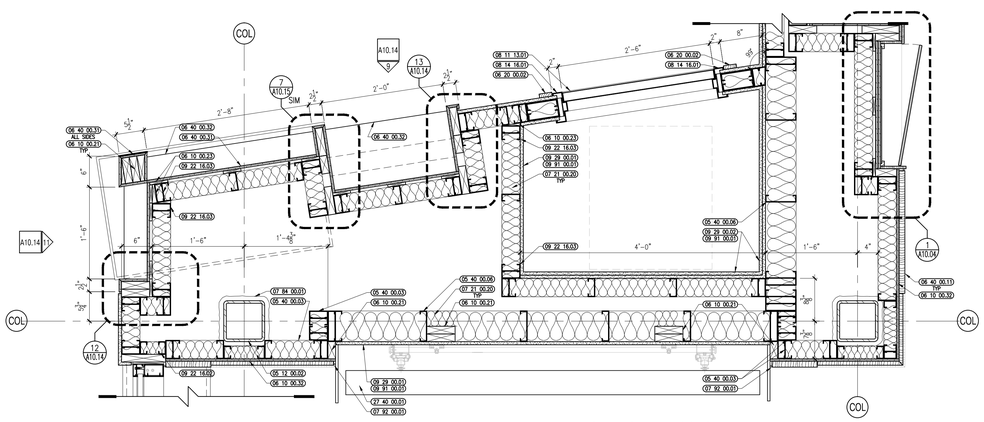

8 DISPLAY/BOOKSHELF PLAN
1" = 1'-0"

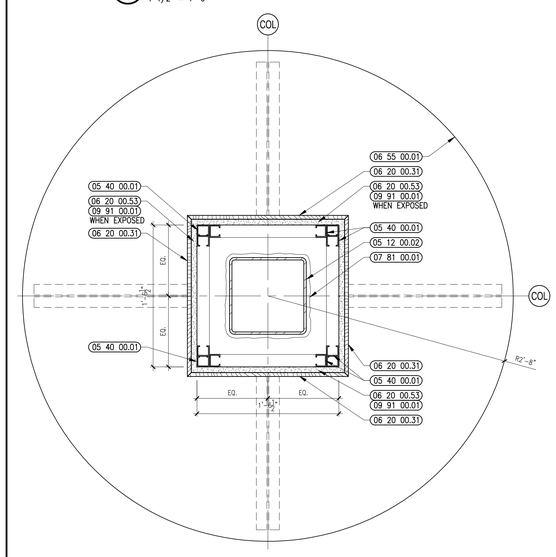

3 DATA RETRIEVAL STATION PLAN
1 1/2" = 1'-0"

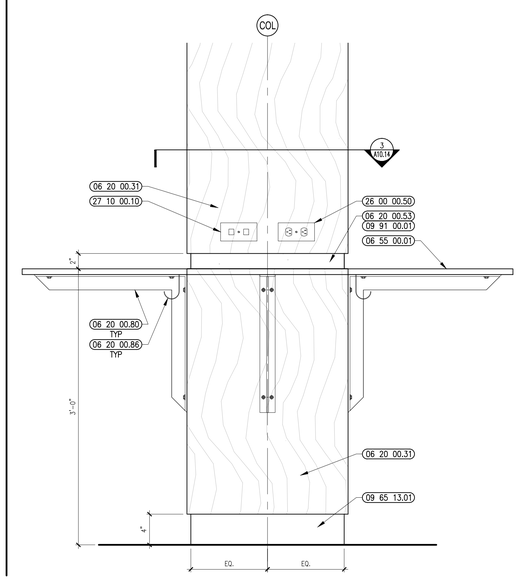

2 DATA RETRIEVAL STATION ELEVATION
1 1/2" = 1'-0"

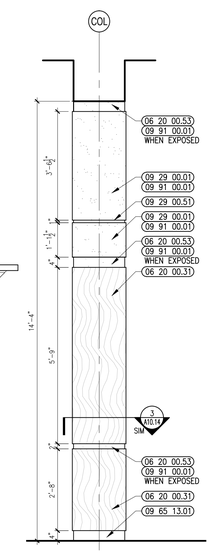

1 COLUMN COVER ELEVATION
1/2" = 1'-0"

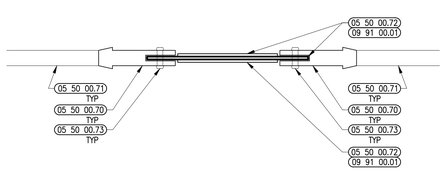

7 BRACE FRAME MEDALLION DETAIL
1 1/2" = 1'-0" TYP.

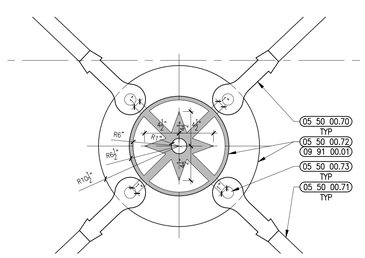

6 BRACE FRAME MEDALLION DETAIL
1 1/2" = 1'-0" TYP.

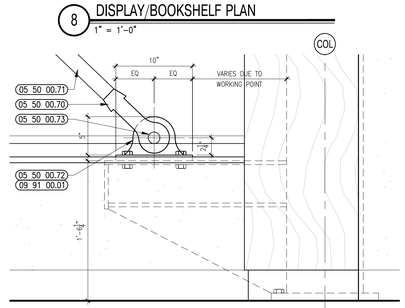

5 BRACE FRAME GUSSET PLATE DETAIL
1 1/2" = 1'-0" TYP.

architects
526 Boston Post Rd Wayland, MA
508.358.0790 www.ai3architects.com

BEVERLY MIDDLE SCHOOL

CABOT STREET
BEVERLY, MA 01915

Copyright © 2016 AI3 Architects, LLC

KEYNOTE LEGEND: (REFERENCE SHEETS A0.01 & A0.02 FOR MASTER KEYNOTE LIST AND KEYNOTES NOT LISTED)

05 12 00.02	STEEL COLUMN – SEE STRUCTURAL
05 12 00.40	BRACE FRAME – SEE STRUCTURAL
05 40 00.01	STEEL STUDS – 1 5/8 INCH – 16 INCHES O.C. MAX
05 40 00.03	STEEL STUDS – 3 5/8 INCH – 16 INCHES O.C. MAX
05 40 00.06	STEEL STUDS – 6 INCH – 16 INCHES O.C. MAX
05 50 00.70	CLEVIS – NUMBER 5 – SEE STRUCTURAL
05 50 00.71	STEEL ROD – 2 INCH DIAMETER – SEE STRUCTURAL
05 50 00.72	STEEL PLATE – 3/8 INCH THICK – SEE STRUCTURAL
05 50 00.73	3/4" STEEL BOLT – SEE STRUCTURAL
06 10 00.21	WOOD BLOCKING – 2X FIRE RETARDANT TREATED – SIZE AS NOTED OR DRAWN
06 10 00.23	WOOD BLOCKING – FIRE RETARDANT TREATED – SIZE AS NOTED OR DRAWN
06 10 00.32	PLYWOOD – 1/2 INCH
06 20 00.02	HARDWOOD TRIM – TRANSPARENT FINISH
06 20 00.31	HARDWOOD VENEER PLYWOOD – 1/2 INCH – TRANSPARENT FINISH
06 20 00.53	MDF PLYWOOD – 3/4 INCH
06 20 00.80	STEEL UNDER COUNTER SUPPORT BRACKET – SIZE AS NOTED OR DRAWN
06 20 00.86	WIRE MANAGEMENT HOOKS ?12 INCHES O.C. ?UNDER COUNTER
06 40 00.11	3D WOOD WALL PANELS – MAPLE
06 40 00.21	HARDWOOD TRIM – 1/2 INCH – TRANSPARENT FINISH
06 40 00.31	HARDWOOD VENEER PLYWOOD – 1/2 INCH – TRANSPARENT FINISH
06 40 00.32	HARDWOOD VENEER PLYWOOD – 3/4 INCH – TRANSPARENT FINISH
06 40 00.81	SLIDING GLASS DOORS – SET IN ALUMINUM TRACKS – PROVIDE LOCKS
06 40 00.91	CABLE – 1/8 INCH THICK WITH TENSIONER
06 40 00.93	FIXING SHELF SUPPORT – SIDE SHELF FIXING CLAMPS FOR 3/8 INCH GLASS SHELVES
06 40 00.94	GLASS SHELF – 14 INCH X 24 INCH X 3/8 INCH TEMPERED GLASS SHELF
06 55 00.01	SOLID SURFACE MATERIAL
07 21 00.20	GLASS FIBER INSULATION
07 21 00.29	GLASS FIBER ACOUSTICAL BLANKET INSULATION – MATCH DEPTH OF STUD – UNFACED
07 81 00.01	CEMENTITIOUS FIREPROOFING
07 84 00.01	FIRE SAFING MINERAL WOOL
07 92 00.01	JOINT SEALANT – TYPE AS REQUIRED
08 11 13.01	DOOR AND FRAME– SEE DOOR SCHEDULE
08 14 16.01	SOLID CORE FLUSH WOOD DOOR– SEE DOOR SCHEDULE
09 22 16.02	METAL STUD 2–1/2 INCH – 16 INCHES O.C. MAX
09 22 16.03	METAL STUD 3–5/8 INCH – 16 INCHES O.C. MAX
09 29 00.01	5/8 INCH GYPSUM BOARD – LEVEL 4 FINISH
09 29 00.02	5/8 INCH GYPSUM BOARD – 2 LAYERS – LEVEL 4 FINISH
09 29 00.51	ALUMINUM REVEAL TRIM – SATIN FINISH – 1 INCH
09 29 00.99	GYPSUM BOARD SYSTEM – LEVEL 4 FINISH – REFER TO FLOOR PLANS AND WALL TYPES FOR COMPONENTS
09 65 13.01	RUBBER BASE – 4"
09 91 00.01	PAINT – SEE SCHEDULE
26 00 00.01	LIGHT FIXTURE – SEE ELECTRICAL
26 00 00.50	ELECTRICAL OUTLET – SEE ELECTRICAL
27 10 00.10	DATA OUTLET – SEE TECHNOLOGY
27 40 00.01	LCD TV – SEE TECHNOLOGY

90% CONSTRUCTION DOCUMENTS

NOT FOR CONSTRUCTION

NORTH ARROW

KEYPLAN

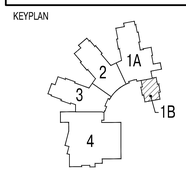

DRAWING NAME:

MEDIA CENTER INTERIOR DETAILS

DRAWN BY:	JMR
REVIEWED BY:	BPH
SCALE:	As Noted
JOB NO.:	1403.00
DATE:	July 25, 2016
DRAWING NUMBER:	A10.14

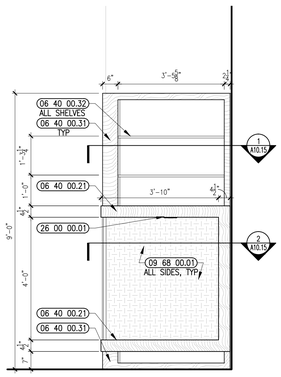

11 READING NOOK/BOOKSHELF ELEVATION
1/2" = 1'-0"

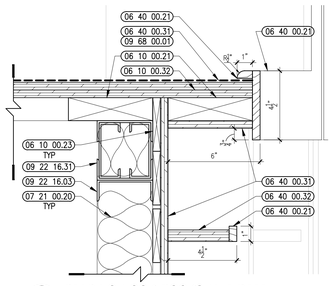

16 READING NOOK/BOOKSHELF DETAIL
3" = 1'-0"

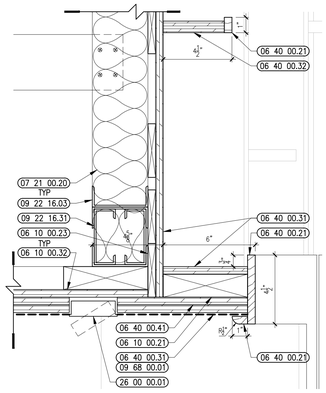

15 READING NOOK/BOOKSHELF DETAIL
3" = 1'-0"

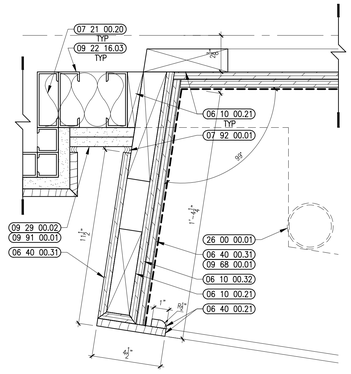

14 READING NOOK/BOOKSHELF DETAIL
3" = 1'-0"

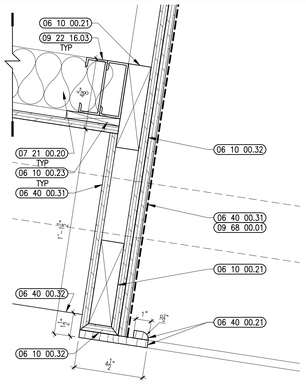

13 READING NOOK/BOOKSHELF DETAIL
3" = 1'-0"

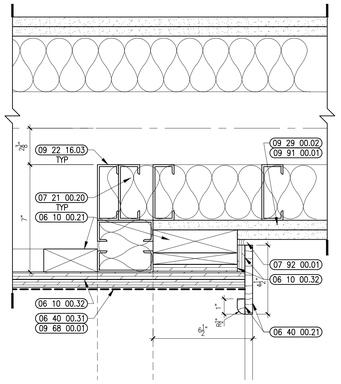

12 READING NOOK/BOOKSHELF DETAIL
3" = 1'-0"

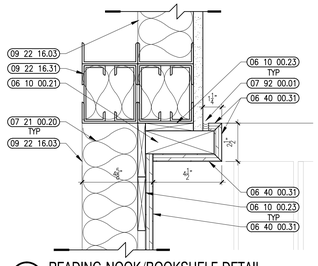

10 READING NOOK/BOOKSHELF DETAIL
3" = 1'-0"

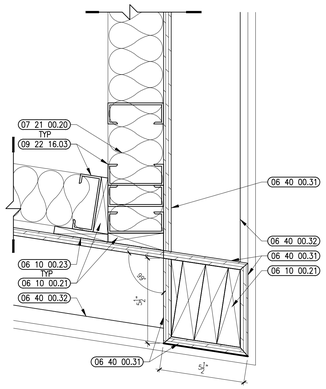

9 READING NOOK/BOOKSHELF DETAIL
3" = 1'-0"

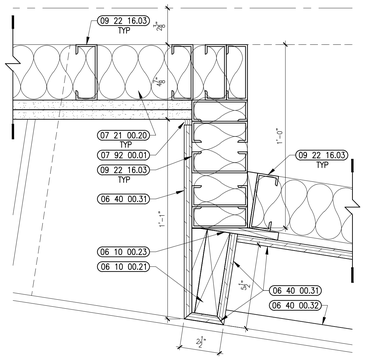

8 READING NOOK/BOOKSHELF DETAIL
3" = 1'-0"

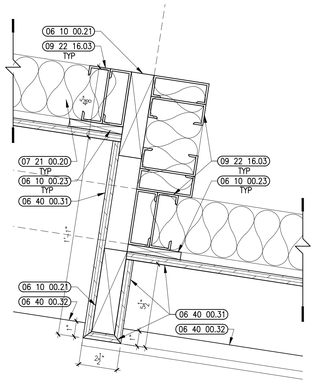

7 READING NOOK/BOOKSHELF DETAIL
3" = 1'-0"

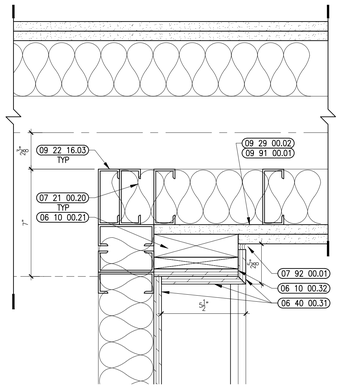

6 READING NOOK/BOOKSHELF DETAIL
3" = 1'-0"

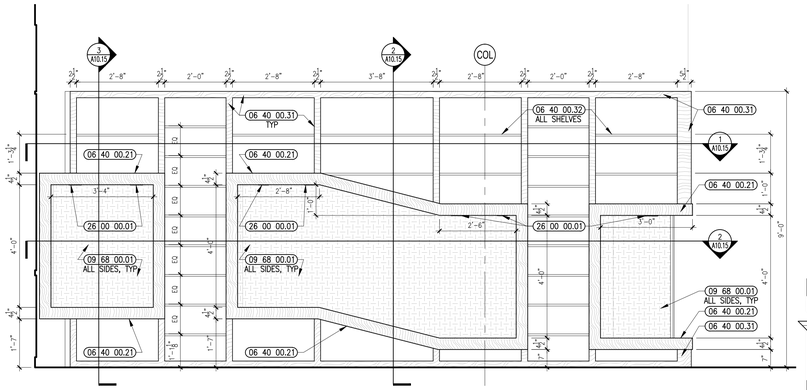

5 READING NOOK/BOOKSHELF ELEVATION
1/2" = 1'-0"

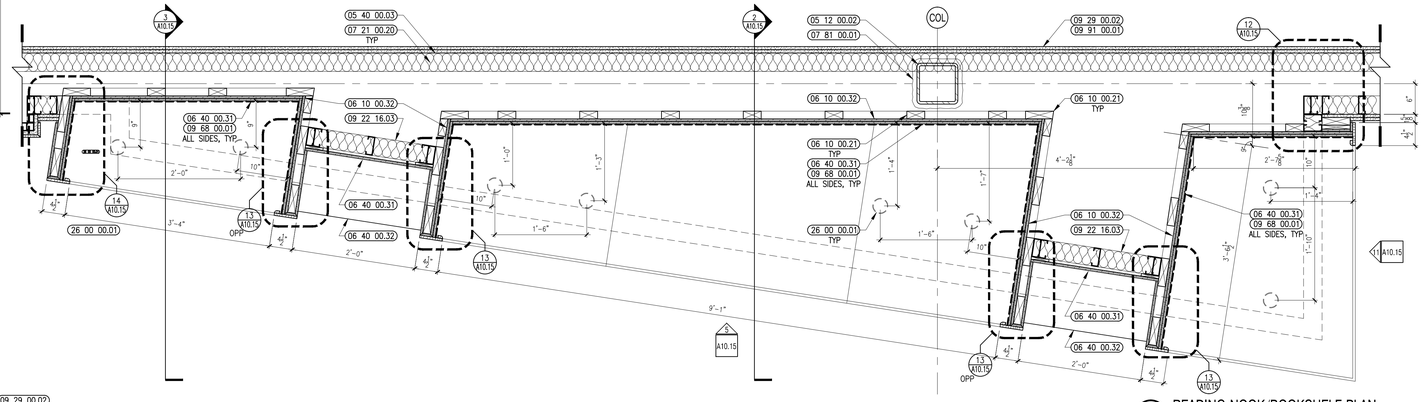

4 READING NOOK/BOOKSHELF PLAN
1" = 1'-0"

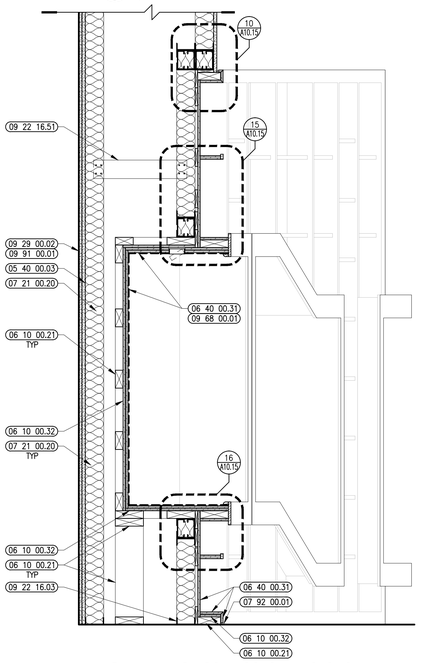

3 READING NOOK/BOOKSHELF SECTION
1" = 1'-0"

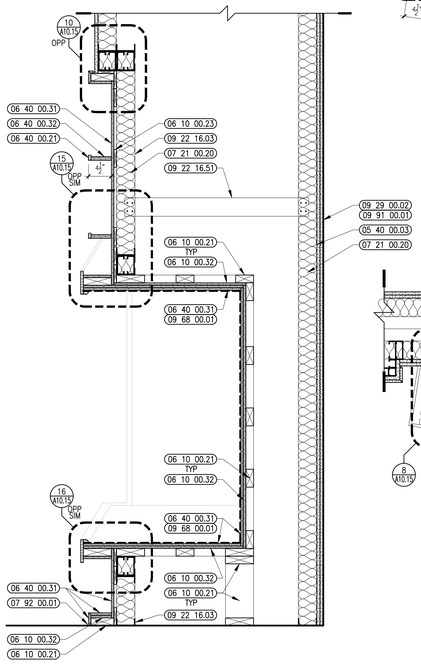

2 READING NOOK/BOOKSHELF SECTION
1" = 1'-0"

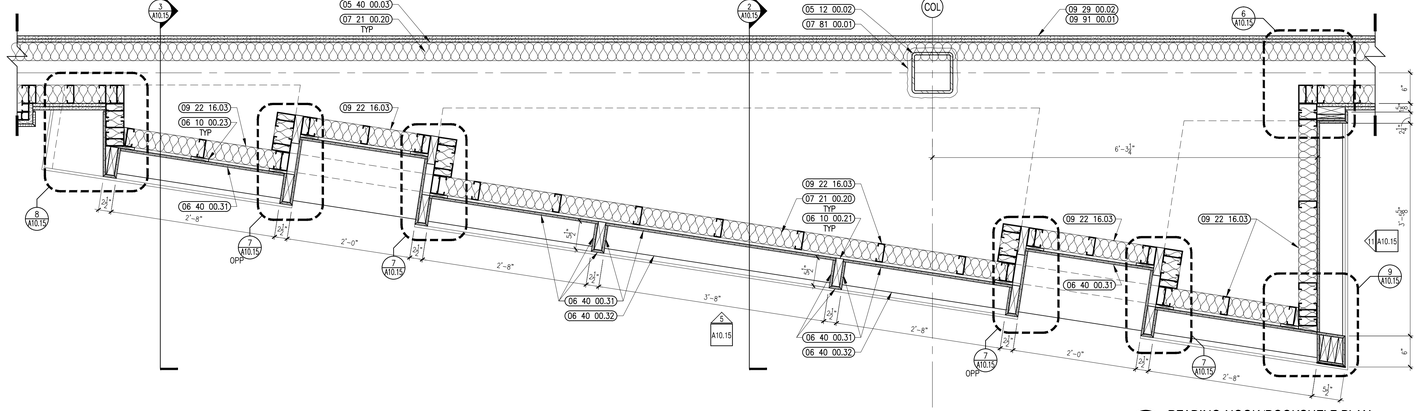

1 READING NOOK/BOOKSHELF PLAN
1" = 1'-0"

architects

526 Boston Post Rd Wayland, MA
508.358.0790 www.ai3architects.com

BEVERLY MIDDLE SCHOOL

CABOT STREET
BEVERLY, MA 01915

Copyright © 2016 A13 Architects, LLC

KEYNOTE LEGEND: (REFERENCE SHEETS A0.01 & A0.02 FOR MASTER KEYNOTE LIST AND KEYNOTES NOT LISTED)

05 12 00.02	STEEL COLUMN – SEE STRUCTURAL
05 40 00.03	STEEL STUDS – 3 5/8 INCH – 16 INCHES O.C. MAX
06 10 00.21	WOOD BLOCKING – 2X FIRE RETARDANT TREATED – SIZE AS NOTED OR DRAWN
06 10 00.23	WOOD BLOCKING – FIRE RETARDANT TREATED – SIZE AS NOTED OR DRAWN
06 10 00.32	PLYWOOD – 1/2 INCH
06 40 00.21	HARDWOOD TRIM – 1/2 INCH – TRANSPARENT FINISH
06 40 00.31	HARDWOOD VENEER PLYWOOD – 1/2 INCH – TRANSPARENT FINISH
06 40 00.32	HARDWOOD VENEER PLYWOOD – 3/4 INCH – TRANSPARENT FINISH
06 40 00.41	PLYWOOD – 1/2 INCH
07 21 00.20	GLASS FIBER INSULATION
07 81 00.01	CEMENTITIOUS FIREPROOFING
07 92 00.01	JOINT SEALANT – TYPE AS REQUIRED
09 22 16.03	METAL STUD 3-5/8 INCH – 16 INCHES O.C. MAX
09 22 16.31	BOXED HEADER
09 22 16.51	METAL STUD BRACE
09 29 00.02	5/8 INCH GYPSUM BOARD – 2 LAYERS – LEVEL 4 FINISH
09 68 00.01	CARPET
09 91 00.01	PAINT – SEE SCHEDULE
26 00 00.01	LIGHT FIXTURE – SEE ELECTRICAL

90% CONSTRUCTION DOCUMENTS

NOT FOR CONSTRUCTION

NORTH ARROW

KEYPLAN

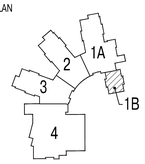

DRAWING NAME:

MEDIA CENTER INTERIOR DETAILS

DRAWN BY:	JMR
REVIEWED BY:	BPH
SCALE:	As Noted
JOB NO.:	1403.00
DATE:	July 25, 2016
DRAWING NUMBER:	A10.15

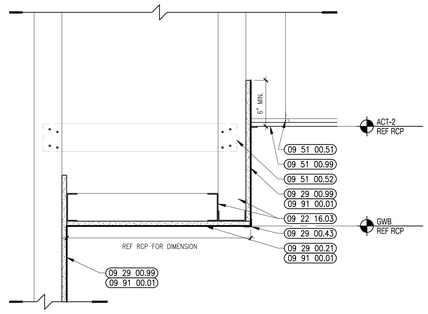

8 SOFFIT DETAIL
1-1/2"=1'-0"

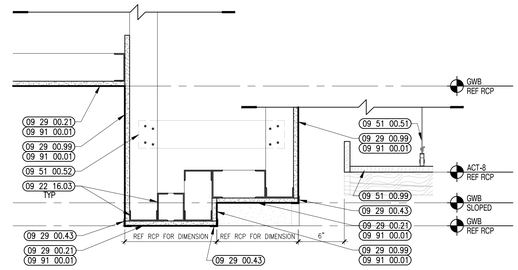

4 SOFFIT DETAIL
1-1/2"=1'-0"

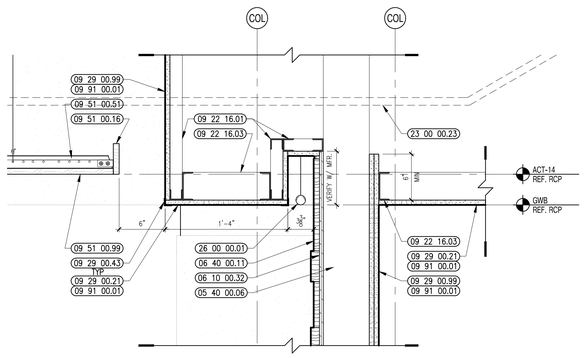

10 SOFFIT DETAIL
1-1/2"=1'-0"

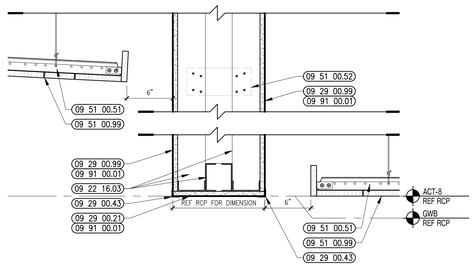

7 SOFFIT DETAIL
1-1/2"=1'-0"

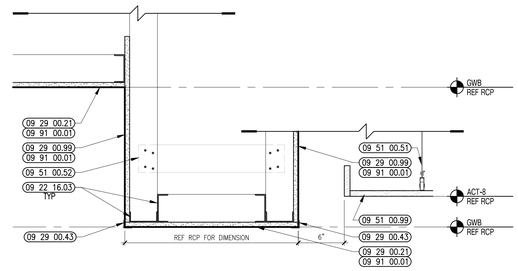

3 SOFFIT DETAIL
1-1/2"=1'-0"

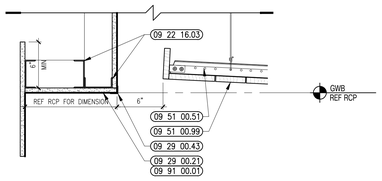

9 SOFFIT DETAIL
1-1/2"=1'-0"

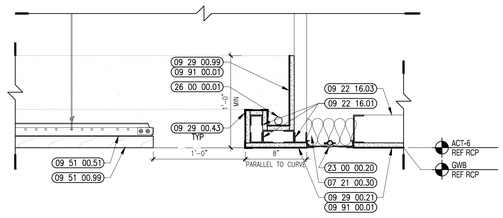

6 SOFFIT DETAIL
1-1/2"=1'-0"

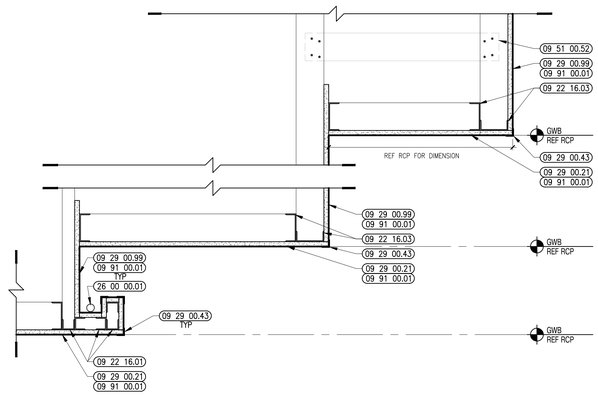

2 SOFFIT DETAIL
1-1/2"=1'-0"

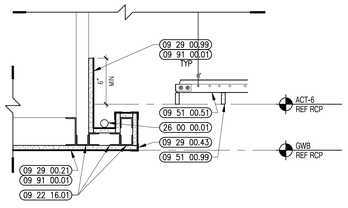

9 SOFFIT DETAIL
1-1/2"=1'-0"

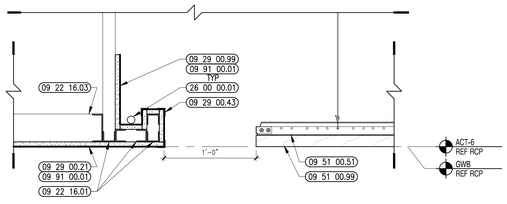

5 SOFFIT DETAIL
1-1/2"=1'-0"

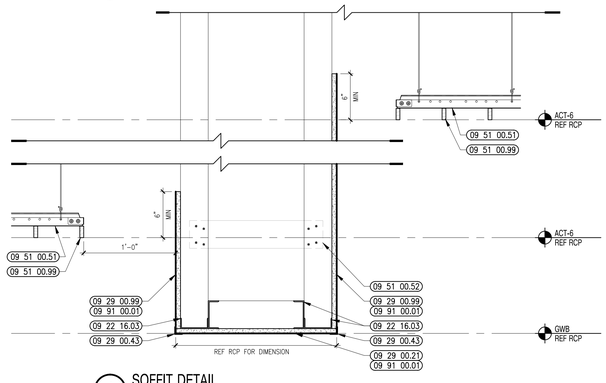

1 SOFFIT DETAIL
1-1/2"=1'-0"

architects
526 Boston Post Rd Wayland, MA
508.358.0790 www.ai3architects.com

BEVERLY MIDDLE SCHOOL

CABOT STREET
BEVERLY, MA 01915

REFLECTED CEILING PLAN LEGEND:

- SUPPLY GRILL– SEE MECH.
- RETURN GRILL– SEE MECH.
- GWB SOFFIT
- WOOD VENEER TILE
- OCCUPANCY SENSOR– SEE ELEC.
- DAYLIGHT SENSOR– SEE ELEC.
- ACOUSTIC PANEL– ABSORPTIVE
- ACOUSTIC PANEL– REFLECTIVE
- STAGE LIGHTING– SEE ELEC. AND THEATER
- STRIP LIGHT FIXTURE– SEE ELEC.
- SCONCE LIGHT FIXTURE– SEE ELEC.
- RECESSED LIGHT FIXTURE– SEE ELEC.
- LINEAR PENDANT LIGHT FIXTURE– SEE ELEC. (MOUNTING HEIGHT AS NOTED) X'-XX"
- PENDANT LIGHT FIXTURE– SEE ELEC.
- DOWN LIGHT– SEE ELEC.
- TRACK LIGHTING FIXTURE– SEE ELEC.

GENERAL NOTES:

1. ALL CEILING MOUNTED ITEMS, INCLUDING SPRINKLER HEADS, SMOKE DETECTORS, SPEAKERS, VIDEO, WIRELESS ACCESS POINTS AND RECESSED DOWN LIGHTS, PLACED IN A 2'X4' CEILING TILE ARE TO BE ON CENTERLINE OF 2'-0" DIMENSION AND TO BE AT 1'-0" OFF EITHER END OR IN THE EXACT CENTER OF THE 4'-0" DIMENSION.
2. ALL CEILING MOUNTED ITEMS INCLUDING SPRINKLER HEADS, SMOKE DETECTORS, SPEAKERS, VIDEO, WIRELESS ACCESS POINTS AND RECESSED DOWN LIGHTS PLACED IN A 2'X2' CEILING TILE TO BE CENTERED IN THE EXACT CENTER OF THE TILE.
3. ALL SUPPLY GRILLES, RETURN REGISTERS, SPRINKLER HEADS, SMOKE DETECTORS, LIGHTS, SPEAKERS, VIDEO, WIRELESS ACCESS POINTS AND EXIT SIGNS TO BE LOCATED ON COORDINATION DRAWINGS. FINAL PLACEMENT TO BE APPROVED BY ARCHITECT.
4. DIVISION 078100, 078400, 092123, 092216 AND 092900 REFER TO DRAWINGS G0.1, G0.2, G0.3, G0.4 AND G0.5 FOR ROOMS (AREAS) THAT ARE REQUIRED TO HAVE FIRE RATED CEILING/FLOOR AND WALL ASSEMBLIES.
5. PAINT CONCEALED SPRINKLER HEAD COVERS AT WOOD CEILING TO MATCH WOOD SPECIES.
6. PAINT CONCEALED SPRINKLER HEAD COVERS AT GWB CEILING TO MATCH CEILING PAINT COLOR.
7. ACOUSTICAL CEILING FILED SUB-CONTRACTOR IS TO THOROUGHLY COORDINATE EQUIPMENT, DEVICES, AND SPRINKLER HEADS NOTED ON THE FIRE PROTECTION DRAWINGS, ELECTRICAL DRAWINGS, MECHANICAL DRAWINGS, AND TECHNOLOGY DRAWINGS.
8. DIVISION 079200 TO PROVIDE JOINT SEALANT AT ALL GWB SOFFITS THAT ABUT DIFFERENT MATERIALS.
9. ALL SOFFITS TO ALIGN WITH ADJACENT SURFACE, UNLESS NOTED OTHERWISE.

90% CONSTRUCTION DOCUMENTS

NOT FOR CONSTRUCTION

NORTH ARROW

KEYPLAN

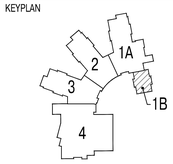

DRAWING NAME:

MEDIA CENTER SOFFIT DETAILS

DRAWN BY:	JMR
REVIEWED BY:	BPH
SCALE:	As Noted
JOB NO.:	1403.00
DATE:	July 25, 2016
DRAWING NUMBER:	A10.16

Copyright © 2016 A13 Architects, LLC

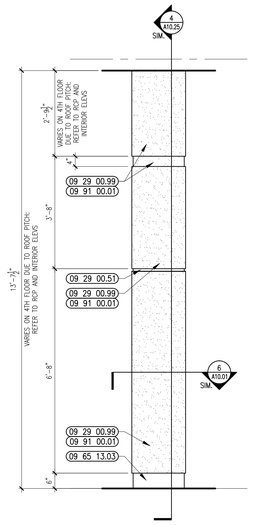

3 STUDENT DINING COLUMN ENLARGED ELEVATION
1/2" = 1'-0"

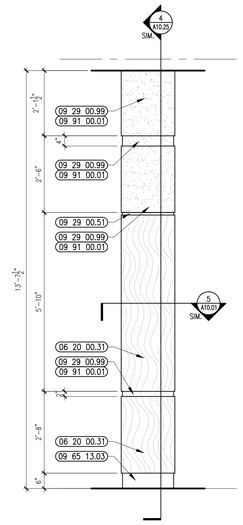

2 STUDENT DINING COLUMN ENLARGED ELEVATION
1/2" = 1'-0"

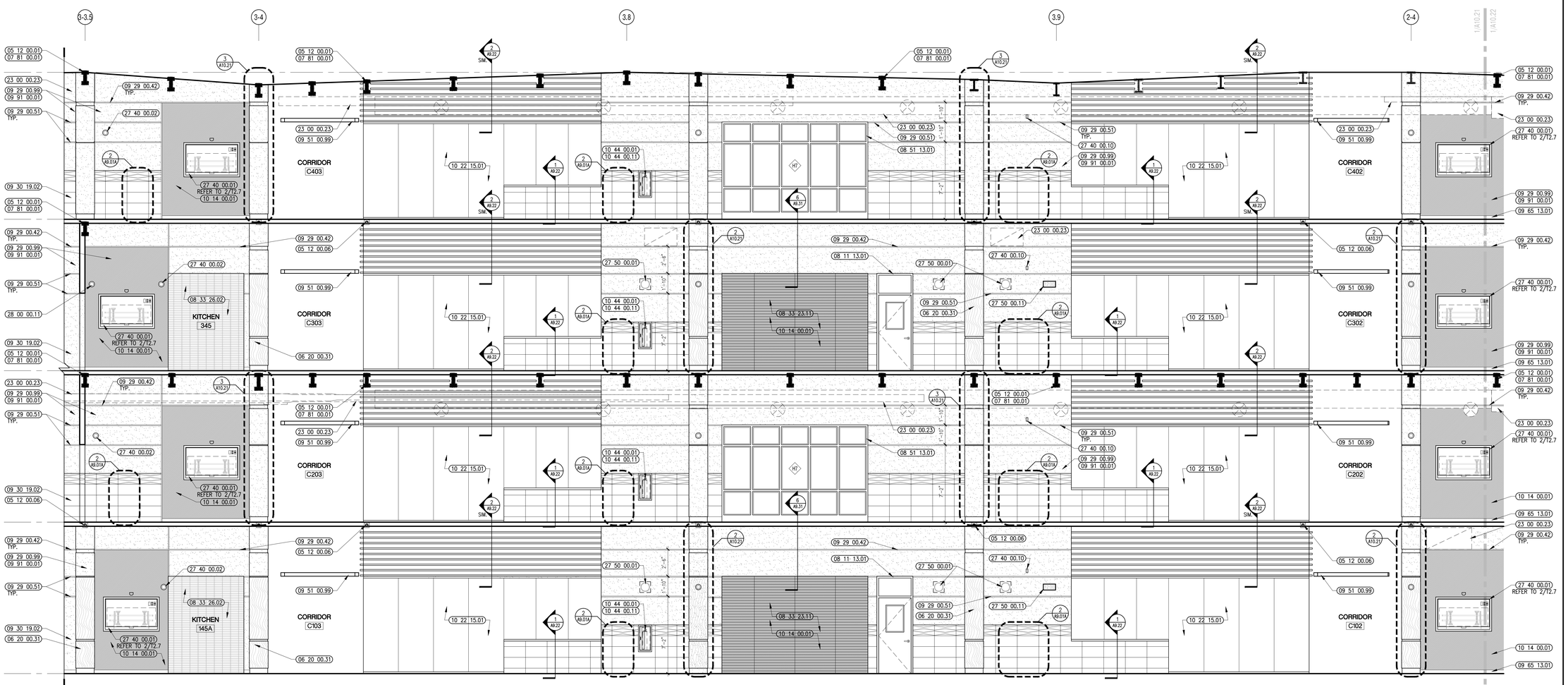

1 STUDENT DINING INTERIOR ELEVATION
1/4" = 1'-0" DRAWN FLAT

526 Boston Post Rd Wayland, MA
508.358.0790 www.ai3architects.com

BEVERLY MIDDLE SCHOOL

CABOT STREET
BEVERLY, MA 01915

Copyright © 2016 - Ai3 Architects, LLC

KEYNOTE LEGEND: (REFERENCE SHEETS A0.01 & A0.02 FOR MASTER KEYNOTE LIST AND KEYNOTES NOT LISTED)

05 12 00.01	STEEL BEAM – SEE STRUCTURAL
05 12 00.06	STEEL TUBE – SEE STRUCTURAL
06 20 00.31	HARDWOOD VENEER PLYWOOD – 1/2 INCH – TRANSPARENT FINISH
07 81 00.01	CEMENTITIOUS FIREPROOFING
08 11 13.01	DOOR AND FRAME– SEE DOOR SCHEDULE
08 33 23.11	TYPE OHC2 – INTERIOR – 13'–6"W x 9'–0"H – POWER OPERATED
08 33 26.02	TYPE OHC2 – 7'–0"W x 7'–2"H – POWER OPERATED
08 51 13.01	ALUMINUM WINDOW – SEE SCHEDULE
09 29 00.42	REVEAL – PAINTABLE 3/4 INCH
09 29 00.51	ALUMINUM REVEAL TRIM – SATIN FINISH – 1 INCH
09 29 00.99	GYPSUM BOARD SYSTEM – LEVEL 4 FINISH – REFER TO FLOOR PLANS AND WALL TYPES FOR COMPONENTS
09 30 19.02	PORCELAIN WALL TILE
09 51 00.99	ACOUSTICAL CEILING – REFERENCE REFLECTED CEILING PLANS FOR TYPE AND HEIGHT
09 65 13.01	RUBBER BASE – 4"
09 65 13.03	RUBBER BASE – 6"
09 91 00.01	PAINT – SEE SCHEDULE
10 14 00.01	INTERIOR SIGNAGE – TYPE AS SCHEDULED
10 22 15.01	INTERIOR GLASS WALL SYSTEM
10 44 00.01	FIRE EXTINGUISHER CABINET – FULLY RECESSED
10 44 00.11	FIRE EXTINGUISHER
23 00 00.23	DUCT – SEE HVAC
27 40 00.01	LCD TV – SEE TECHNOLOGY
27 40 00.02	CAMERA – SEE TECHNOLOGY
27 40 00.10	FACE PLATE – SEE TECHNOLOGY
27 50 00.01	SPEAKER – SEE TECHNOLOGY – PUBLIC ADDRESS
27 50 00.11	CLOCK – SEE TECHNOLOGY
28 00 00.11	MOTION SENSOR – SEE TECHNOLOGY

GENERAL NOTES:

1. NOT ALL POWER AND DATA OUTLET/SWITCHING LOCATIONS SHOWN. COORDINATE WITH ELECTRICAL AND TECHNOLOGY DRAWINGS FOR ALL LOCATIONS.
2. REFER TO DETAIL 2/A7.31 FOR FIRE EXTINGUISHER DETAILS AND MOUNTING HEIGHTS.

90% CONSTRUCTION DOCUMENTS

NOT FOR CONSTRUCTION

NORTH ARROW

KEYPLAN

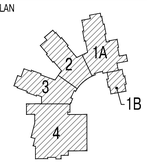

DRAWING NAME:

STUDENT DINING INTERIOR ELEVATIONS

DRAWN BY:	MJR
REVIEWED BY:	BPH
SCALE:	As Noted
JOB NO.:	1403.00
DATE:	July 25, 2016
DRAWING NUMBER:	A10.21

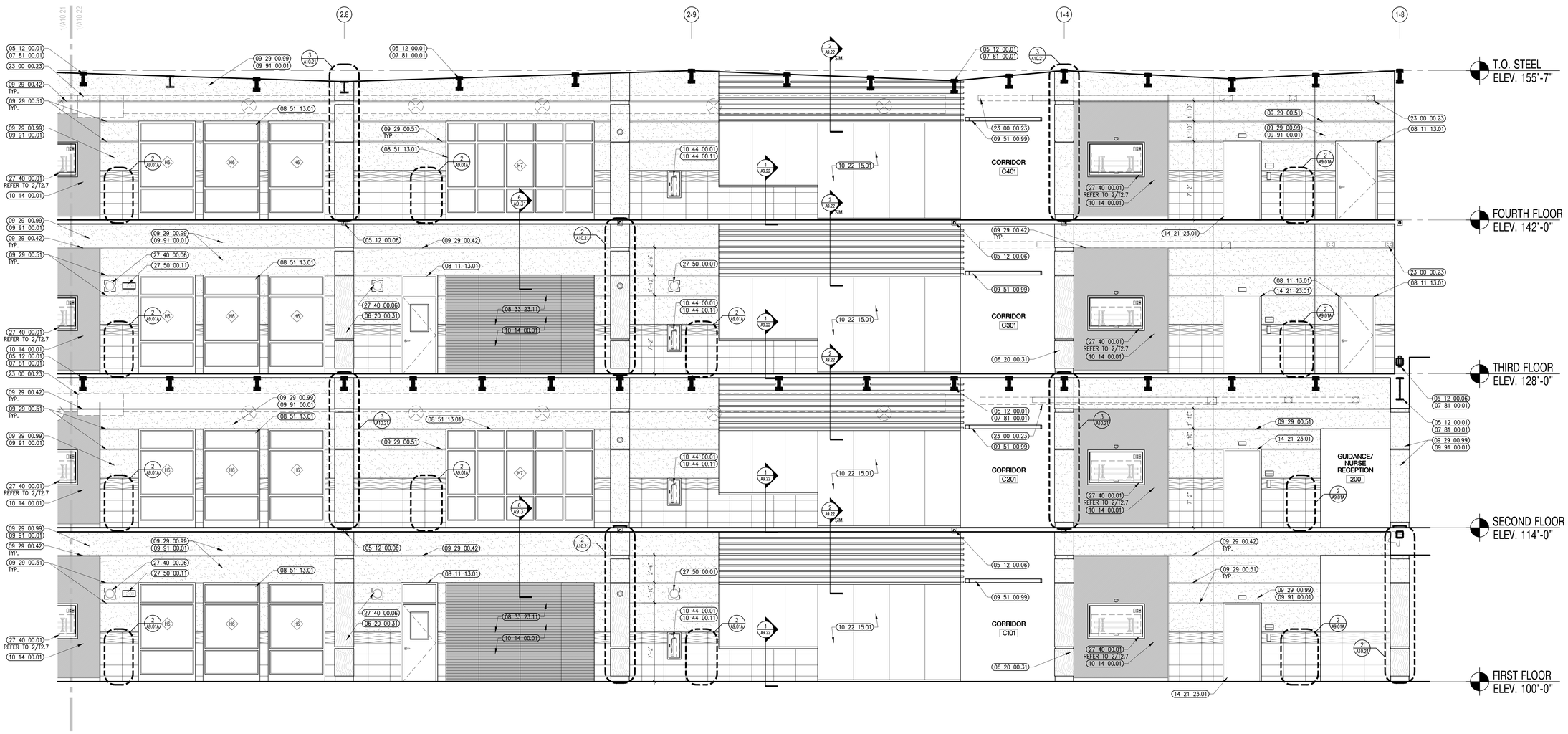

1 STUDENT DINING INTERIOR ELEVATION
1/4" = 1'-0" DRAWN FLAT

A13 architects
526 Boston Post Rd Wayland, MA
508.358.0790 www.a13architects.com

BEVERLY MIDDLE SCHOOL

CABOT STREET
BEVERLY, MA 01915

Copyright © 2016 A13 Architects, LLC

KEYNOTE LEGEND: (REFERENCE SHEETS A0.01 & A0.02 FOR MASTER KEYNOTE LIST AND KEYNOTES NOT LISTED)

05 12 00.01	STEEL BEAM – SEE STRUCTURAL
05 12 00.06	STEEL TUBE – SEE STRUCTURAL
06 20 00.31	HARDWOOD VENEER PLYWOOD – 1/2 INCH – TRANSPARENT FINISH
07 81 00.01	CEMENTITIOUS FIREPROOFING
08 11 13.01	DOOR AND FRAME– SEE DOOR SCHEDULE
08 33 23.11	TYPE OHC2 – INTERIOR – 13'–6"W x 9'–0"H – POWER OPERATED
08 51 13.01	ALUMINUM WINDOW – SEE SCHEDULE
09 29 00.42	REVEAL – PAINTABLE 3/4 INCH
09 29 00.51	ALUMINUM REVEAL TRIM – SATIN FINISH – 1 INCH
09 29 00.99	GYPSUM BOARD SYSTEM – LEVEL 4 FINISH – REFER TO FLOOR PLANS AND WALL TYPES FOR COMPONENTS
09 51 00.99	ACOUSTICAL CEILING – REFERENCE REFLECTED CEILING PLANS FOR TYPE AND HEIGHT
09 91 00.01	PAINT – SEE SCHEDULE
10 14 00.01	INTERIOR SIGNAGE – TYPE AS SCHEDULED
10 22 15.01	INTERIOR GLASS WALL SYSTEM
10 44 00.01	FIRE EXTINGUISHER CABINET – FULLY RECESSED
10 44 00.11	FIRE EXTINGUISHER
14 21 23.01	ELEVATOR – TYPE 1 – SEE SPECIFICATION
23 00 00.23	DUCT – SEE HVAC
27 40 00.01	LCD TV – SEE TECHNOLOGY
27 40 00.06	SPEAKER – SEE TECHNOLOGY – LOCAL SOUND SYSTEM
27 50 00.01	SPEAKER – SEE TECHNOLOGY – PUBLIC ADDRESS
27 50 00.11	CLOCK – SEE TECHNOLOGY

GENERAL NOTES:

1. NOT ALL POWER AND DATA OUTLET/SWITCHING LOCATIONS SHOWN. COORDINATE WITH ELECTRICAL AND TECHNOLOGY DRAWINGS FOR ALL LOCATIONS.
2. REFER TO DETAIL 2/A7.31 FOR FIRE EXTINGUISHER DETAILS AND MOUNTING HEIGHTS.

90% CONSTRUCTION DOCUMENTS

NOT FOR CONSTRUCTION

NORTH ARROW

KEYPLAN

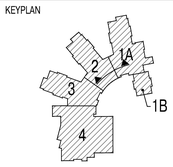

DRAWING NAME:

STUDENT DINING INTERIOR ELEVATIONS

DRAWN BY:	MJR
REVIEWED BY:	BPH
SCALE:	As Noted
JOB NO.:	1403.00
DATE:	July 25, 2016
DRAWING NUMBER:	A10.22

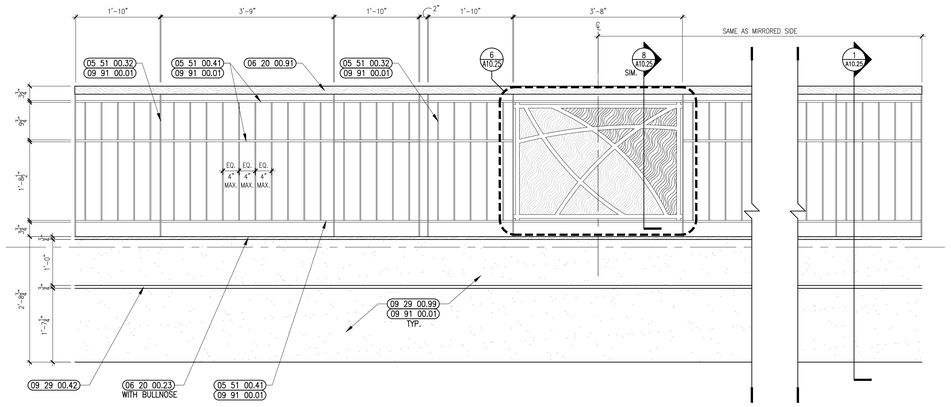

3 ENLARGED STUDENT DINING RAILING ELEVATION
3/4" = 1'-0"

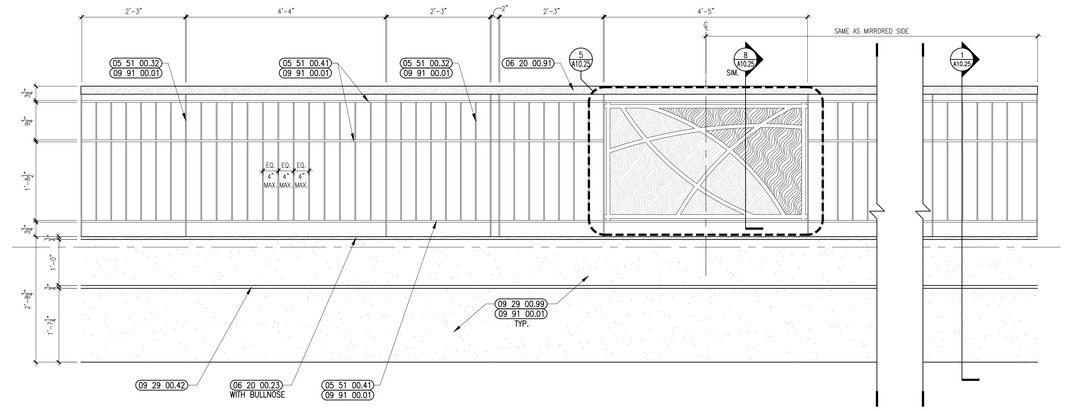

2 ENLARGED STUDENT DINING RAILING ELEVATION
3/4" = 1'-0"

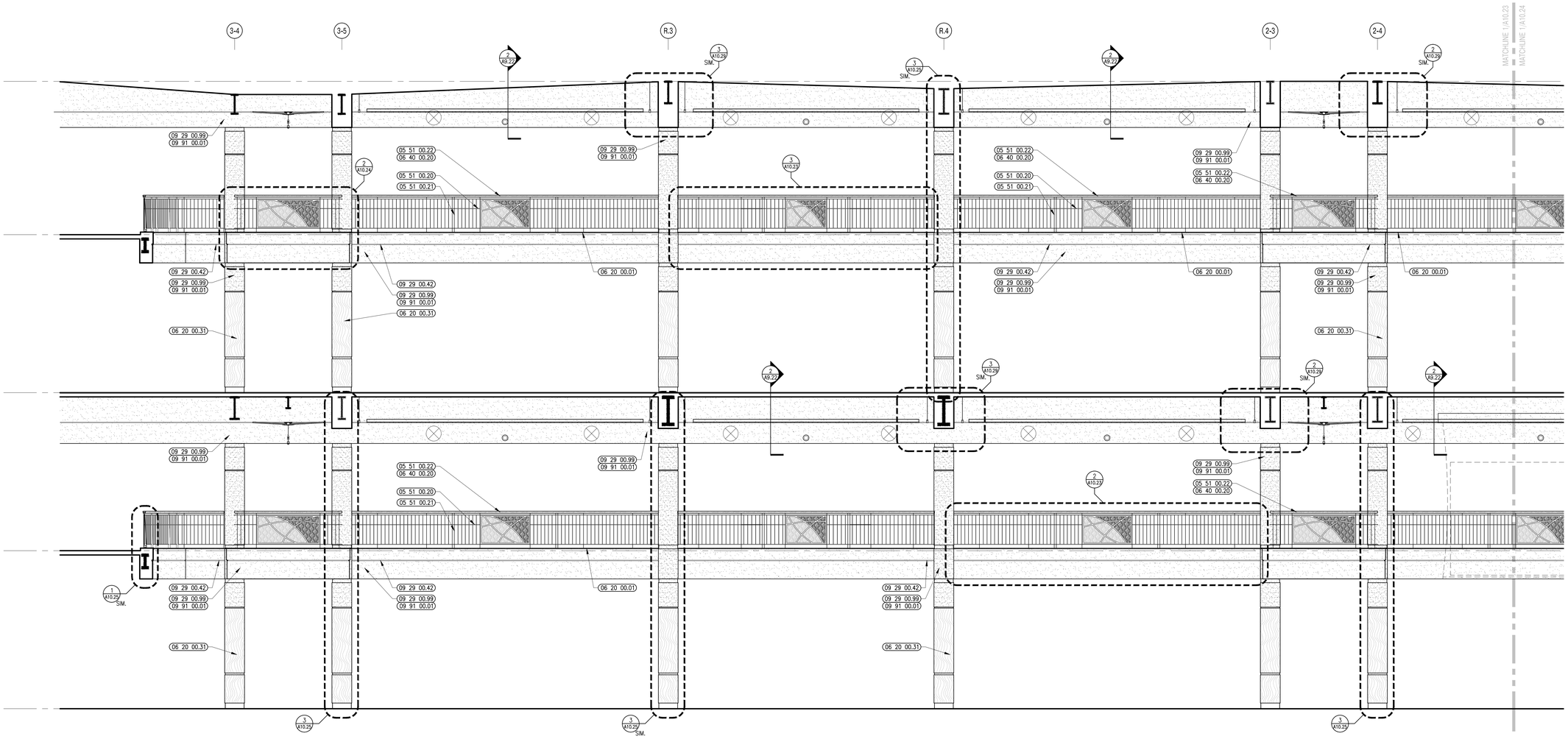

1 STUDENT DINING HANDRAIL ELEVATION
1/4" = 1'-0" DRAWN FLAT

526 Boston Post Rd Wayland, MA
508.358.0790 www.ai3architects.com

BEVERLY MIDDLE SCHOOL

CABOT STREET
BEVERLY, MA 01915

Copyright © 2016 AI3 Architects, LLC

KEYNOTE LEGEND: (REFERENCE SHEETS A0.01 & A0.02 FOR MASTER KEYNOTE LIST AND KEYNOTES NOT LISTED)

05 51 00.20	STEEL PIPE GUARDRAIL – 1–1/2 INCH O.D.
05 51 00.21	STEEL PIPE GUARDRAIL POST – 1–1/2 INCH O.D.
05 51 00.22	STEEL PIPE HANDRAIL – 1–1/2 INCH O.D.
05 51 00.32	STAINLESS STEEL INTERMEDIATE HANDRAIL WITH POSTS ANCHORED TO FLOOR
05 51 00.41	STEEL BAR – 1/2 INCH x 1/2 INCH
06 20 00.01	HARDWOOD MILLWORK – TRANSPARENT FINISH
06 20 00.23	HARDWOOD TRIM – 3/4 INCH – TRANSPARENT FINISH
06 20 00.31	HARDWOOD VENEER PLYWOOD – 1/2 INCH – TRANSPARENT FINISH
06 20 00.91	HARDWOOD HANDRAIL – TRANSPARENT FINISH
06 40 00.20	HARDWOOD TRIM – TRANSPARENT FINISH – SIZE AS DRAWN
09 29 00.42	REVEAL – PAINTABLE 3/4 INCH
09 29 00.99	GYPSUM BOARD SYSTEM – LEVEL 4 FINISH – REFER TO FLOOR PLANS AND WALL TYPES FOR COMPONENTS
09 91 00.01	PAINT – SEE SCHEDULE

GENERAL NOTES:

1. NOT ALL POWER AND DATA OUTLET/SWITCHING LOCATIONS SHOWN. COORDINATE WITH ELECTRICAL AND TECHNOLOGY DRAWINGS FOR ALL LOCATIONS.
2. REFER TO DETAIL 2/A7.31 FOR FIRE EXTINGUISHER DETAILS AND MOUNTING HEIGHTS.

90% CONSTRUCTION DOCUMENTS

NOT FOR CONSTRUCTION

NORTH ARROW

KEYPLAN

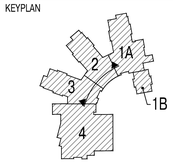

DRAWING NAME:

STUDENT DINING HANDRAIL ELEVATIONS

DRAWN BY:	MJR
REVIEWED BY:	MB
SCALE:	As Noted
JOB NO.:	1403.00
DATE:	July 25, 2016
DRAWING NUMBER:	A10.23

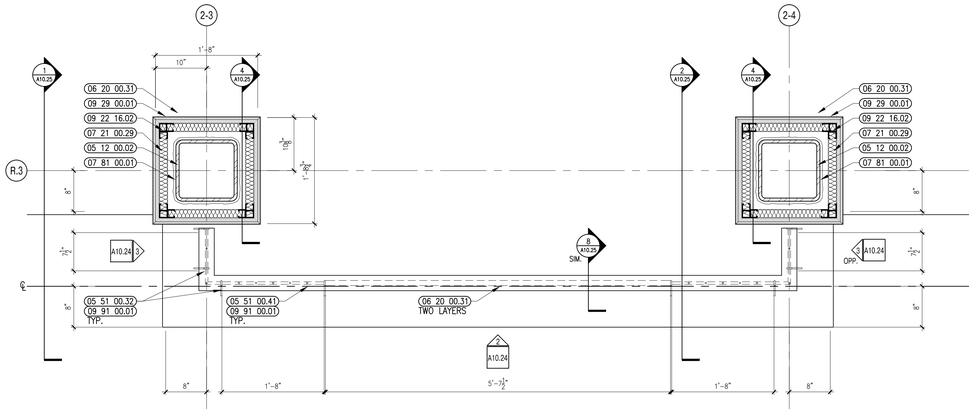

4 STUDENT DINING ENLARGED PLAN
1" = 1'-0"

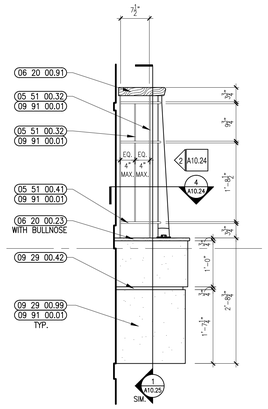

3 ENLARGED STUDENT DINING RAILING ELEVATION
3/4" = 1'-0"

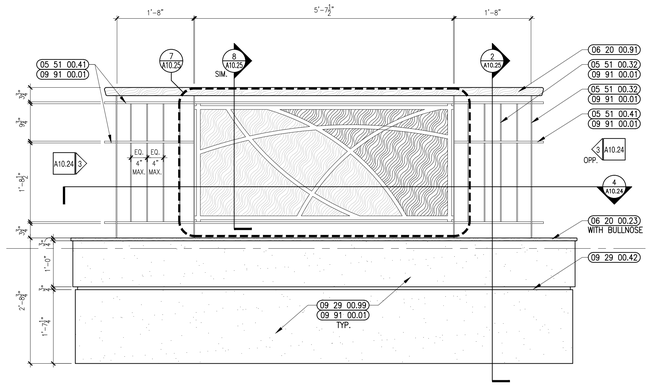

2 ENLARGED STUDENT DINING RAILING ELEVATION
3/4" = 1'-0"

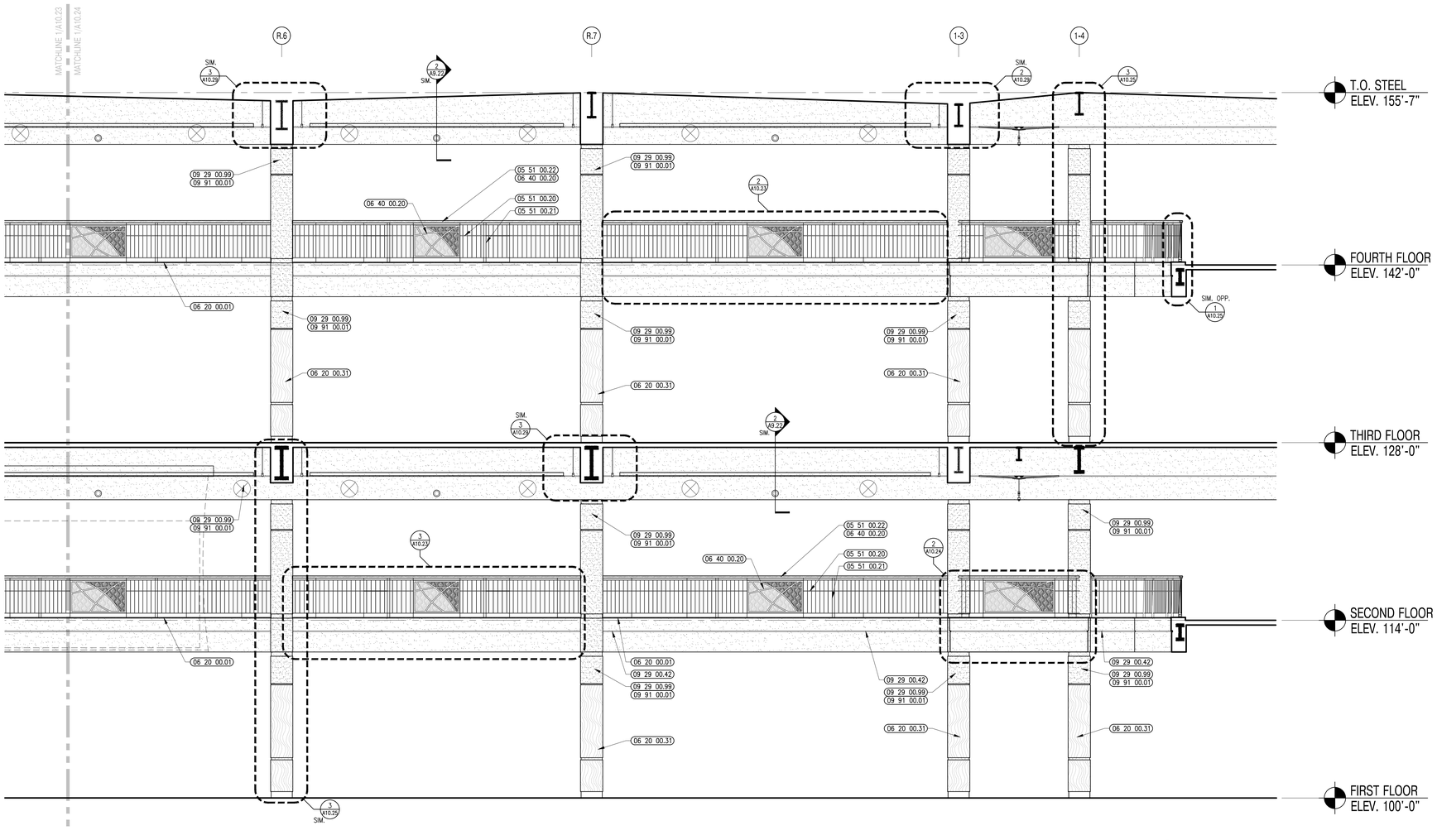

1 STUDENT DINING HANDRAIL ELEVATION
1/4" = 1'-0"

architects
526 Boston Post Rd Wayland, MA
508.358.0790 www.ai3architects.com

BEVERLY MIDDLE SCHOOL

CABOT STREET
BEVERLY, MA 01915

Copyright © 2016 Ai3 Architects, LLC

KEYNOTE LEGEND: (REFERENCE SHEETS A0.01 & A0.02 FOR MASTER KEYNOTE LIST AND KEYNOTES NOT LISTED)

05 12 00.02	STEEL COLUMN – SEE STRUCTURAL
05 51 00.20	STEEL PIPE GUARDRAIL – 1–1/2 INCH O.D.
05 51 00.21	STEEL PIPE GUARDRAIL POST – 1–1/2 INCH O.D.
05 51 00.22	STEEL PIPE HANDRAIL – 1–1/2 INCH O.D.
05 51 00.32	STAINLESS STEEL INTERMEDIATE HANDRAIL WITH POSTS ANCHORED TO FLOOR
05 51 00.41	STEEL BAR – 1/2 INCH x 1/2 INCH
06 20 00.01	HARDWOOD MILLWORK – TRANSPARENT FINISH
06 20 00.23	HARDWOOD TRIM – 3/4 INCH – TRANSPARENT FINISH
06 20 00.31	HARDWOOD VENEER PLYWOOD – 1/2 INCH – TRANSPARENT FINISH
06 20 00.91	HARDWOOD HANDRAIL – TRANSPARENT FINISH
06 40 00.20	HARDWOOD TRIM – TRANSPARENT FINISH – SIZE AS DRAWN
07 21 00.29	GLASS FIBER ACOUSTICAL BLANKET INSULATION – MATCH DEPTH OF STUD – UNFACED
07 81 00.01	CEMENTITIOUS FIREPROOFING
09 22 16.02	METAL STUD 2–1/2 INCH – 16 INCHES O.C. MAX
09 29 00.01	5/8 INCH GYPSUM BOARD – LEVEL 4 FINISH
09 29 00.42	REVEAL – PAINTABLE 3/4 INCH
09 29 00.99	GYPSUM BOARD SYSTEM – LEVEL 4 FINISH – REFER TO FLOOR PLANS AND WALL TYPES FOR COMPONENTS
09 91 00.01	PAINT – SEE SCHEDULE

GENERAL NOTES:

1. NOT ALL POWER AND DATA OUTLET/SWITCHING LOCATIONS SHOWN. COORDINATE WITH ELECTRICAL AND TECHNOLOGY DRAWINGS FOR ALL LOCATIONS.
2. REFER TO DETAIL X/AX.XX FOR FIRE EXTINGUISHER DETAILS AND MOUNTING HEIGHTS.

90% CONSTRUCTION DOCUMENTS

NOT FOR CONSTRUCTION

NORTH ARROW

KEYPLAN

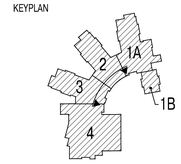

DRAWING NAME:

STUDENT DINING HANDRAIL ELEVATIONS

DRAWN BY:	MJR
REVIEWED BY:	BPH
SCALE:	As Noted
JOB NO.:	1403.00
DATE:	July 25, 2016
DRAWING NUMBER:	A10.24

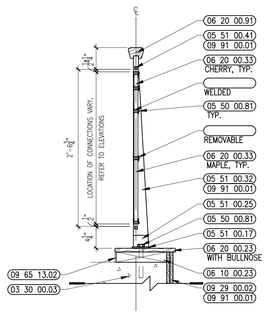

8 STUDENT DINING RAILING DETAIL
1" = 1'-0"

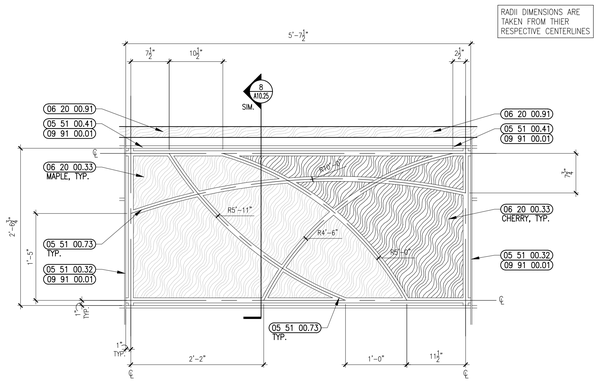

7 STUDENT DINING RAILING DETAIL
1" = 1'-0"

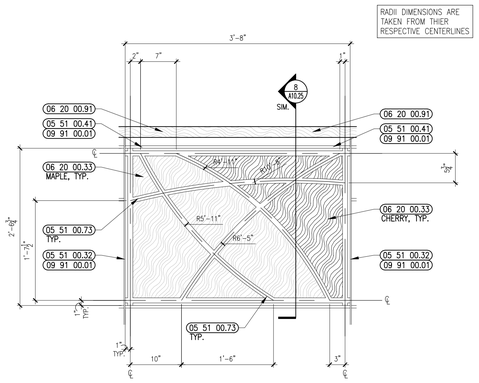

6 STUDENT DINING RAILING DETAIL
1" = 1'-0"

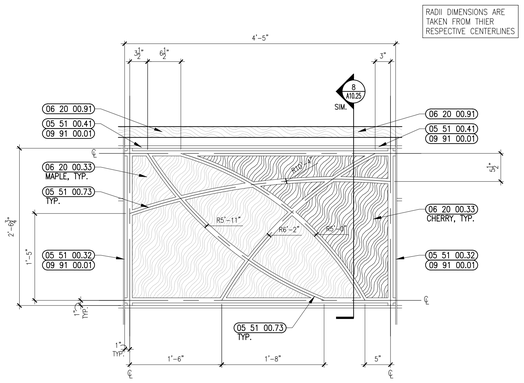

5 STUDENT DINING RAILING DETAIL
1" = 1'-0"

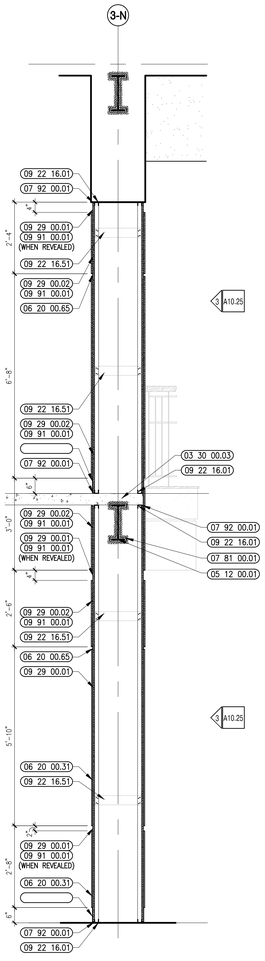

4 STUDENT DINING COLUMN SECTION
1/2" = 1'-0"

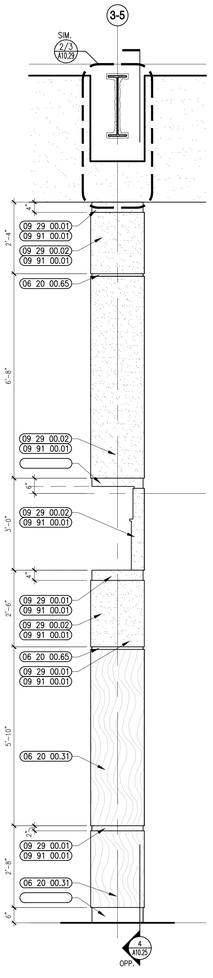

3 STUDENT DINING COLUMN ENLARGED ELEVATION
1/2" = 1'-0"

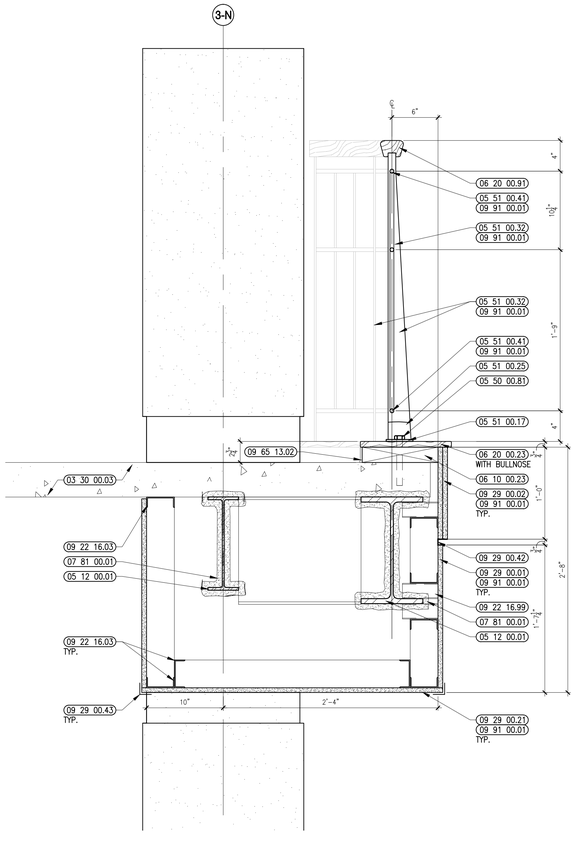

2 STUDENT DINING SOFFIT DETAIL
1-1/2" = 1'-0"

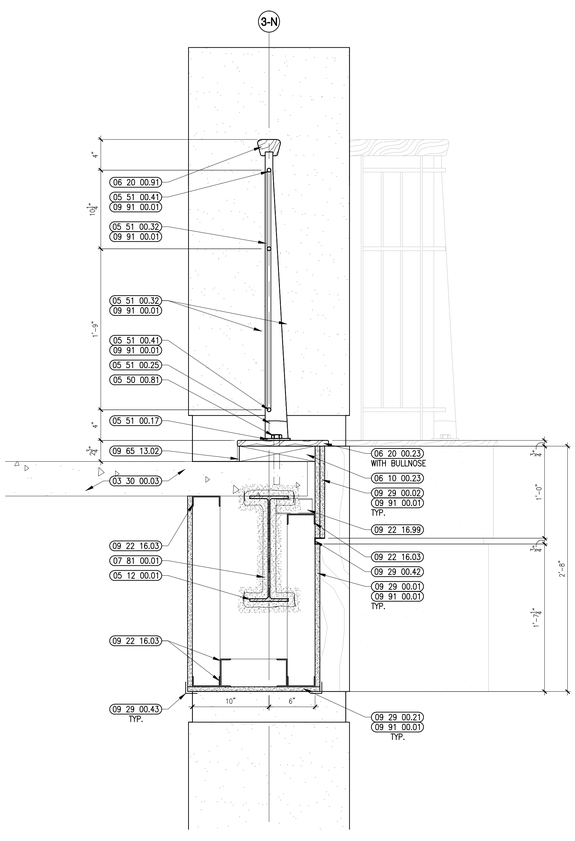

1 STUDENT DINING SOFFIT DETAIL
1-1/2" = 1'-0"

architects
526 Boston Post Rd Wayland, MA
508.358.0790 www.ai3architects.com

BEVERLY MIDDLE SCHOOL

CABOT STREET
BEVERLY, MA 01915

Copyright © 2016 A13 Architects, LLC

KEYNOTE LEGEND: (REFERENCE SHEETS A0.01 & A0.02 FOR MASTER KEYNOTE LIST AND KEYNOTES NOT LISTED)

03 30 00.03	CONCRETE SLAB ON DECK – SEE STRUCTURAL
05 12 00.01	STEEL BEAM – SEE STRUCTURAL
05 50 00.81	ANCHOR BOLT
05 51 00.17	STEEL PLATE – 1/4 INCH
05 51 00.25	STEEL HANDRAIL POST BRACKET
05 51 00.32	STAINLESS STEEL INTERMEDIATE HANDRAIL WITH POSTS ANCHORED TO FLOOR
05 51 00.41	STEEL BAR – 1/2 INCH x 1/2 INCH
05 51 00.73	METAL PANEL U–EDGING TRIM – 1 INCH – STAINLESS FINISH
06 10 00.23	WOOD BLOCKING – FIRE RETARDANT TREATED – SIZE AS NOTED OR DRAWN
06 20 00.23	HARDWOOD TRIM – 3/4 INCH – TRANSPARENT FINISH
06 20 00.31	HARDWOOD VENEER PLYWOOD – 1/2 INCH – TRANSPARENT FINISH
06 20 00.33	HARDWOOD VENEER PLYWOOD – 3/4 INCH – TRANSPARENT FINISH
06 20 00.65	BRUSHED STAINLESS FINISH ALUMINUM CHANNEL – 1 INCH
06 20 00.91	HARDWOOD HANDRAIL – TRANSPARENT FINISH
07 81 00.01	CEMENTITIOUS FIREPROOFING
07 92 00.01	JOINT SEALANT – TYPE AS REQUIRED
09 22 16.01	METAL STUD 1–5/8 INCH – 16 INCHES O.C. MAX
09 22 16.03	METAL STUD 3–5/8 INCH – 16 INCHES O.C. MAX
09 22 16.51	METAL STUD BRACE
09 22 16.99	METAL CLIP FOR WALL FRAMING – 16 GA. – 24 INCHES O.C. MAX
09 29 00.01	5/8 INCH GYPSUM BOARD – LEVEL 4 FINISH
09 29 00.02	5/8 INCH GYPSUM BOARD – 2 LAYERS – LEVEL 4 FINISH
09 29 00.21	5/8 INCH GYPSUM BOARD – SAG–RESISTANT – LEVEL 4 FINISH
09 29 00.42	REVEAL – PAINTABLE 3/4 INCH
09 29 00.43	METAL MOLDING – CORNER BEAD
09 65 13.02	RUBBER BASE – 2"
09 91 00.01	PAINT – SEE SCHEDULE

GENERAL NOTES:

1. NOT ALL POWER AND DATA OUTLET/SWITCHING LOCATIONS SHOWN. COORDINATE WITH ELECTRICAL AND TECHNOLOGY DRAWINGS FOR ALL LOCATIONS.
2. REFER TO DETAIL X/AX.XX FOR FIRE EXTINGUISHER DETAILS AND MOUNTING HEIGHTS.

90% CONSTRUCTION DOCUMENTS

NOT FOR CONSTRUCTION

NORTH ARROW

KEYPLAN

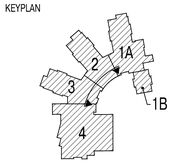

DRAWING NAME:

STUDENT DINING DETAILS & ENLARGED ELEVATIONS

DRAWN BY:	MJR
REVIEWED BY:	BPH
SCALE:	As Noted
JOB NO.:	1403.00
DATE:	July 25, 2016
DRAWING NUMBER:	A10.25

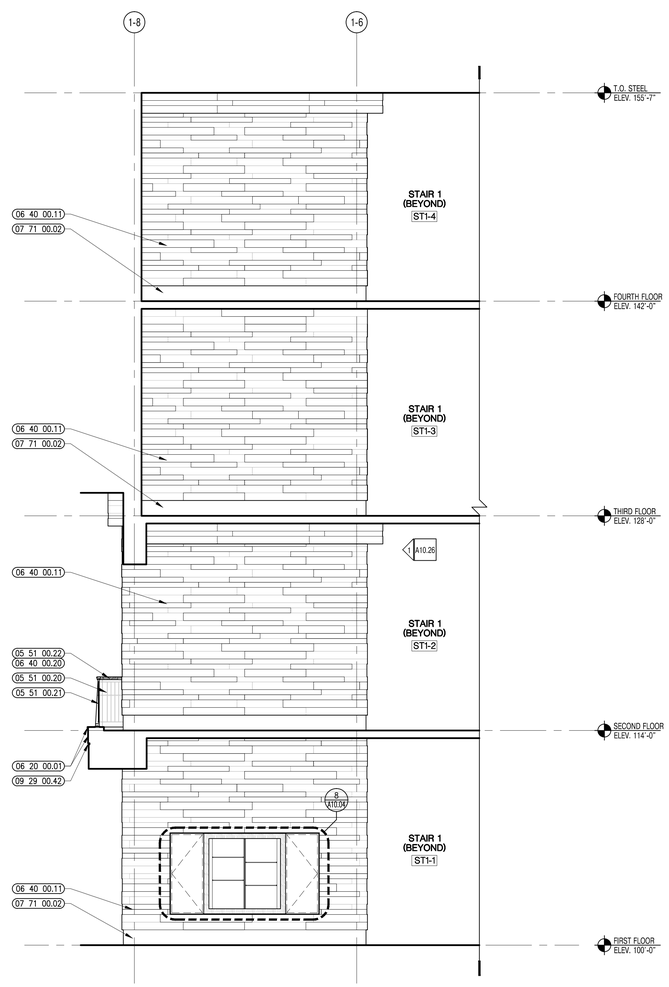

2 STUDENT DINING NORTH ACCENT WALL ELEVATION
1/4" = 1'-0"

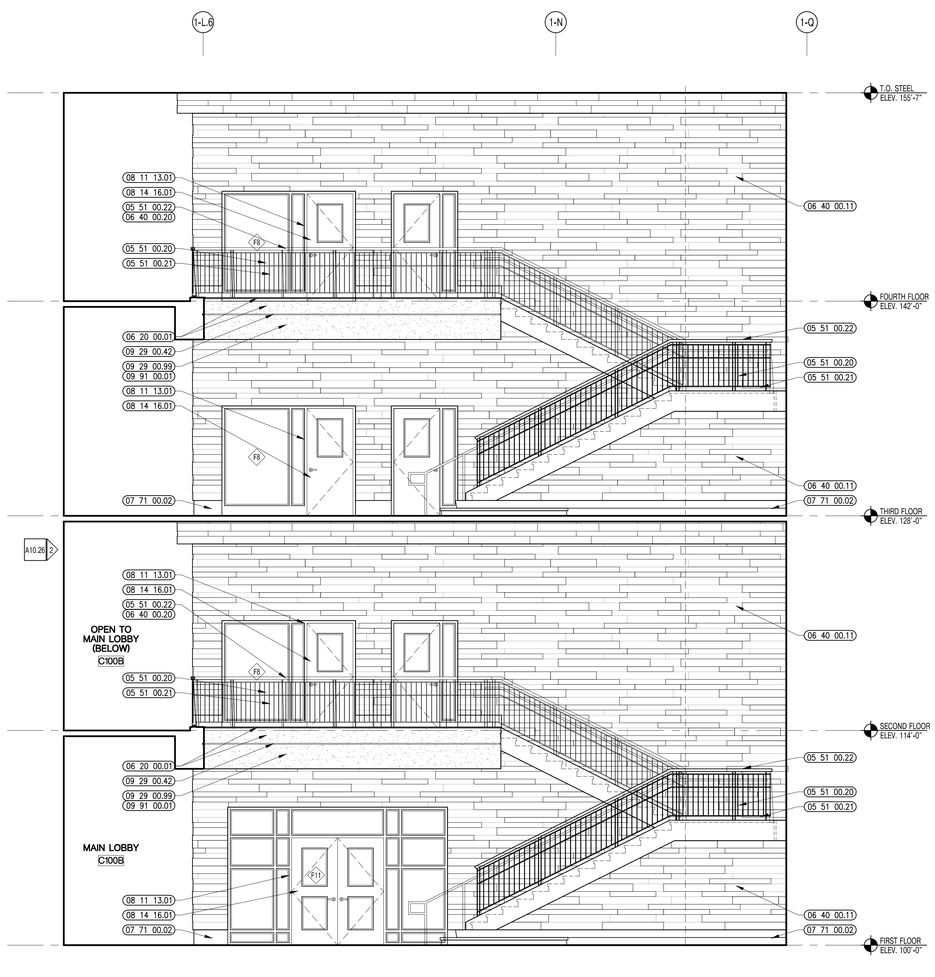

1 STUDENT DINING NORTH ACCENT WALL ELEVATION
1/4" = 1'-0"

526 Boston Post Rd Wayland, MA
508.358.0790 www.ai3architects.com

BEVERLY MIDDLE SCHOOL

CABOT STREET
BEVERLY, MA 01915

Copyright © 2016 Ai3 Architects, LLC

KEYNOTE LEGEND: (REFERENCE SHEETS A0.01 & A0.02 FOR MASTER KEYNOTE LIST AND KEYNOTES NOT LISTED)

05 51 00.20	STEEL PIPE GUARDRAIL – 1-1/2 INCH O.D.
05 51 00.21	STEEL PIPE GUARDRAIL POST – 1-1/2 INCH O.D.
05 51 00.22	STEEL PIPE HANDRAIL – 1-1/2 INCH O.D.
06 20 00.01	HARDWOOD MILLWORK – TRANSPARENT FINISH
06 40 00.11	3D WOOD WALL PANELS – MAPLE
06 40 00.20	HARDWOOD TRIM – TRANSPARENT FINISH – SIZE AS DRAWN
07 71 00.02	EXPOSED ALUMINUM FINISH METAL – CUSTOM COLOR
08 11 13.01	DOOR AND FRAME– SEE DOOR SCHEDULE
08 51 13.01	ALUMINUM WINDOW – SEE SCHEDULE
09 29 00.42	REVEAL – PAINTABLE 3/4 INCH
09 29 00.99	GYPSUM BOARD SYSTEM – LEVEL 4 FINISH – REFER TO FLOOR PLANS AND WALL TYPES FOR COMPONENTS
09 91 00.01	PAINT – SEE SCHEDULE

90% CONSTRUCTION DOCUMENTS

NOT FOR CONSTRUCTION

NORTH ARROW

KEYPLAN

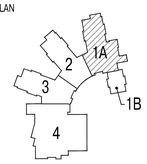

DRAWING NAME:

STUDENT DINING INTERIOR ELEVATIONS

DRAWN BY:	MJR
REVIEWED BY:	BPH
SCALE:	As Noted
JOB NO.:	1403.00
DATE:	July 25, 2016
DRAWING NUMBER:	A10.26

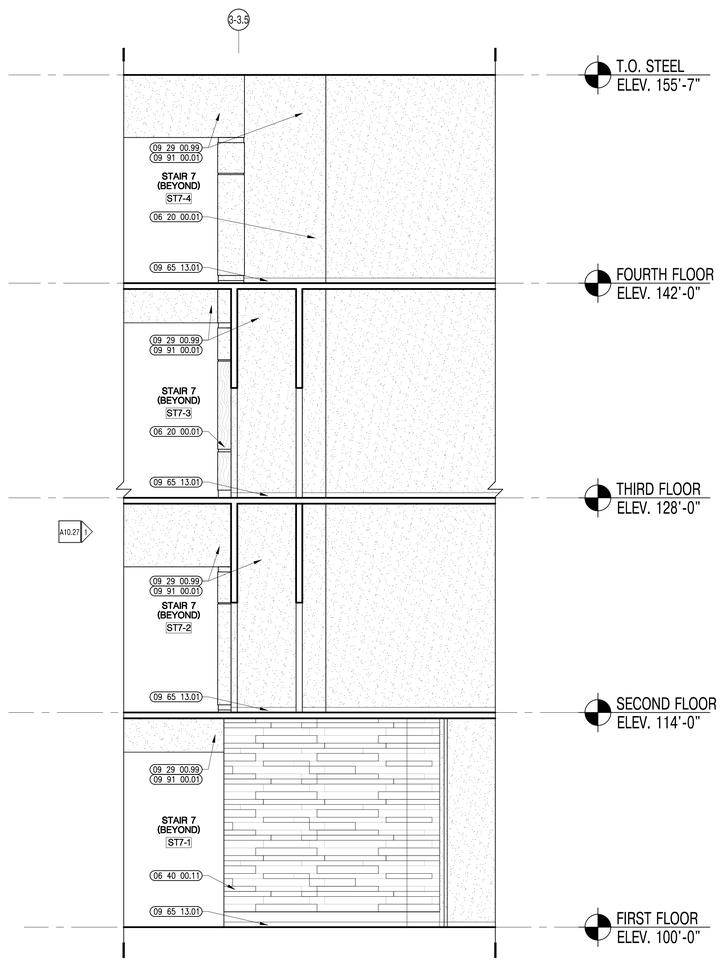

2 STUDENT DINING SOUTH ACCENT WALL ELEVATION
1/4" = 1'-0"

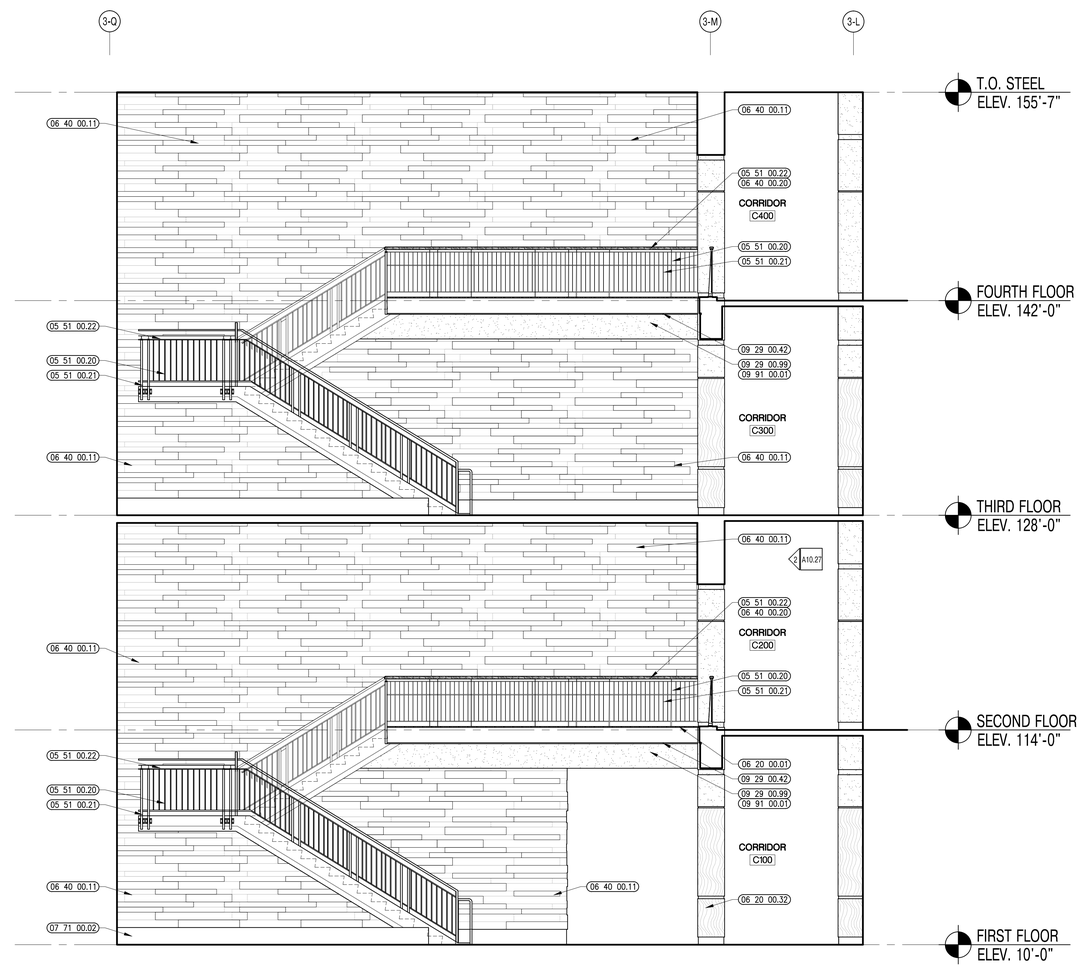

1 STUDENT DINING SOUTH ACCENT WALL ELEVATION
1/4" = 1'-0"

A13 architects
526 Boston Post Rd Wayland, MA
508.358.0790 www.a13architects.com

BEVERLY MIDDLE SCHOOL

CABOT STREET
BEVERLY, MA 01915

Copyright © 2016 A13 Architects, LLC

KEYNOTE LEGEND: (REFERENCE SHEETS A0.01 & A0.02 FOR MASTER KEYNOTE LIST AND KEYNOTES NOT LISTED)

05 51 00.20	STEEL PIPE GUARDRAIL – 1-1/2 INCH O.D.
05 51 00.21	STEEL PIPE GUARDRAIL POST – 1-1/2 INCH O.D.
05 51 00.22	STEEL PIPE HANDRAIL – 1-1/2 INCH O.D.
06 20 00.01	HARDWOOD MILLWORK – TRANSPARENT FINISH
06 20 00.32	HARDWOOD VENEER PLYWOOD – 5/8 INCH – TRANSPARENT FINISH
06 40 00.11	3D WOOD WALL PANELS – MAPLE
06 40 00.20	HARDWOOD TRIM – TRANSPARENT FINISH – SIZE AS DRAWN
07 71 00.02	EXPOSED ALUMINUM FINISH METAL – CUSTOM COLOR
09 29 00.42	REVEAL – PAINTABLE 3/4 INCH
09 29 00.99	GYPSUM BOARD SYSTEM – LEVEL 4 FINISH – REFER TO FLOOR PLANS AND WALL TYPES FOR COMPONENTS
09 65 13.01	RUBBER BASE – 4"
09 91 00.01	PAINT – SEE SCHEDULE

90% CONSTRUCTION DOCUMENTS

NOT FOR CONSTRUCTION

NORTH ARROW

KEYPLAN

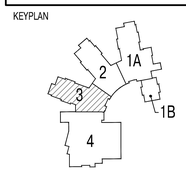

DRAWING NAME:

STUDENT DINING INTERIOR ELEVATIONS

DRAWN BY:	MJR
REVIEWED BY:	BPH
SCALE:	As Noted
JOB NO.:	1403.00
DATE:	July 25, 2016
DRAWING NUMBER:	A10.27

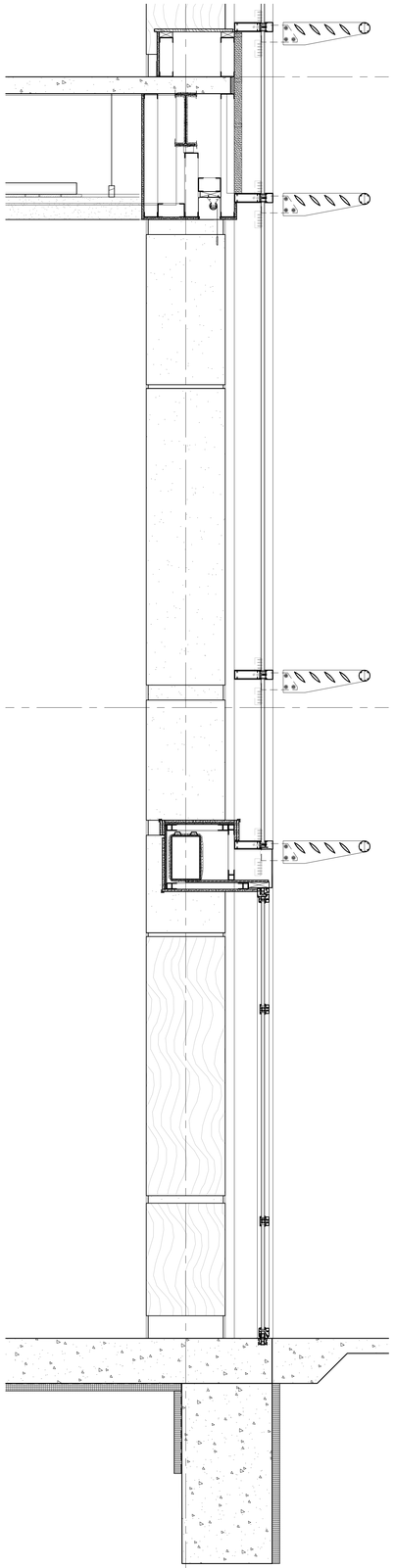

2 STUDENT DINING INTERIOR ELEVATION
3/4" = 1'-0"

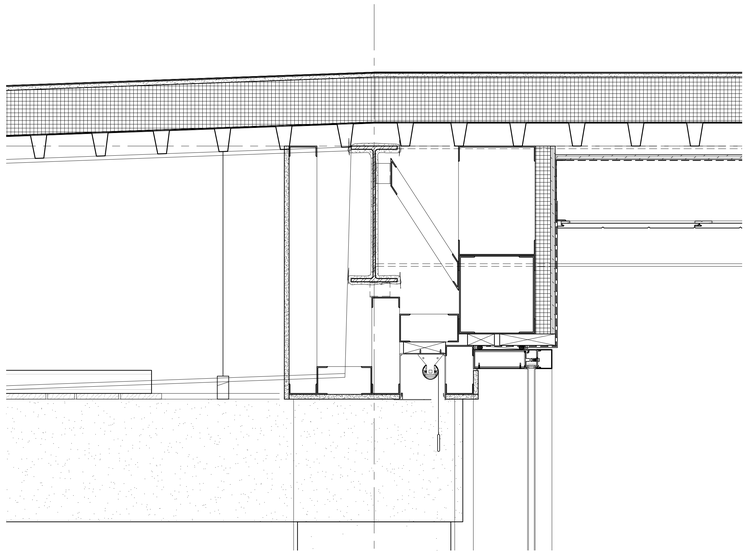

4 STUDENT DINING SOFFIT DETAIL
1-1/2" = 1'-0"

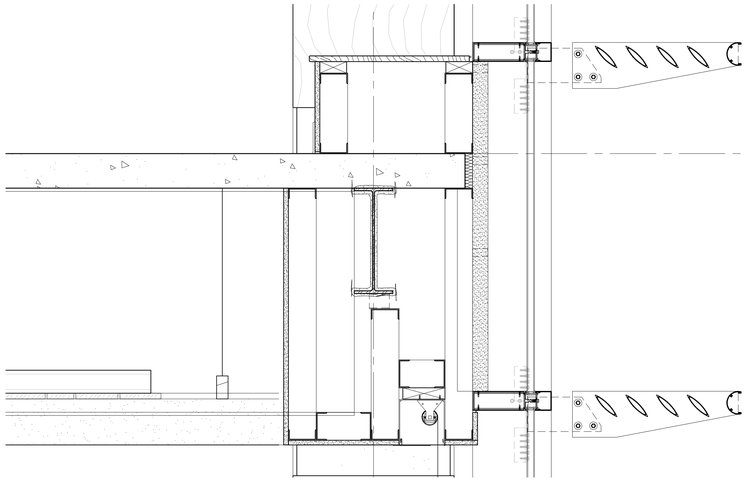

3 STUDENT DINING SOFFIT DETAIL
1-1/2" = 1'-0"

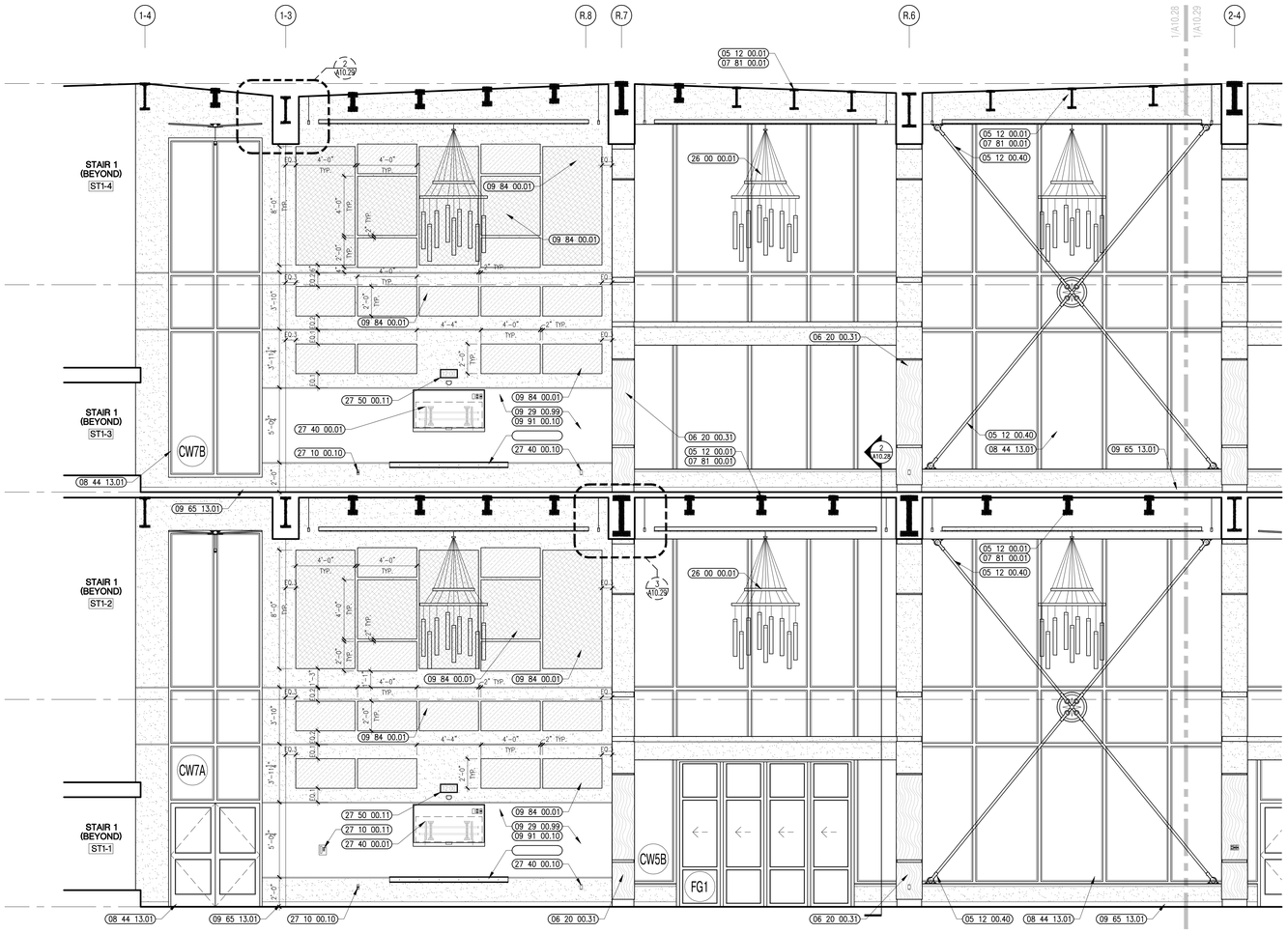

1 STUDENT DINING INTERIOR ELEVATION
1/4" = 1'-0"

526 Boston Post Rd Wayland, MA
508.358.0790 www.ai3architects.com

BEVERLY MIDDLE SCHOOL

CABOT STREET
BEVERLY, MA 01915

Copyright © 2016 - A13 Architects, LLC

KEYNOTE LEGEND: (REFERENCE SHEETS A0.01 & A0.02 FOR MASTER KEYNOTE LIST AND KEYNOTES NOT LISTED)

05 12 00.01	STEEL BEAM – SEE STRUCTURAL
05 12 00.40	BRACE FRAME – SEE STRUCTURAL
06 20 00.31	HARDWOOD VENEER PLYWOOD – 1/2 INCH – TRANSPARENT FINISH
07 81 00.01	CEMENTITIOUS FIREPROOFING
08 44 13.01	ALUMINUM CURTAIN WALL FRAME
09 29 00.99	GYPSUM BOARD SYSTEM – LEVEL 4 FINISH – REFER TO FLOOR PLANS AND WALL TYPES FOR COMPONENTS
09 65 13.01	RUBBER BASE – 4"
09 84 00.01	ACOUSTICAL PANEL – WALL MOUNTED – TYPE 1
09 91 00.10	DRY ERASE PAINT
26 00 00.01	LIGHT FIXTURE – SEE ELECTRICAL
27 10 00.10	DATA OUTLET – SEE TECHNOLOGY
27 10 00.11	TELEPHONE JACK – SEE TECHNOLOGY – TELEPHONE DEVICE TO BE OWNER FURNISHED AND INSTALLED
27 40 00.01	LCD TV – SEE TECHNOLOGY
27 40 00.10	FACE PLATE – SEE TECHNOLOGY
27 50 00.11	CLOCK – SEE TECHNOLOGY

90% CONSTRUCTION DOCUMENTS

NOT FOR CONSTRUCTION

NORTH ARROW

KEYPLAN

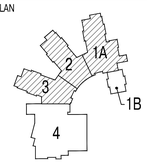

DRAWING NAME:

STUDENT DINING INTERIOR ELEVATIONS

DRAWN BY:	MJR/ RPM
REVIEWED BY:	BPH
SCALE:	As Noted
JOB NO.:	1403.00
DATE:	July 25, 2016
DRAWING NUMBER:	A10.28

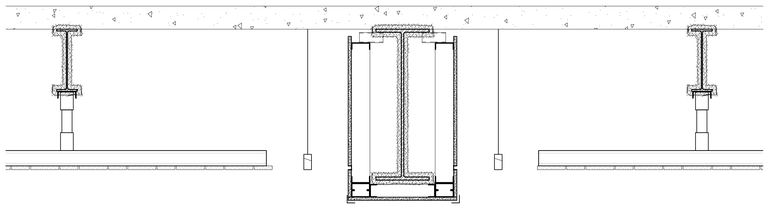

3 STUDENT DINING SOFFIT DETAIL
1" = 1'-0"

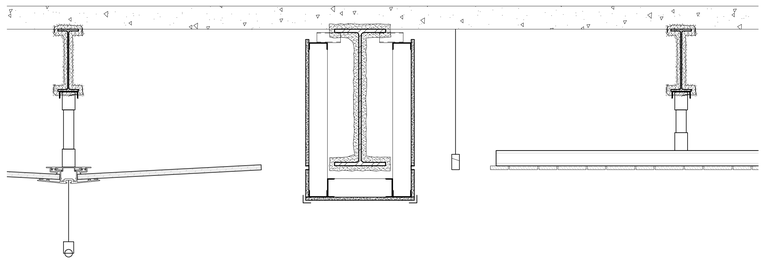

2 STUDENT DINING SOFFIT DETAIL
1" = 1'-0"

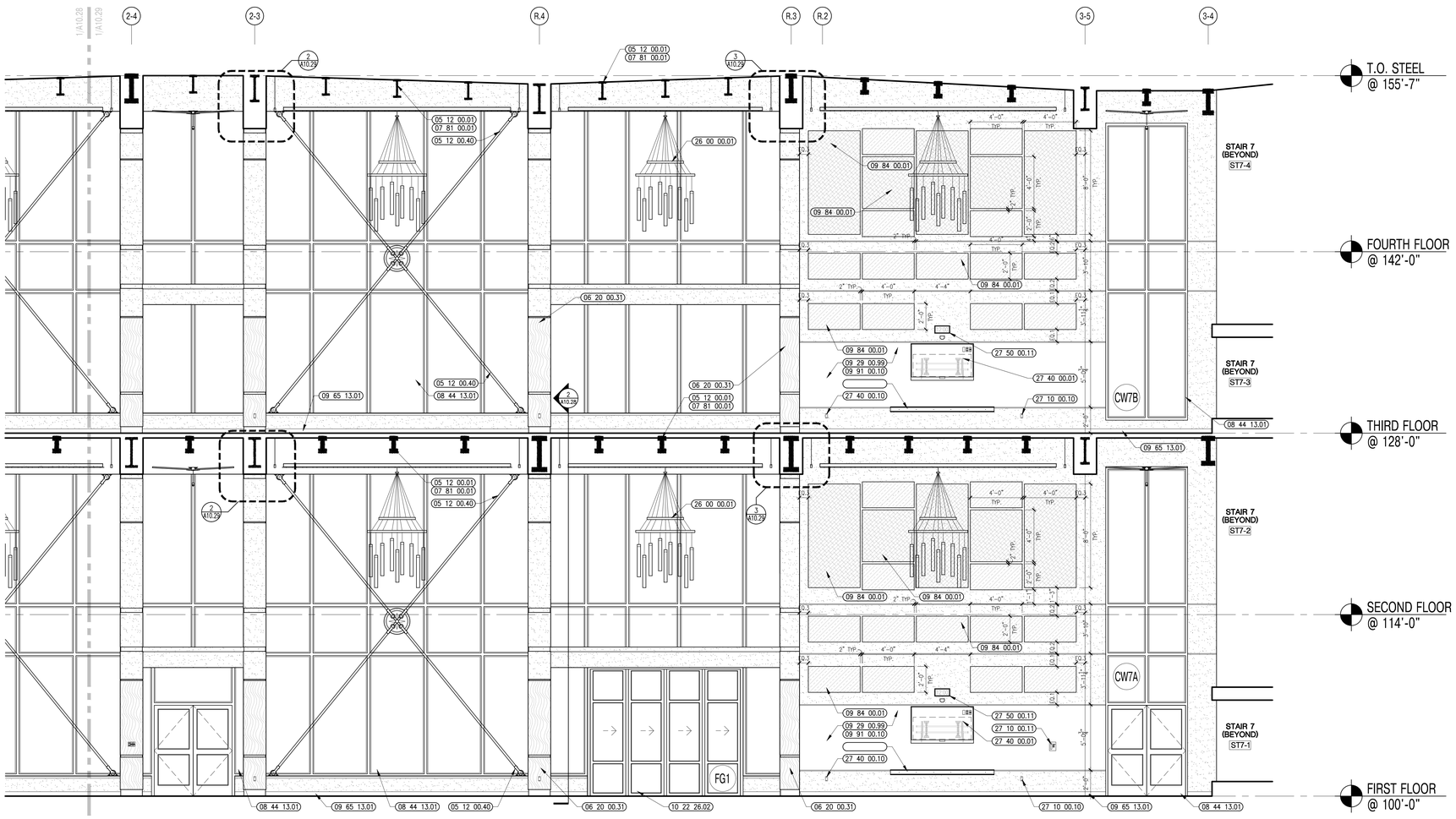

1 STUDENT DINING INTERIOR ELEVATION
1/4" = 1'-0"

526 Boston Post Rd Wayland, MA
508.358.0790 www.ai3architects.com

BEVERLY MIDDLE SCHOOL

CABOT STREET
BEVERLY, MA 01915

Copyright © 2016 Ai3 Architects, LLC

KEYNOTE LEGEND: (REFERENCE SHEETS A0.01 & A0.02 FOR MASTER KEYNOTE LIST AND KEYNOTES NOT LISTED)

05 12 00.01	STEEL BEAM – SEE STRUCTURAL
05 12 00.40	BRACE FRAME – SEE STRUCTURAL
06 20 00.31	HARDWOOD VENEER PLYWOOD – 1/2 INCH – TRANSPARENT FINISH
07 81 00.01	CEMENTITIOUS FIREPROOFING
08 44 13.01	ALUMINUM CURTAIN WALL FRAME
09 29 00.99	GYPSUM BOARD SYSTEM – LEVEL 4 FINISH – REFER TO FLOOR PLANS AND WALL TYPES FOR COMPONENTS
09 65 13.01	RUBBER BASE – 4"
09 84 00.01	ACOUSTICAL PANEL – WALL MOUNTED – TYPE 1
09 91 00.10	DRY ERASE PAINT
10 22 26.02	EXTERIOR OPERABLE GLASS PARTITION PANEL
26 00 00.01	LIGHT FIXTURE – SEE ELECTRICAL
27 10 00.10	DATA OUTLET – SEE TECHNOLOGY
27 10 00.11	TELEPHONE JACK – SEE TECHNOLOGY – TELEPHONE DEVICE TO BE OWNER FURNISHED AND INSTALLED
27 40 00.01	LCD TV – SEE TECHNOLOGY
27 40 00.10	FACE PLATE – SEE TECHNOLOGY
27 50 00.11	CLOCK – SEE TECHNOLOGY

90% CONSTRUCTION DOCUMENTS

NOT FOR CONSTRUCTION

NORTH ARROW

KEYPLAN

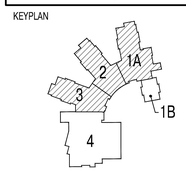

DRAWING NAME:

STUDENT DINING INTERIOR ELEVATIONS

DRAWN BY:	MJR
REVIEWED BY:	BPH
SCALE:	As Noted
JOB NO.:	1403.00
DATE:	July 25, 2016
DRAWING NUMBER:	A10.29

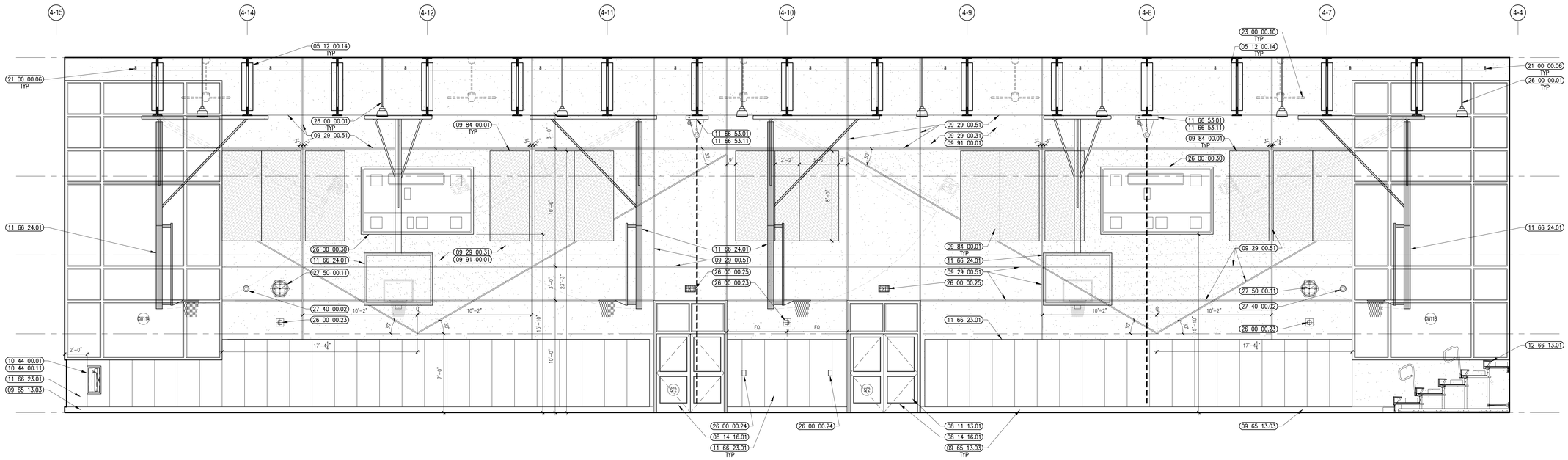

2 GYMNASIUM INTERIOR ELEVATION
1/4" = 1'-0"

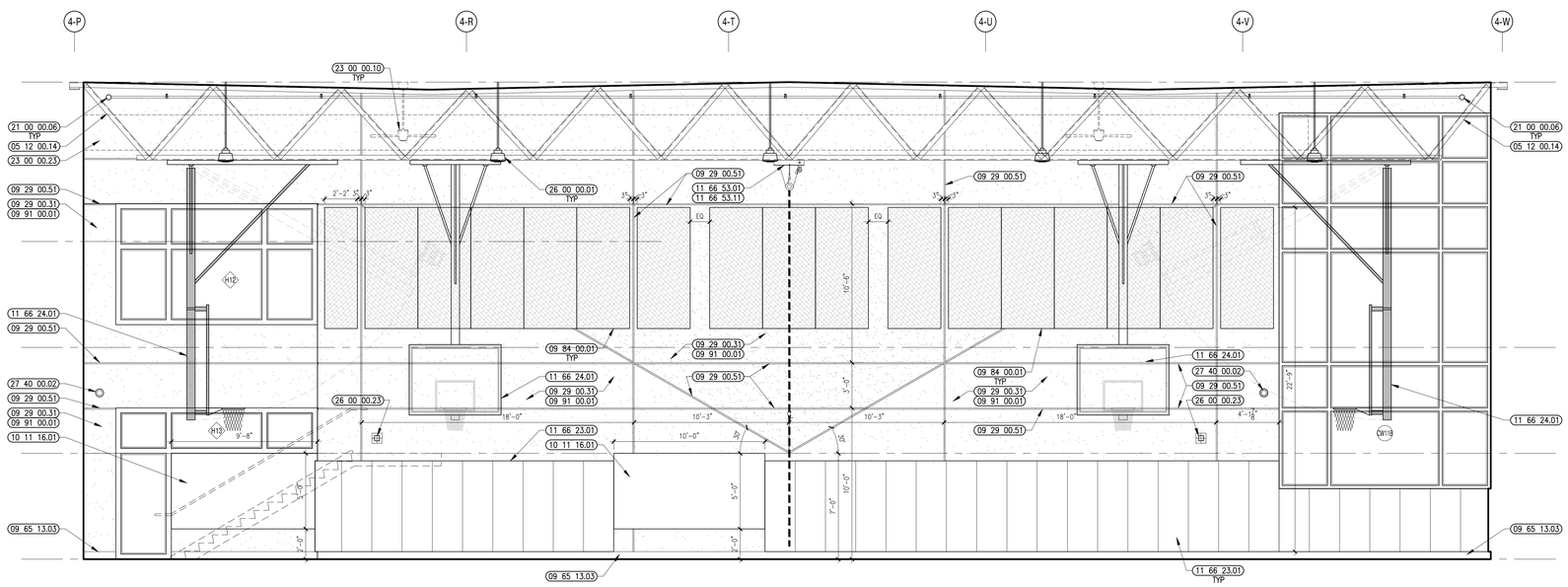

1 GYMNASIUM INTERIOR ELEVATION
1/4" = 1'-0"

A13 architects
526 Boston Post Rd Wayland, MA
508.358.0790 www.a13architects.com

BEVERLY MIDDLE SCHOOL

CABOT STREET
BEVERLY, MA 01915

Copyright © 2016 A13 Architects, LLC

KEYNOTE LEGEND:

(REFERENCE SHEETS A0.01 & A0.02 FOR MASTER KEYNOTE LIST AND KEYNOTES NOT LISTED)

05 12 00.14	STEEL TRUSS – SEE STRUCTURAL
08 11 13.01	DOOR AND FRAME– SEE DOOR SCHEDULE
08 14 16.01	SOLID CORE FLUSH WOOD DOOR– SEE DOOR SCHEDULE
09 29 00.31	5/8 INCH GYPSUM BOARD – IMPACT RESISTANT – LEVEL 4 FINISH
09 29 00.51	ALUMINUM REVEAL TRIM – SATIN FINISH – 1 INCH
09 65 13.03	RUBBER BASE – 4"
09 84 00.01	ACOUSTICAL PANEL – WALL MOUNTED – TYPE 1
09 91 00.01	PAINT – SEE SCHEDULE
10 11 16.01	DRY MARKER BOARD
10 44 00.01	FIRE EXTINGUISHER CABINET – FULLY RECESSED
10 44 00.11	FIRE EXTINGUISHER
11 66 23.01	WALL PADDING – TYPE 1
11 66 24.01	BACKSTOP – FORWARD FOLDING – ADJUSTABLE CEILING MOUNTED – ELECTRIC OPERATED
11 66 53.01	ROLL-FOLD DIVIDER CURTAIN – OVERHEAD SUPPORTED
11 66 53.11	DIVIDER CURTAIN MOTOR
12 66 13.01	TELESCOPING POWER ASSISTED WOOD BLEACHERS
21 00 00.06	SPRINKLER PIPE
23 00 00.10	FAN – SEE HVAC
23 00 00.23	DUCT – SEE HVAC
26 00 00.01	LIGHT FIXTURE – SEE ELECTRICAL
26 00 00.23	FIRE ALARM AUDIO/VISUAL UNIT – SEE ELECTRICAL
26 00 00.24	FIRE ALARM PULL – SEE ELECTRICAL
26 00 00.25	EXIT SIGN – SEE ELECTRICAL
26 00 00.30	SCOREBOARD – SEE ELECTRICAL
27 40 00.02	CAMERA – SEE TECHNOLOGY
27 50 00.11	CLOCK – SEE TECHNOLOGY

GENERAL NOTES:

1. NOT ALL POWER & DATA OUTLET/SWITCHING LOCATIONS SHOWN. CONTRACTOR TO REFER TO ELECTRICAL AND TECHNOLOGY DRAWINGS FOR LOCATIONS.
2. REFER TO DRAWING 2/A7.31 FOR FIRE EXTINGUISHER MOUNTING HEIGHTS.
3. BEHIND ALL WALL PADS & BLEACHERS, PROVIDE (2) LAYERS OF 3/4" PLYWOOD (09 29 00.09), IN PLACE OF (1) LAYER OF PLYWOOD & (1) LAYER OF GYPSUM WALLBOARD, FROM FINISH FLOOR TO 6'-0" A.F.F.
4. REFER TO 3/A7.31 FOR 101116.01 EDGE DETAILS, TYP.

90% CONSTRUCTION DOCUMENTS

NOT FOR CONSTRUCTION

NORTH ARROW

KEYPLAN

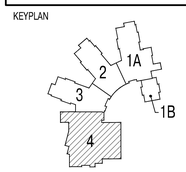

DRAWING NAME:

GYMNASIUM INTERIOR ELEVATIONS

DRAWN BY:	MJR / JMR
REVIEWED BY:	BPH
SCALE:	As Noted
JOB NO.:	1403.00
DATE:	July 25, 2016
DRAWING NUMBER:	A10.31

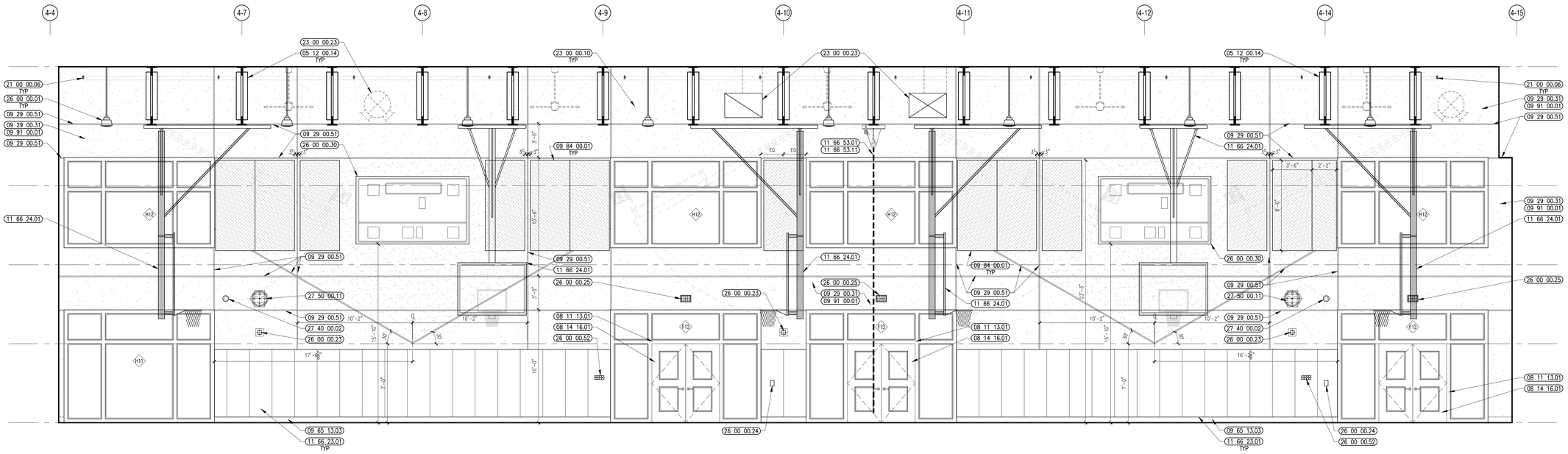

2 GYMNASIUM INTERIOR ELEVATION
1/4" = 1'-0"

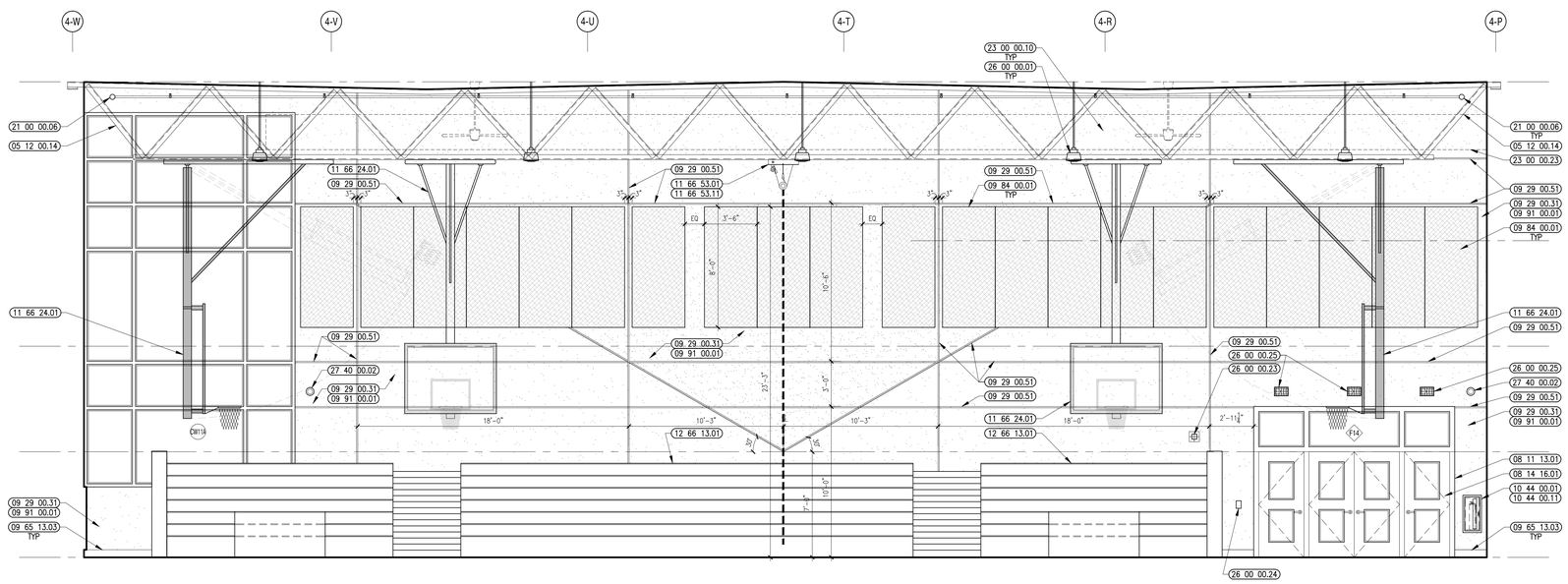

1 GYMNASIUM INTERIOR ELEVATION
1/4" = 1'-0"

architects
526 Boston Post Rd Wayland, MA
508.358.0790 www.ai3architects.com

BEVERLY MIDDLE SCHOOL

CABOT STREET
BEVERLY, MA 01915

Copyright © 2016 Ai3 Architects, LLC

KEYNOTE LEGEND: (REFERENCE SHEETS A0.01 & A0.02 FOR MASTER KEYNOTE LIST AND KEYNOTES NOT LISTED)

05 12 00.14	STEEL TRUSS – SEE STRUCTURAL
08 11 13.01	DOOR AND FRAME– SEE DOOR SCHEDULE
08 14 16.01	SOLID CORE FLUSH WOOD DOOR– SEE DOOR SCHEDULE
09 29 00.31	5/8 INCH GYPSUM BOARD – IMPACT RESISTANT – LEVEL 4 FINISH
09 29 00.51	ALUMINUM REVEAL TRIM – SATIN FINISH – 1 INCH
09 65 13.03	RUBBER BASE – 6"
09 84 00.01	ACOUSTICAL PANEL – WALL MOUNTED – TYPE 1
09 91 00.01	PAINT – SEE SCHEDULE
10 44 00.01	FIRE EXTINGUISHER CABINET – FULLY RECESSED
10 44 00.11	FIRE EXTINGUISHER
11 66 23.01	WALL PADDING – TYPE 1
11 66 24.01	BACKSTOP – FORWARD FOLDING – ADJUSTABLE CEILING MOUNTED – ELECTRIC OPERATED
11 66 53.01	ROLL-FOLD DIVIDER CURTAIN – OVERHEAD SUPPORTED
11 66 53.11	DIVIDER CURTAIN MOTOR
12 66 13.01	TELESCOPING POWER ASSISTED WOOD BLEACHERS
21 00 00.06	SPRINKLER PIPE
23 00 00.10	FAN – SEE HVAC
23 00 00.23	DUCT – SEE HVAC
26 00 00.01	LIGHT FIXTURE – SEE ELECTRICAL
26 00 00.23	FIRE ALARM AUDIO/VISUAL UNIT – SEE ELECTRICAL
26 00 00.24	FIRE ALARM PULL – SEE ELECTRICAL
26 00 00.25	EXIT SIGN – SEE ELECTRICAL
26 00 00.30	SCOREBOARD – SEE ELECTRICAL
26 00 00.52	LIGHT SWITCH – SEE ELECTRICAL
27 40 00.02	CAMERA – SEE TECHNOLOGY
27 50 00.11	CLOCK – SEE TECHNOLOGY

GENERAL NOTES:

1. NOT ALL POWER & DATA OUTLET/SWITCHING LOCATIONS SHOWN. CONTRACTOR TO REFER TO ELECTRICAL AND TECHNOLOGY DRAWINGS FOR LOCATIONS.

2. REFER TO DRAWING 2/A7.31 FOR FIRE EXTINGUISHER MOUNTING HEIGHTS.

3. BEHIND ALL WALL PADS & BLEACHERS, PROVIDE (2) LAYERS OF ¾" PLYWOOD (09 29 00.09), IN PLACE OF (1) LAYER OF PLYWOOD & (1) LAYER OF GYPSUM WALLBOARD, FROM FINISH FLOOR TO 6'-0" A.F.F.

90% CONSTRUCTION DOCUMENTS

NOT FOR CONSTRUCTION

NORTH ARROW

KEYPLAN

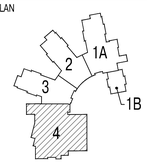

DRAWING NAME:

GYMNASIUM INTERIOR ELEVATIONS

DRAWN BY:	MJR / JMR
REVIEWED BY:	BPH
SCALE:	As Noted
JOB NO.:	1403.00
DATE:	July 25, 2016
DRAWING NUMBER:	A10.32

526 Boston Post Rd Wayland, MA
508.358.0790 www.ai3architects.com

BEVERLY MIDDLE SCHOOL

CABOT STREET
BEVERLY, MA 01915

Copyright © 2016 Ai3 Architects, LLC

KEYNOTE LEGEND: (REFERENCE SHEETS A0.01 & A0.02 FOR MASTER KEYNOTE LIST AND KEYNOTES NOT LISTED)

07 21 00.29	GLASS FIBER ACOUSTICAL BLANKET INSULATION – MATCH DEPTH OF STUD – UNFACED
08 11 13.01	DOOR AND FRAME– SEE DOOR SCHEDULE
08 14 16.01	SOLID CORE FLUSH WOOD DOOR– SEE DOOR SCHEDULE
09 22 16.03	METAL STUD 3–5/8 INCH – 16 INCHES O.C. MAX
09 22 16.51	METAL STUD BRACE
09 29 00.21	5/8 INCH GYPSUM BOARD – SAG–RESISTANT – LEVEL 4 FINISH
09 29 00.31	5/8 INCH GYPSUM BOARD – IMPACT RESISTANT – LEVEL 4 FINISH
09 29 00.43	CORNER BEAD
09 29 00.99	GYPSUM BOARD SYSTEM – LEVEL 4 FINISH – REFER TO FLOOR PLANS AND WALL TYPES FOR COMPONENTS
09 51 00.51	ACT SUSPENSION SYSTEM
09 51 00.52	PERIMETER EDGE TRIM SYSTEM
09 51 00.99	ACOUSTICAL CEILING – REFERENCE REFLECTED CEILING PLANS FOR TYPE AND HEIGHT
09 65 13.01	RUBBER BASE – 4"
09 91 00.01	PAINT – SEE SCHEDULE
10 11 16.01	DRY MARKER BOARD
10 11 16.05	MIRROR – FRAMELESS
10 11 16.21	DRY ERASE H–BAR SPLICE
10 14 00.01	INTERIOR SIGNAGE – TYPE AS SCHEDULED
10 44 00.03	FIRE EXTINGUISHER WALL MOUNTED BRACKET
10 44 00.11	FIRE EXTINGUISHER
22 00 00.03	WATER FOUNTAIN – SEE PLUMBING
27 10 00.11	TELEPHONE JACK – SEE TECHNOLOGY – TELEPHONE DEVICE TO BE OWNER FURNISHED AND INSTALLED
27 50 00.11	CLOCK – SEE TECHNOLOGY
27 70 00.01	TV – FLAT SCREEN – SEE TECHNOLOGY

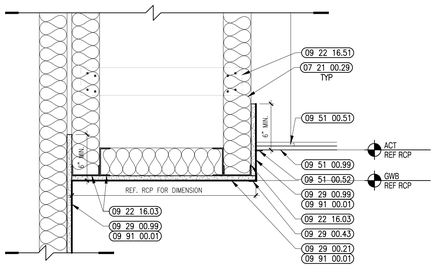

5 SOFFIT DETAIL
1 1/2" = 1'–0"

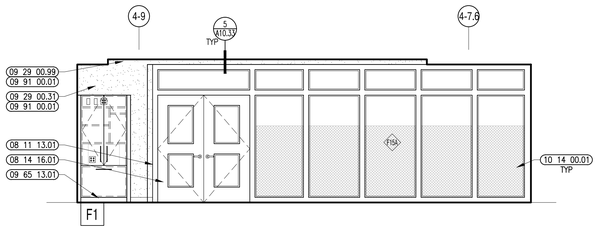

2 HEALTH INTERIOR ELEVATION
1/4" = 1'–0"

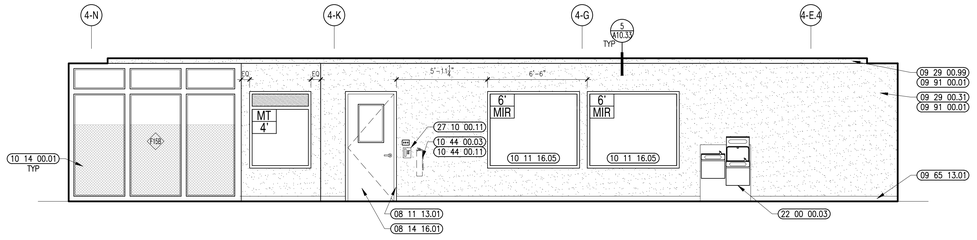

4 HEALTH INTERIOR ELEVATION
1/4" = 1'–0"

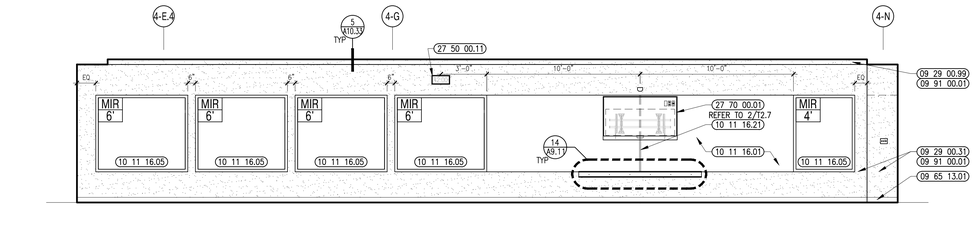

3 HEALTH INTERIOR ELEVATION
1/4" = 1'–0"

1 HEALTH INTERIOR ELEVATION
1/4" = 1'–0"

GENERAL NOTES:

1. NOT ALL POWER & DATA OUTLET/SWITCHING LOCATIONS SHOWN. CONTRACTOR TO REFER TO ELECTRICAL AND TECHNOLOGY DRAWINGS FOR LOCATIONS.
2. REFER TO DRAWING 2/A7.31 FOR FIRE EXTINGUISHER MOUNTING HEIGHTS.
3. REFER TO 3/A7.31 FOR 101116.01 EDGE DETAILS, TYP.

90% CONSTRUCTION DOCUMENTS

NOT FOR CONSTRUCTION

NORTH ARROW

KEYPLAN

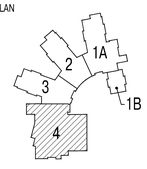

DRAWING NAME:

HEALTH CLASSROOM INTERIOR ELEVATIONS

DRAWN BY:	JMR
REVIEWED BY:	BPH
SCALE:	As Noted
JOB NO.:	1403.00
DATE:	July 25, 2016
DRAWING NUMBER:	A10.33

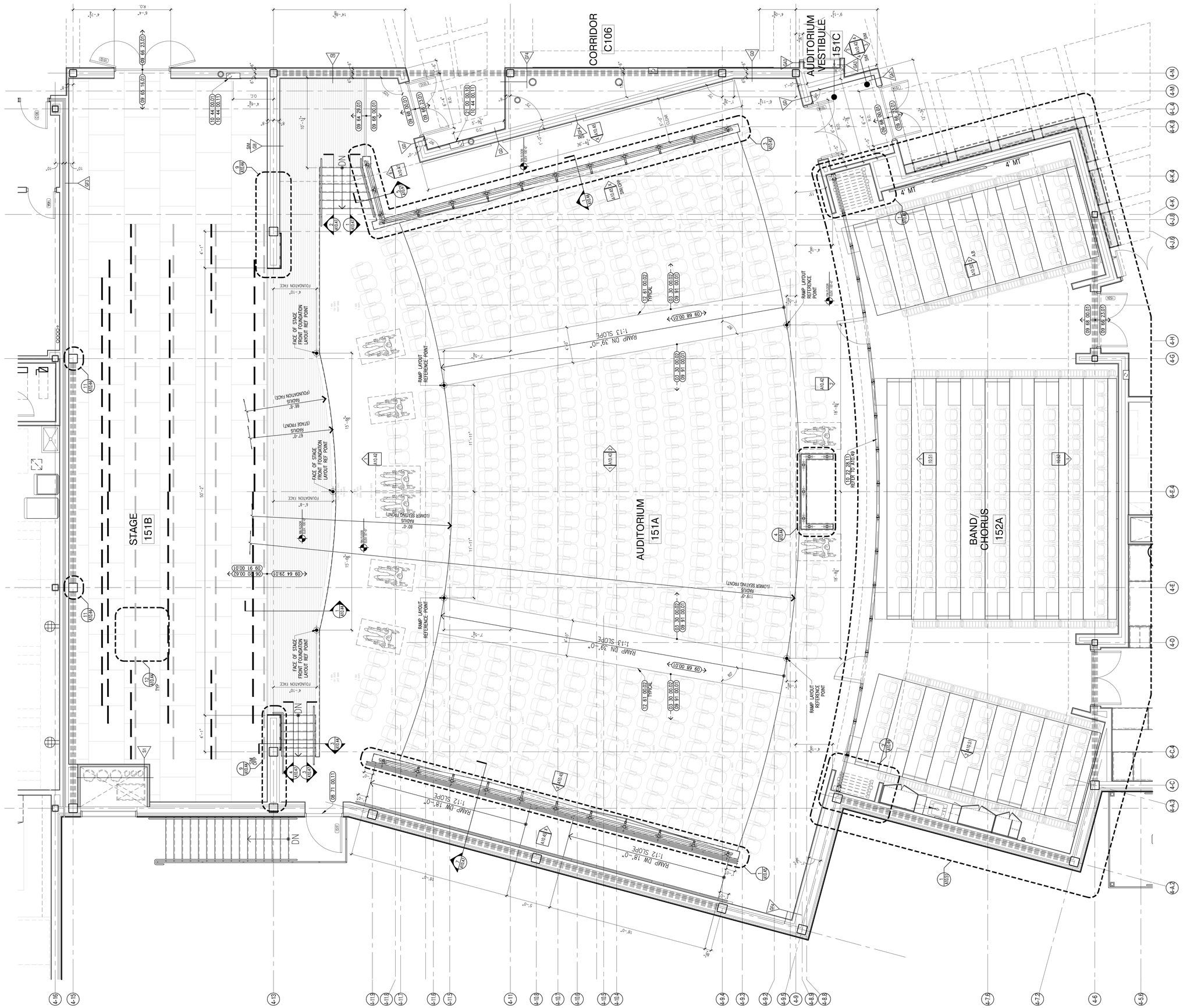

1 AUDITORIUM ENLARGED PLAN
1/4" = 1'-0"

architects
526 Boston Post Rd Wayland, MA
508.358.0790 www.ai3architects.com

BEVERLY MIDDLE SCHOOL

CABOT STREET
BEVERLY, MA 01915

Copyright © 2016 Ai3 Architects, LLC

KEYNOTE LEGEND: (REFERENCE SHEETS A0.01 & A0.02 FOR MASTER KEYNOTE LIST AND KEYNOTES NOT LISTED)

03 30 00.02	CONCRETE SLAB ON GRADE – SEE STRUCTURAL
06 20 00.62	HARDBOARD STAGE FLOORING
08 71 00.11	ALUMINUM THRESHOLD
09 64 29.01	WOOD STRIP AND PLANK FLOOR
09 65 16.01	RESILIENT SHEET VINYL FLOORING
09 66 23.01	RESINOUS MATRIX TERRAZZO FLOORING
09 68 00.01	CARPET
09 91 00.01	PAINT – SEE SCHEDULE
10 22 28.11	MOTORIZED FOLDING PANEL PARTITION
10 44 00.01	FIRE EXTINGUISHER CABINET – FULLY RECESSED
10 44 00.11	FIRE EXTINGUISHER
12 61 00.02	FIXED AUDIENCE SEAT WITH LIGHT UNDER ARMREST
21 00 00.10	VALVE AND EXTINGUISHER CABINET

90% CONSTRUCTION DOCUMENTS

NOT FOR CONSTRUCTION

NORTH ARROW

KEYPLAN

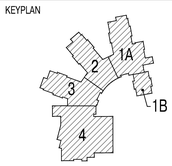

DRAWING NAME:

AUDITORIUM ENLARGED PLAN

DRAWN BY:	MJR / JMR / HM
REVIEWED BY:	BPH
SCALE:	As Noted
JOB NO.:	1403.00
DATE:	July 25, 2016
DRAWING NUMBER:	A10.41

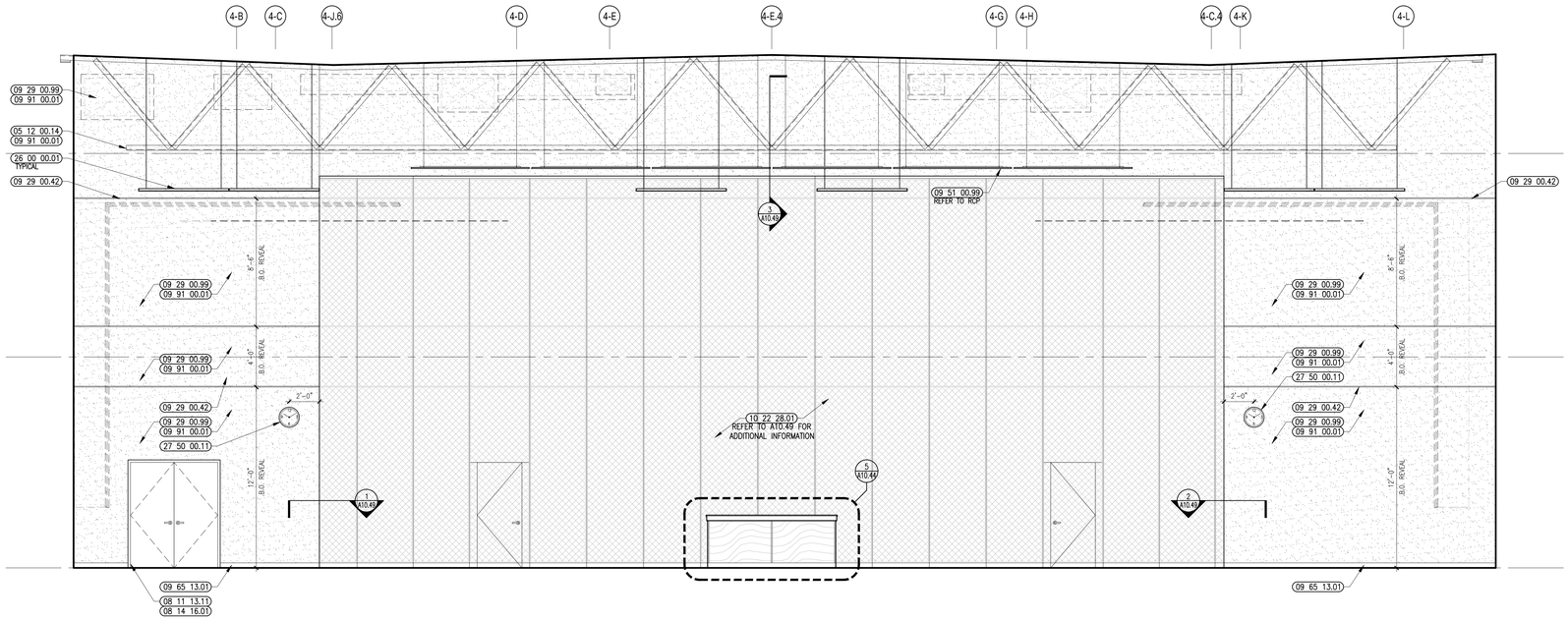

2 STAGE INTERIOR ELEVATION
1/4" = 1'-0"

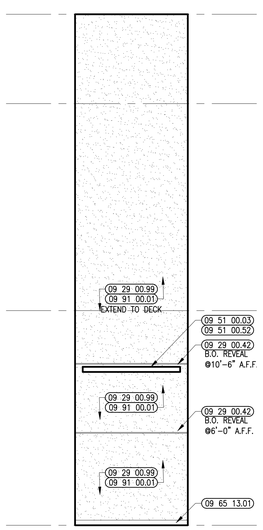

4 AUDITORIUM VESTIBULE INT. ELEVATION
1/4" = 1'-0"

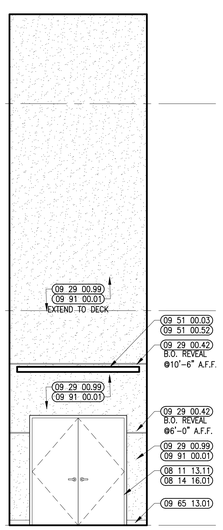

3 AUDITORIUM VESTIBULE INT. ELEVATION
1/4" = 1'-0"

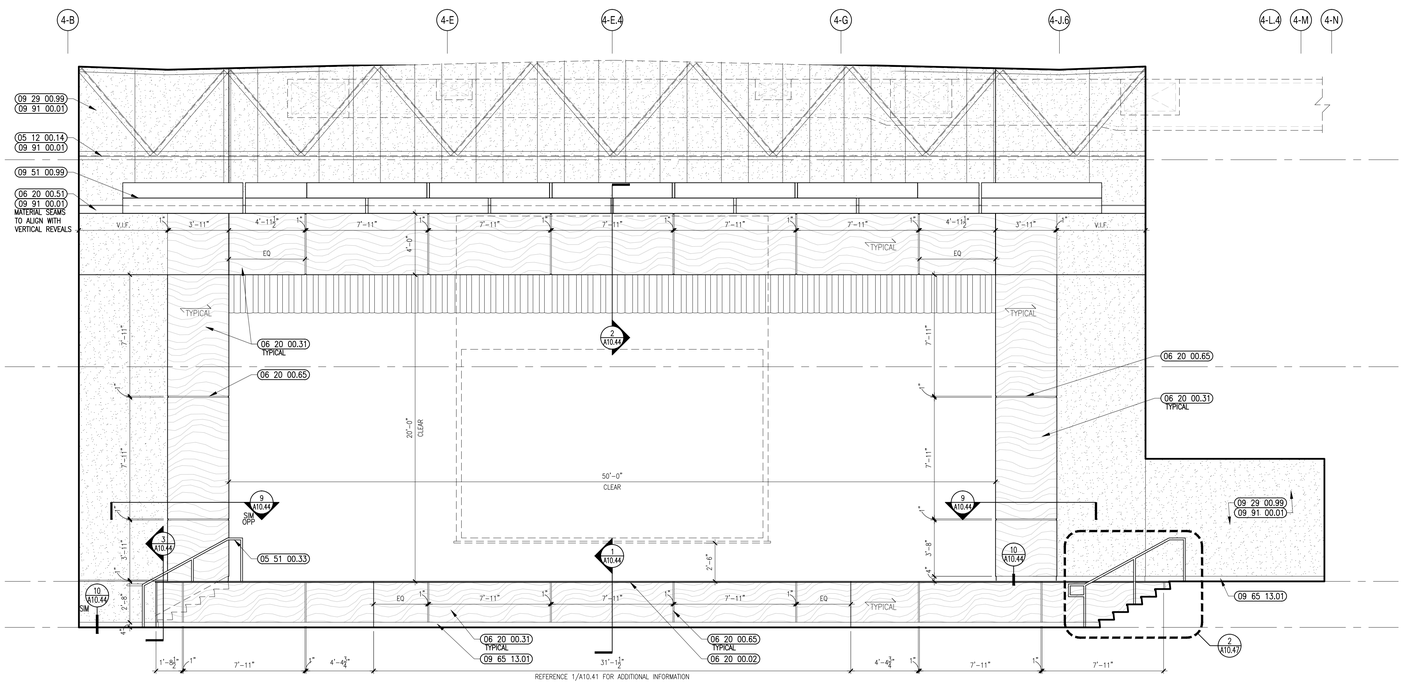

1 AUDITORIUM INTERIOR ELEVATION
1/4" = 1'-0"

526 Boston Post Rd Wayland, MA
508.358.0790 www.ai3architects.com

BEVERLY MIDDLE SCHOOL

CABOT STREET
BEVERLY, MA 01915

Copyright © 2016 Ai3 Architects, LLC

KEYNOTE LEGEND: (REFERENCE SHEETS A0.01 & A0.02 FOR MASTER KEYNOTE LIST AND KEYNOTES NOT LISTED)

05 12 00.01	STEEL BEAM – SEE STRUCTURAL
05 12 00.14	STEEL TRUSS – SEE STRUCTURAL
05 51 00.33	STAINLESS STEEL PIPE HANDRAIL – 1-1/2 INCH O.D.
06 20 00.02	HARDWOOD TRIM – TRANSPARENT FINISH
06 20 00.31	HARDWOOD VENEER PLYWOOD – 1/2 INCH – TRANSPARENT FINISH
06 20 00.51	MDF PLYWOOD – 1/2 INCH
06 20 00.65	BRUSHED STAINLESS FINISH ALUMINUM CHANNEL – 1 INCH
07 81 00.01	CEMENTITIOUS FIREPROOFING
08 11 13.11	STEEL FRAME – SEE SCHEDULE FOR TYPES
08 14 16.01	SOLID CORE FLUSH WOOD DOOR– SEE DOOR SCHEDULE
09 29 00.42	REVEAL – PAINTABLE 3/4 INCH
09 29 00.99	GYPSUM BOARD SYSTEM – LEVEL 4 FINISH – REFER TO FLOOR PLANS AND WALL TYPES FOR COMPONENTS
09 51 00.03	ACT TYPE-3
09 51 00.52	PERIMETER EDGE TRIM SYSTEM
09 51 00.99	ACOUSTICAL CEILING – REFERENCE REFLECTED CEILING PLANS FOR TYPE AND HEIGHT
09 65 13.01	RUBBER BASE – 4"
09 91 00.01	PAINT – SEE SCHEDULE
10 22 28.01	FOLDING PANEL PARTITION
12 61 00.01	FIXED AUDIENCE SEAT
26 00 00.01	LIGHT FIXTURE – SEE ELECTRICAL
27 50 00.11	CLOCK – SEE TECHNOLOGY

90% CONSTRUCTION DOCUMENTS

NOT FOR CONSTRUCTION

NORTH ARROW

KEYPLAN

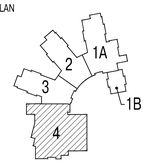

DRAWING NAME:

AUDITORIUM INTERIOR ELEVATIONS

DRAWN BY:	HM / JMR
REVIEWED BY:	BPH
SCALE:	As Noted
JOB NO.:	1403.00
DATE:	July 25, 2016
DRAWING NUMBER:	A10.42

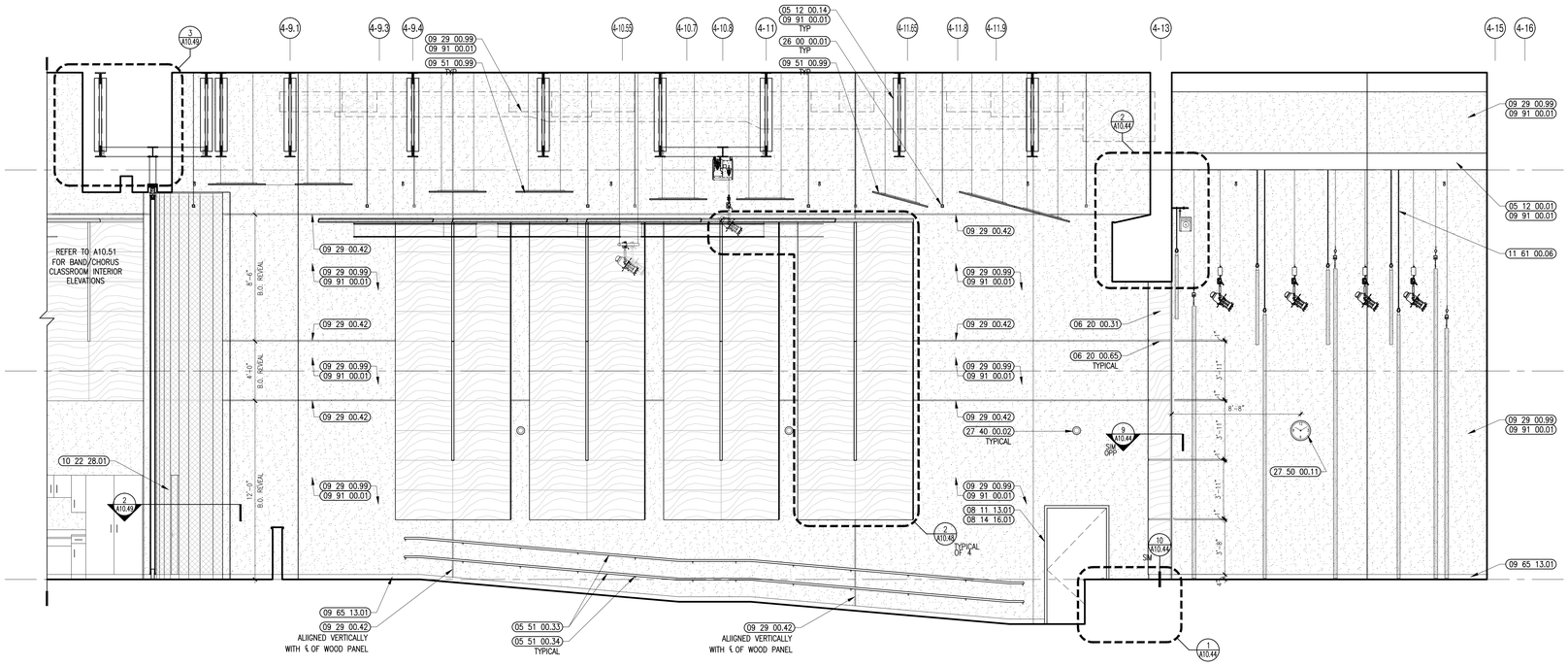

2 AUDITORIUM INTERIOR ELEVATION
1/4" = 1'-0"

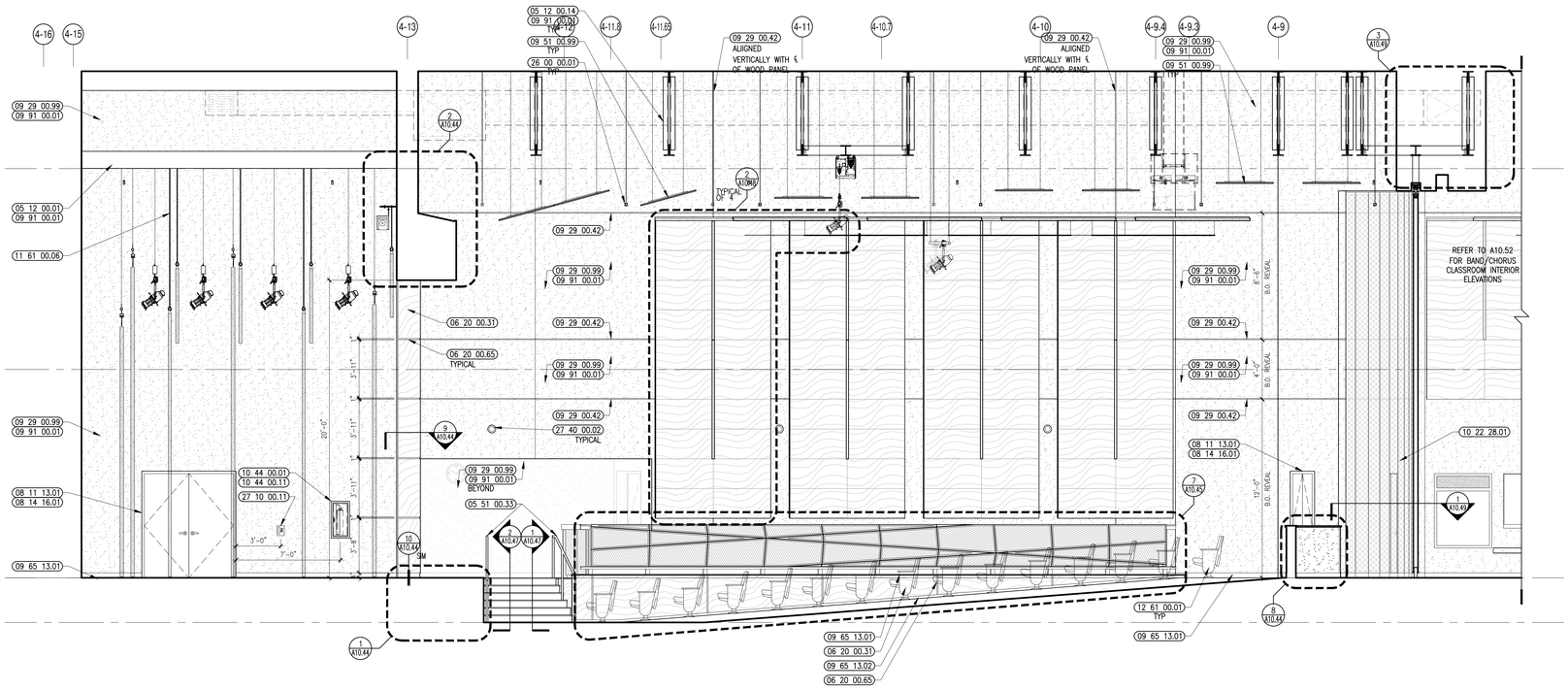

1 AUDITORIUM INTERIOR ELEVATION
1/4" = 1'-0"

A13 architects
526 Boston Post Rd Wayland, MA
508.358.0790 www.a13architects.com

BEVERLY MIDDLE SCHOOL

CABOT STREET
BEVERLY, MA 01915

Copyright © 2016 A13 Architects, LLC

KEYNOTE LEGEND: (REFERENCE SHEETS A0.01 & A0.02 FOR MASTER KEYNOTE LIST AND KEYNOTES NOT LISTED)

05 12 00.01	STEEL BEAM – SEE STRUCTURAL
05 12 00.14	STEEL TRUSS – SEE STRUCTURAL
05 51 00.33	STAINLESS STEEL PIPE HANDRAIL – 1-1/2 INCH O.D.
05 51 00.34	STAINLESS STEEL HANDRAIL BRACKET
06 20 00.31	HARDWOOD VENEER PLYWOOD – 1/2 INCH – TRANSPARENT FINISH
06 20 00.65	BRUSHED STAINLESS FINISH ALUMINUM CHANNEL – 1 INCH
07 81 00.01	CEMENTITIOUS FIREPROOFING
08 11 13.01	DOOR AND FRAME– SEE DOOR SCHEDULE
08 14 16.01	SOLID CORE FLUSH WOOD DOOR– SEE DOOR SCHEDULE
09 29 00.42	REVEAL – PAINTABLE 3/4 INCH
09 29 00.99	GYPSUM BOARD SYSTEM – LEVEL 4 FINISH – REFER TO FLOOR PLANS AND WALL TYPES FOR COMPONENTS
09 51 00.99	ACOUSTICAL CEILING – REFERENCE REFLECTED CEILING PLANS FOR TYPE AND HEIGHT
09 65 13.01	RUBBER BASE – 4"
09 65 13.02	RUBBER BASE – 2"
09 91 00.01	PAINT – SEE SCHEDULE
10 22 28.01	FOLDING PANEL PARTITION
10 44 00.01	FIRE EXTINGUISHER CABINET – FULLY RECESSED
10 44 00.11	FIRE EXTINGUISHER
11 61 00.06	STAGE RIGGING
12 61 00.01	FIXED AUDIENCE SEAT
12 66 13.03	PORTABLE TELESCOPING MANUAL WOOD BLEACHERS
26 00 00.01	LIGHT FIXTURE – SEE ELECTRICAL
27 10 00.11	TELEPHONE JACK – SEE TECHNOLOGY – TELEPHONE DEVICE TO BE OWNER FURNISHED AND INSTALLED
27 40 00.02	CAMERA – SEE TECHNOLOGY
27 50 00.11	CLOCK – SEE TECHNOLOGY

90% CONSTRUCTION DOCUMENTS

NOT FOR CONSTRUCTION

NORTH ARROW

KEYPLAN

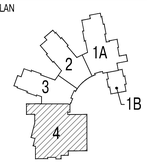

DRAWING NAME:

AUDITORIUM INTERIOR ELEVATIONS

DRAWN BY:	HM / JMR
REVIEWED BY:	BPH
SCALE:	As Noted
JOB NO.:	1403.00
DATE:	July 25, 2016
DRAWING NUMBER:	A10.43

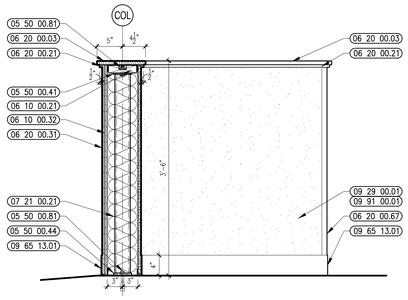

8 CENTER CONSOLE SECTION DETAIL
1" = 1'-0"

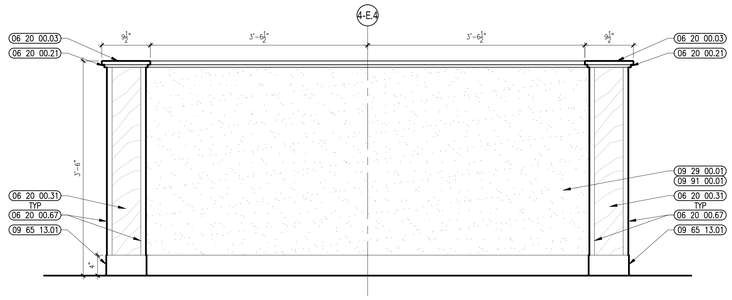

6 CENTER CONSOLE ELEVATION
1" = 1'-0"

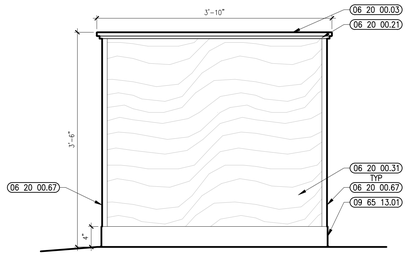

7 CENTER CONSOLE ELEVATION
1" = 1'-0"

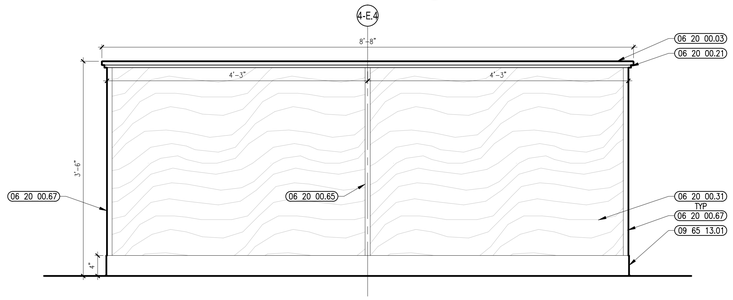

5 CENTER CONSOLE ELEVATION
1" = 1'-0"

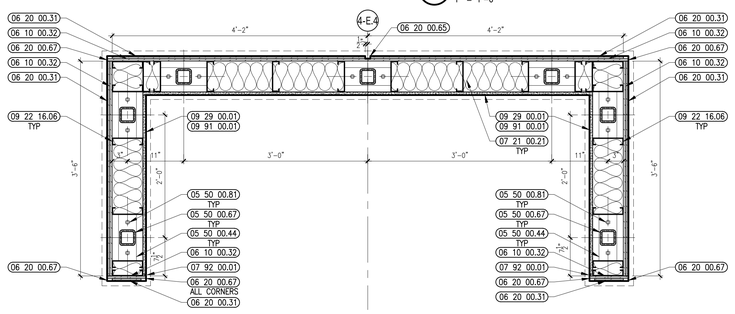

4 CENTER CONSOLE PLAN DETAIL
1" = 1'-0"

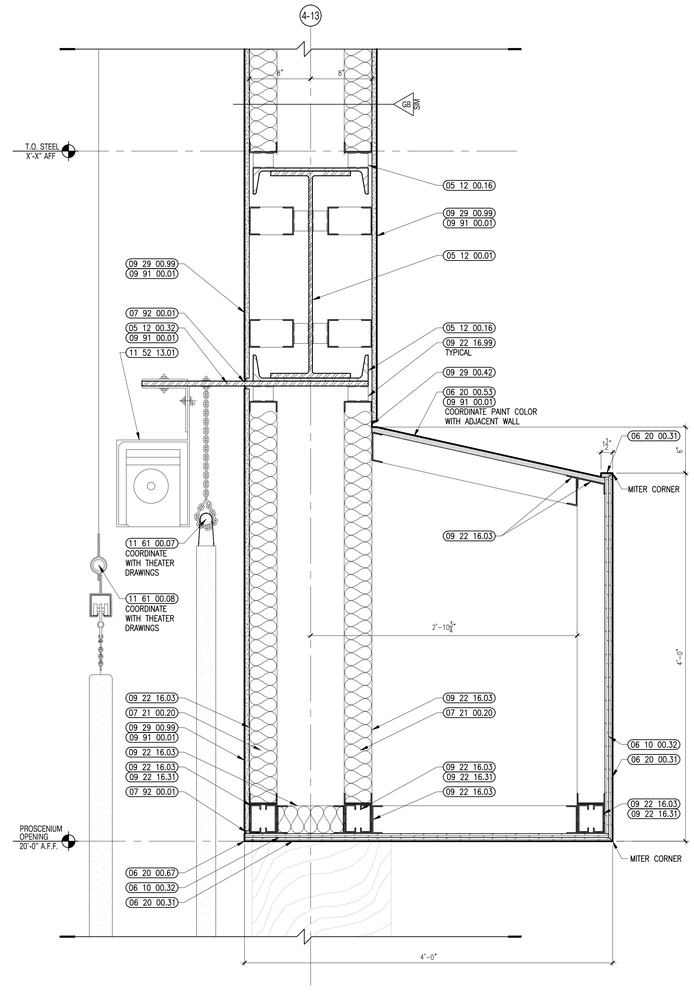

2 PROSCENIUM SOFFIT DETAIL
1-1/2" = 1'-0"

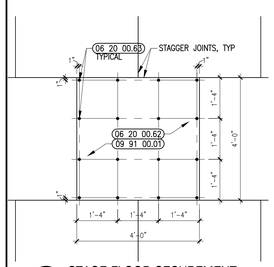

12 STAGE FLOOR SECUREMENT
1/2" = 1'-0"

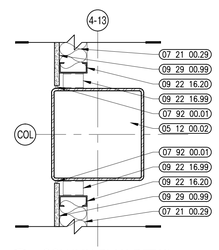

11 COLUMN PLAN DETAIL
1-1/2" = 1'-0"

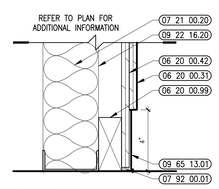

10 PROSCENIUM BASE DETAIL
3" = 1'-0"

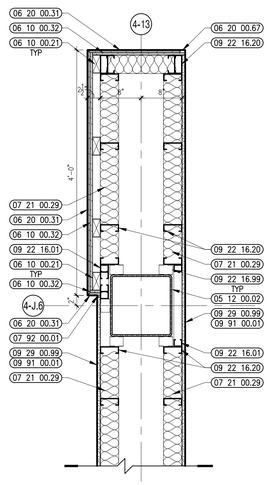

9 PROSCENIUM PLAN DETAIL
1" = 1'-0"

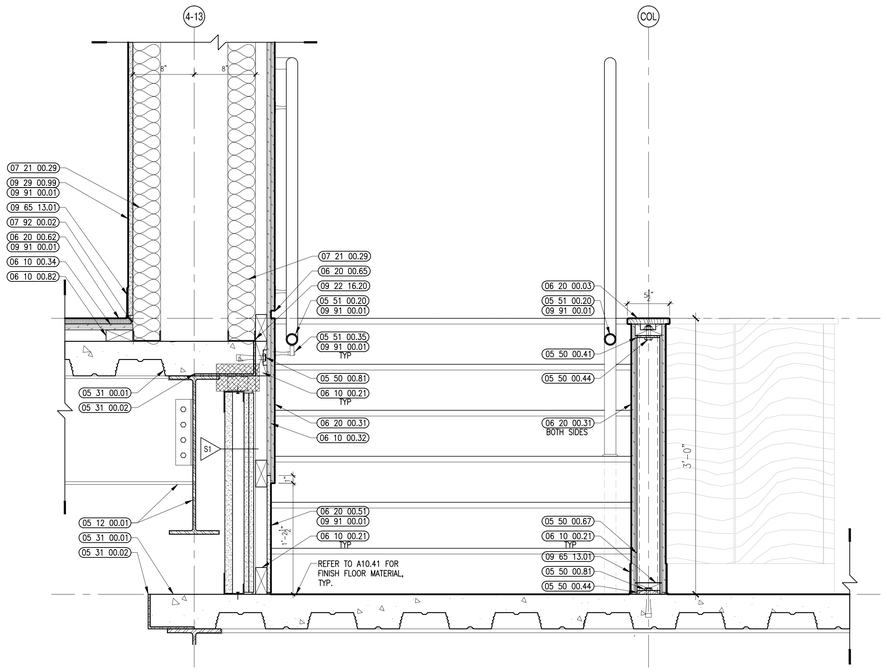

3 STAGE FRONT SECTION DETAIL
1-1/2" = 1'-0"

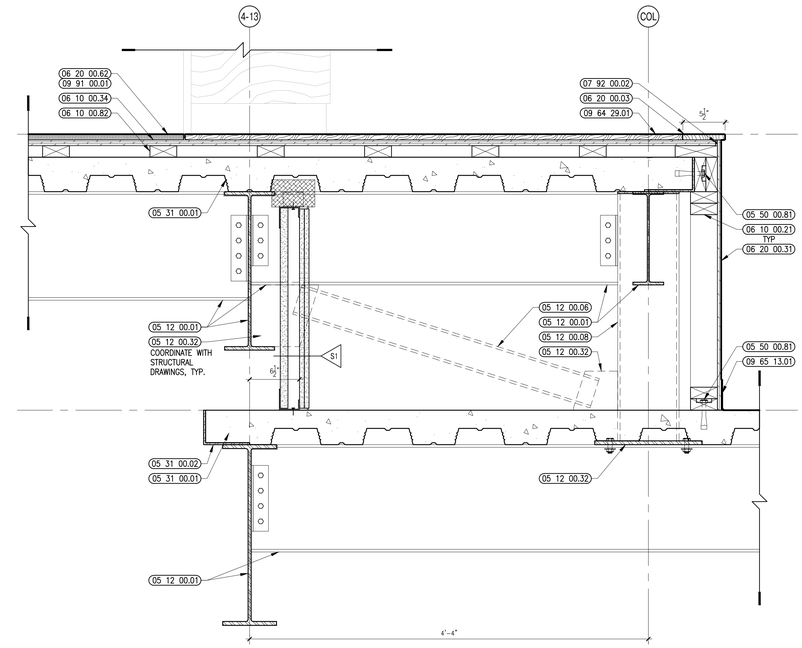

1 STAGE FRONT SECTION DETAIL
1-1/2" = 1'-0"

architects
526 Boston Post Rd Wayland, MA
508.358.0790 www.ai3architects.com

BEVERLY MIDDLE SCHOOL

CABOT STREET
BEVERLY, MA 01915

Copyright © 2016 - AI3 Architects, LLC

KEYNOTE LEGEND: (REFERENCE SHEETS A0.01 & A0.02 FOR MASTER KEYNOTE LIST AND KEYNOTES NOT LISTED)

05 12 00.01	STEEL BEAM – SEE STRUCTURAL
05 12 00.02	STEEL COLUMN – SEE STRUCTURAL
05 12 00.06	STEEL TUBE – SEE STRUCTURAL
05 12 00.08	STEEL TUBE COLUMN – SEE STRUCTURAL
05 12 00.16	STEEL CHANNEL – SEE STRUCTURAL
05 12 00.32	STEEL PLATE – SEE STRUCTURAL
05 31 00.01	COMPOSITE STEEL DECK – SEE STRUCTURAL
05 31 00.02	POUR STOP – FLOOR SLAB – SEE STRUCTURAL
05 50 00.41	STEEL PLATE – 1/4 INCH THICK
05 50 00.44	STEEL PLATE – 1/2 INCH THICK
05 50 00.67	STEEL TUBE POST 3 INCHES x 3 INCHES – PAINTED FINISH
05 50 00.81	ANCHOR BOLT
05 51 00.20	STEEL PIPE GUARDRAIL – 1-1/2 INCH O.D.
05 51 00.35	STAINLESS STEEL HANDRAIL POST BRACKET
06 10 00.21	WOOD BLOCKING – 2X FIRE RETARDANT TREATED – SIZE AS NOTED OR DRAWN
06 10 00.32	PLYWOOD – 1/2 INCH
06 10 00.34	PLYWOOD – 3/4 INCH
06 10 00.82	2X4 PRESSURE TREATED SLEEPERS – 16 INCHES O.C.
06 20 00.03	HARDWOOD TRIM – 3/4 INCH – PENCILED EDGE 1/8 INCH RADIUS – TRANSPARENT FINISH
06 20 00.21	HARDWOOD TRIM – 1/2 INCH – TRANSPARENT FINISH
06 20 00.31	HARDWOOD VENEER PLYWOOD – 1/2 INCH – TRANSPARENT FINISH
06 20 00.42	PLYWOOD – 1/2 INCH
06 20 00.51	MDF PLYWOOD – 1/2 INCH
06 20 00.53	MDF PLYWOOD – 3/4 INCH
06 20 00.62	HARDBOARD STAGE FLOORING
06 20 00.63	FLATHEAD STAINLESS STEEL WOOD SCREW ? COUNTERSUNK
06 20 00.65	BRUSHED STAINLESS FINISH ALUMINUM CHANNEL – 1 INCH
06 20 00.67	BRUSHED STAINLESS FINISH ALUMINUM OUTSIDE CORNER TRIM – 3/8 UNCH EXPOSED FACE.
06 20 00.99	WOOD BLOCKING – SIZE AS REQUIRED
07 21 00.20	GLASS FIBER INSULATION
07 21 00.21	GLASS FIBER ACOUSTICAL BLANKET INSULATION – 6 INCH – UNFACED
07 21 00.29	GLASS FIBER ACOUSTICAL BLANKET INSULATION – MATCH DEPTH OF STUD – UNFACED
07 92 00.01	JOINT SEALANT – TYPE AS REQUIRED
07 92 00.02	BACKER ROD AND SEALANT – TYPE AS REQUIRED
09 22 16.01	METAL STUD 1-5/8 INCH – 16 INCHES O.C. MAX
09 22 16.03	METAL STUD 3-5/8 INCH – 16 INCHES O.C. MAX
09 22 16.06	METAL STUD 6 INCH – 16 INCHES O.C. MAX
09 22 16.20	METAL STUD – REFER TO FLOOR PLANS FOR DEPTH
09 22 16.31	BOXED HEADER
09 22 16.99	METAL CLIP FOR WALL FRAMING – 16 GA. – 24 INCHES O.C. MAX
09 29 00.01	5/8 INCH GYPSUM BOARD – LEVEL 4 FINISH
09 29 00.42	REVEAL – PAINTABLE 3/4 INCH
09 29 00.99	GYPSUM BOARD SYSTEM – LEVEL 4 FINISH – REFER TO FLOOR PLANS AND WALL TYPES FOR COMPONENTS
09 64 29.01	WOOD STRIP AND PLANK FLOOR
09 65 13.01	RUBBER BASE – 4"
09 91 00.01	PAINT – SEE SCHEDULE
11 52 13.01	PROJECTION SCREEN – TYPE 1 – AUDITORIUM
11 61 00.07	CURTAIN – MAIN VALANCE
11 61 00.08	CURTAIN – MAIN TRAVELER

90% CONSTRUCTION DOCUMENTS

NOT FOR CONSTRUCTION

NORTH ARROW

KEYPLAN

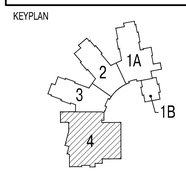

DRAWING NAME:

AUDITORIUM DETAILS

DRAWN BY:	JMR / HM
REVIEWED BY:	BPH
SCALE:	As Noted
JOB NO.:	1403.00
DATE:	July 25, 2016
DRAWING NUMBER:	A10.44

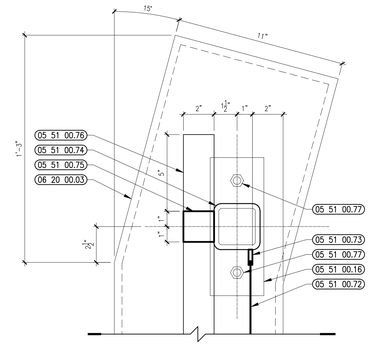

10 AUDITORIUM RAILING PLAN DETAIL
1" = 1'-0"

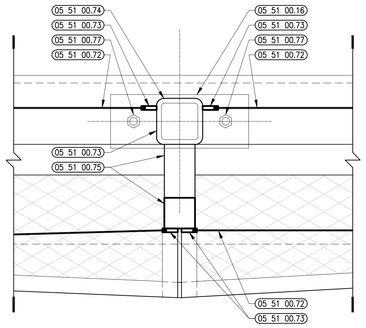

9 AUDITORIUM RAILING PLAN DETAIL
3" = 1'-0"

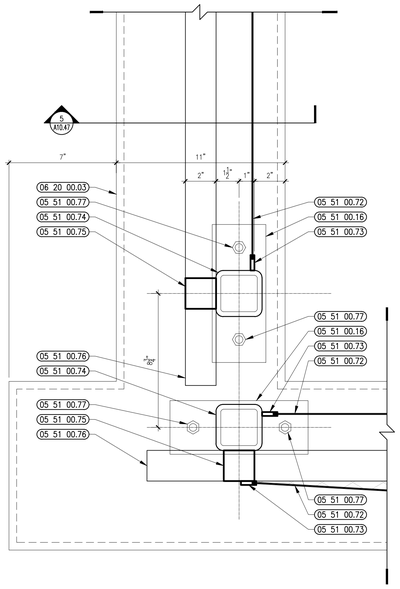

6 AUDITORIUM RAILING PLAN DETAIL
3" = 1'-0"

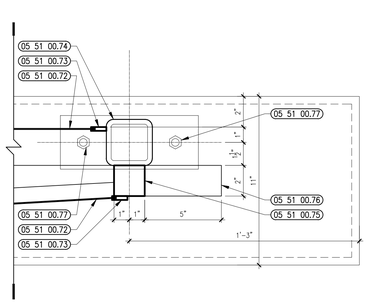

5 AUDITORIUM RAILING PLAN DETAIL
3" = 1'-0"

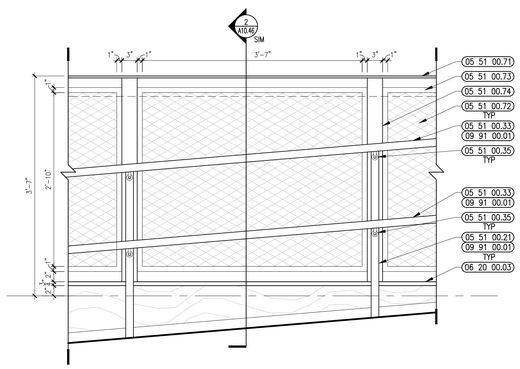

2 AUDITORIUM RAILING ELEVATION DETAIL
1" = 1'-0"

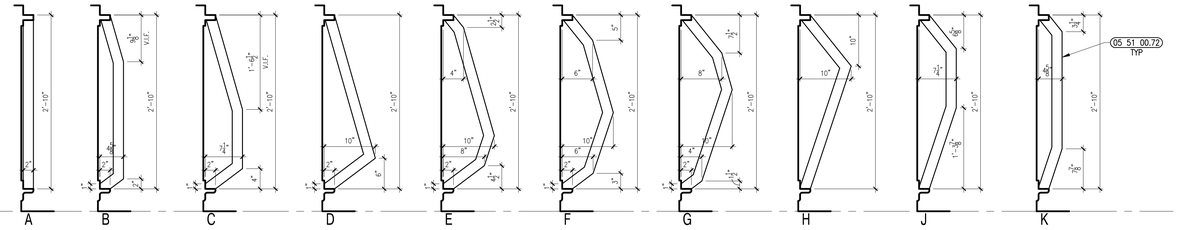

11 AUDITORIUM RAILING POST ELEVATIONS
1" = 1'-0"

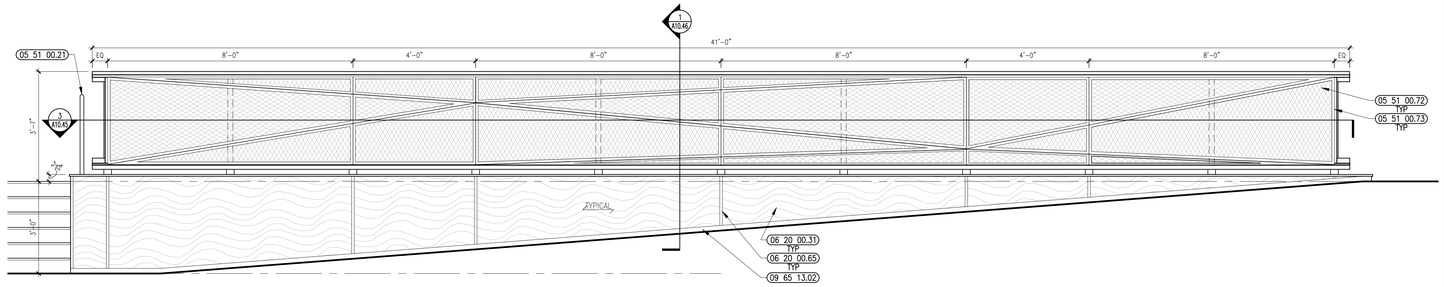

8 AUDITORIUM RAILING ELEVATION @ WALK
1/2" = 1'-0"

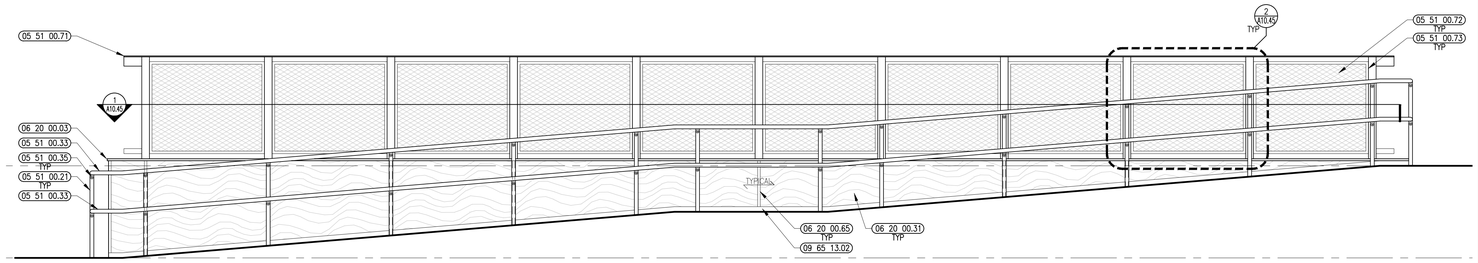

7 AUDITORIUM RAILING ELEVATION @ RAMP
1/2" = 1'-0"

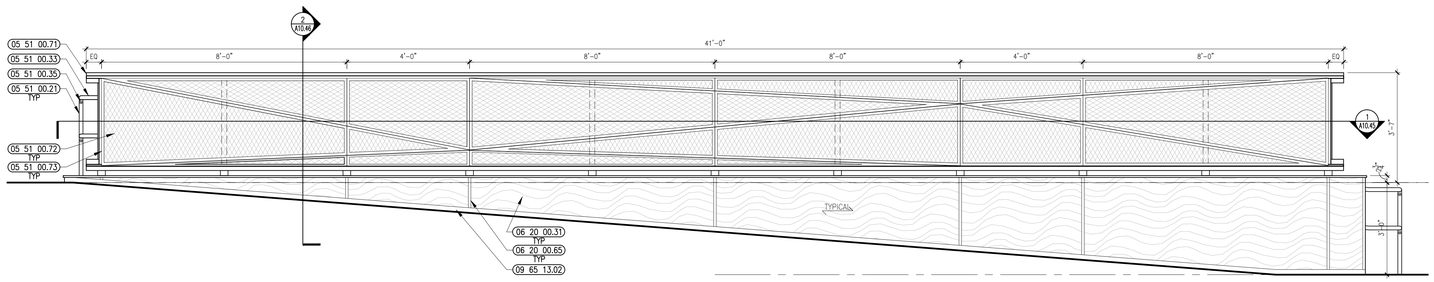

4 AUDITORIUM RAILING ELEVATION @ RAMP
1/2" = 1'-0"

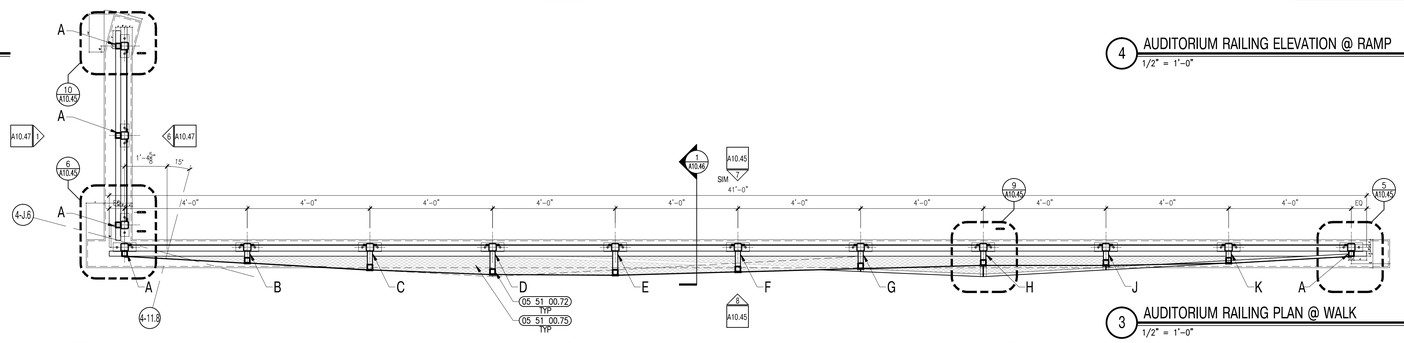

3 AUDITORIUM RAILING PLAN @ WALK
1/2" = 1'-0"

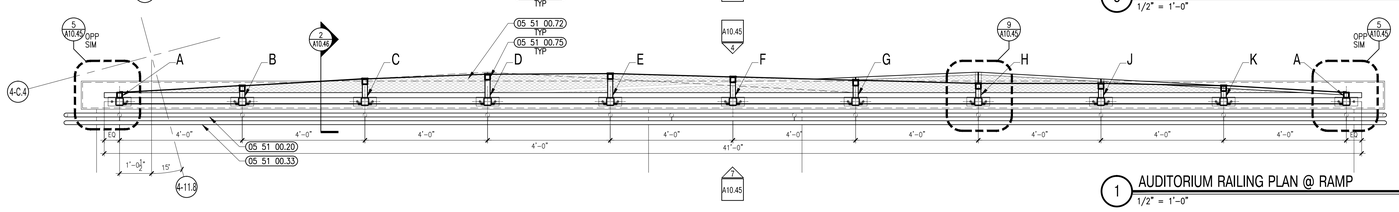

1 AUDITORIUM RAILING PLAN @ RAMP
1/2" = 1'-0"

Ai3 architects
526 Boston Post Rd Wayland, MA
508.358.0790 www.ai3architects.com

BEVERLY MIDDLE SCHOOL

CABOT STREET
BEVERLY, MA 01915

Copyright © 2016 Ai3 Architects, LLC

KEYNOTE LEGEND: (REFERENCE SHEETS A0.01 & A0.02 FOR MASTER KEYNOTE LIST AND KEYNOTES NOT LISTED)

03 30 00.03	CONCRETE SLAB ON DECK – SEE STRUCTURAL
05 12 00.01	STEEL BEAM – SEE STRUCTURAL
05 50 00.81	ANCHOR BOLT
05 51 00.15	STEEL ANGLE 2 X 2 X 3/8
05 51 00.16	STEEL PLATE – 1/2 INCH
05 51 00.17	STEEL PLATE – 1/4 INCH
05 51 00.20	STEEL PIPE GUARDRAIL – 1-1/2 INCH O.D.
05 51 00.21	STEEL PIPE GUARDRAIL POST – 1-1/2 INCH O.D.
05 51 00.33	STAINLESS STEEL PIPE HANDRAIL – 1-1/2 INCH O.D.
05 51 00.35	STAINLESS STEEL HANDRAIL POST BRACKET
05 51 00.41	STEEL BAR – 1/2 INCH x 1/2 INCH
05 51 00.44	STEEL BAR – 1 INCH X 2 INCH
05 51 00.60	WELD TO STEEL FRAMING
05 51 00.71	CONTINUOUS BENT PLATE 3-1/2 x 4 x 3/8 LLV – PAINTED FINISH
05 51 00.72	DECORATIVE METAL PANEL – 44% OPEN MESH
05 51 00.73	METAL PANEL U-EDGING TRIM – 1 INCH – STAINLESS FINISH
05 51 00.74	STEEL TUBE POST 3 INCH x 3 INCH – PAINTED FINISH
05 51 00.75	STEEL BAR – 2 INCH x 2 INCH – PAINTED FINISH
05 51 00.76	CONTINUOUS BENT PLATE 2 x 2-3/8 X 3/8 INCH LLH – PAINTED FINISH
05 51 00.77	ANCHOR BOLT
06 10 00.11	WOOD BLOCKING – 2X PRESSURE TREATED – SIZE AS NOTED OR DRAWN
06 20 00.03	HARDWOOD TRIM – 3/4 INCH – PENCILED EDGE 1/8 INCH RADIUS – TRANSPARENT FINISH
06 20 00.31	HARDWOOD VENEER PLYWOOD – 1/2 INCH – TRANSPARENT FINISH
06 20 00.42	PLYWOOD – 1/2 INCH
06 20 00.65	BRUSHED STAINLESS FINISH ALUMINUM CHANNEL – 1 INCH
07 92 00.01	JOINT SEALANT – TYPE AS REQUIRED
09 65 13.02	RUBBER BASE – 2"
09 91 00.01	PAINT – SEE SCHEDULE

90% CONSTRUCTION DOCUMENTS

NOT FOR CONSTRUCTION

NORTH ARROW

KEYPLAN

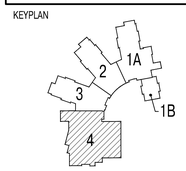

DRAWING NAME:

AUDITORIUM HALF-WALL & RAILING DETAILS

DRAWN BY:	JMR
REVIEWED BY:	BPH
SCALE:	As Noted
JOB NO.:	1403.00
DATE:	July 25, 2016
DRAWING NUMBER:	A10.45

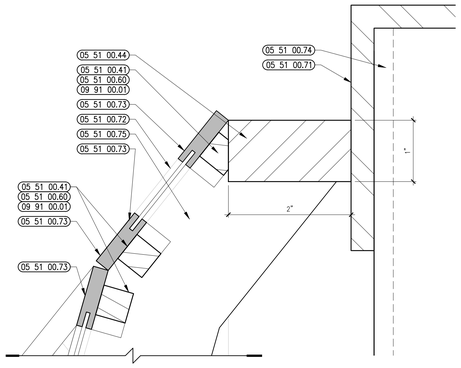

5 AUDITORIUM RAILING CONNECTION DETAIL
1" = 1'-0"

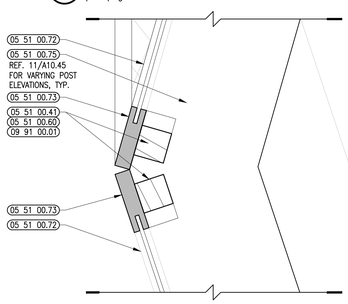

4 AUDITORIUM RAILING CONNECTION DETAIL
1" = 1'-0"

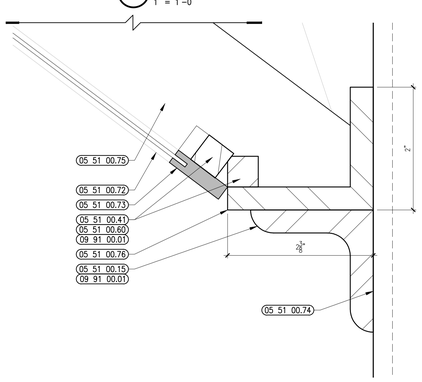

3 AUDITORIUM RAILING CONNECTION DETAIL
1" = 1'-0"

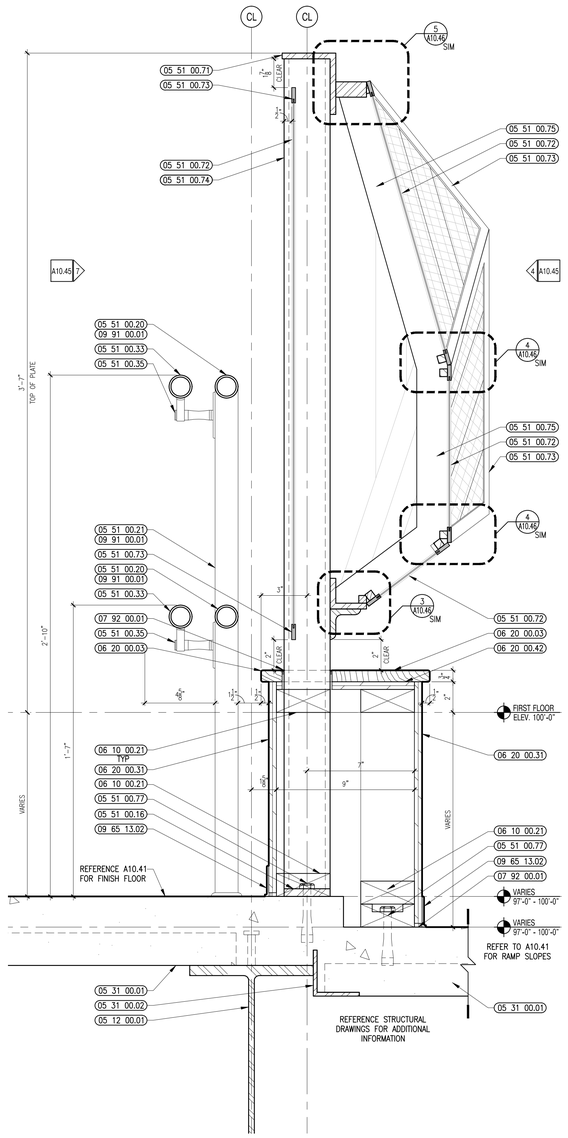

2 AUDITORIUM RAILING SECTION @ RAMP
3" = 1'-0"

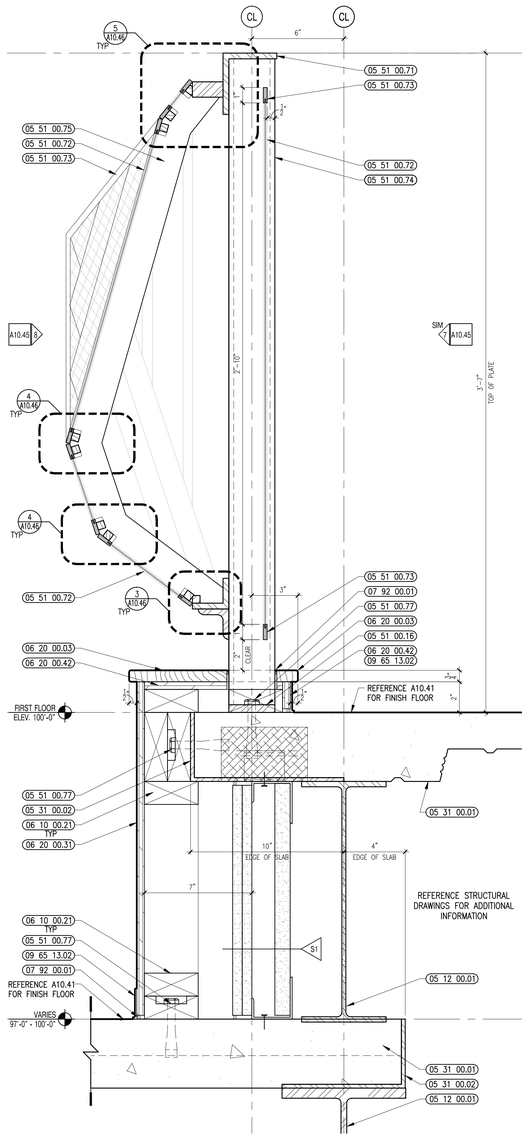

1 AUDITORIUM RAILING SECTION @ WALK
3" = 1'-0"

526 Boston Post Rd Wayland, MA
508.358.0790 www.ai3architects.com

BEVERLY MIDDLE SCHOOL

CABOT STREET
BEVERLY, MA 01915

Copyright © 2016 Ai3 Architects, LLC

KEYNOTE LEGEND: (REFERENCE SHEETS A0.01 & A0.02 FOR MASTER KEYNOTE LIST AND KEYNOTES NOT LISTED)

05 12 00.01	STEEL BEAM – SEE STRUCTURAL
05 31 00.01	COMPOSITE STEEL DECK – SEE STRUCTURAL
05 31 00.02	POUR STOP – FLOOR SLAB – SEE STRUCTURAL
05 51 00.15	STEEL ANGLE 2 X 2 X 3/8
05 51 00.16	STEEL PLATE – 1/2 INCH
05 51 00.20	STEEL PIPE GUARDRAIL – 1-1/2 INCH O.D.
05 51 00.21	STEEL PIPE GUARDRAIL POST – 1-1/2 INCH O.D.
05 51 00.33	STAINLESS STEEL PIPE HANDRAIL – 1-1/2 INCH O.D.
05 51 00.35	STAINLESS STEEL HANDRAIL POST BRACKET
05 51 00.41	STEEL BAR – 1/2 INCH x 1/2 INCH
05 51 00.44	STEEL BAR – 1 INCH X 2 INCH
05 51 00.60	WELD TO STEEL FRAMING
05 51 00.71	CONTINUOUS BENT PLATE 3-1/2 x 4 x 3/8 LLV – PAINTED FINISH
05 51 00.72	DECORATIVE METAL PANEL – 44% OPEN MESH
05 51 00.73	METAL PANEL U-EDGING TRIM – 1 INCH – STAINLESS FINISH
05 51 00.74	STEEL TUBE POST 3 INCH x 3 INCH – PAINTED FINISH
05 51 00.75	STEEL BAR – 2 INCH x 2 INCH – PAINTED FINISH
05 51 00.76	CONTINUOUS BENT PLATE 2 x 2-3/8 X 3/8 INCH LLH – PAINTED FINISH
05 51 00.77	ANCHOR BOLT
06 10 00.21	WOOD BLOCKING – 2X FIRE RETARDANT TREATED – SIZE AS NOTED OR DRAWN
06 20 00.03	HARDWOOD TRIM – 3/4 INCH – PENCILED EDGE 1/8 INCH RADIUS – TRANSPARENT FINISH
06 20 00.31	HARDWOOD VENEER PLYWOOD – 1/2 INCH – TRANSPARENT FINISH
06 20 00.42	PLYWOOD – 1/2 INCH
07 92 00.01	JOINT SEALANT – TYPE AS REQUIRED
09 65 13.02	RUBBER BASE – 2"
09 91 00.01	PAINT – SEE SCHEDULE

90% CONSTRUCTION DOCUMENTS

NOT FOR CONSTRUCTION

NORTH ARROW

KEYPLAN

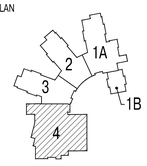

DRAWING NAME:

AUDITORIUM HALF-WALL & RAILING DETAILS

DRAWN BY:	JMR / HM
REVIEWED BY:	BPH
SCALE:	As Noted
JOB NO.:	1403.00
DATE:	July 25, 2016
DRAWING NUMBER:	A10.46

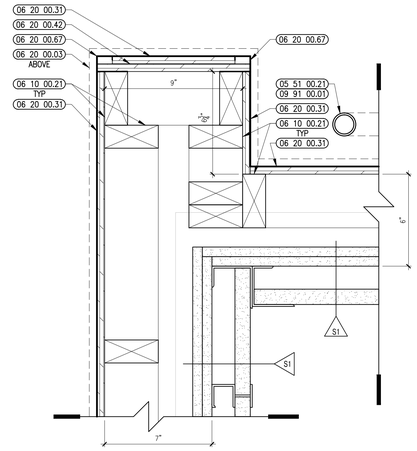

8 LOW WALL PLAN DETAIL
3" = 1'-0"

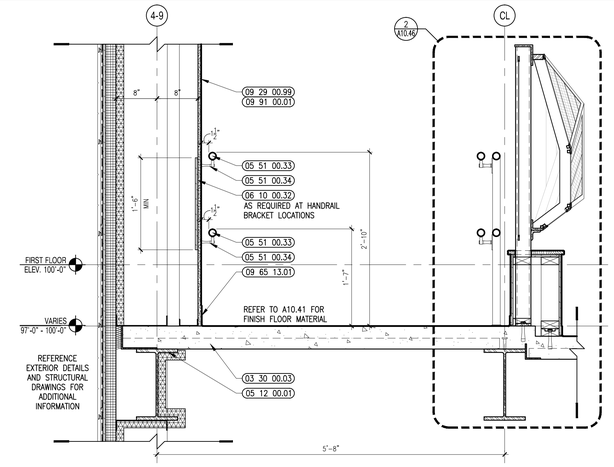

7 RAMP SECTION DETAIL
1" = 1'-0"

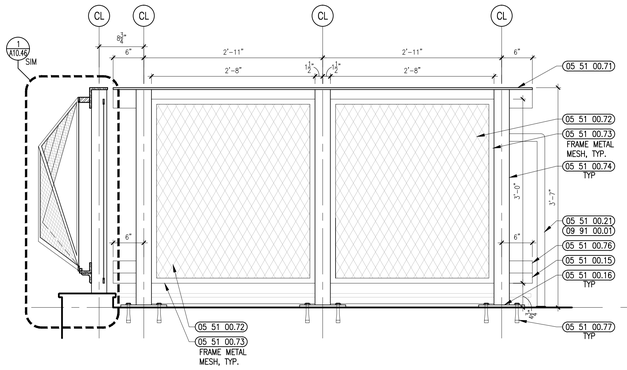

6 GUARDRAIL ELEVATION
1" = 1'-0"

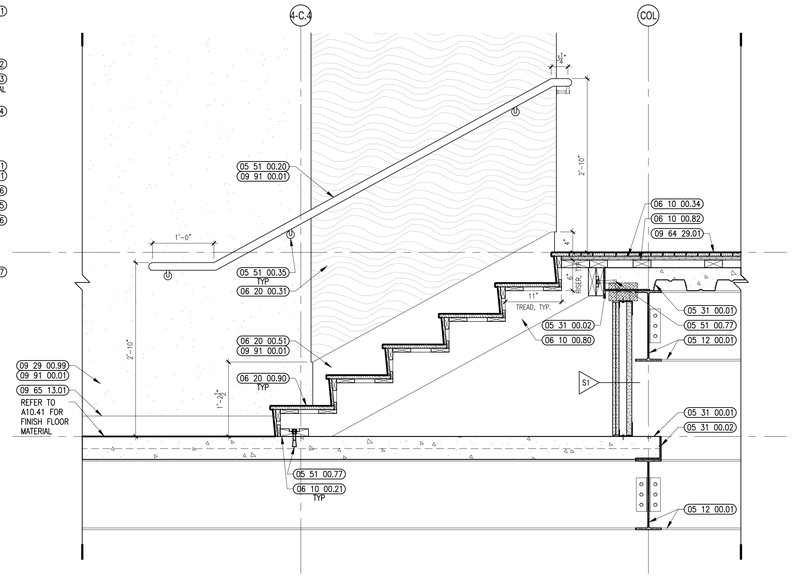

4 STAIR SECTION DETAIL
1" = 1'-0"

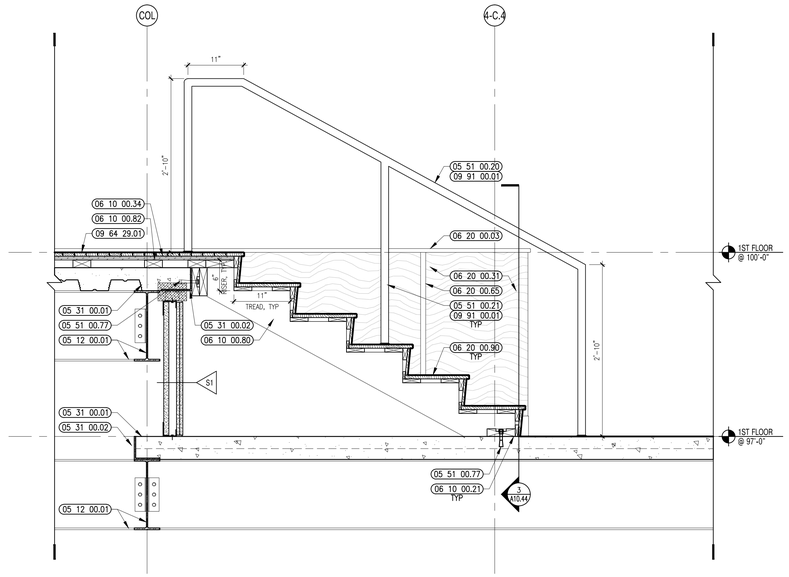

3 STAIR SECTION DETAIL
1" = 1'-0"

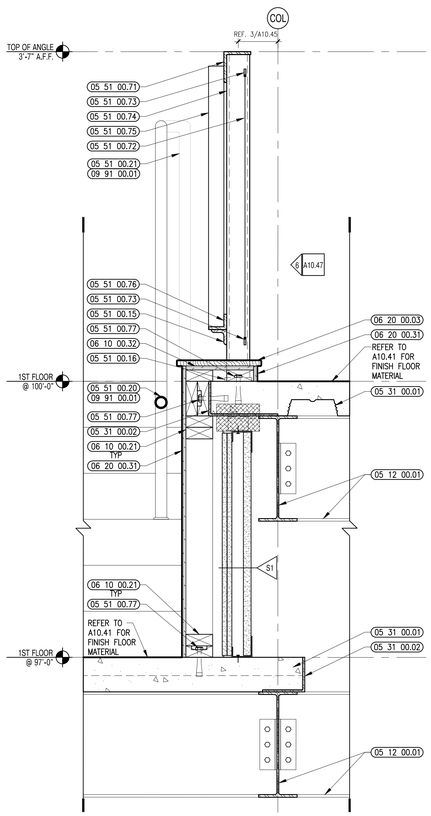

5 GUARDRAIL SECTION
1-1/2" = 1'-0"

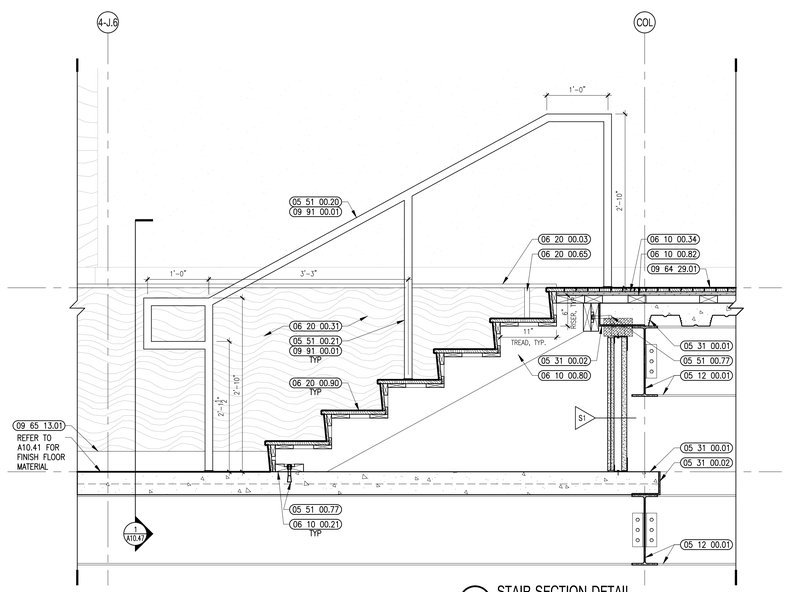

2 STAIR SECTION DETAIL
1" = 1'-0"

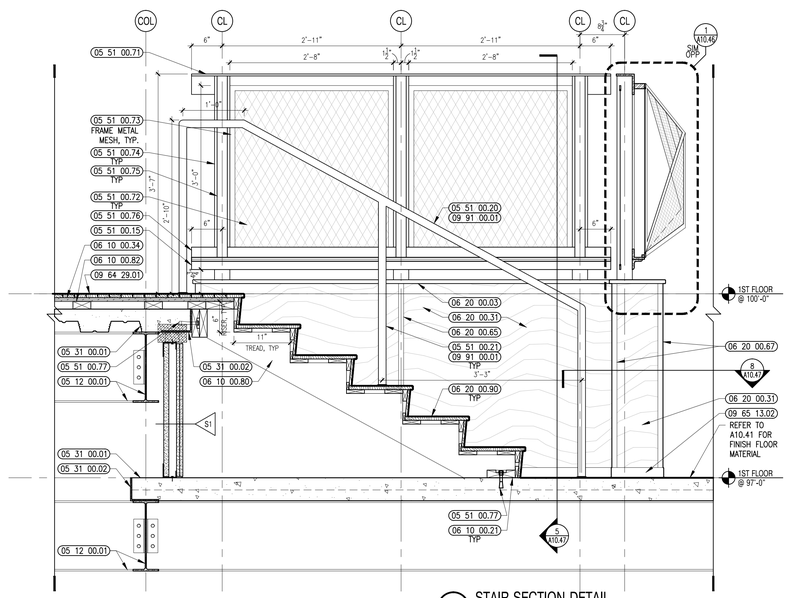

1 STAIR SECTION DETAIL
1" = 1'-0"

526 Boston Post Rd Wayland, MA
508.358.0790 www.ai3architects.com

BEVERLY MIDDLE SCHOOL

CABOT STREET
BEVERLY, MA 01915

Copyright © 2016 - AI3 Architects, LLC

KEYNOTE LEGEND: (REFERENCE SHEETS A0.01 & A0.02 FOR MASTER KEYNOTE LIST AND KEYNOTES NOT LISTED)

03 30 00.03	CONCRETE SLAB ON DECK – SEE STRUCTURAL
05 12 00.01	STEEL BEAM – SEE STRUCTURAL
05 31 00.01	COMPOSITE STEEL DECK – SEE STRUCTURAL
05 31 00.02	POUR STOP – FLOOR SLAB – SEE STRUCTURAL
05 51 00.15	STEEL ANGLE 2 X 2 X 3/8
05 51 00.16	STEEL PLATE – 1/2 INCH
05 51 00.20	STEEL PIPE GUARDRAIL – 1-1/2 INCH O.D.
05 51 00.21	STEEL PIPE GUARDRAIL POST – 1-1/2 INCH O.D.
05 51 00.33	STAINLESS STEEL PIPE HANDRAIL – 1-1/2 INCH O.D.
05 51 00.34	STAINLESS STEEL HANDRAIL BRACKET
05 51 00.35	STAINLESS STEEL HANDRAIL POST BRACKET
05 51 00.71	CONTINUOUS BENT PLATE 3-1/2 x 4 x 3/8 LLV – PAINTED FINISH
05 51 00.72	DECORATIVE METAL PANEL – 44% OPEN MESH
05 51 00.73	METAL PANEL U-EDGING TRIM – 1 INCH – STAINLESS FINISH
05 51 00.74	STEEL TUBE POST 3 INCH x 3 INCH – PAINTED FINISH
05 51 00.75	STEEL BAR – 2 INCH x 2 INCH – PAINTED FINISH
05 51 00.76	CONTINUOUS BENT PLATE 2 x 2-3/8 X 3/8 INCH LLH – PAINTED FINISH
05 51 00.77	ANCHOR BOLT
06 10 00.21	WOOD BLOCKING – 2X FIRE RETARDANT TREATED – SIZE AS NOTED OR DRAWN
06 10 00.32	PLYWOOD – 1/2 INCH
06 10 00.34	PLYWOOD – 3/4 INCH
06 10 00.80	2X WOOD STRINGER – FIRE TREATED
06 10 00.82	2X4 PRESSURE TREATED SLEEPERS – 16 INCHES O.C.
06 20 00.03	HARDWOOD TRIM – 3/4 INCH – PENCILED EDGE 1/8 INCH RADIUS – TRANSPARENT FINISH
06 20 00.31	HARDWOOD VENEER PLYWOOD – 1/2 INCH – TRANSPARENT FINISH
06 20 00.42	PLYWOOD – 1/2 INCH
06 20 00.51	MDF PLYWOOD – 1/2 INCH
06 20 00.65	BRUSHED STAINLESS FINISH ALUMINUM CHANNEL – 1 INCH
06 20 00.67	BRUSHED STAINLESS FINISH ALUMINUM OUTSIDE CORNER TRIM – 3/8 UNCH EXPOSED FACE.
06 20 00.90	HARDWOOD TREAD AND RISER TO MATCH STAGE FLOOR – TRANSPARENT FINISH
09 29 00.99	GYPSUM BOARD SYSTEM – LEVEL 4 FINISH – REFER TO FLOOR PLANS AND WALL TYPES FOR COMPONENTS
09 64 29.01	WOOD STRIP AND PLANK FLOOR
09 65 13.01	RUBBER BASE – 4"
09 65 13.02	RUBBER BASE – 2"
09 91 00.01	PAINT – SEE SCHEDULE

90% CONSTRUCTION DOCUMENTS

NOT FOR CONSTRUCTION

NORTH ARROW

KEYPLAN

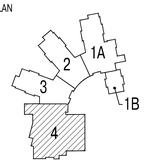

DRAWING NAME:

AUDITORIUM DETAILS

DRAWN BY:	JMR / HM
REVIEWED BY:	BPH
SCALE:	As Noted
JOB NO.:	1403.00
DATE:	July 25, 2016
DRAWING NUMBER:	A10.47

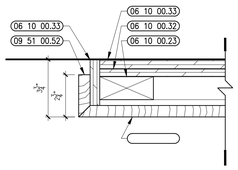

11 WOOD PANEL PLAN DETAIL
3" = 1'-0"

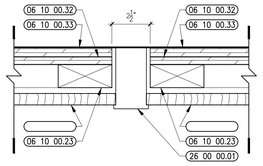

10 WOOD PANEL PLAN DETAIL
3" = 1'-0"

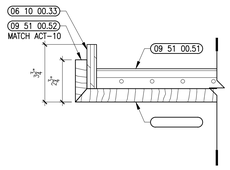

9 WOOD PANEL SECTION DETAIL
3" = 1'-0"

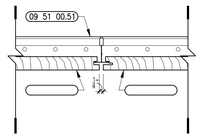

8 WOOD PANEL SECTION DETAIL
3" = 1'-0"

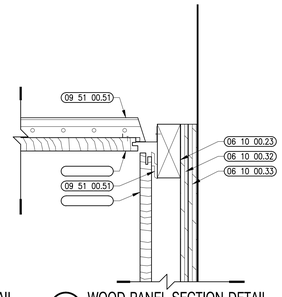

7 WOOD PANEL SECTION DETAIL
3" = 1'-0"

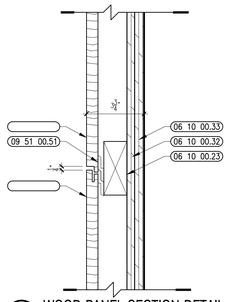

6 WOOD PANEL SECTION DETAIL
3" = 1'-0"

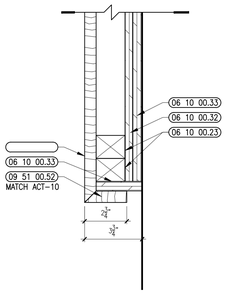

5 WOOD PANEL SECTION DETAIL
3" = 1'-0"

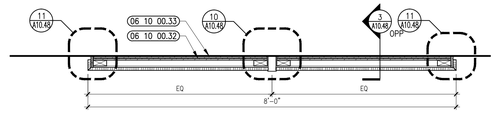

4 AUDITORIUM WOOD PANEL PLAN
3/4" = 1'-0"

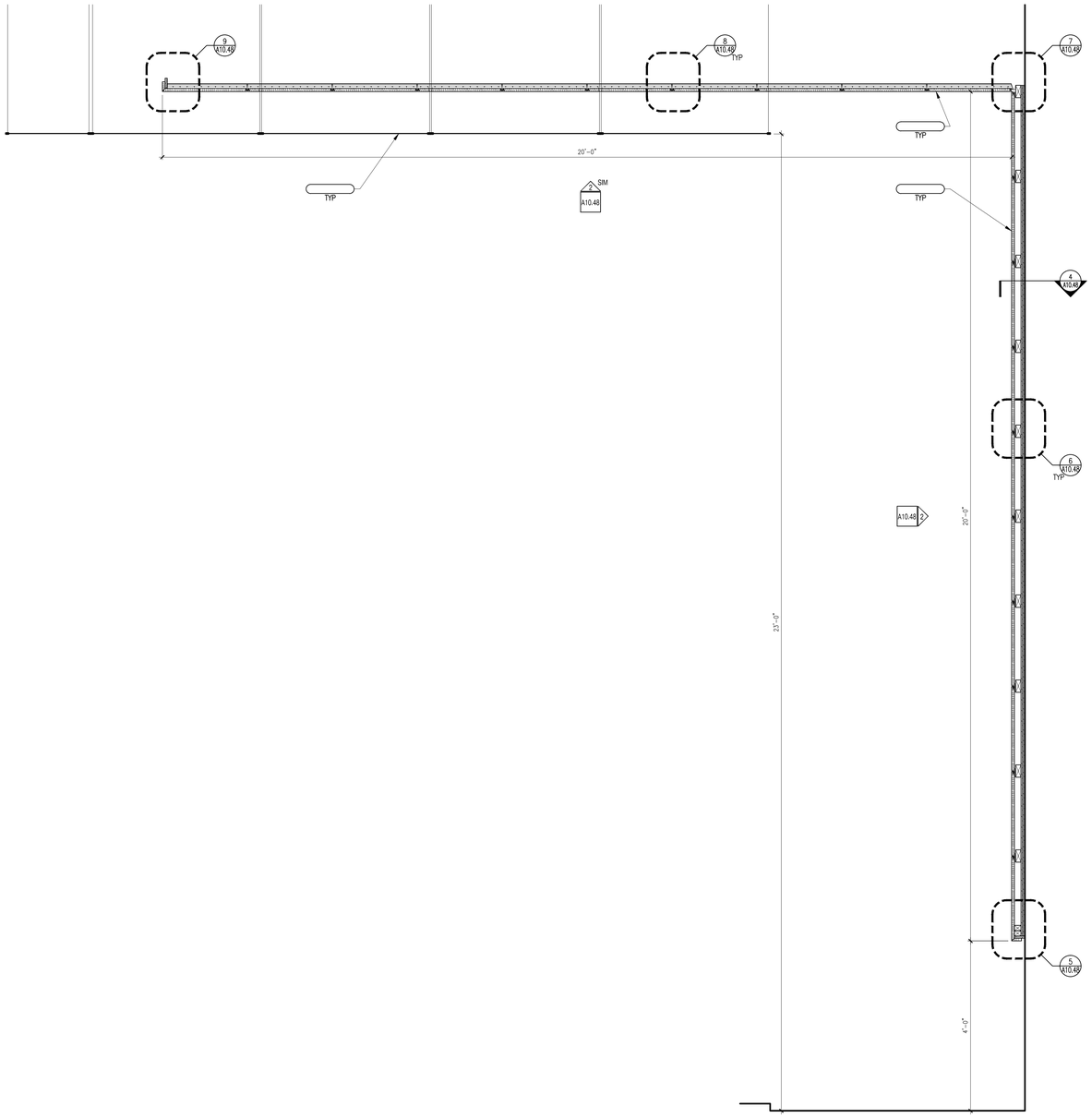

3 AUDITORIUM CUSTOM PANEL SECTION
3/4" = 1'-0"

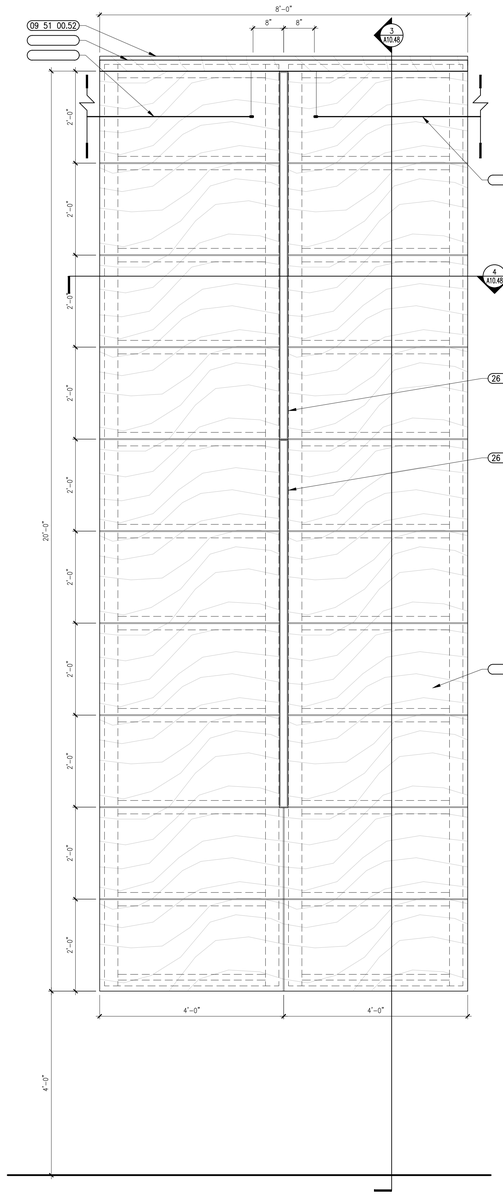

2 AUDITORIUM CUSTOM PANEL ELEVATION
3/4" = 1'-0"

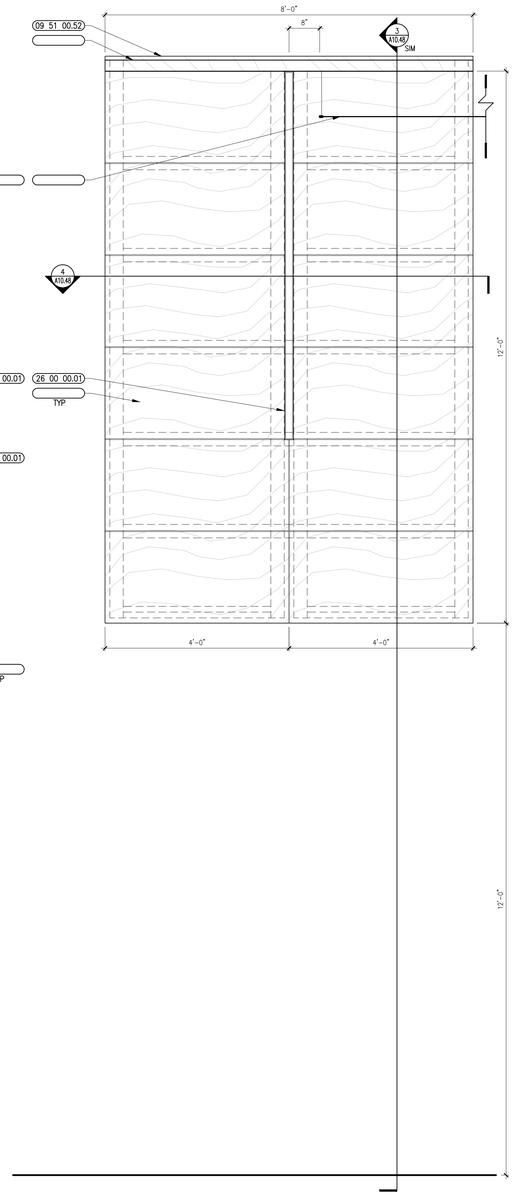

1 AUDITORIUM CUSTOM PANEL ELEVATION
3/4" = 1'-0"

architects
526 Boston Post Rd Wayland, MA
508.358.0790 www.ai3architects.com

BEVERLY MIDDLE SCHOOL

CABOT STREET
BEVERLY, MA 01915

Copyright © 2016 AI3 Architects, LLC

KEYNOTE LEGEND: (REFERENCE SHEETS A0.01 & A0.02 FOR MASTER KEYNOTE LIST AND KEYNOTES NOT LISTED)

06 10 00.23	WOOD BLOCKING – FIRE RETARDANT TREATED – SIZE AS NOTED OR DRAWN
06 10 00.32	PLYWOOD – 1/2 INCH
06 10 00.33	PLYWOOD – 5/8 INCH
09 51 00.52	PERIMETER EDGE TRIM SYSTEM
09 51 00.99	ACOUSTICAL CEILING – REFERENCE REFLECTED CEILING PLANS FOR TYPE AND HEIGHT
26 00 00.01	LIGHT FIXTURE – SEE ELECTRICAL

90% CONSTRUCTION DOCUMENTS

NOT FOR CONSTRUCTION

NORTH ARROW

KEYPLAN

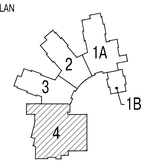

DRAWING NAME:
AUDITORIUM DETAILS

DRAWN BY:	JMR / HM
REVIEWED BY:	BPH
SCALE:	As Noted
JOB NO.:	1403.00
DATE:	July 25, 2016
DRAWING NUMBER:	A10.48

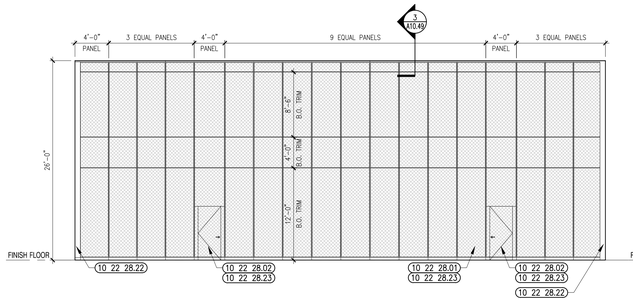

5B OPERABLE WALL PARTITION ELEVATION: AUDITORIUM SIDE
1/8" = 1'-0"

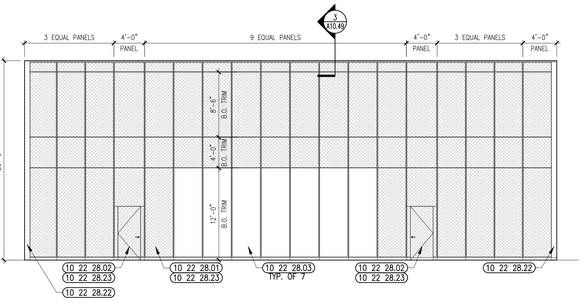

5A OPERABLE WALL PARTITION ELEVATION: BAND/CHORAL SIDE
1/8" = 1'-0"

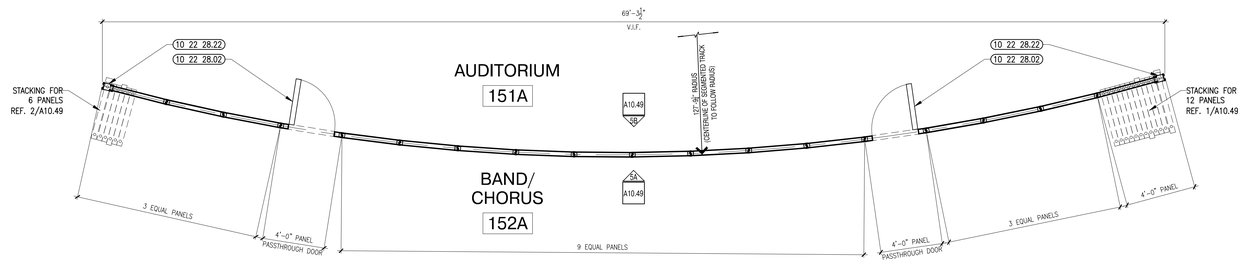

4 OPERABLE WALL PARTITION PLAN
1/4" = 1'-0"

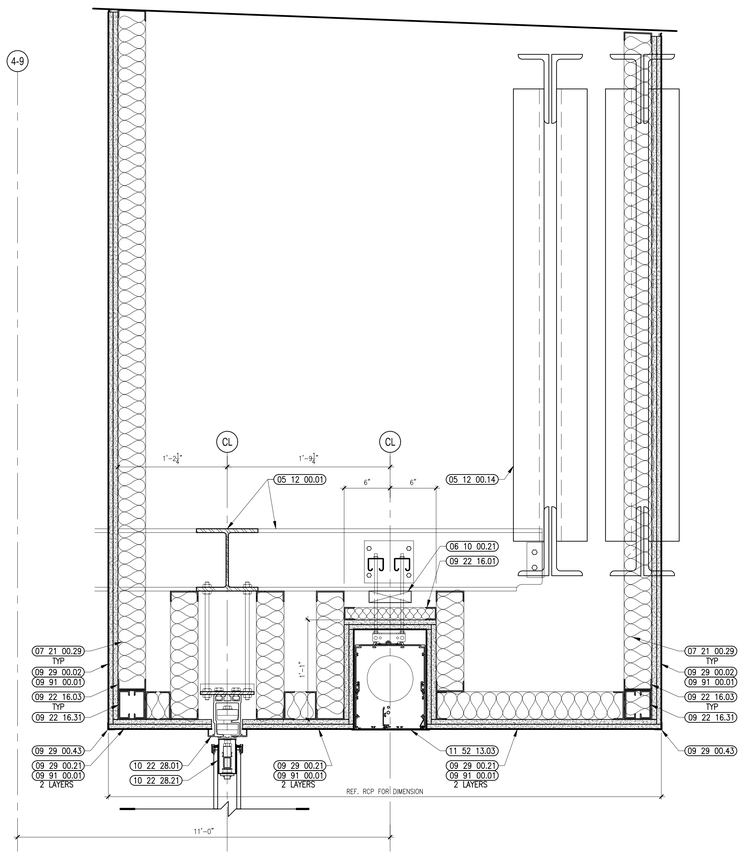

3 OPERABLE WALL PARTITION HEAD DETAIL
1-1/2" = 1'-0"

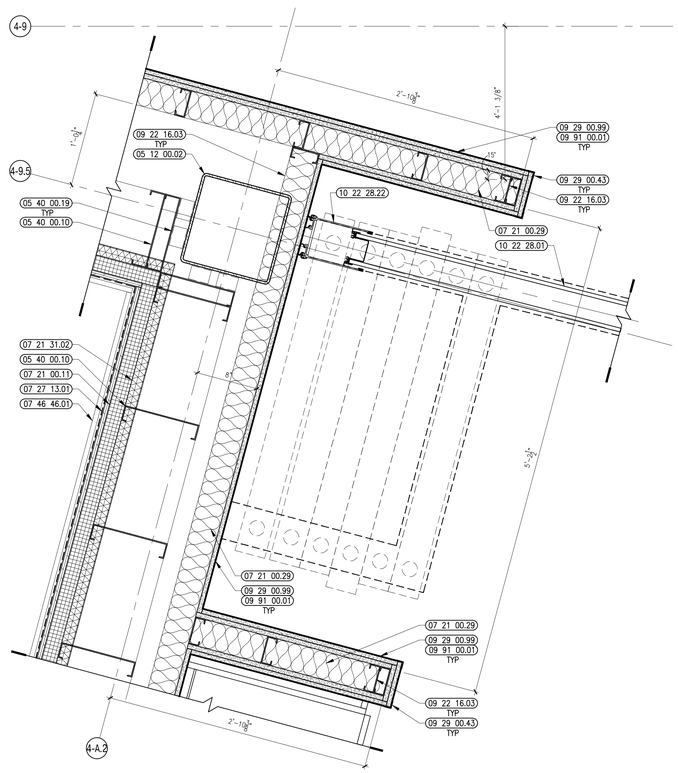

2 AUDITORIUM PLAN DETAIL
1-1/2" = 1'-0"

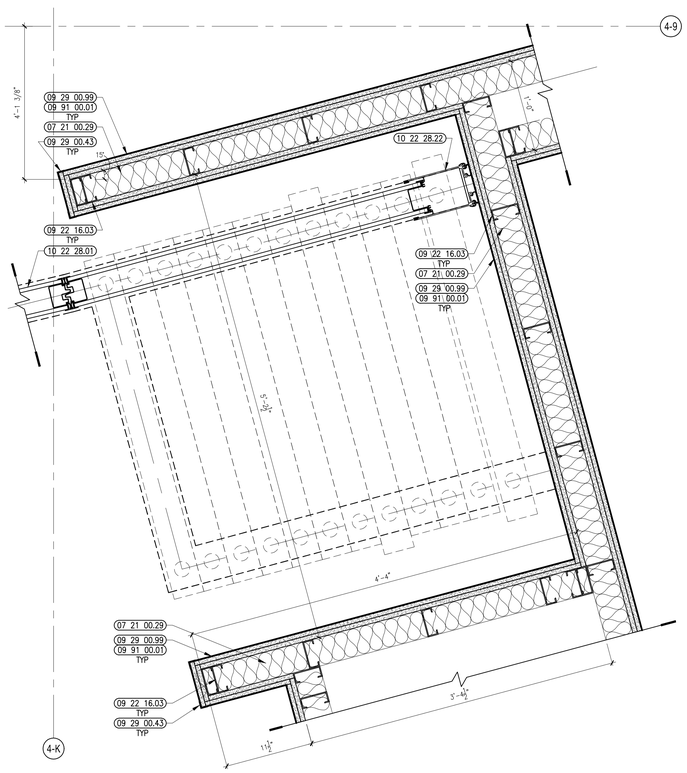

1 AUDITORIUM PLAN DETAIL
1-1/2" = 1'-0"

A13 architects
526 Boston Post Rd Wayland, MA
508.358.0790 www.a13architects.com

BEVERLY MIDDLE SCHOOL

CABOT STREET
BEVERLY, MA 01915

Copyright © 2016 A13 Architects, LLC

KEYNOTE LEGEND: (REFERENCE SHEETS A0.01 & A0.02 FOR MASTER KEYNOTE LIST AND KEYNOTES NOT LISTED)

05 12 00.01	STEEL BEAM – SEE STRUCTURAL
05 12 00.02	STEEL COLUMN – SEE STRUCTURAL
05 12 00.14	STEEL TRUSS – SEE STRUCTURAL
05 40 00.10	STEEL STUDS – 10 INCH – 16 INCHES O.C. MAX
05 40 00.19	STEEL Z–CLIP – 16 GAGE MIN. – 1 INCH MIN. DEPTH – 16 INCHES O.C. MAX
06 10 00.21	WOOD BLOCKING – 2X FIRE RETARDANT TREATED – SIZE AS NOTED OR DRAWN
07 21 00.11	INSULATING NAIL BASE – 2 INCH – EXTERIOR WALL
07 21 00.29	GLASS FIBER ACOUSTICAL BLANKET INSULATION – MATCH DEPTH OF STUD – UNFACED
07 21 31.02	FOAM INSULATION – SPRAYED–IN–PLACE – 1–1/2 INCH DEPTH BETWEEN STUDS
07 27 13.01	AIR/VAPOR BARRIER MEMBRANE – SELF–ADHERING
07 46 46.01	MINERAL FIBER CEMENT SIDING PANEL
09 22 16.01	METAL STUD 1–5/8 INCH – 16 INCHES O.C. MAX
09 22 16.03	METAL STUD 3–5/8 INCH – 16 INCHES O.C. MAX
09 22 16.31	BOXED HEADER
09 29 00.02	5/8 INCH GYPSUM BOARD – 2 LAYERS – LEVEL 4 FINISH
09 29 00.21	5/8 INCH GYPSUM BOARD – SAG–RESISTANT – LEVEL 4 FINISH
09 29 00.43	CORNER BEAD
09 29 00.99	GYPSUM BOARD SYSTEM – LEVEL 4 FINISH – REFER TO FLOOR PLANS AND WALL TYPES FOR COMPONENTS
09 91 00.01	PAINT – SEE SCHEDULE
10 22 28.01	FOLDING PANEL PARTITION
10 22 28.02	FOLDING PANEL PARTITION DOOR
10 22 28.03	FOLDING PANEL PARTITION MARKERBOARD
10 22 28.21	OPERABLE WALL PARTITION TRACK ASSEMBLY
10 22 28.22	STACKING LEVEL CLOSURE
10 22 28.23	WOVEN FABRIC FINISH
11 52 13.03	PROJECTION SCREEN – TYPE 3 – BAND

90% CONSTRUCTION DOCUMENTS

NOT FOR CONSTRUCTION

NORTH ARROW

KEYPLAN

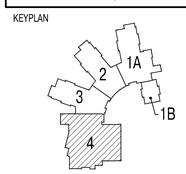

DRAWING NAME:

AUDITORIUM OPERABLE WALL PARTITION DETAILS

DRAWN BY:	HM
REVIEWED BY:	BPH
SCALE:	As Noted
JOB NO.:	1403.00
DATE:	July 25, 2016
DRAWING NUMBER:	A10.49

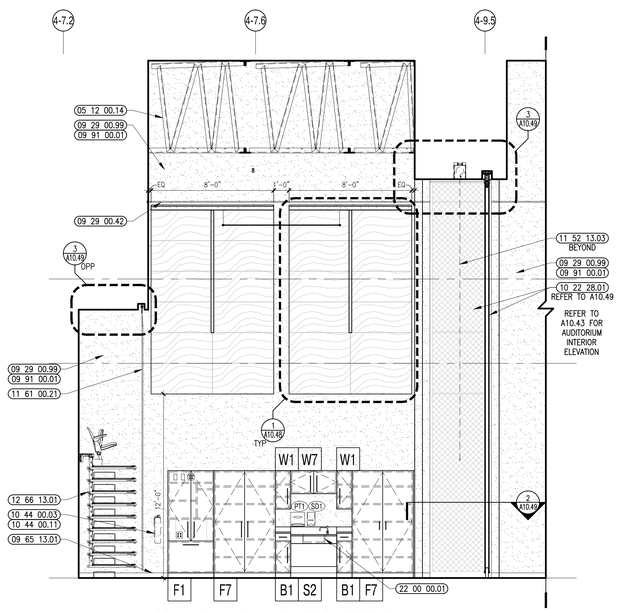

3 BAND/CHORAL INTERIOR ELEVATION
1/4" = 1'-0"

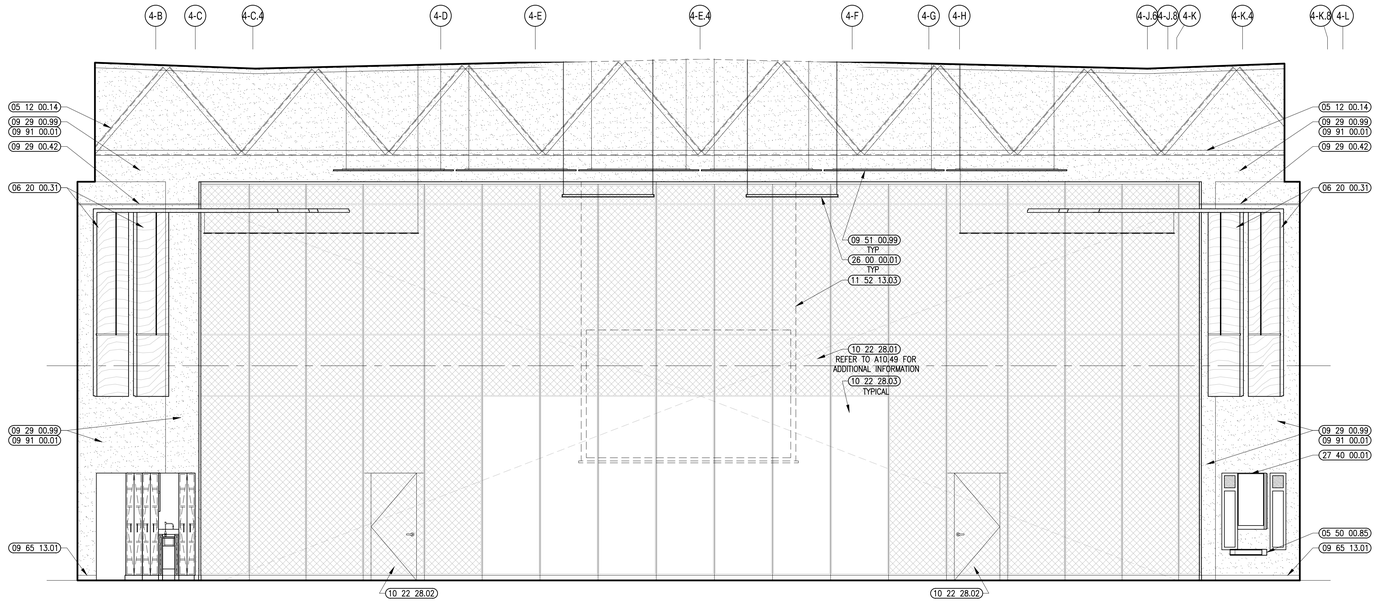

2 BAND/CHORAL INTERIOR ELEVATION
1/4" = 1'-0"

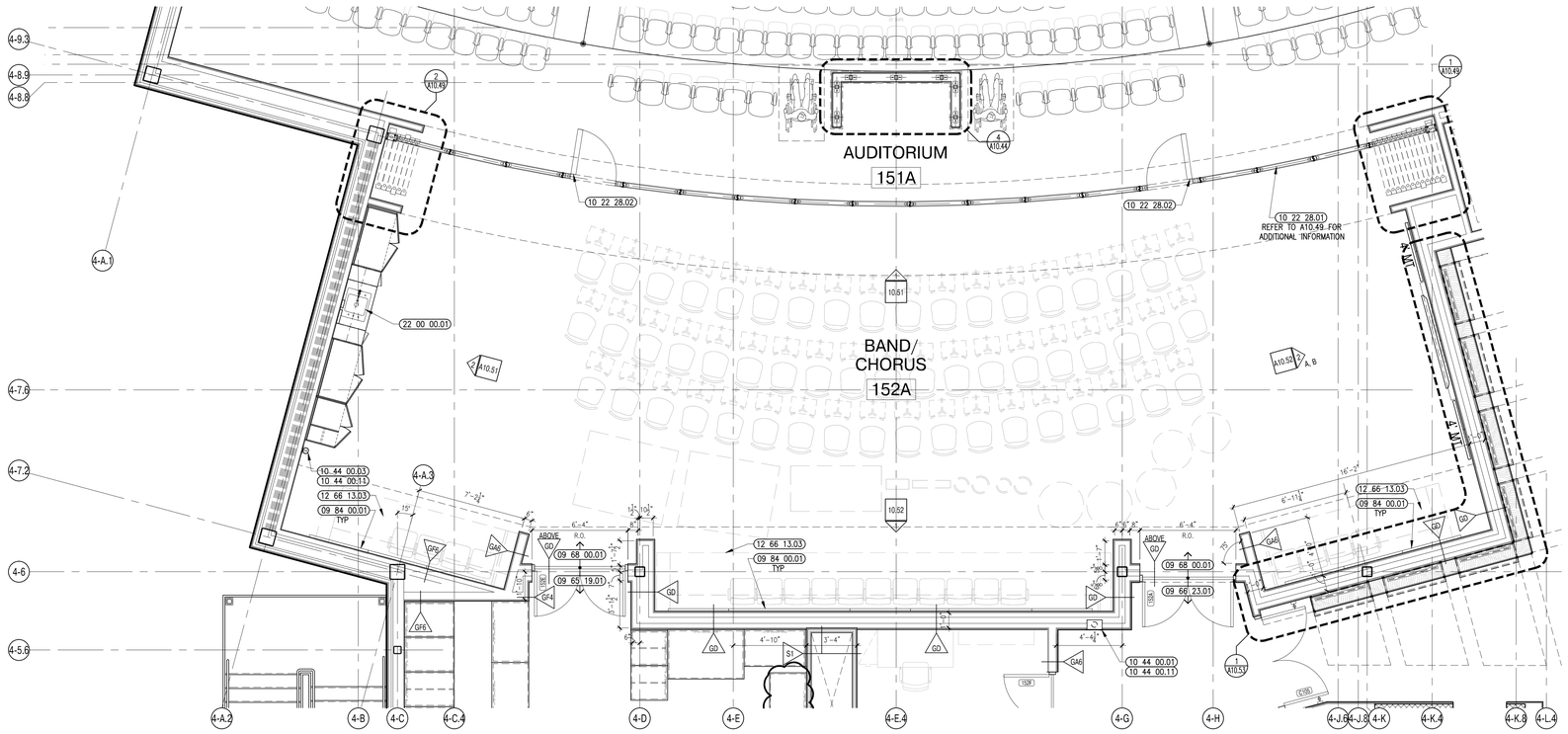

1 BAND/CHORAL ENLARGED PLAN
1/4" = 1'-0"

Ai3 architects
526 Boston Post Rd Wayland, MA
508.358.0790 www.ai3architects.com

BEVERLY MIDDLE SCHOOL

CABOT STREET
BEVERLY, MA 01915

Copyright © 2016 Ai3 Architects, LLC

KEYNOTE LEGEND: (REFERENCE SHEETS A0.01 & A0.02 FOR MASTER KEYNOTE LIST AND KEYNOTES NOT LISTED)

05 12 00.14	STEEL TRUSS – SEE STRUCTURAL
05 50 00.85	ALUMINUM MARKER TROUGH
06 20 00.31	HARDWOOD VENEER PLYWOOD – 1/2 INCH – TRANSPARENT FINISH
09 29 00.42	REVEAL – PAINTABLE 3/4 INCH
09 29 00.99	GYPSUM BOARD SYSTEM – LEVEL 4 FINISH – REFER TO FLOOR PLANS AND WALL TYPES FOR COMPONENTS
09 51 00.99	ACOUSTICAL CEILING – REFERENCE REFLECTED CEILING PLANS FOR TYPE AND HEIGHT
09 65 13.01	RUBBER BASE – 4"
09 65 19.01	VINYL COMPOSITION TILE
09 66 23.01	RESINOUS MATRIX TERRAZZO FLOORING
09 68 00.01	CARPET
09 84 00.01	ACOUSTICAL PANEL – WALL MOUNTED – TYPE 1
09 91 00.01	PAINT – SEE SCHEDULE
10 22 28.01	FOLDING PANEL PARTITION
10 22 28.02	FOLDING PANEL PARTITION DOOR
10 22 28.03	FOLDING PANEL PARTITION MARKERBOARD
10 44 00.01	FIRE EXTINGUISHER CABINET – FULLY RECESSED
10 44 00.03	FIRE EXTINGUISHER WALL MOUNTED BRACKET
10 44 00.11	FIRE EXTINGUISHER
11 52 13.03	PROJECTION SCREEN – TYPE 3 – BAND
11 61 00.21	CURATIN ASSEMBLY
12 66 13.01	TELESCOPING POWER ASSISTED WOOD BLEACHERS
12 66 13.03	PORTABLE TELESCOPING MANUAL WOOD BLEACHERS
22 00 00.01	SINK – SEE PLUMBING
26 00 00.01	LIGHT FIXTURE – SEE ELECTRICAL
27 40 00.01	LCD TV – SEE TECHNOLOGY

GENERAL NOTES:

1. NOT ALL POWER & DATA OUTLET/SWITCHING LOCATIONS SHOWN. CONTRACTOR TO REFER TO ELECTRICAL AND TECHNOLOGY DRAWINGS FOR LOCATIONS.
2. REFER TO DRAWING 2/A7.31 FOR FIRE EXTINGUISHER MOUNTING HEIGHTS.

90% CONSTRUCTION DOCUMENTS

NOT FOR CONSTRUCTION

NORTH ARROW

KEYPLAN

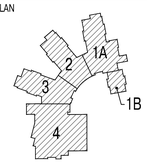

DRAWING NAME:

BAND/CHORAL ENLARGED PLAN & ELEVATIONS

DRAWN BY:	JMR/ MJR
REVIEWED BY:	BPH
SCALE:	As Noted
JOB NO.:	1403.00
DATE:	July 25, 2016
DRAWING NUMBER:	A10.51

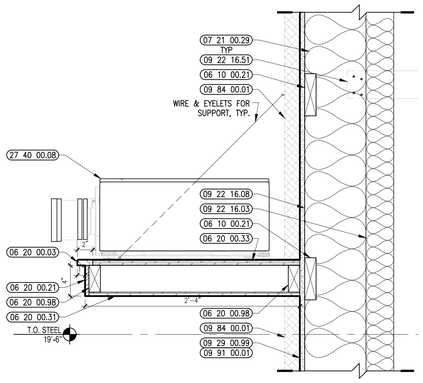

5 BAND/CHORAL PROJECTOR MOUNT SECTION
1 1/2" = 1'-0"

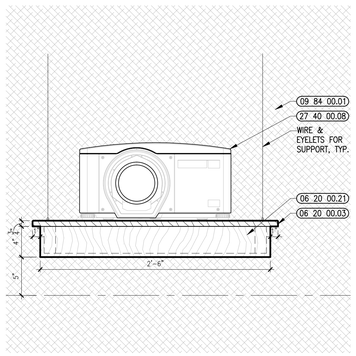

4 BAND/CHORAL PROJECTOR MOUNT ELEVATION
1 1/2" = 1'-0"

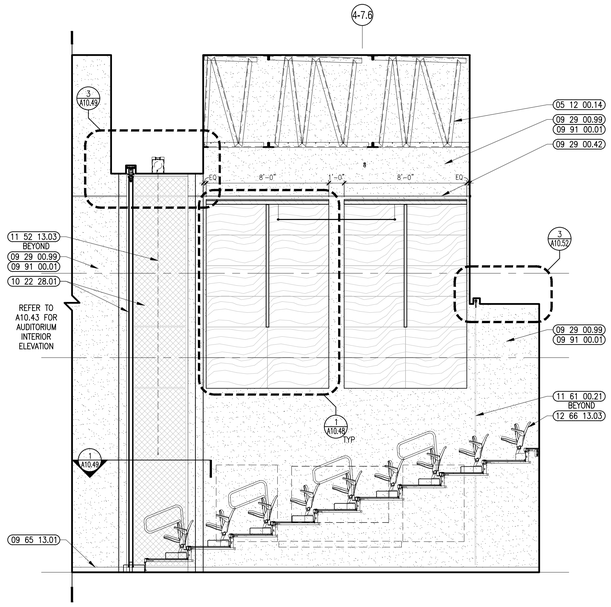

2B BAND/CHORAL INTERIOR ELEVATION
1/4" = 1'-0"

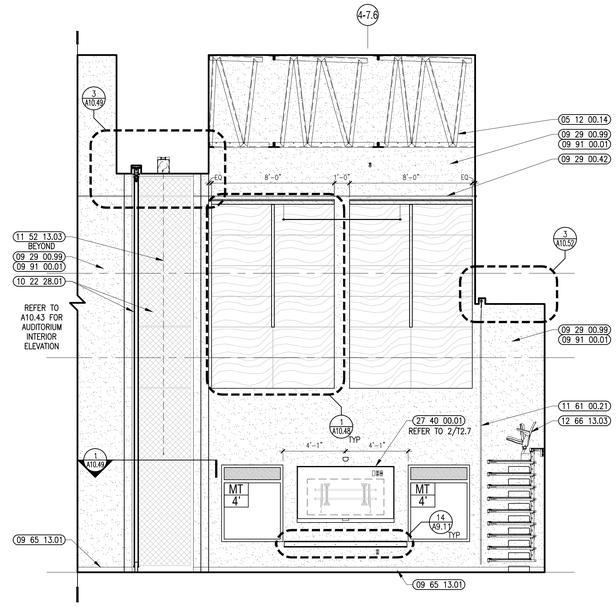

2A BAND/CHORAL INTERIOR ELEVATION
1/4" = 1'-0"

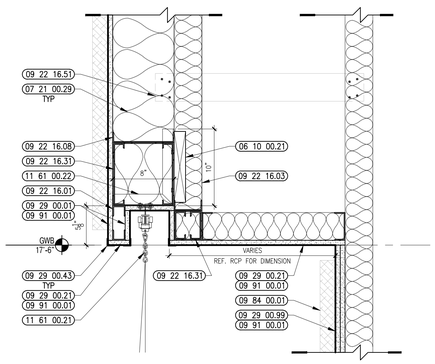

3 BAND/CHORAL SOFFIT DETAIL @ CURTAIN
1 1/2" = 1'-0"

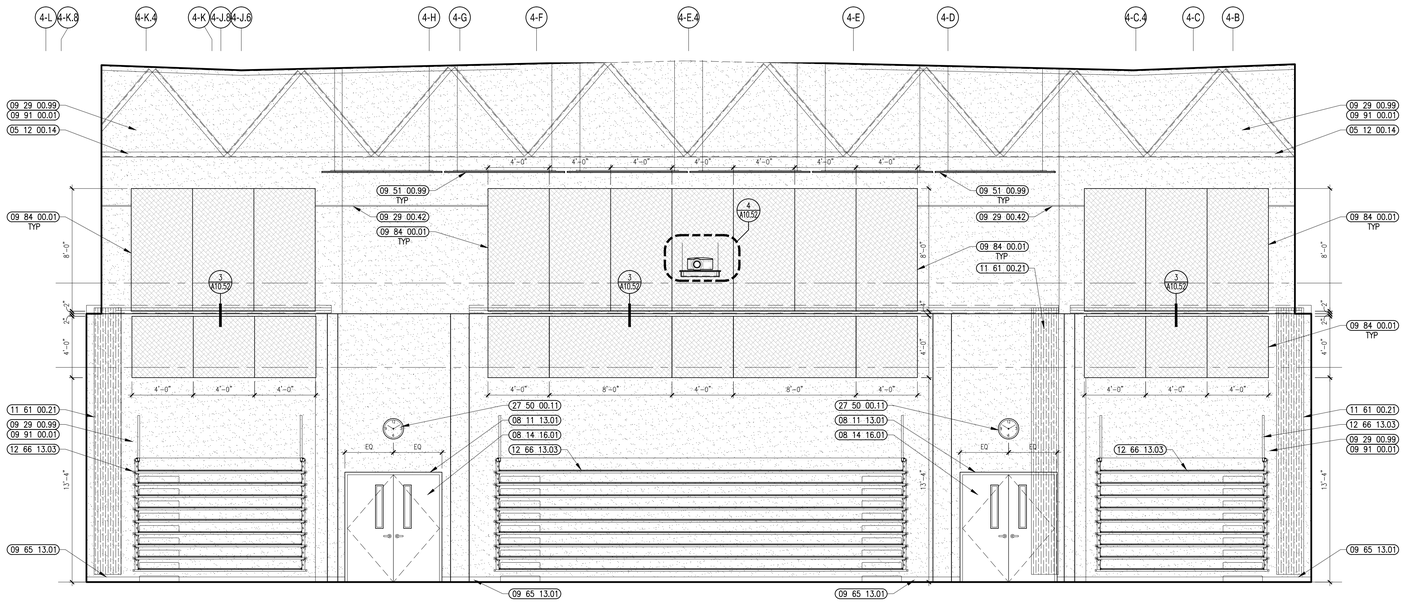

1 BAND/CHORAL INTERIOR ELEVATION
1/4" = 1'-0"

Ai3 architects
526 Boston Post Rd Wayland, MA
508.358.0790 www.ai3architects.com

BEVERLY MIDDLE SCHOOL

CABOT STREET
BEVERLY, MA 01915

Copyright © 2016 Ai3 Architects, LLC

KEYNOTE LEGEND: (REFERENCE SHEETS A0.01 & A0.02 FOR MASTER KEYNOTE LIST AND KEYNOTES NOT LISTED)

05 12 00.14	STEEL TRUSS – SEE STRUCTURAL
06 10 00.21	WOOD BLOCKING – 2X FIRE RETARDANT TREATED – SIZE AS NOTED OR DRAWN
06 20 00.03	HARDWOOD TRIM – 3/4 INCH – PENCILED EDGE 1/8 INCH RADIUS – TRANSPARENT FINISH
06 20 00.21	HARDWOOD TRIM – 1/2 INCH – TRANSPARENT FINISH
06 20 00.31	HARDWOOD VENEER PLYWOOD – 1/2 INCH – TRANSPARENT FINISH
06 20 00.33	HARDWOOD VENEER PLYWOOD – 3/4 INCH – TRANSPARENT FINISH
06 20 00.98	WOOD BLOCKING – FIRE RETARDANT TREATED – SIZE AS REQUIRED
07 21 00.29	GLASS FIBER ACOUSTICAL BLANKET INSULATION – MATCH DEPTH OF STUD – UNFACED
08 11 13.01	DOOR AND FRAME– SEE DOOR SCHEDULE
08 14 16.01	SOLID CORE FLUSH WOOD DOOR– SEE DOOR SCHEDULE
09 22 16.01	METAL STUD 1–5/8 INCH – 16 INCHES O.C. MAX
09 22 16.03	METAL STUD 3–5/8 INCH – 16 INCHES O.C. MAX
09 22 16.08	METAL STUD 8 INCH – 16 INCHES O.C. MAX
09 22 16.31	BOXED HEADER
09 22 16.51	METAL STUD BRACE
09 29 00.01	5/8 INCH GYPSUM BOARD – LEVEL 4 FINISH
09 29 00.21	5/8 INCH GYPSUM BOARD – SAG–RESISTANT – LEVEL 4 FINISH
09 29 00.42	REVEAL – PAINTABLE 3/4 INCH
09 29 00.43	CORNER BEAD
09 29 00.99	GYPSUM BOARD SYSTEM – LEVEL 4 FINISH – REFER TO FLOOR PLANS AND WALL TYPES FOR COMPONENTS
09 51 00.99	ACOUSTICAL CEILING – REFERENCE REFLECTED CEILING PLANS FOR TYPE AND HEIGHT
09 65 13.01	RUBBER BASE – 4"
09 84 00.01	ACOUSTICAL PANEL – WALL MOUNTED – TYPE 1
09 91 00.01	PAINT – SEE SCHEDULE
10 22 28.01	FOLDING PANEL PARTITION
11 52 13.03	PROJECTION SCREEN – TYPE 3 – BAND
11 61 00.21	CURATIN ASSEMBLY
11 61 00.22	STEEL ANGLES WITH PRE–PUNCHED HOLES – SIZE AND GAGE AS REQUIRED
12 66 13.03	PORTABLE TELESCOPING MANUAL WOOD BLEACHERS
27 40 00.01	LCD TV – SEE TECHNOLOGY
27 40 00.08	PROJECTOR – SEE TECHNOLOGY
27 50 00.11	CLOCK – SEE TECHNOLOGY

GENERAL NOTES:

1. NOT ALL POWER & DATA OUTLET/SWITCHING LOCATIONS SHOWN. CONTRACTOR TO REFER TO ELECTRICAL AND TECHNOLOGY DRAWINGS FOR LOCATIONS.

90% CONSTRUCTION DOCUMENTS

NOT FOR CONSTRUCTION

NORTH ARROW

KEYPLAN

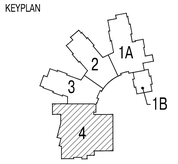

DRAWING NAME:

BAND/CHORAL ELEVATIONS & DETAILS

DRAWN BY:	JMR/ MJR
REVIEWED BY:	BPH
SCALE:	As Noted
JOB NO.:	1403.00
DATE:	July 25, 2016
DRAWING NUMBER:	A10.52

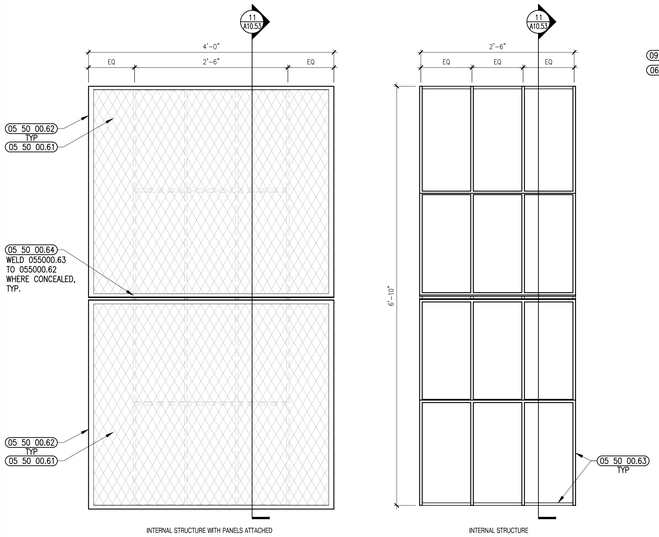

12 FOLDING PANEL ELEVATION - B
1" = 1'-0"

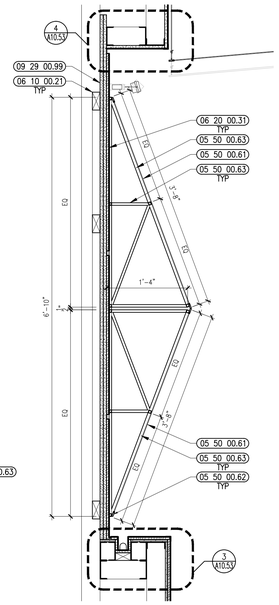

11 FOLDING PANEL SECTION - B
1" = 1'-0"

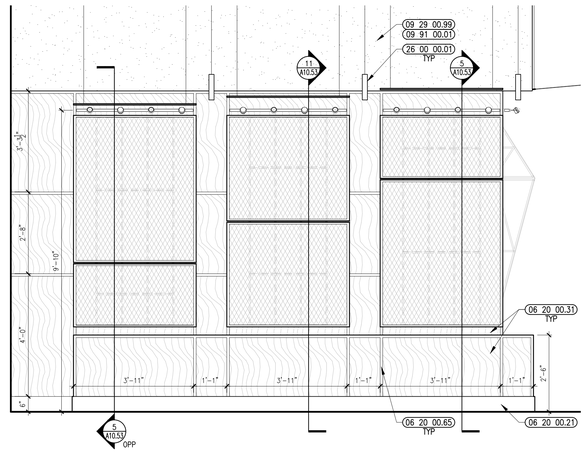

10 FOLDING PANELS INTERIOR ELEVATION
1/2" = 1'-0"

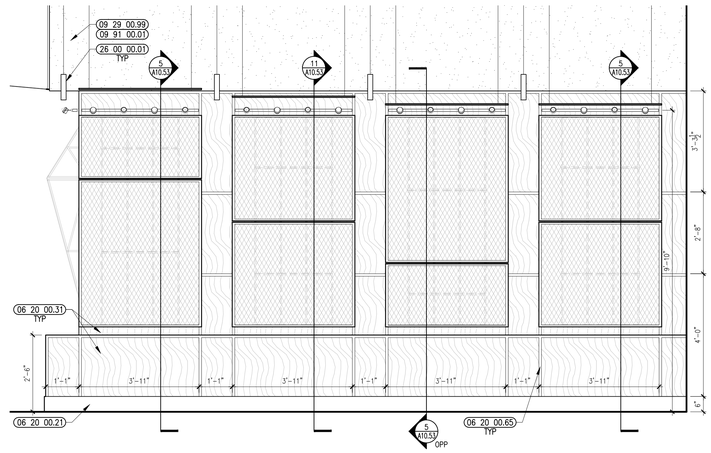

9 FOLDING PANELS INTERIOR ELEVATION
1/2" = 1'-0"

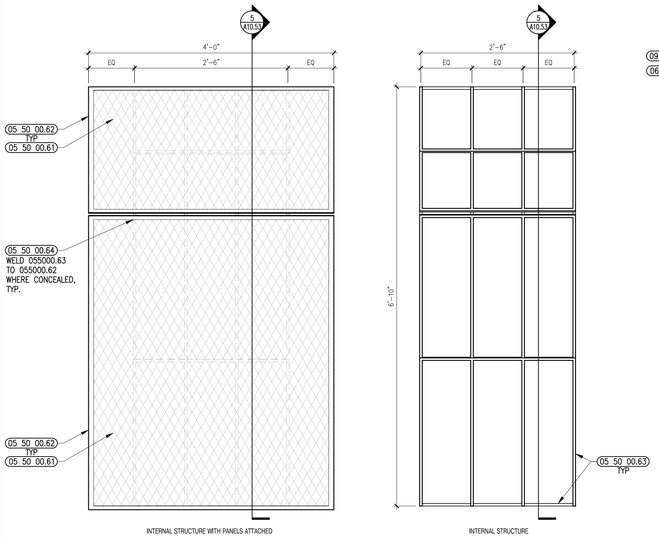

6 FOLDING PANEL ELEVATION - A
1" = 1'-0"

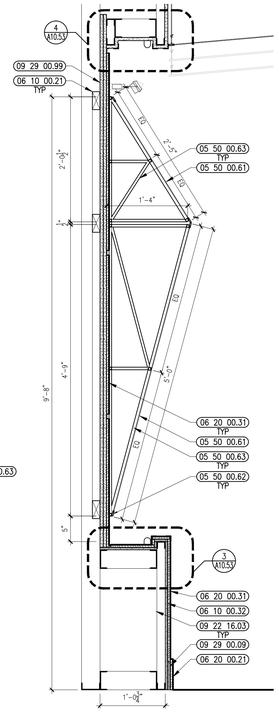

5 FOLDING PANEL SECTION - A
1" = 1'-0"

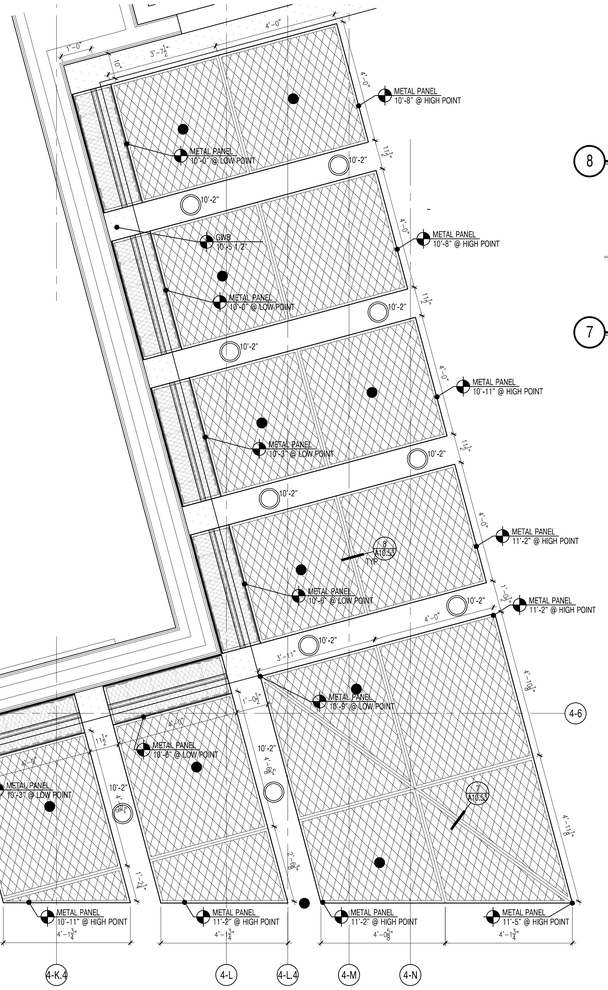

2 ENLARGED REFLECTED CEILING PLAN
1/2" = 1'-0"

8 PANEL MOUNT DETAIL, TYP.
3" = 1'-0"

7 PANEL MOUNT DETAIL
3" = 1'-0"

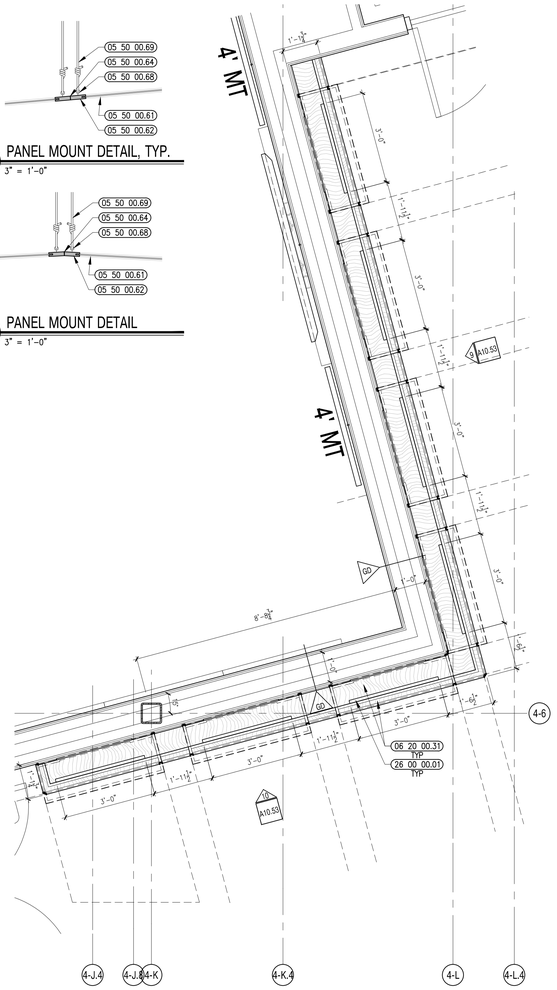

1 ENLARGED PLAN
1/2" = 1'-0"

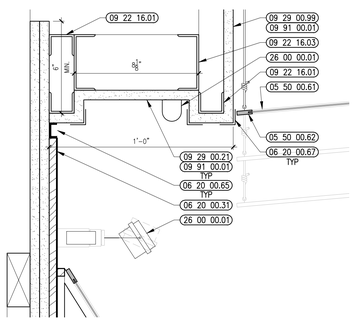

4 SOFFIT DETAIL
3" = 1'-0"

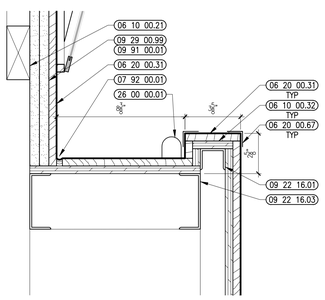

3 RECESSED LIGHT DETAIL
3" = 1'-0"

526 Boston Post Rd Wayland, MA
508.358.0790 www.ai3architects.com

BEVERLY MIDDLE SCHOOL

CABOT STREET
BEVERLY, MA 01915

Copyright © 2016 Ai3 Architects, LLC

KEYNOTE LEGEND: (REFERENCE SHEETS A0.01 & A0.02 FOR MASTER KEYNOTE LIST AND KEYNOTES NOT LISTED)

05 50 00.61	CORE DRILL 4 INCH x 12 INCH DEEP POST PLACEMENT – GROUT SOLID TYPICAL
05 50 00.62	CORE DRILL 4 INCH x 12 INCH DEEP POST PLACEMENT – GROUT SOLID TYPICAL
05 50 00.63	STAINLESS STEEL BAR 1/2 INCH x 1/2 INCH
05 50 00.64	WELD TO STEEL FRAMING
05 50 00.68	CORE DRILL 4 INCH x 12 INCH DEEP POST PLACEMENT – GROUT SOLID TYPICAL
05 50 00.69	CORE DRILL 4 INCH x 12 INCH DEEP POST PLACEMENT – GROUT SOLID TYPICAL
06 10 00.21	GROMMET – 3 INCH – PLASTIC
06 10 00.32	PLYWOOD – 1/2 INCH
06 20 00.21	HARDWOOD TRIM – 1/2 INCH – TRANSPARENT FINISH
06 20 00.31	GROMMET – 3 INCH – PLASTIC
06 20 00.65	GROMMET – 3 INCH – PLASTIC
06 20 00.67	GROMMET – 3 INCH – PLASTIC
07 92 00.01	JOINT SEALANT – TYPE AS REQUIRED
09 22 16.01	METAL STUD 1–5/8 INCH – 16 INCHES O.C. MAX
09 22 16.03	METAL STUD 3–5/8 INCH – 16 INCHES O.C. MAX
09 29 00.09	1/2 INCH PLYWOOD – FIRE RETARDANT TREATED
09 29 00.21	5/8 INCH GYPSUM BOARD – SAG–RESISTANT – LEVEL 4 FINISH
09 29 00.99	GYPSUM BOARD SYSTEM – LEVEL 4 FINISH – REFER TO FLOOR PLANS AND WALL TYPES FOR COMPONENTS
09 91 00.01	PAINT – SEE SCHEDULE
26 00 00.01	ELECTRICAL PANEL – SEE ELECTRICAL

90% CONSTRUCTION DOCUMENTS

NOT FOR CONSTRUCTION

NORTH ARROW

KEYPLAN

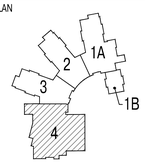

DRAWING NAME:

BAND/CHORAL CORRIDOR DETAILS

DRAWN BY:	JMR
REVIEWED BY:	BPH
SCALE:	As Noted
JOB NO.:	1403.00
DATE:	July 25, 2016
DRAWING NUMBER:	A10.53

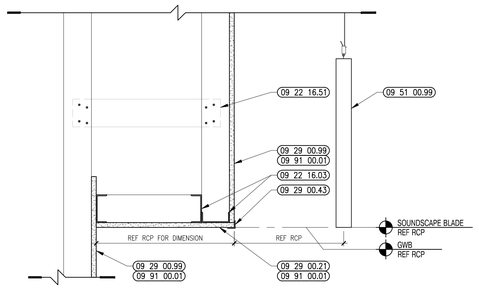

7 SOFFIT DESIGN
1 1/2" = 1'-0"

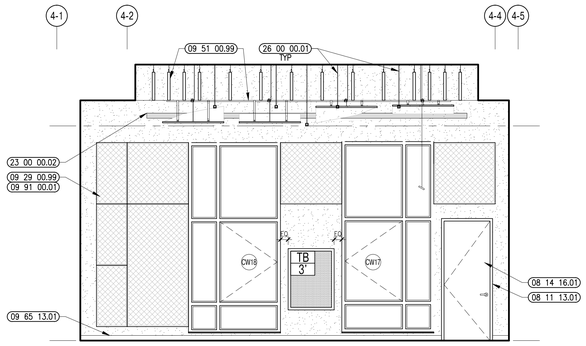

6 SET DESIGN & CONSTRUCTION INTERIOR ELEV
1/4" = 1'-0"

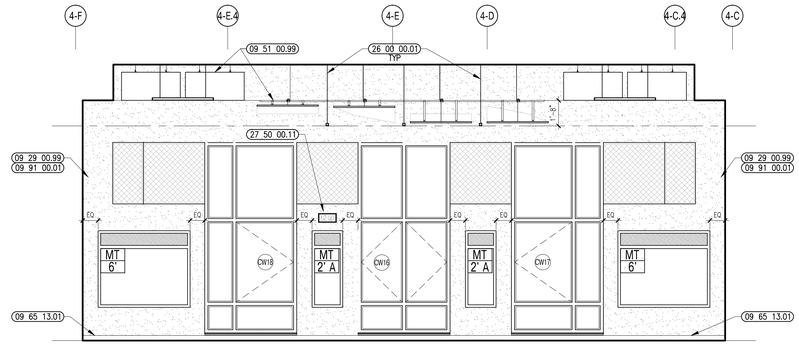

5 SET DESIGN & CONSTRUCTION INTERIOR ELEV
1/4" = 1'-0"

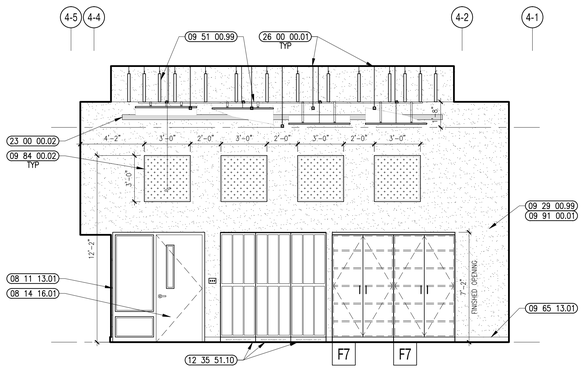

4 SET DESIGN & CONSTRUCTION INTERIOR ELEV
1/4" = 1'-0"

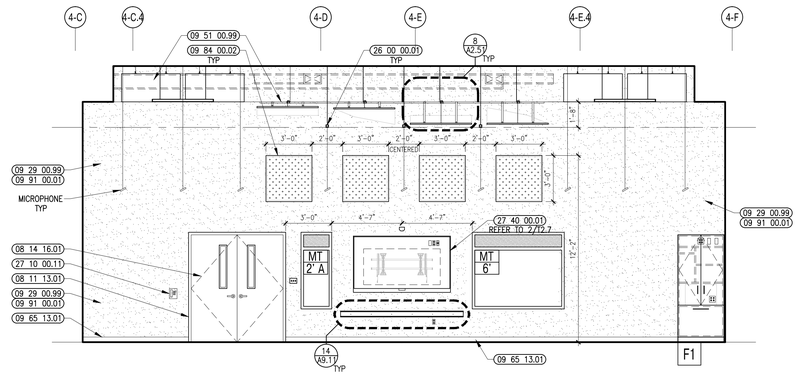

3 SET DESIGN & CONSTRUCTION INTERIOR ELEV
1/4" = 1'-0"

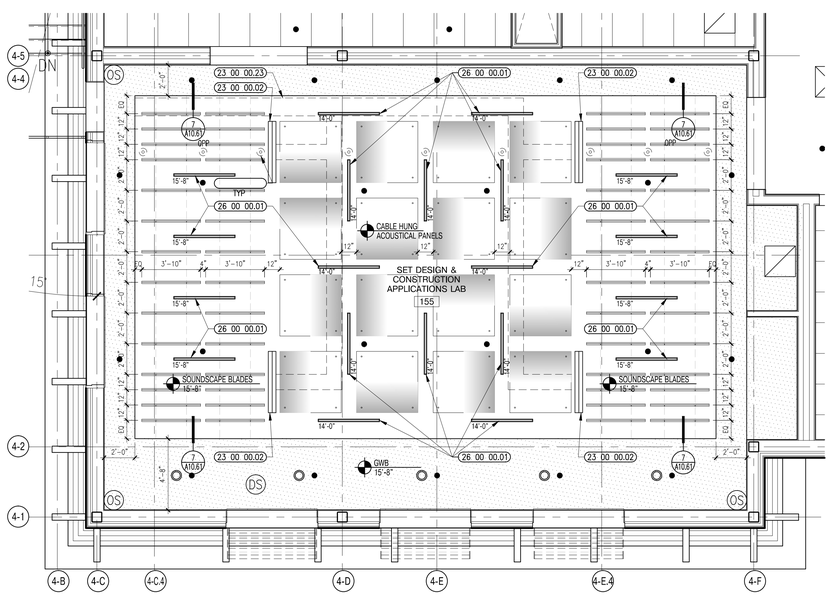

2 SET DESIGN & CONSTRUCTION REFLECTED CEILING PLAN
1/4" = 1'-0"

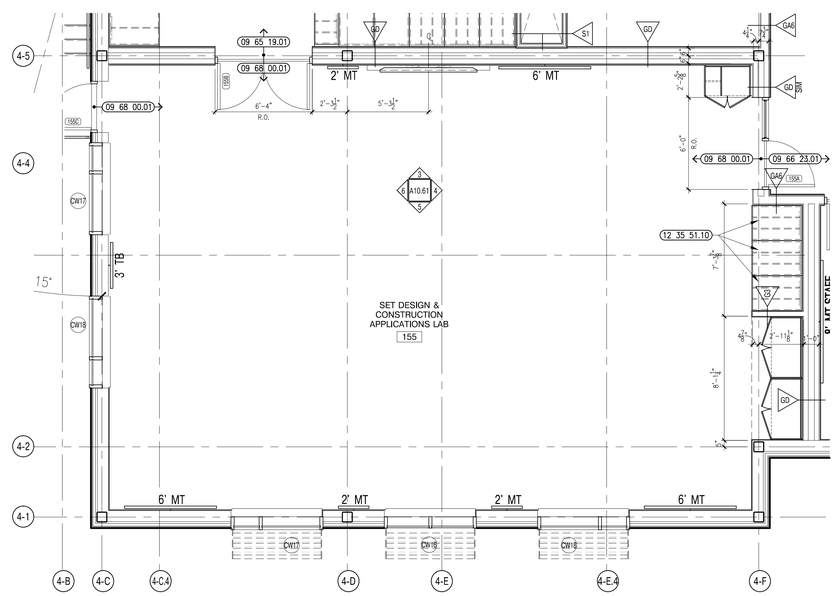

1 SET DESIGN & CONSTRUCTION ENLARGED PLAN
1/4" = 1'-0"

architects
526 Boston Post Rd Wayland, MA
508.358.0790 www.ai3architects.com

BEVERLY MIDDLE SCHOOL

CABOT STREET
BEVERLY, MA 01915

Copyright © 2016 AI3 Architects, LLC

KEYNOTE LEGEND: (REFERENCE SHEETS A0.01 & A0.02 FOR MASTER KEYNOTE LIST AND KEYNOTES NOT LISTED)

08 11 13.01	DOOR AND FRAME– SEE DOOR SCHEDULE
08 14 16.01	SOLID CORE FLUSH WOOD DOOR– SEE DOOR SCHEDULE
09 22 16.03	METAL STUD 3–5/8 INCH – 16 INCHES O.C. MAX
09 22 16.51	METAL STUD BRACE
09 29 00.21	5/8 INCH GYPSUM BOARD – SAG–RESISTANT – LEVEL 4 FINISH
09 29 00.43	CORNER BEAD
09 29 00.99	GYPSUM BOARD SYSTEM – LEVEL 4 FINISH – REFER TO FLOOR PLANS AND WALL TYPES FOR COMPONENTS
09 51 00.99	ACOUSTICAL CEILING – REFERENCE REFLECTED CEILING PLANS FOR TYPE AND HEIGHT
09 65 13.01	RUBBER BASE – 4"
09 65 19.01	VINYL COMPOSITION TILE
09 66 23.01	RESINOUS MATRIX TERRAZZO FLOORING
09 68 00.01	CARPET
09 84 00.02	ACOUSTICAL PANEL – WALL MOUNTED – TYPE 2
09 91 00.01	PAINT – SEE SCHEDULE
12 35 51.10	MUSIC LIBRARY STORAGE SYSTEM
23 00 00.02	DIFFUSER – SEE HVAC
23 00 00.23	DUCT – SEE HVAC
26 00 00.01	LIGHT FIXTURE – SEE ELECTRICAL
27 10 00.11	TELEPHONE JACK – SEE TECHNOLOGY – TELEPHONE DEVICE TO BE OWNER FURNISHED AND INSTALLED
27 40 00.01	LCD TV – SEE TECHNOLOGY
27 50 00.11	CLOCK – SEE TECHNOLOGY

GENERAL NOTES:

1. NOT ALL POWER & DATA OUTLET/SWITCHING LOCATIONS SHOWN. CONTRACTOR TO REFER TO ELECTRICAL AND TECHNOLOGY DRAWINGS FOR LOCATIONS.
2. REFER TO DRAWING 2/A7.31 FOR FIRE EXTINGUISHER MOUNTING HEIGHTS.
3. REFER TO 3/A7.31 FOR 101116.01 EDGE DETAILS, TYP.

90% CONSTRUCTION DOCUMENTS

NOT FOR CONSTRUCTION

NORTH ARROW

KEYPLAN

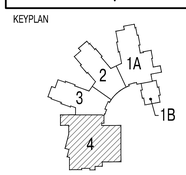

DRAWING NAME:

SET DESIGN & CONSTRUCTION PLANS, DETAILS & ELEVATIONS

DRAWN BY:	JMR
REVIEWED BY:	BPH
SCALE:	As Noted
JOB NO.:	1403.00
DATE:	July 25, 2016
DRAWING NUMBER:	A10.61

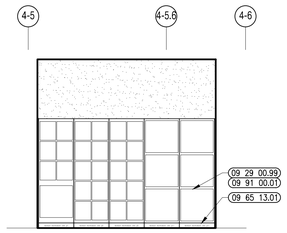

16 BAND/CHORUS STORAGE INTERIOR ELEV
1/4" = 1'-0"

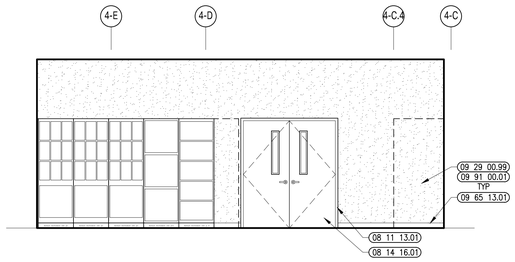

15 BAND/CHORUS STORAGE INTERIOR ELEV
1/4" = 1'-0"

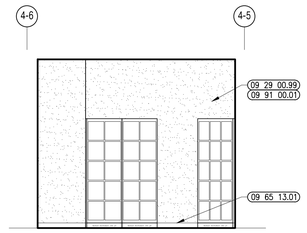

14 BAND/CHORUS STORAGE INTERIOR ELEV
1/4" = 1'-0"

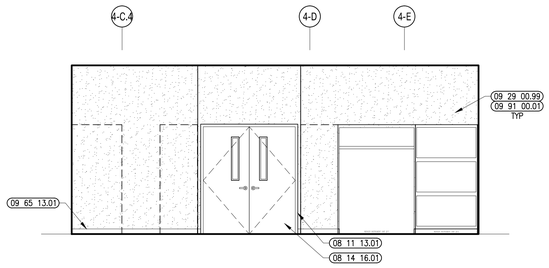

13 BAND/CHORUS STORAGE INTERIOR ELEV
1/4" = 1'-0"

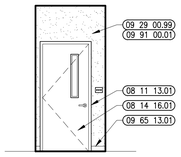

12 MUSIC PRACTICE INTERIOR ELEV
1/4" = 1'-0"

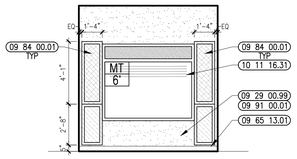

11 MUSIC PRACTICE INTERIOR ELEV
1/4" = 1'-0"

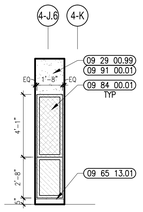

10 MUSIC PRACTICE INTERIOR ELEV
1/4" = 1'-0"

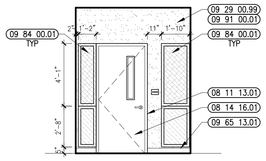

9 MUSIC PRACTICE INTERIOR ELEV
1/4" = 1'-0"

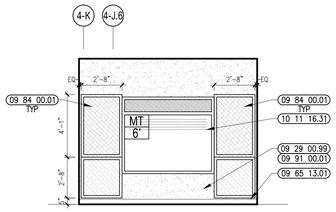

8 MUSIC PRACTICE INTERIOR ELEV
1/4" = 1'-0"

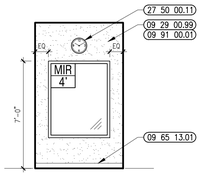

7 MUSIC PRACTICE INTERIOR ELEV
1/4" = 1'-0"

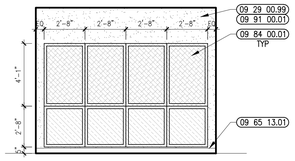

6 MUSIC PRACTICE INTERIOR ELEV
1/4" = 1'-0"

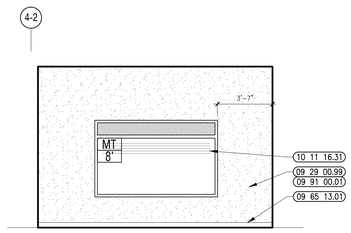

5 MIDI LAB INTERIOR ELEVATION
1/4" = 1'-0"

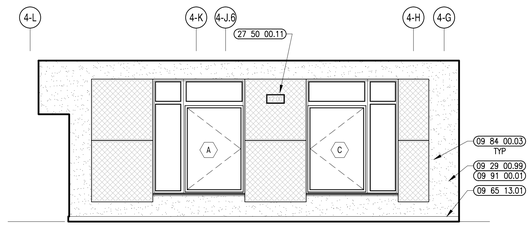

4 MIDI LAB INTERIOR ELEVATION
1/4" = 1'-0"

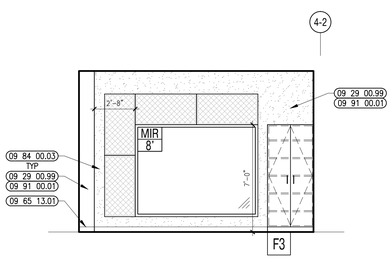

3 MIDI LAB INTERIOR ELEVATION
1/4" = 1'-0"

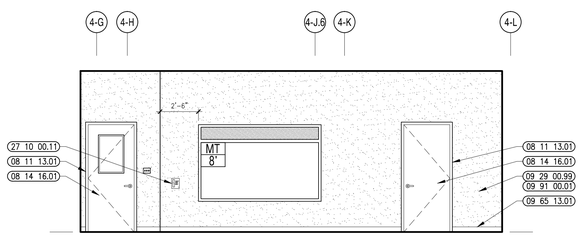

2 MIDI LAB INTERIOR ELEVATION
1/4" = 1'-0"

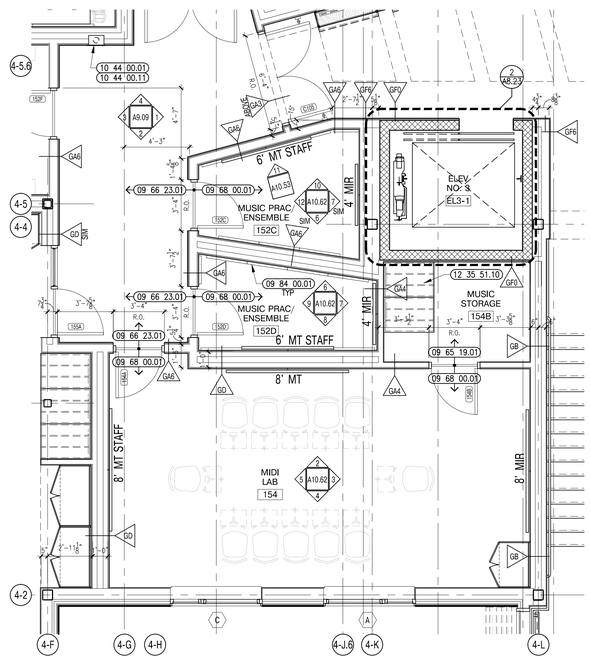

1 MIDI LAB & MUSIC ENLARGED PLAN
1/4" = 1'-0"

Ai3 architects
526 Boston Post Rd Wayland, MA
508.358.0790 www.ai3architects.com

BEVERLY MIDDLE SCHOOL

CABOT STREET
BEVERLY, MA 01915

Copyright © 2016 Ai3 Architects, LLC

KEYNOTE LEGEND: (REFERENCE SHEETS A0.01 & A0.02 FOR MASTER KEYNOTE LIST AND KEYNOTES NOT LISTED)

08 11 13.01	DOOR AND FRAME– SEE DOOR SCHEDULE
08 14 16.01	SOLID CORE FLUSH WOOD DOOR– SEE DOOR SCHEDULE
09 29 00.99	GYPSUM BOARD SYSTEM – LEVEL 4 FINISH – REFER TO FLOOR PLANS AND WALL TYPES FOR COMPONENTS
09 65 13.01	RUBBER BASE – 4"
09 65 19.01	VINYL COMPOSITION TILE
09 66 23.01	RESINOUS MATRIX TERRAZZO FLOORING
09 68 00.01	CARPET
09 84 00.01	ACOUSTICAL PANEL – WALL MOUNTED – TYPE 1
09 84 00.03	ACOUSTICAL PANEL – WALL MOUNTED – TYPE 3
09 91 00.01	PAINT – SEE SCHEDULE
10 11 16.31	SILK SCREEN – MUSIC STAFF LINING
10 44 00.01	FIRE EXTINGUISHER CABINET – FULLY RECESSED
10 44 00.11	FIRE EXTINGUISHER
12 35 51.10	MUSIC LIBRARY STORAGE SYSTEM
27 10 00.11	TELEPHONE JACK – SEE TECHNOLOGY – TELEPHONE DEVICE TO BE OWNER FURNISHED AND INSTALLED
27 50 00.11	CLOCK – SEE TECHNOLOGY

GENERAL NOTES:

1. NOT ALL POWER & DATA OUTLET/SWITCHING LOCATIONS SHOWN. CONTRACTOR TO REFER TO ELECTRICAL AND TECHNOLOGY DRAWINGS FOR LOCATIONS.

90% CONSTRUCTION DOCUMENTS

NOT FOR CONSTRUCTION

NORTH ARROW

KEYPLAN

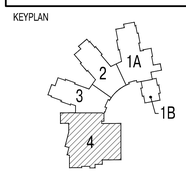

DRAWING NAME:

MIDI LAB & MUSIC PRACTICE PLANS, ELEVATIONS & DETAILS

DRAWN BY:	JMR
REVIEWED BY:	BPH
SCALE:	As Noted
JOB NO.:	1403.00
DATE:	July 25, 2016
DRAWING NUMBER:	A10.62

ROOM FINISH SCHEDULE

BUS DEPOT BUILDING		FLOOR MATERIAL	BASE MATERIAL	WALL MATERIAL				CEILING		NOTES
ROOM #	ROOM NAME			N	E	S	W	MATERIAL	HEIGHT	
BD01	ENTRY			P	P	P	P		REFER TO RCP	
BD02	SECRETARY AREA			P	P	P	P		REFER TO RCP	
BD03	OFFICE/STORAGE			P	P	P	P		REFER TO RCP	
BD04	OFFICE			P	P	P	P		REFER TO RCP	
BD05	OFFICE			P	P	P	P		REFER TO RCP	
BD06	DISPATCH OFFICE			P	P	P	P		REFER TO RCP	
BD07	TRAINING OFFICE			P	P	P	P		REFER TO RCP	
BD08	STORAGE			P	P	P	P		REFER TO RCP	
BD09	BREAK/KITCHENETTE			P	P	P	P		REFER TO RCP	
BD10	TOILET			P	P	P	P		REFER TO RCP	
BD11	TOILET			P	P	P	P		REFER TO RCP	

DOOR SCHEDULE

BUS DEPOT BUILDING		DOOR					FRAME					HDW SET	FIRE RATING	REMARKS
DOOR #	ROOM NAME	DR SIZE	TYPE	MAT'L.	THK.	DR FIN	TYPE	MAT'L.	HEAD	JAMB	FIN.			
BD01	ENTRY													
BD02	SECRETARY AREA													
BD03	OFFICE/STORAGE													
BD04	OFFICE													
BD05	OFFICE													
BD06	DISPATCH OFFICE													
BD07	TRAINING OFFICE													
BD08	STORAGE													
BD09	BREAK/KITCHENETTE													
BD10	TOILET													
BD11	TOILET													

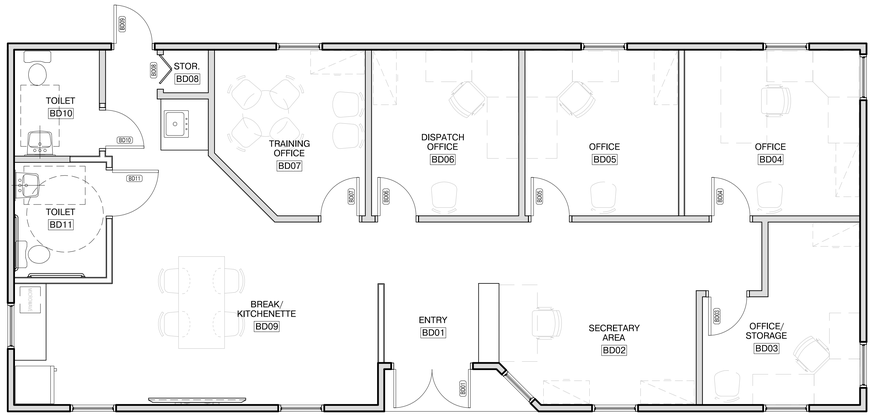

2 BUS DEPOT BUILDING FLOOR PLAN
1/4"=1'-0"

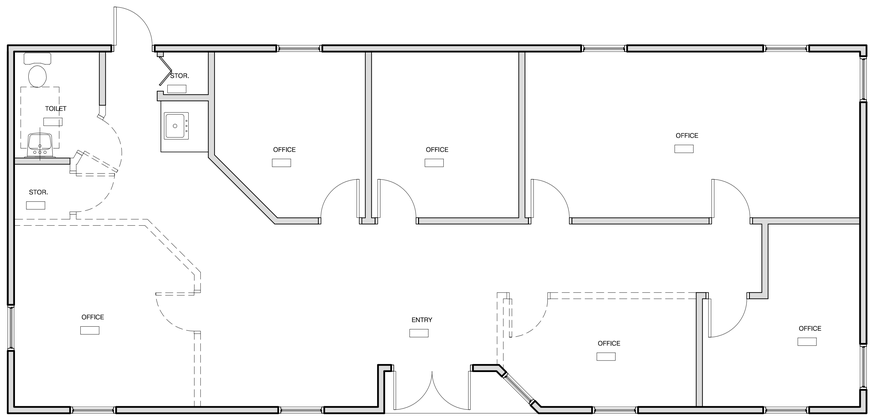

1 BUS DEPOT BUILDING DEMOLITION PLAN
1/4"=1'-0"

526 Boston Post Rd Wayland, MA
508.358.0790 www.ai3architects.com

BEVERLY MIDDLE SCHOOL

CABOT STREET
BEVERLY, MA 01915

KEYNOTE LEGEND: (REFERENCE SHEETS A0.01 & A0.02 FOR MASTER KEYNOTE LIST AND KEYNOTES NOT LISTED)

90% CONSTRUCTION DOCUMENTS

NOT FOR CONSTRUCTION

NORTH ARROW

KEYPLAN

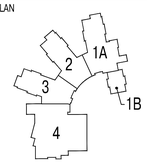

DRAWING NAME:

BUS DEPOT BUILDING

DRAWN BY: RPM
REVIEWED BY: CLO
SCALE: As Noted
JOB NO.: 1403.00
DATE: July 25, 2016
DRAWING NUMBER: A11.01

Copyright © 2016 Ai3 Architects, LLC

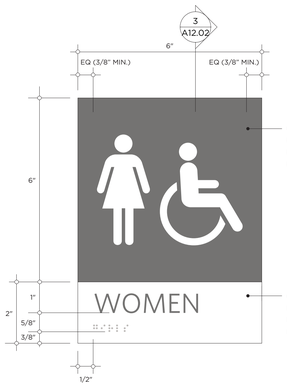

1 SIGN TYPE A1: ROOM ID WITH PICTOGRAM (SINGLE LINE)

HALF SCALE

Description: 5/16" Thick Acrylic Wall Plaque with polymer-process tactile lettering and Braille Type 2.

Background Color (Icon Panel): All exposed surfaces to be painted Color A, Raised Iconography to be painted Color D

Background Color (Description Panel): All exposed surfaces (including raised Braille) to be painted Color C, Raised surface of tactile text to be painted Color D. **There is to be no visible seam between Symbol Face Panel and Backer Panel.**

Graphics Font: Whitney Book, 5/8" Cap. Height

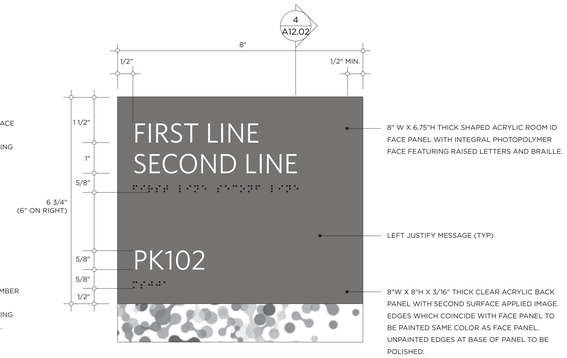

2 SIGN TYPE A2: ROOM ID WITH PAINTED RAISED MESSAGE

HALF SCALE

Description: 5/16" Thick Acrylic Wall Plaque with integral polymer-process tactile lettering and Braille Type 2.

Background Color (Room ID Face Panel): All exposed surfaces (including raised Braille) to be painted Color A, Raised Letters to be painted Color D

Background Color (Back Panel): Panel edges which coincide with face panel to be painted Color A. **There is to be no visible seam between Face Panel and Backer Panel.**

Graphics Font: Whitney, Book, 5/8" Cap. Height

3 SIGN TYPE A3: ROOM ID WITH PAINTED RAISED MESSAGE

HALF SCALE

Description: 5/16" Thick Acrylic Wall Plaque with integral polymer-process tactile lettering and Braille Type 2.

Background Color (Room ID Face Panel): All exposed surfaces (including raised Braille) to be painted Color A, Raised Letters to be painted Color D

Background Color (Back Panel): Panel edges which coincide with face panel to be painted Color A. **There is to be no visible seam between Face Panel and Backer Panel.**

Graphics Font: Room Name: Whitney, Book, 5/8" Cap. Height,
Assisted Listening Text: Whitney, Book, .4" Cap. Height,

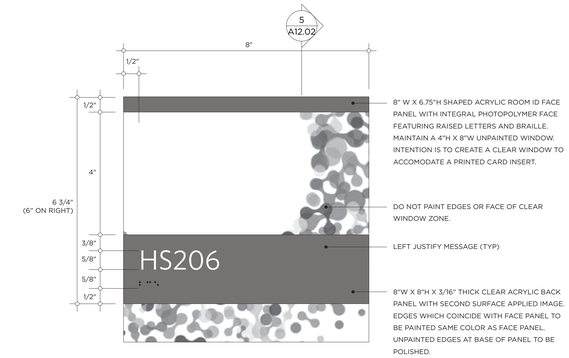

4 SIGN TYPE A4: ROOM ID WITH PAINTED RAISED MESSAGE

HALF SCALE

Description: 3/8" Thick Acrylic Wall Plaque with integral polymer-process tactile lettering and Braille Type 2.

Background Color (Room ID Face Panel): All exposed surfaces (including raised Braille) **EXCEPT CLEAR WINDOW ZONE** to be painted Color A, Raised Letters to be painted Color D

Background Color (Back Panel): Panel edges which coincide with face panel to be painted Color A. **There is to be no visible seam between Face Panel and Backer Panel.**

Graphics Font: Whitney, Book, 5/8" Cap. Height

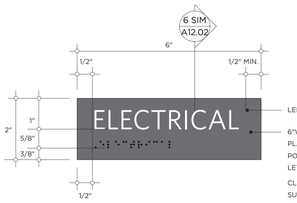

5 SIGN TYPE A5: ROOM ID WITH FIXED NAME

HALF SCALE

Description: 1/4" Thick Acrylic Wall Plaque with integral polymer-process tactile lettering and Braille Type 2.

Background Color (Room Number Panel): All exposed surfaces (including raised Braille) to be painted Color A, Raised surface of tactile room number text to be painted Color D

Graphics Font: Whitney, Book, 5/8" Cap. Height

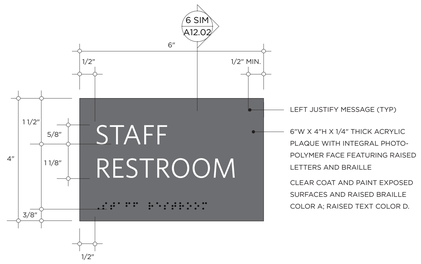

6 SIGN TYPE A6: ROOM ID WITH FIXED NAME

HALF SCALE

Description: 1/4" Thick Acrylic Wall Plaque with integral polymer-process tactile lettering and Braille Type 2.

Background Color (Room Number Panel): All exposed surfaces (including raised Braille) to be painted Color A, Raised surface of tactile room number text to be painted Color D

Graphics Font: Whitney, Book, 5/8" Cap. Height

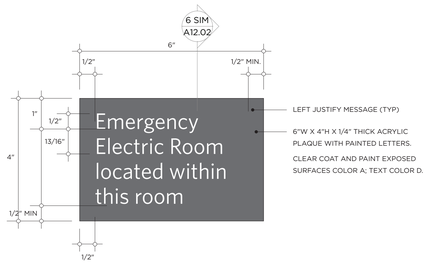

7 SIGN TYPE A9: SUPPLEMENTAL ID SIGN

HALF SCALE

Description: 1/4" Thick Acrylic Wall Plaque with silk-screened lettering.

Background Color (Room ID Panel): All exposed surfaces to be painted Color A, Visual text to be painted Color D

Graphics Font: Whitney, Book, 1/2" Cap. Height, upper and lower case.

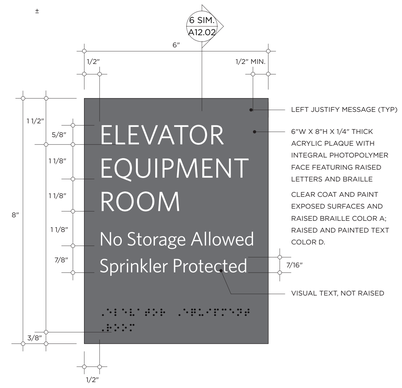

8 SIGN TYPE A7: ROOM ID WITH FIXED NAME

HALF SCALE

Description: 1/4" Thick Acrylic Wall Plaque with integral polymer-process tactile lettering and Braille Type 2.

Background Color (Room Number Panel): All exposed surfaces (including raised Braille) to be painted Color A, Raised surface of tactile text and visual to be painted Color D

Graphics Font: Whitney, Book

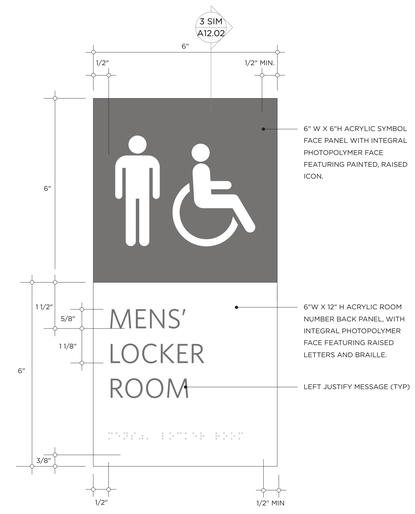

9 SIGN TYPE A8: ROOM ID WITH PICTOGRAM (MULTIPLE LINE)

HALF SCALE

Description: 5/16" Thick Acrylic Wall Plaque with polymer-process tactile lettering and Braille Type 2.

Background Color (Symbol Panel): All exposed surfaces to be painted Color A, Raised Iconography to be painted Color D. Extend edge paint to edges of Back Panel.

Background Color (Description Panel): All exposed surfaces (including raised Braille) to be painted Color C, Raised surface of tactile text to be painted Color D. **There is to be no visible seam between Symbol Face Panel and Backer Panel.**

Graphics Font: Whitney Book, 5/8" Cap. Height

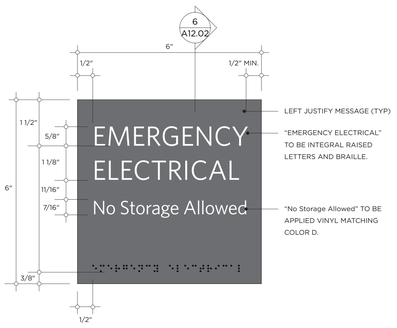

10 SIGN TYPE A10: ROOM ID WITH FIXED & SUPPLEMENTAL MESSAGING

HALF SCALE

Description: 1/4" Thick Acrylic Wall Plaque with integral polymer-process tactile lettering and Braille Type 2.

Background Color (Room Number Panel): All exposed surfaces (including raised Braille) to be painted Color A, Raised surface of tactile room number text to be painted Color D, Secondary text to be applied vinyl matching Color D.

Graphics Font: Whitney, Book, 5/8" Cap. Height and 7/16" Cap. Height.

11 SIGN TYPE A11: ROOM ID WITH FIXED NAME

HALF SCALE

Description: 1/4" Thick Acrylic Wall Plaque with applied vinyl lettering.

Background Color (Room Number Panel): All exposed surfaces to be painted Color A, applied vinyl lettering to be contrasting Color D

Graphics Font: Whitney, Book, 3/4" Cap. Height (U&LC)

12 SIGN TYPE A12: ROOM ID WITH FIXED NAME

HALF SCALE

Description: 1/4" Thick Acrylic Wall Plaque.

Background Color (Room Number Panel): All exposed surfaces to be painted Color A. Applied vinyl lettering to be contrasting Color D.

Graphics Font: Whitney, Book, 3/4" Cap. Height

ALTERNATE ICONOGRAPHY FOR SIGN TYPES A1 & A8

A1: WOMENS' ROOM | A2: MENS' ROOM | A3: RESTROOM | A1a: ACCESSIBLE WOMENS' ROOM | A2a: ACCESSIBLE MENS' ROOM | A3a: ACCESSIBLE RESTROOM

ADDITIONAL ICONOGRAPHY

ACCESSIBLE | STAIR | ASSISTED LISTENING | SHOWER | NO SMOKING | STREET LEVEL STAR | ELEVATOR

ARROWS FOR SIGN TYPE D1-D3

FOLD EDGE

ARROWS (FOLD EDGE TO ALIGN WITH SIGN EDGE)

SYMBOLS FOR SIGN TYPE V1

ai3 architects
526 Boston Post Rd Wayland, MA
508.358.0790 www.ai3architects.com

BEVERLY MIDDLE SCHOOL

CABOT STREET, BEVERLY, MA 01915

Copyright © 2016 Ai3 Architects LLC

KEYNOTE LEGEND: (REFERENCE SHEETS A0.01 & A0.02 FOR MASTER KEYNOTE LIST AND KEYNOTES NOT LISTED)

- These drawings are intended to illustrate design intent and should be used as a general reference guideline. All final engineering, fabrication, illumination requirements/restrictions and materials used are to be as specified and/or meet or exceed all required local and national codes.
- The quality of fit and finish on the final product must meet or exceed the requirements of these documents and subsequent approved shop drawings.
- Sample reviews by Owner and Ai3 Architects, LLC shall be conducted for sign types and details listed below in accompanying specifications.
- Colors shown are for reference only and are subject to the limitations of the printing process, and/or finish material specifications. Refer to referenced color systems contained within these drawings for actual color specification.
- Scaled examples shown are for reference only, and do not necessarily reflect actual site conditions. Detailed site surveys are required prior to fabrication and installation.
- All locations are approximate. All final locations are to be determined during pre-installation site walkthroughs, prior to sign fabrication and must be approved by the Owner.
- Messages shown in these drawings are for general reference only. Refer to each site's specific reference drawings/schedule for actual messages.
- Internal and/or external illumination, when used, will always be evenly distributed across the sign's face and fabricated in a way that prevents light leaks, hot spots, and dark spots. All illumination techniques used must comply with all applicable local illumination codes and requirements and are the responsibility of the Fabricator/Contractor.

COLORS

90% CONSTRUCTION DOCUMENTS

NOT FOR CONSTRUCTION

NORTH ARROW

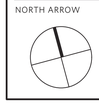

KEYPLAN

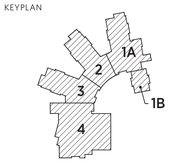

DRAWING NAME:

Sign Details and Elevations

DRAWN BY: WhyDesignWorks

REVIEWED BY:

SCALE: As Noted

JOB NO.: 1403.00

DATE: JUL 25, 2016

DRAWING NUMBER: A12.01

1 SIGN TYPE R1: NO SMOKING PLAQUE
HALF SCALE

Description: 5/16" Thick Acrylic Wall Plaque with painted text and graphics.

Background Color (Icon Panel): All exposed surfaces to be painted Color A, Cross out Stripe to be painted Matthews Paint Color "Fire Red" (MP24069 Fire Red.). Color of Cigarette to be "White".

Background Color (Message Panel): All exposed surfaces to be painted Color A, Text to be Color D

Graphics Font (Room Number): Whitney (Medium & Book), Upper and Lower case.

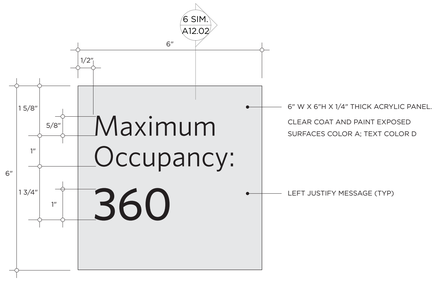

2 SIGN TYPE R2: MAX. OCCUPANCY PLAQUE
HALF SCALE

Description: 1/4" Thick Acrylic Wall Plaque with painted text.

Background Color: All exposed surfaces to be painted Matthews Paint, Color A

Text Color: Text is to be painted Matthews Paint, Color D.

Graphics Font (Room Number): Whitney (Book and Medium), Upper and Lower case.

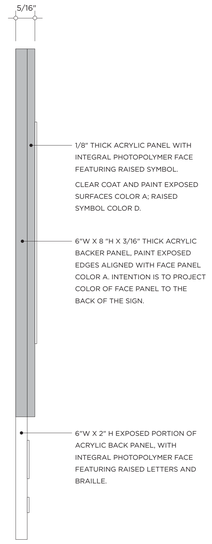

3 SIGN TYPE A1: SECTION
FULL SCALE

ACRYLIC COMPONENTS TO BE BONDED TOGETHER SECURELY. THERE SHOULD BE NO VISIBLE SEAMS BETWEEN ACRYLIC COMPONENTS SHARING SAME BACKGROUND COLOR

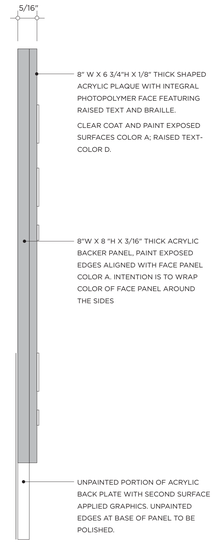

4 SIGN TYPE A2 & A3: SECTION
FULL SCALE

ACRYLIC COMPONENTS TO BE BONDED TOGETHER SECURELY. THERE SHOULD BE NO VISIBLE SEAMS BETWEEN ACRYLIC COMPONENTS SHARING SAME BACKGROUND COLOR

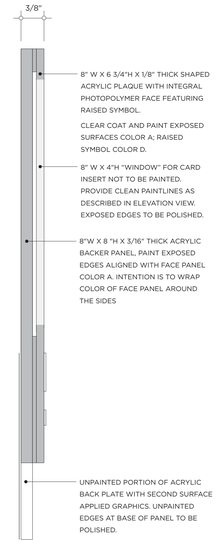

5 SIGN TYPE A4: SECTION
FULL SCALE

ACRYLIC COMPONENTS TO BE BONDED TOGETHER SECURELY. THERE SHOULD BE NO VISIBLE SEAMS BETWEEN ACRYLIC COMPONENTS SHARING SAME BACKGROUND COLOR

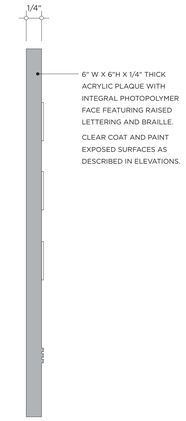

6 SIGN TYPE A10: SECTION
FULL SCALE

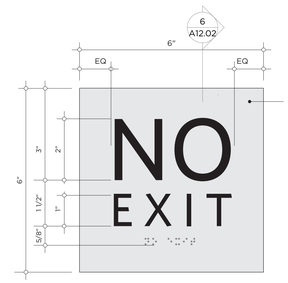

7 SIGN TYPE R3: NO EXIT DOOR ID PLAQUE
HALF SCALE

Description: 1/4" Thick Acrylic Wall Plaque with polymer-process tactile lettering and Braille Type 2.

Background Color: All exposed surfaces to be painted Matthews Paint Color "Fire Red" (MP24069 Fire Red.)

Text Color: Raised surface of tactile room number to be painted Matthews Paint Color "White Wonder" (MP32071), Braille to be background color.

Graphics Font (Room Number): Whitney (Medium), all upper case. "NO" is to have 2" Cap. Height; "EXIT" is to have 1" cap. height. Center message horizontally on plaque.

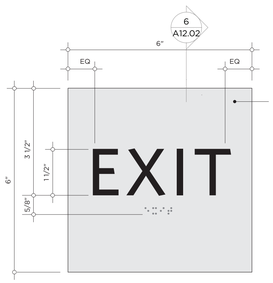

8 SIGN TYPE R4: EXIT DOOR ID PLAQUE
HALF SCALE

Description: 1/4" Thick Acrylic Wall Plaque with polymer-process tactile lettering and Braille Type 2.

Background Color: All exposed surfaces to be painted Matthews Paint Color "Ophios Green" (MP15184).

Text Color: Raised surface of tactile room number to be painted Matthews Paint Color "White Wonder" (MP32071), Braille to be background color.

Graphics Font (Room Number): Whitney (Medium), Upper Case.
"EXIT" is to have 1 1/2" Cap. Height. Center message horizontally on plaque.

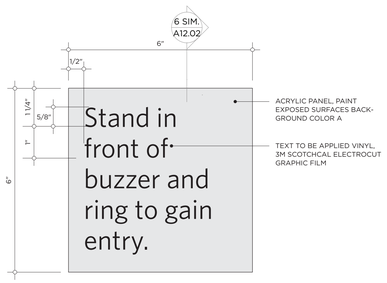

13 SIGN TYPE R7: BUZZER NOTICE AT ENTRANCE VESTIBULES
HALF SCALE

Description: 1/4" Thick Acrylic Wall Plaque with applied vinyl lettering.

Background Color (Room Number Panel): All exposed surfaces to be painted Color A, applied vinyl lettering to be contrasting Color D

Graphics Font: Whitney Book, 5/8" Cap. Height (U&LC)

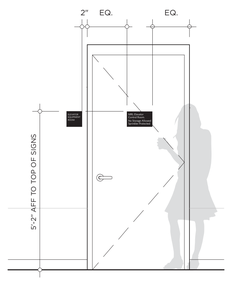

9 ELEVATION OF ROOM ID PLAQUES (A7, A8, A10; A11)
SCALE: 1/2"=1'-0"

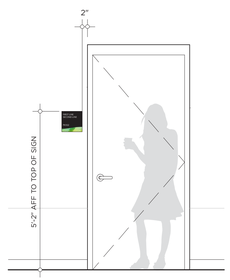

10 ELEVATION OF ROOM ID PLAQUES (A1-A4)
SCALE: 1/2"=1'-0"

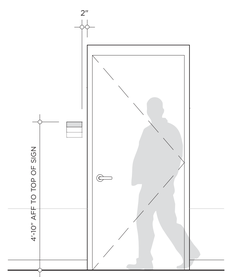

11 ELEVATION OF ROOM ID PLAQUES (A5, A6, A9)
SCALE: 1/2"=1'-0"

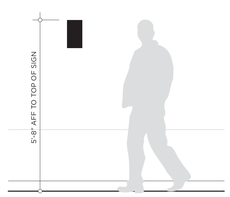

12 ELEVATION OF NO SMOKING PLAQUE: R1
SCALE: 1/2"=1'-0"

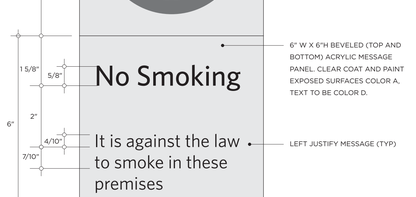

13 SIGN TYPE R5: EXTERIOR DOOR ID (TERTIARY)
SCALE: 3"=1'-0"

Description: 1/4" Thick Acrylic Plaque with painted text.

Background Color: All exposed surfaces to be painted Matthews Paint Color "Fire Red" (MP24069)

Text Color: Text to be painted Matthews Paint Color "White Wonder" (MP32071)

Graphics Font (Room Number): Whitney (Medium), all upper case. Message and type size to comply with all applicable codes.

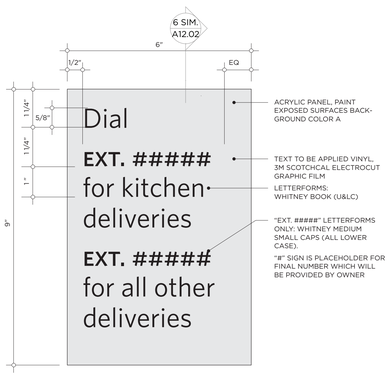

13 SIGN TYPE R6: NOTICE AT DELIVERY ENTRANCE
HALF SCALE

Description: 1/4" Thick Acrylic Wall Plaque with applied vinyl lettering.

Background Color (Room Number Panel): All exposed surfaces to be painted Color A, applied vinyl lettering to be contrasting Color D

Graphics Font: Whitney (as noted) 5/8" Cap. Height (U&LC)

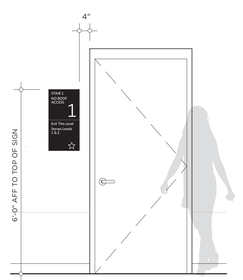

14 ELEVATION OF STAIRWELL LEVEL ID PLAQUE
SCALE: 1/2"=1'-0"

ai3 architects
526 Boston Post Rd Wayland, MA
508.358.0790 www.ai3architects.com

BEVERLY MIDDLE SCHOOL

CABOT STREET, BEVERLY, MA 01915

KEYNOTE LEGEND: (REFERENCE SHEETS A0.01 & A0.02 FOR MASTER KEYNOTE LIST AND KEYNOTES NOT LISTED)

- These drawings are intended to illustrate design intent and should be used as a general reference guideline. All final engineering, fabrication, illumination requirements/restrictions and materials used are to be as specified and/or meet or exceed all required local and national codes.
- The quality of fit and finish on the final product must meet or exceed the requirements of these documents and subsequent approved shop drawings.
- Sample reviews by Owner and Ai3 Architects, LLC shall be conducted for sign types and details listed below in accompanying specifications.
- Colors shown are for reference only and are subject to the limitations of the printing process, and/or finish material specifications. Refer to referenced color systems contained within these drawings for actual color specification.
- Scaled examples shown are for reference only, and do not necessarily reflect actual site conditions. Detailed site surveys are required prior to fabrication and installation.
- All locations are approximate. All final locations are to be determined during pre-installation site walkthroughs, prior to sign fabrication and must be approved by the Owner.
- Messages shown in these drawings are for general reference only. Refer to each site's specific reference drawings/schedule for actual messages.
- Internal and/or external illumination, when used, will always be evenly distributed across the sign's face and fabricated in a way that prevents light leaks, hot spots, and dark spots. All illumination techniques used must comply with all applicable local illumination codes and requirements and are the responsibility of the Fabricator/Contractor.

90% CONSTRUCTION DOCUMENTS

NOT FOR CONSTRUCTION

NORTH ARROW

KEYPLAN

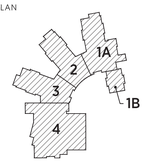

Copyright © 2016 - Ai3 Architects, LLC

DRAWING NAME:
Sign Details and Elevations

DRAWN BY: WhyDesignWorks
REVIEWED BY:
SCALE: As Noted
JOB NO.: 1403.00
DATE: JUL 25, 2016
DRAWING NUMBER: A12.02

1 SIGN TYPE B1: STAIR/LEVEL IDENTIFICATION PLAQUE

HALF SCALE

Description: 1'-0"W X 1'-9"H X 3/8" Thick Wall Plaque.

Background Color: All exposed surfaces to be painted Color A

Text Color: Raised surface of tactile text and Braille to be painted background color (as indicated); Visual text and star or arrow symbol is to be painted Color D

Graphics Font: Primary 5" high Level Number: Whitney (Book, Capital Numeral)
Visual text: Whitney (Book), upper and lower case, cap. height as indicated.
Raised letters: Whitney (Book), upper case, 5/8" cap. height, Braille Type 2

Finishing: The acrylic face and aluminum backer panel are to be bonded securely at all edges with 3M VHB tape. Perimeter edges are to align and the acrylic panels shall butt together cleanly, without gaps.

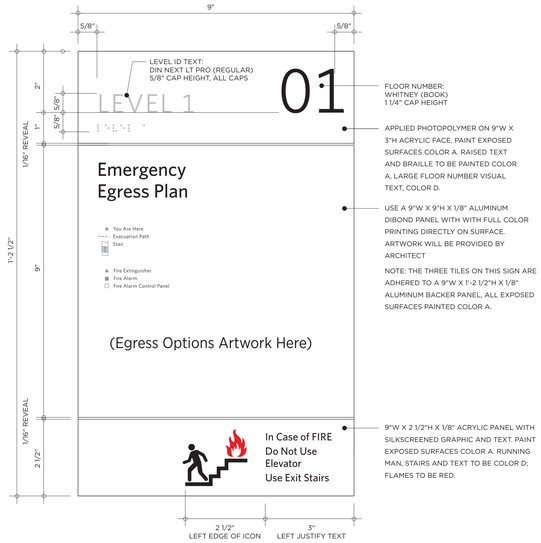

3 SIGN TYPE B2: ELEVATOR NOTICE

HALF SCALE

Description: 9"W X 1'-2-1/2"H X 1/4" Thick Wall Plaque. Backer Plate is to be painted aluminum (1/8" thick). The header tile and tile with running man and fire graphic are to be 1/8" painted acrylic. The map with key is to be printed on 1/8" thick aluminum Dibond.

Background Color: All exposed surfaces (except the Emergency Egress Plan panel) to be painted Color A

Text Color: Header Panel: tactile text and Braille to be color A, visual text, color D.
Map Panel: Map and graphics will be provided as digital file for output. Warning Panel: Text, Running Man and Stairs to be Color D, Flame symbol to be Matthews Paint Color "Fire Red" (MP24069 Fire Red.) (All paint to be Matthews Acrylic Polyurethane).

Graphics Font (Room Number): Whitney (Book), height as shown

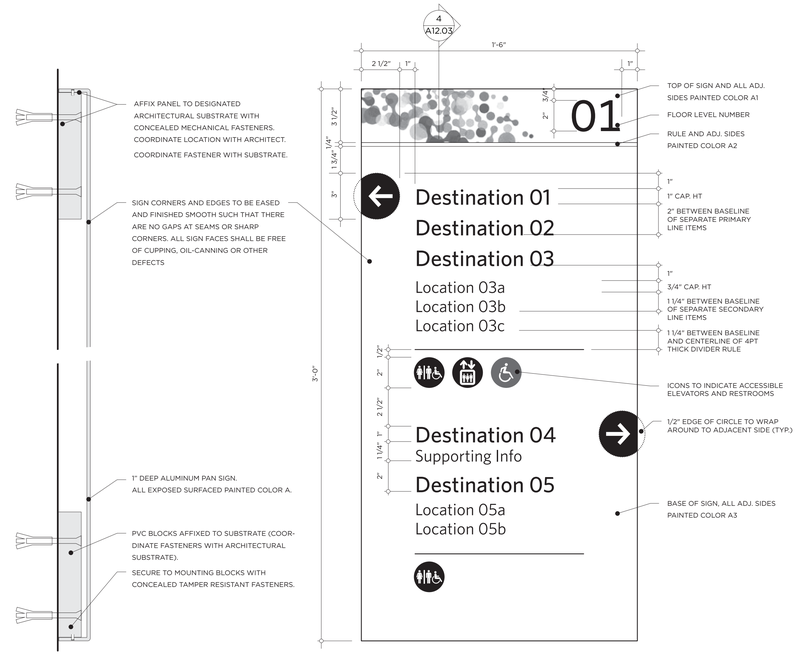

4 SIGN TYPE D1: SECTION

HALF SCALE

5 SIGN TYPE D1: DIRECTIONAL WALL PLAQUE

SCALE: 3"=1'-0"

Description:
1'-6"W X 3'-0"H X 1" Deep Pan Sign

Background Color: All exposed surfaces to be painted as indicated. There are three zones, the header, a dividing rule and the base of the panel. Paint all sides the adjacent designated color.

Graphics Font: Visual text: Primary Line Items: Whitney Medium (U&LC); Secondary Line Items: Whitney Book (U&LC), cap. height as indicated. Coordinate colors with Architect in shop drawing review process.

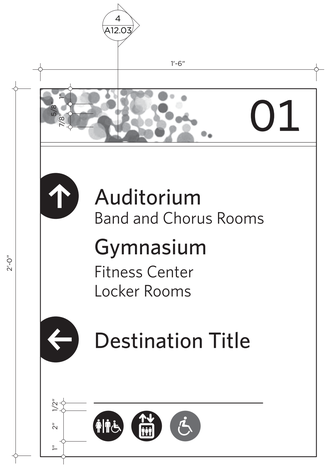

9 SIGN TYPE D2: DIRECTIONAL WALL PLAQUE

SCALE: 3"=1'-0"

Description:
1'-6"W X 2'-0"H X 1" Deep Pan Sign.

See 3/12.2 for Color, Graphic Fonts and Finishing information

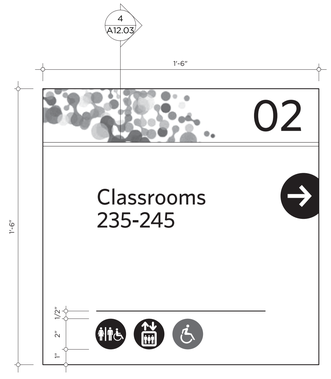

10 SIGN TYPE D3: DIRECTIONAL WALL PLAQUE

SCALE: 3"=1'-0"

Description:
1'-6"W X 1'-6"H X 1" Deep Pan Sign.

See 3/12.2 for Color, Graphic Fonts and Finishing information

6 SIGN TYPE E3: INTERIOR PRIMARY ID LETTERS

3"=1'-0"

Description: 3/4" deep cut aluminum letters. All letters shall have sharp inside and outside corners. Letterforms will be drilled and tapped in back for projected mount with studs and spacers.

Letter Finish: A fine grain satin face and sand blasted returns with a clear coat.

Graphics Font: Whitney (Semibold), 8" Cap. Height

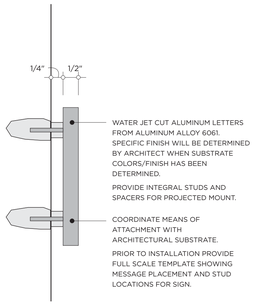

7 SIGN TYPE E4: MOUNTING DETAIL

6"=1'-0"

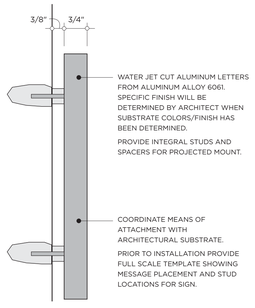

8 SIGN TYPE E2 & E3: MOUNTING DETAIL

6"=1'-0"

11 SIGN TYPE E4: INTERIOR SECONDARY ID LETTERS

3"=1'-0"

Description: 1/2" deep cut aluminum letters. All letters shall have sharp inside and outside corners. Letterforms will be drilled and tapped for concealed stud mount.

Letter Finish: A fine grain satin face and sand blasted returns with a clear coat.

Graphics Font: Whitney (Book, all Caps), 4 1/2" Cap. Height

12 SIGN TYPE E2: MAIN OFFICE ID LETTERS

3"=1'-0"

Description: 3/4" deep cut aluminum letters. All letters shall have sharp inside and outside corners. Letterforms will be drilled and tapped in back for projected mount with studs and spacers.

Letter Finish: A fine grain satin face and sand blasted returns with a clear coat.

Graphics Font: Whitney Book (U&LC); Whitney Semibold (Small Caps) for "BEVERLY"

13 SIGN TYPE F7: EXTERIOR DOOR ID NUMBERS

HALF SCALE

Description: 3" applied vinyl numerals to be located at all exterior doors. Apply only one set per entrance.

Letter Color: Architect to determine color.

Graphics Font: Whitney Condensed, Medium, (Capital Numbers)

Ai3 architects
526 Boston Post Rd Wayland, MA
508.358.0790 www.ai3architects.com

BEVERLY MIDDLE SCHOOL

CABOT STREET, BEVERLY, MA 01915

Copyright © 2016 Ai3 Architects LLC

KEYNOTE LEGEND: (REFERENCE SHEETS A0.01 & A0.02 FOR MASTER KEYNOTE LIST AND KEYNOTES NOT LISTED)

- These drawings are intended to illustrate design intent and should be used as a general reference guideline. All final engineering, fabrication, illumination requirements/restrictions and materials used are to be as specified and/or meet or exceed all required local and national codes.
- The quality of fit and finish on the final product must meet or exceed the requirements of these documents and subsequent approved shop drawings.
- Sample reviews by Owner and Ai3 Architects, LLC shall be conducted for sign types and details listed below in accompanying specifications.
- Colors shown are for reference only and are subject to the limitations of the printing process, and/or finish material specifications. Refer to referenced color systems contained within these drawings for actual color specification.
- Scaled examples shown are for reference only, and do not necessarily reflect actual site conditions. Detailed site surveys are required prior to fabrication and installation.
- All locations are approximate. All final locations are to be determined during pre-installation site walkthroughs, prior to sign fabrication and must be approved by the Owner.
- Messages shown in these drawings are for general reference only. Refer to each site's specific reference drawings/schedule for actual messages.
- Internal and/or external illumination, when used, will always be evenly distributed across the sign's face and fabricated in a way that prevents light leaks, hot spots, and dark spots. All illumination techniques used must comply with all applicable local illumination codes and requirements and are the responsibility of the Fabricator/Contractor.

90% CONSTRUCTION DOCUMENTS

NOT FOR CONSTRUCTION

NORTH ARROW

KEYPLAN

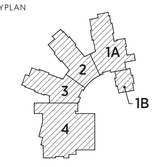

DRAWING NAME:
Sign Details and Elevations

DRAWN BY: WhyDesignWorks

REVIEWED BY:

SCALE: As Noted
JOB NO.: 1403.00
DATE: JUL 25, 2016

DRAWING NUMBER: A12.03

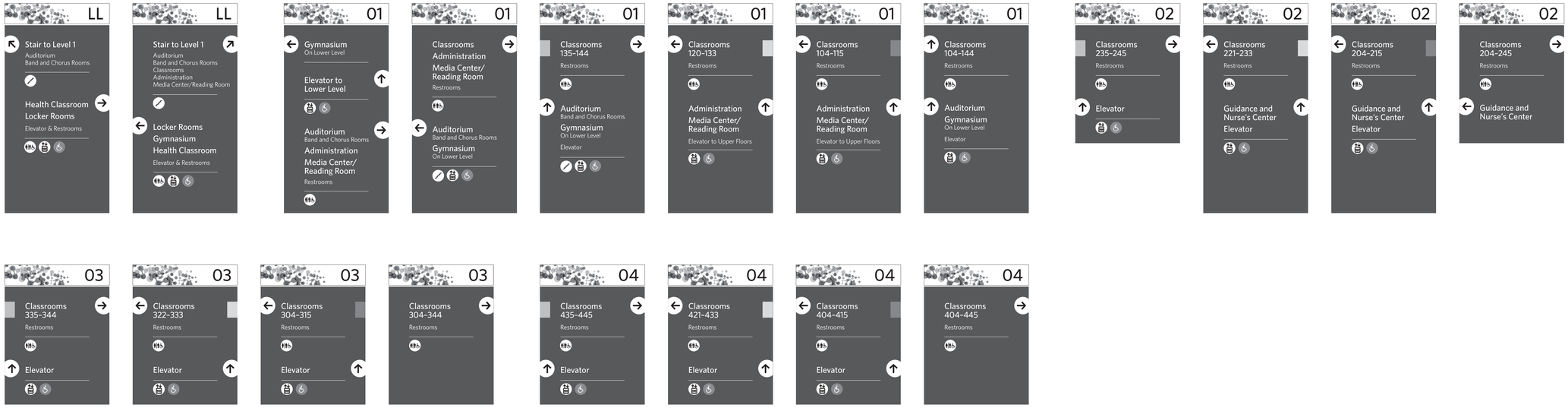

1 SIGN TYPE D: ELEVATION OF DIRECTIONAL PLAQUES
SCALE: 1 1/2"=1'-0"

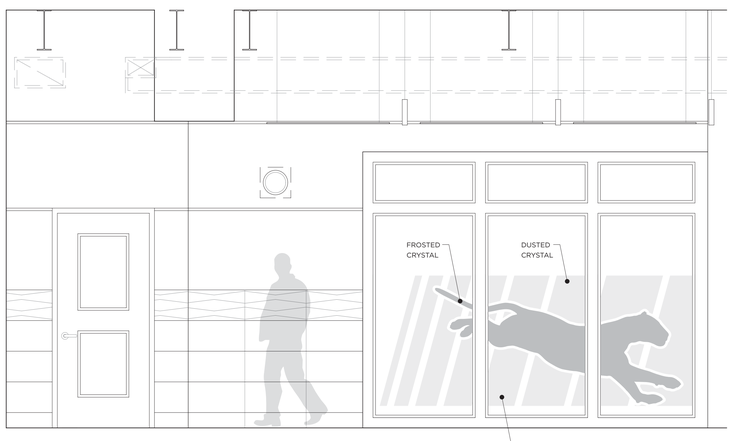

2 SIGN TYPE F2: VINYL APPLIQUE TO HEALTH CLASSROOM GLAZED PARTITIONS
SCALE: 1/2"=1'-0"

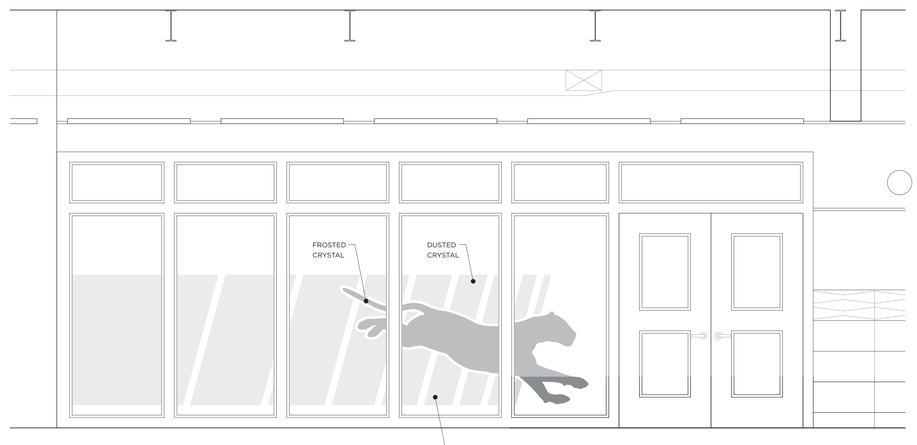

3 SIGN TYPE F2: VINYL APPLIQUE TO HEALTH CLASSROOM GLAZED PARTITIONS
SCALE: 1/2"=1'-0"

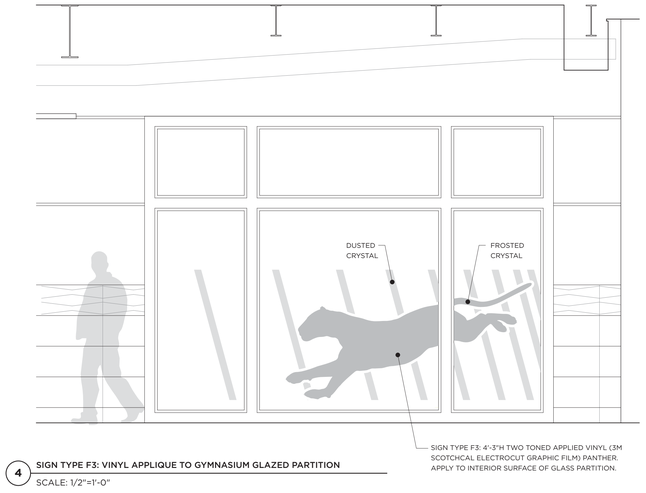

4 SIGN TYPE F3: VINYL APPLIQUE TO GYMNASIUM GLAZED PARTITION
SCALE: 1/2"=1'-0"

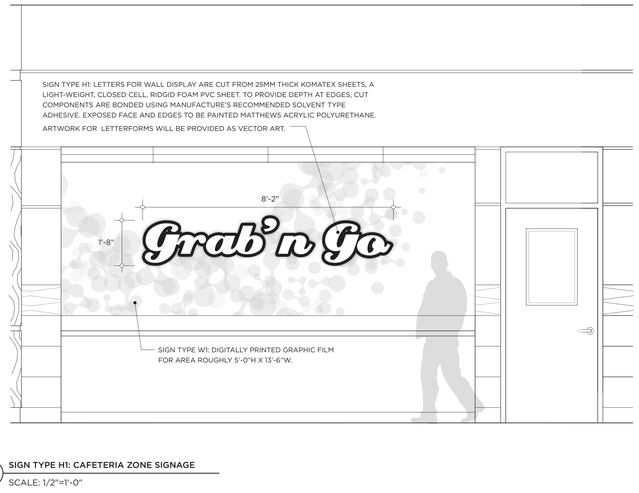

5 SIGN TYPE H1: CAFETERIA ZONE SIGNAGE
SCALE: 1/2"=1'-0"

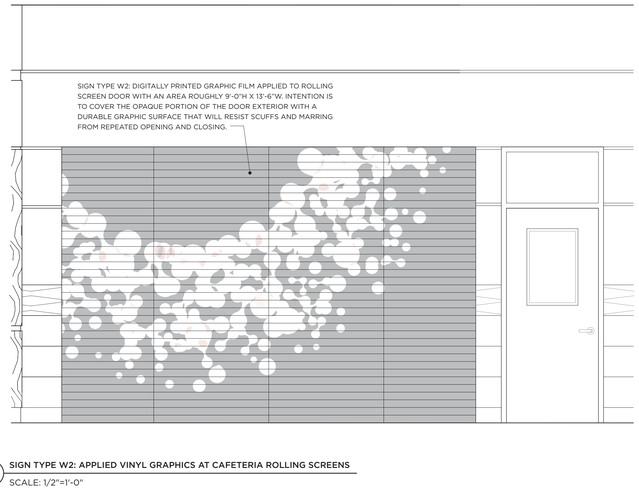

6 SIGN TYPE W2: APPLIED VINYL GRAPHICS AT CAFETERIA ROLLING SCREENS
SCALE: 1/2"=1'-0"

ai3 architects
526 Boston Post Rd Wayland, MA
508.358.0790 www.ai3architects.com

BEVERLY MIDDLE SCHOOL

CABOT STREET, BEVERLY, MA 01915

Copyright © 2016 - Ai3 Architects, LLC

KEYNOTE LEGEND: (REFERENCE SHEETS A0.01 & A0.02 FOR MASTER KEYNOTE LIST AND KEYNOTES NOT LISTED)

- These drawings are intended to illustrate design intent and should be used as a general reference guideline. All final engineering, fabrication, illumination requirements/restrictions and materials used are to be as specified and/or meet or exceed all required local and national codes.
- The quality of fit and finish on the final product must meet or exceed the requirements of these documents and subsequent approved shop drawings.
- Sample reviews by Owner and Ai3 Architects, LLC shall be conducted for sign types and details listed below in accompanying specifications.
- Colors shown are for reference only and are subject to the limitations of the printing process, and/or finish material specifications. Refer to referenced color systems contained within these drawings for actual color specification.
- Scaled examples shown are for reference only, and do not necessarily reflect actual site conditions. Detailed site surveys are required prior to fabrication and installation.
- All locations are approximate. All final locations are to be determined during pre-installation site walkthroughs, prior to sign fabrication and must be approved by the Owner.
- Messages shown in these drawings are for general reference only. Refer to each site's specific reference drawings/schedule for actual messages.
- Internal and/or external illumination, when used, will always be evenly distributed across the sign's face and fabricated in a way that prevents light leaks, hot spots, and dark spots. All illumination techniques used must comply with all applicable local illumination codes and requirements and are the responsibility of the Fabricator/Contractor.

90% CONSTRUCTION DOCUMENTS

NOT FOR CONSTRUCTION

NORTH ARROW

KEYPLAN

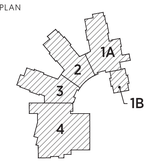

DRAWING NAME:
Sign Details and Elevations

DRAWN BY: WhyDesignWorks
REVIEWED BY:
SCALE: As Noted
JOB NO.: 1403.00
DATE: JUL 25, 2016
DRAWING NUMBER: A12.04

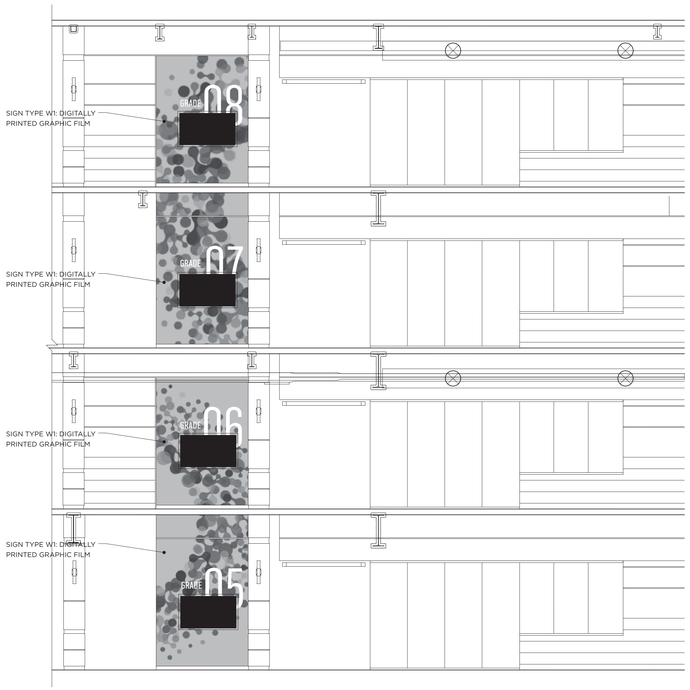

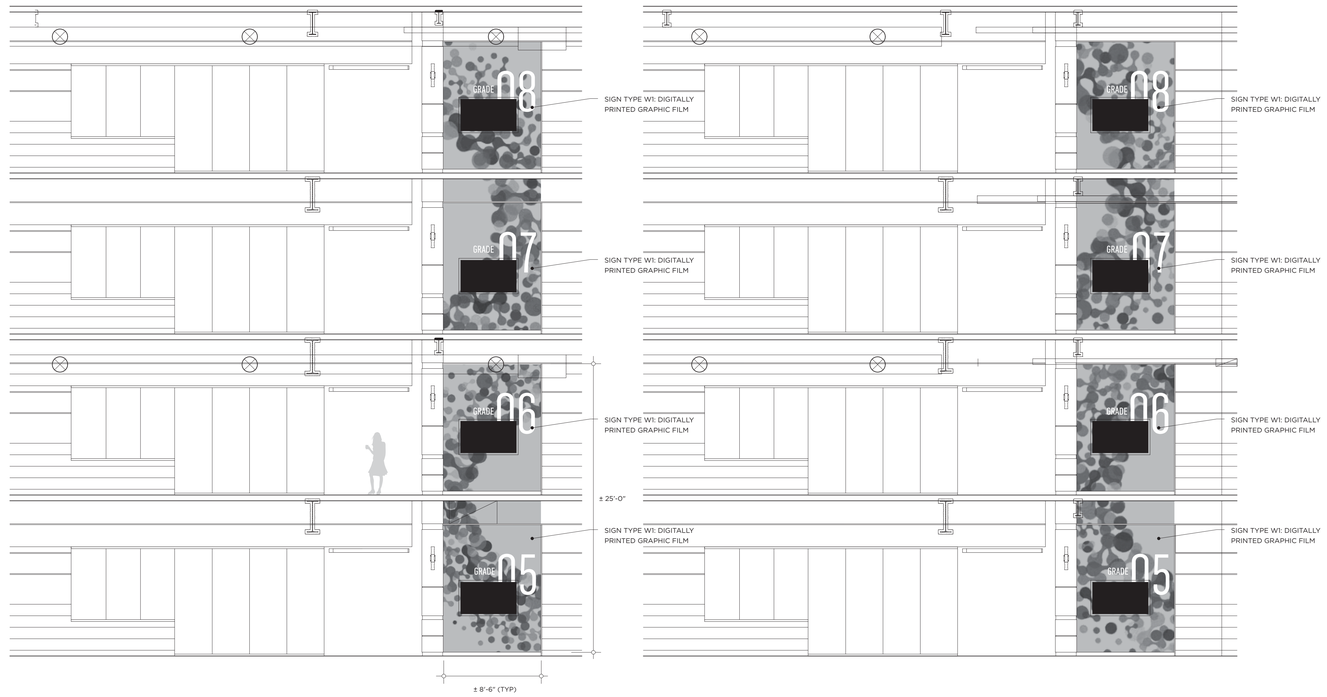

1 SIGN TYPE W1: INTERIOR ELEVATION OF MAKER SPACE AND NEIGHBORHOOD ENTRY
SCALE: 3/16"=1'-0"

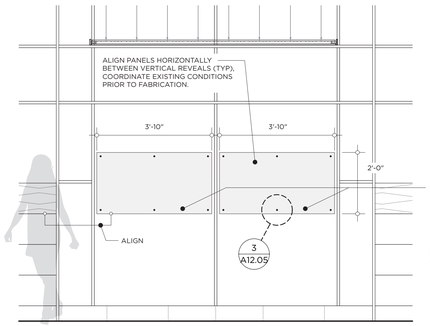

2 ACRYLIC PANELS AT SMALL INCLUSION VESTIBULES
SCALE: 1/2"=1'-0"

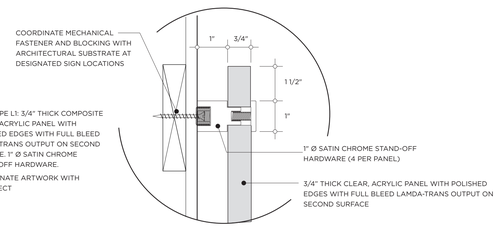

3 STANDOFF WALL MOUNT CONNECTION AT SIGN TYPE L1
HALF SCALE

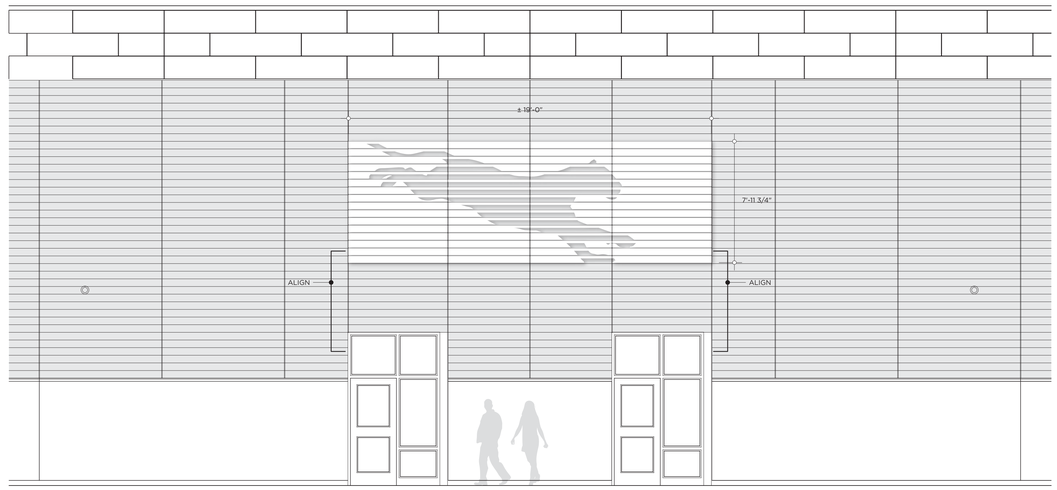

4 ELEVATION OF EXTERIOR GYMNASIUM SPECIALTY SIGN
SCALE: 1/4"=1'-0"

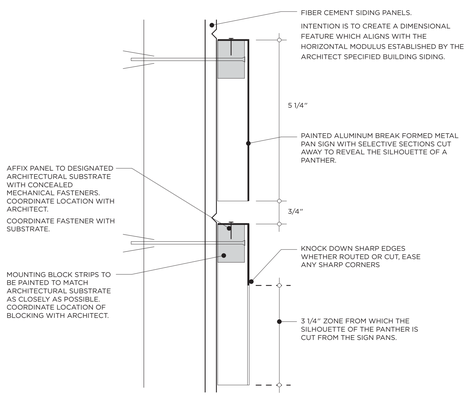

5 STANDOFF WALL MOUNT CONNECTION AT SIGN TYPE L1
HALF SCALE

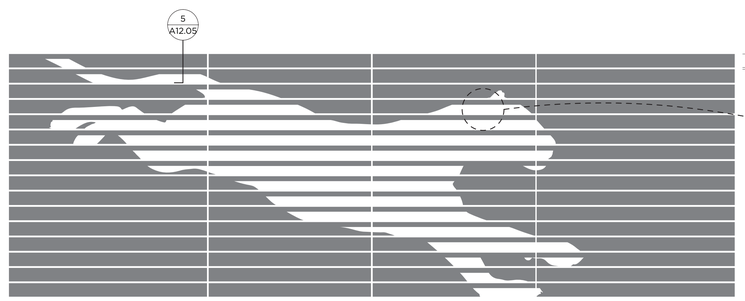

6 ELEVATION OF EXTERIOR GYMNASIUM SPECIALTY SIGN
SCALE: 1/2"=1'-0"

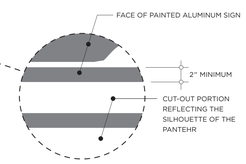

7 ELEVATION DETAIL AT CUT
SCALE: 1 1/2"=1'-0"

ai3 architects
526 Boston Post Rd Wayland, MA
508.358.0790 www.ai3architects.com

BEVERLY MIDDLE SCHOOL

CABOT STREET, BEVERLY, MA 01915

KEYNOTE LEGEND: (REFERENCE SHEETS A0.01 & A0.02 FOR MASTER KEYNOTE LIST AND KEYNOTES NOT LISTED)

- These drawings are intended to illustrate design intent and should be used as a general reference guideline. All final engineering, fabrication, illumination requirements/restrictions and materials used are to be as specified and/or meet or exceed all required local and national codes.
- The quality of fit and finish on the final product must meet or exceed the requirements of these documents and subsequent approved shop drawings.
- Sample reviews by Owner and Ai3 Architects, LLC shall be conducted for sign types and details listed below in accompanying specifications.
- Colors shown are for reference only and are subject to the limitations of the printing process, and/or finish material specifications. Refer to referenced color systems contained within these drawings for actual color specification.
- Scaled examples shown are for reference only, and do not necessarily reflect actual site conditions. Detailed site surveys are required prior to fabrication and installation.
- All locations are approximate. All final locations are to be determined during pre-installation site walkthroughs, prior to sign fabrication and must be approved by the Owner.
- Messages shown in these drawings are for general reference only. Refer to each site's specific reference drawings/schedule for actual messages.
- Internal and/or external illumination, when used, will always be evenly distributed across the sign's face and fabricated in a way that prevents light leaks, hot spots, and dark spots. All illumination techniques used must comply with all applicable local illumination codes and requirements and are the responsibility of the Fabricator/Contractor.

Copyright © 2016 - Ai3 Architects, LLC

90% CONSTRUCTION DOCUMENTS

NOT FOR CONSTRUCTION

NORTH ARROW

KEYPLAN

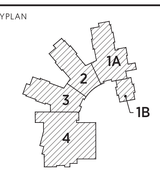

DRAWING NAME:
Sign Details and Elevations

DRAWN BY: WhyDesignWorks
REVIEWED BY:
SCALE: As Noted
JOB NO.: 1403.00
DATE: JUL 25, 2016
DRAWING NUMBER: **A12.05**

1 ELEVATION OF SIGN TYPE M1: ENTRANCE VESTIBULE
1/2"=1'-0"

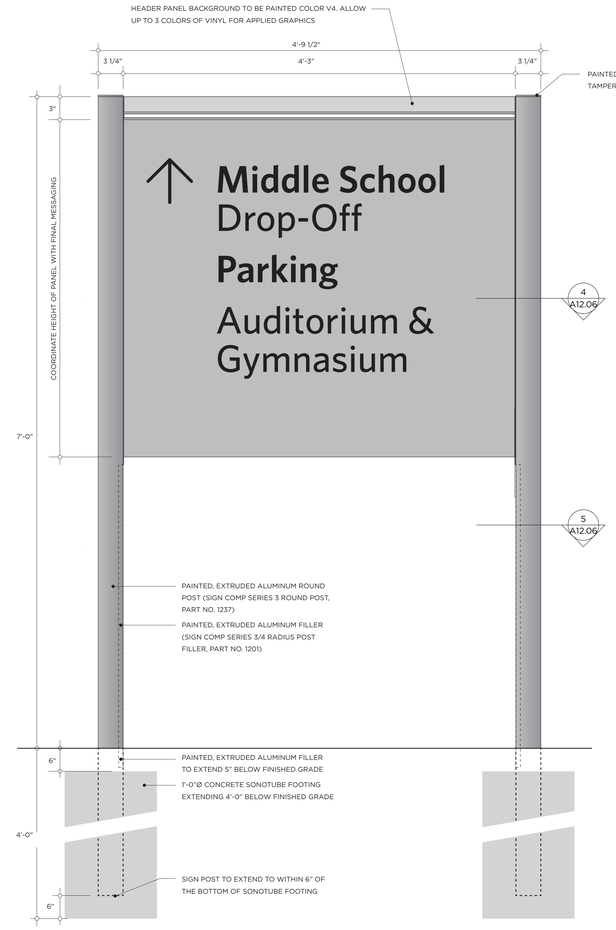

3 DETAIL ELEVATION OF SIGN TYPE V1: EXTERIOR VEHICULAR POST AND PANEL
1 1/2"=1'-0"

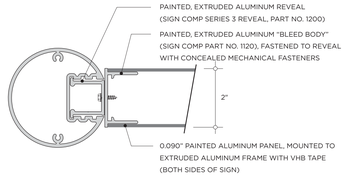

4 SECTION AT POST THROUGH SIGN PANEL
HALF SCALE

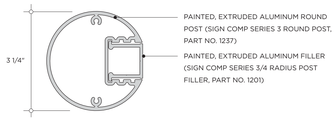

5 SECTION AT POST BELOW SIGN PANEL
HALF SCALE

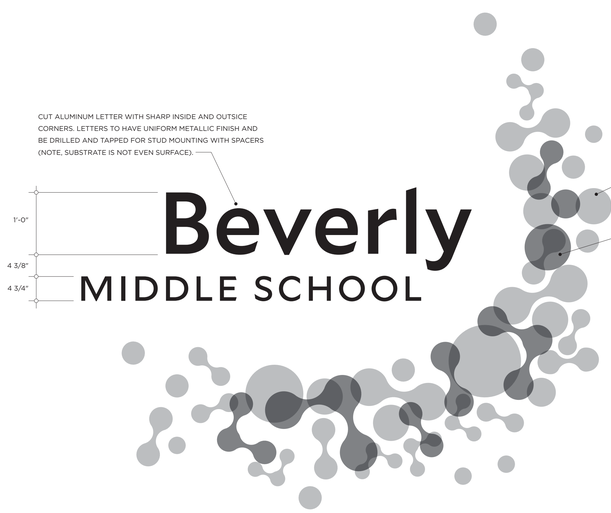

2 DETAIL ELEVATION OF SIGN TYPE M1
1"=1'-0"

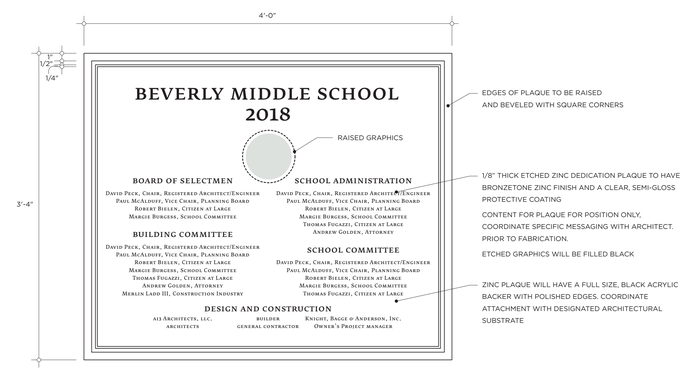

6 SIGN TYPE X1: DEDICATION PLAQUE
SCALE: 1 1/2"=1'-0"

ai3 architects
526 Boston Post Rd
Wayland, MA
508.358.0790
www.ai3architects.com

BEVERLY MIDDLE SCHOOL

CABOT STREET, BEVERLY, MA 01915

Copyright © 2016 ai3 Architects LLC

KEYNOTE LEGEND: (REFERENCE SHEETS A0.01 & A0.02 FOR MASTER KEYNOTE LIST AND KEYNOTES NOT LISTED)

- These drawings are intended to illustrate design intent and should be used as a general reference guideline. All final engineering, fabrication, illumination requirements/restrictions and materials used are to be as specified and/or meet or exceed all required local and national codes.
- The quality of fit and finish on the final product must meet or exceed the requirements of these documents and subsequent approved shop drawings.
- Sample reviews by Owner and Ai3 Architects, LLC shall be conducted for sign types and details listed below in accompanying specifications.
- Colors shown are for reference only and are subject to the limitations of the printing process, and/or finish material specifications. Refer to referenced color systems contained within these drawings for actual color specification.
- Scaled examples shown are for reference only, and do not necessarily reflect actual site conditions. Detailed site surveys are required prior to fabrication and installation.
- All locations are approximate. All final locations are to be determined during pre-installation site walkthroughs, prior to sign fabrication and must be approved by the Owner.
- Messages shown in these drawings are for general reference only. Refer to each site's specific reference drawings/schedule for actual messages.
- Internal and/or external illumination, when used, will always be evenly distributed across the sign's face and fabricated in a way that prevents light leaks, hot spots, and dark spots. All illumination techniques used must comply with all applicable local illumination codes and requirements and are the responsibility of the Fabricator/Contractor.

90% CONSTRUCTION DOCUMENTS

NOT FOR CONSTRUCTION

NORTH ARROW

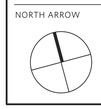

KEYPLAN

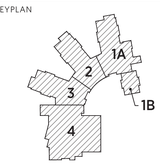

DRAWING NAME:
Sign Details and Elevations

DRAWN BY: WhyDesignWorks
REVIEWED BY:
SCALE: As Noted
JOB NO.: 1403.00
DATE: JUL 25, 2016
DRAWING NUMBER: A12.06

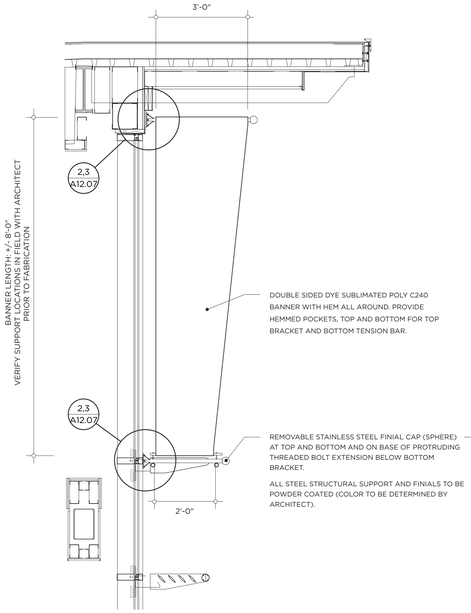

1 SIGN TYPE J1: EXTERIOR 2-SIDED BANNER ELEVATION

1/2"=1'-0"

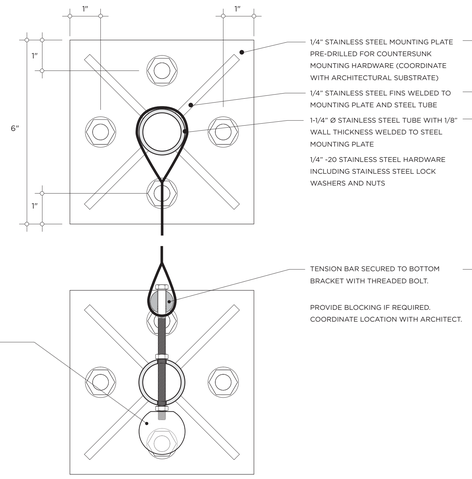

2 SIGN TYPE J1: BRACKET DETAILS

HALF SCALE

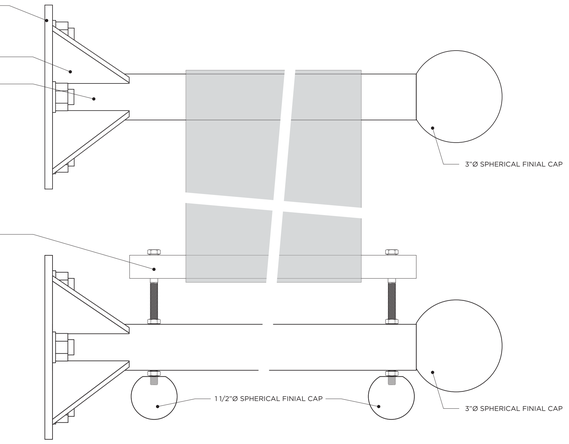

3 SIGN TYPE J1: BRACKET DETAILS

HALF SCALE

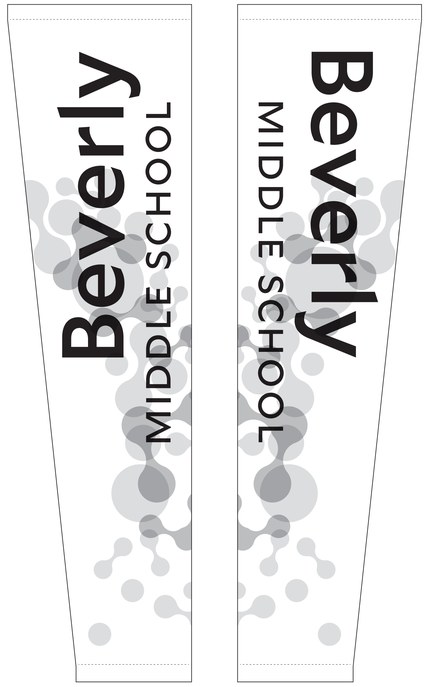

4 SIGN TYPE J1: BANNER ELEVATIONS

1"=1'-0"

ai3 architects

526 Boston Post Rd
508.358.0790

Wayland, MA
www.ai3architects.com

BEVERLY MIDDLE SCHOOL

CABOT STREET, BEVERLY, MA 01915

Copyright © 2016 - Ai3 Architects, LLC

KEYNOTE LEGEND: (REFERENCE SHEETS A0.01 & A0.02 FOR MASTER KEYNOTE LIST AND KEYNOTES NOT LISTED)

- These drawings are intended to illustrate design intent and should be used as a general reference guideline. All final engineering, fabrication, illumination requirements/restrictions and materials used are to be as specified and/or meet or exceed all required local and national codes.
- The quality of fit and finish on the final product must meet or exceed the requirements of these documents and subsequent approved shop drawings.
- Sample reviews by Owner and Ai3 Architects, LLC shall be conducted for sign types and details listed below in accompanying specifications.
- Colors shown are for reference only and are subject to the limitations of the printing process, and/or finish material specifications. Refer to referenced color systems contained within these drawings for actual color specification.
- Scaled examples shown are for reference only, and do not necessarily reflect actual site conditions. Detailed site surveys are required prior to fabrication and installation.
- All locations are approximate. All final locations are to be determined during pre-installation site walkthroughs, prior to sign fabrication and must be approved by the Owner.
- Messages shown in these drawings are for general reference only. Refer to each site's specific reference drawings/schedule for actual messages.
- Internal and/or external illumination, when used, will always be evenly distributed across the sign's face and fabricated in a way that prevents light leaks, hot spots, and dark spots. All illumination techniques used must comply with all applicable local illumination codes and requirements and are the responsibility of the Fabricator/Contractor.

90% CONSTRUCTION DOCUMENTS

NOT FOR CONSTRUCTION

NORTH ARROW

KEYPLAN

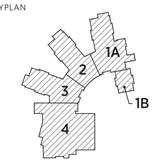

DRAWING NAME:

Sign Details and Elevations

DRAWN BY: WhyDesignWorks

REVIEWED BY:

SCALE: As Noted

JOB NO.: 1403.00

DATE: JUL 25, 2016

DRAWING NUMBER:

A12.07

1 LOWER FLOOR SIGN LOCATION PLAN: ZONE A

NOT TO SCALE

Ai3 architects

526 Boston Post Rd
508.358.0790

Wayland, MA
www.ai3architects.com

BEVERLY MIDDLE SCHOOL

CABOT STREET, BEVERLY, MA 01915

Copyright © 2016 - Ai3 Architects, LLC

KEYNOTE LEGEND: (REFERENCE SHEETS A0.01 & A0.02 FOR MASTER KEYNOTE LIST AND KEYNOTES NOT LISTED)

- These drawings are intended to illustrate design intent and should be used as a general reference guideline. All final engineering, fabrication, illumination requirements/restrictions and materials used are to be as specified and/or meet or exceed all required local and national codes.
- The quality of fit and finish on the final product must meet or exceed the requirements of these documents and subsequent approved shop drawings.
- Sample reviews by Owner and Ai3 Architects, LLC shall be conducted for sign types and details listed below in accompanying specifications.
- Colors shown are for reference only and are subject to the limitations of the printing process, and/or finish material specifications. Refer to referenced color systems contained within these drawings for actual color specification.
- Scaled examples shown are for reference only, and do not necessarily reflect actual site conditions. Detailed site surveys are required prior to fabrication and installation.
- All locations are approximate. All final locations are to be determined during pre-installation site walkthroughs, prior to sign fabrication and must be approved by the Owner.
- Messages shown in these drawings are for general reference only. Refer to each site's specific reference drawings/schedule for actual messages.
- Internal and/or external illumination, when used, will always be evenly distributed across the sign's face and fabricated in a way that prevents light leaks, hot spots, and dark spots. All illumination techniques used must comply with all applicable local illumination codes and requirements and are the responsibility of the Fabricator/Contractor.

90% CONSTRUCTION DOCUMENTS

NOT FOR CONSTRUCTION

NORTH ARROW

KEYPLAN

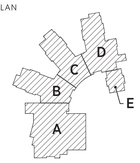

DRAWING NAME:

Sign Location Plan

Lower Floor: Zone A

DRAWN BY: WhyDesignWorks

REVIEWED BY:

SCALE: As Noted

JOB NO.: 1403.00

DATE: JUL. 25, 2016

DRAWING NUMBER: **A12.08**

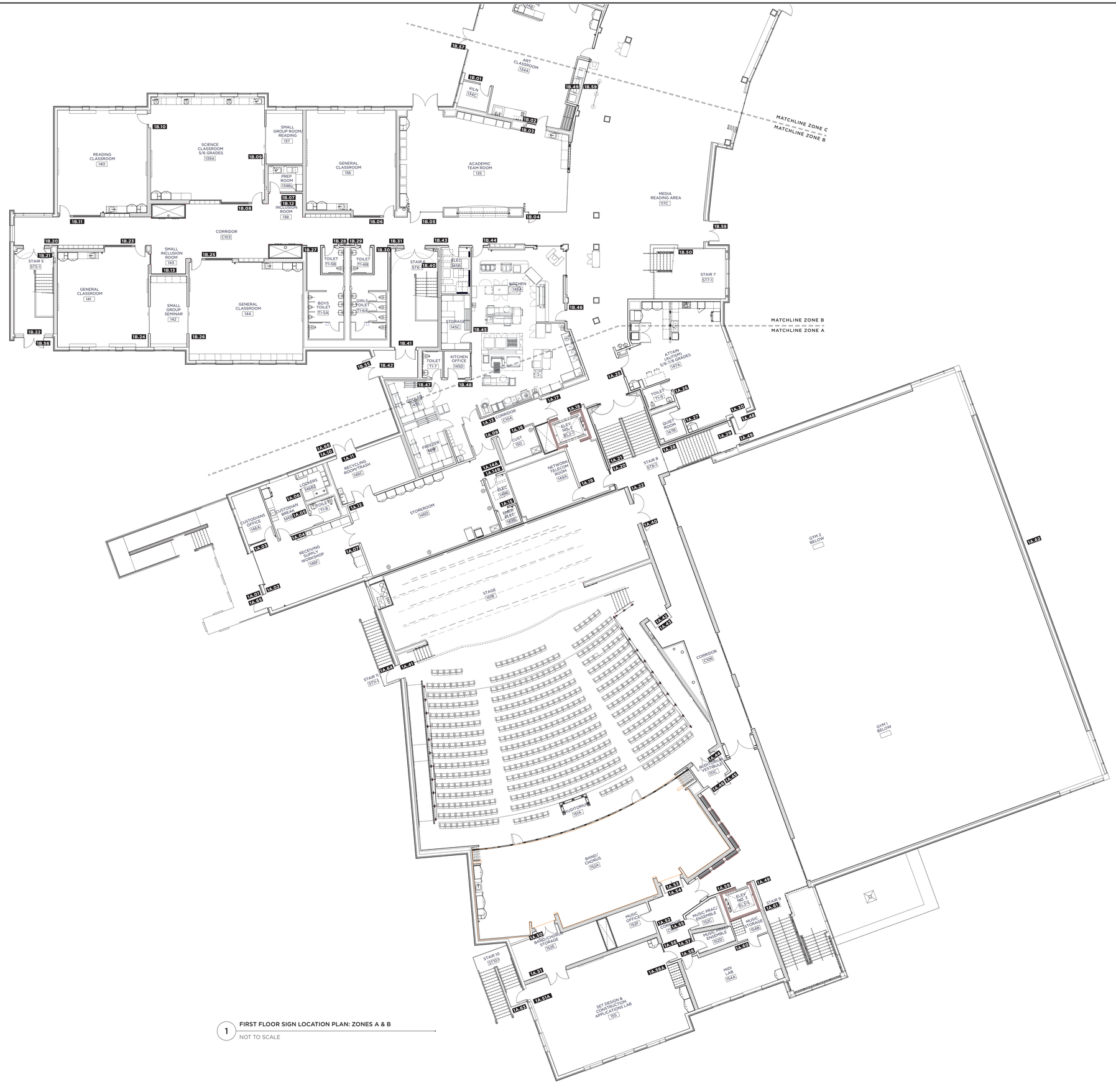

1 FIRST FLOOR SIGN LOCATION PLAN: ZONES A & B

NOT TO SCALE

ai3 architects

526 Boston Post Rd
508.358.0790

Wayland, MA
www.ai3architects.com

BEVERLY MIDDLE SCHOOL

CABOT STREET, BEVERLY, MA 01915

Copyright © 2016 - Ai3 Architects, LLC

KEYNOTE LEGEND: (REFERENCE SHEETS A0.01 & A0.02 FOR MASTER KEYNOTE LIST AND KEYNOTES NOT LISTED)

- These drawings are intended to illustrate design intent and should be used as a general reference guideline. All final engineering, fabrication, illumination requirements/restrictions and materials used are to be as specified and/or meet or exceed all required local and national codes.
- The quality of fit and finish on the final product must meet or exceed the requirements of these documents and subsequent approved shop drawings.
- Sample reviews by Owner and Ai3 Architects, LLC shall be conducted for sign types and details listed below in accompanying specifications.
- Colors shown are for reference only and are subject to the limitations of the printing process, and/or finish material specifications. Refer to referenced color systems contained within these drawings for actual color specification.
- Scaled examples shown are for reference only, and do not necessarily reflect actual site conditions. Detailed site surveys are required prior to fabrication and installation.
- All locations are approximate. All final locations are to be determined during pre-installation site walkthroughs, prior to sign fabrication and must be approved by the Owner.
- Messages shown in these drawings are for general reference only. Refer to each site's specific reference drawings/schedule for actual messages.
- Internal and/or external illumination, when used, will always be evenly distributed across the sign's face and fabricated in a way that prevents light leaks, hot spots, and dark spots. All illumination techniques used must comply with all applicable local illumination codes and requirements and are the responsibility of the Fabricator/Contractor.

90% CONSTRUCTION DOCUMENTS

NOT FOR CONSTRUCTION

NORTH ARROW

KEYPLAN

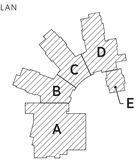

DRAWING NAME:

Sign Location Plan

First Floor: Zones A-B

DRAWN BY: WhyDesignWorks

REVIEWED BY:

SCALE: As Noted

JOB NO.: 1403.00

DATE: JUL. 25, 2016

DRAWING NUMBER: **A12.09**

1 FIRST FLOOR SIGN LOCATION PLAN: ZONES C, D, E

NOT TO SCALE

ai3 architects

526 Boston Post Rd Wayland, MA
508.358.0790 www.ai3architects.com

BEVERLY MIDDLE SCHOOL

CABOT STREET, BEVERLY, MA 01915

Copyright © 2016 Ai3 Architects, LLC

KEYNOTE LEGEND: (REFERENCE SHEETS A0.01 & A0.02 FOR MASTER KEYNOTE LIST AND KEYNOTES NOT LISTED)

- These drawings are intended to illustrate design intent and should be used as a general reference guideline. All final engineering, fabrication, illumination requirements/restrictions and materials used are to be as specified and/or meet or exceed all required local and national codes.
- The quality of fit and finish on the final product must meet or exceed the requirements of these documents and subsequent approved shop drawings.
- Sample reviews by Owner and Ai3 Architects, LLC shall be conducted for sign types and details listed below in accompanying specifications.
- Colors shown are for reference only and are subject to the limitations of the printing process, and/or finish material specifications. Refer to referenced color systems contained within these drawings for actual color specification.
- Scaled examples shown are for reference only, and do not necessarily reflect actual site conditions. Detailed site surveys are required prior to fabrication and installation.
- All locations are approximate. All final locations are to be determined during pre-installation site walkthroughs, prior to sign fabrication and must be approved by the Owner.
- Messages shown in these drawings are for general reference only. Refer to each site's specific reference drawings/schedule for actual messages.
- Internal and/or external illumination, when used, will always be evenly distributed across the sign's face and fabricated in a way that prevents light leaks, hot spots, and dark spots. All illumination techniques used must comply with all applicable local illumination codes and requirements and are the responsibility of the Fabricator/Contractor.

90% CONSTRUCTION DOCUMENTS

NOT FOR CONSTRUCTION

NORTH ARROW

KEYPLAN

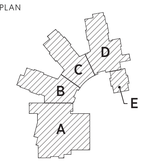

DRAWING NAME:

Sign Location Plan

First Floor: Zones C-E

DRAWN BY: WhyDesignWorks

REVIEWED BY:

SCALE: As Noted

JOB NO.: 1403.00

DATE: JUL. 25, 2016

DRAWING NUMBER: **A12.10**

1 SECOND FLOOR SIGN LOCATION PLAN: ZONES A & B

NOT TO SCALE

Ai3 architects

526 Boston Post Rd Wayland, MA
508.358.0790 www.ai3architects.com

BEVERLY MIDDLE SCHOOL

CABOT STREET, BEVERLY, MA 01915

Copyright © 2016 Ai3 Architects LLC

KEYNOTE LEGEND: (REFERENCE SHEETS A0.01 & A0.02 FOR MASTER KEYNOTE LIST AND KEYNOTES NOT LISTED)

- These drawings are intended to illustrate design intent and should be used as a general reference guideline. All final engineering, fabrication, illumination requirements/restrictions and materials used are to be as specified and/or meet or exceed all required local and national codes.
- The quality of fit and finish on the final product must meet or exceed the requirements of these documents and subsequent approved shop drawings.
- Sample reviews by Owner and Ai3 Architects, LLC shall be conducted for sign types and details listed below in accompanying specifications.
- Colors shown are for reference only and are subject to the limitations of the printing process, and/or finish material specifications. Refer to referenced color systems contained within these drawings for actual color specification.
- Scaled examples shown are for reference only, and do not necessarily reflect actual site conditions. Detailed site surveys are required prior to fabrication and installation.
- All locations are approximate. All final locations are to be determined during pre-installation site walkthroughs, prior to sign fabrication and must be approved by the Owner.
- Messages shown in these drawings are for general reference only. Refer to each site's specific reference drawings/schedule for actual messages.
- Internal and/or external illumination, when used, will always be evenly distributed across the sign's face and fabricated in a way that prevents light leaks, hot spots, and dark spots. All illumination techniques used must comply with all applicable local illumination codes and requirements and are the responsibility of the Fabricator/Contractor.

90% CONSTRUCTION DOCUMENTS

NOT FOR CONSTRUCTION

NORTH ARROW

KEYPLAN

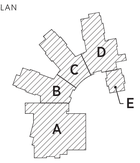

DRAWING NAME:

Sign Location Plan

Second Floor: Zones A-B

DRAWN BY: WhyDesignWorks

REVIEWED BY:

SCALE: As Noted

JOB NO.: 1403.00

DATE: JUL. 25, 2016

DRAWING NUMBER: **A12.11**

1 SECOND FLOOR SIGN LOCATION PLAN: ZONES C, D, E

NOT TO SCALE

ai3 architects

526 Boston Post Rd Wayland, MA
508.358.0790 www.ai3architects.com

BEVERLY MIDDLE SCHOOL

CABOT STREET, BEVERLY, MA 01915

Copyright © 2016 - Ai3 Architects, LLC

KEYNOTE LEGEND: (REFERENCE SHEETS A0.01 & A0.02 FOR MASTER KEYNOTE LIST AND KEYNOTES NOT LISTED)

- These drawings are intended to illustrate design intent and should be used as a general reference guideline. All final engineering, fabrication, illumination requirements/restrictions and materials used are to be as specified and/or meet or exceed all required local and national codes.
- The quality of fit and finish on the final product must meet or exceed the requirements of these documents and subsequent approved shop drawings.
- Sample reviews by Owner and Ai3 Architects, LLC shall be conducted for sign types and details listed below in accompanying specifications.
- Colors shown are for reference only and are subject to the limitations of the printing process, and/or finish material specifications. Refer to referenced color systems contained within these drawings for actual color specification.
- Scaled examples shown are for reference only, and do not necessarily reflect actual site conditions. Detailed site surveys are required prior to fabrication and installation.
- All locations are approximate. All final locations are to be determined during pre-installation site walkthroughs, prior to sign fabrication and must be approved by the Owner.
- Messages shown in these drawings are for general reference only. Refer to each site's specific reference drawings/schedule for actual messages.
- Internal and/or external illumination, when used, will always be evenly distributed across the sign's face and fabricated in a way that prevents light leaks, hot spots, and dark spots. All illumination techniques used must comply with all applicable local illumination codes and requirements and are the responsibility of the Fabricator/Contractor.

90% CONSTRUCTION DOCUMENTS

NOT FOR CONSTRUCTION

NORTH ARROW

KEYPLAN

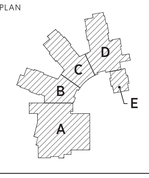

DRAWING NAME:

Sign Location Plan

Second Floor: Zones C-E

DRAWN BY: WhyDesignWorks

REVIEWED BY:

SCALE: As Noted

JOB NO.: 1403.00

DATE: JUL. 25, 2016

DRAWING NUMBER: **A12.12**

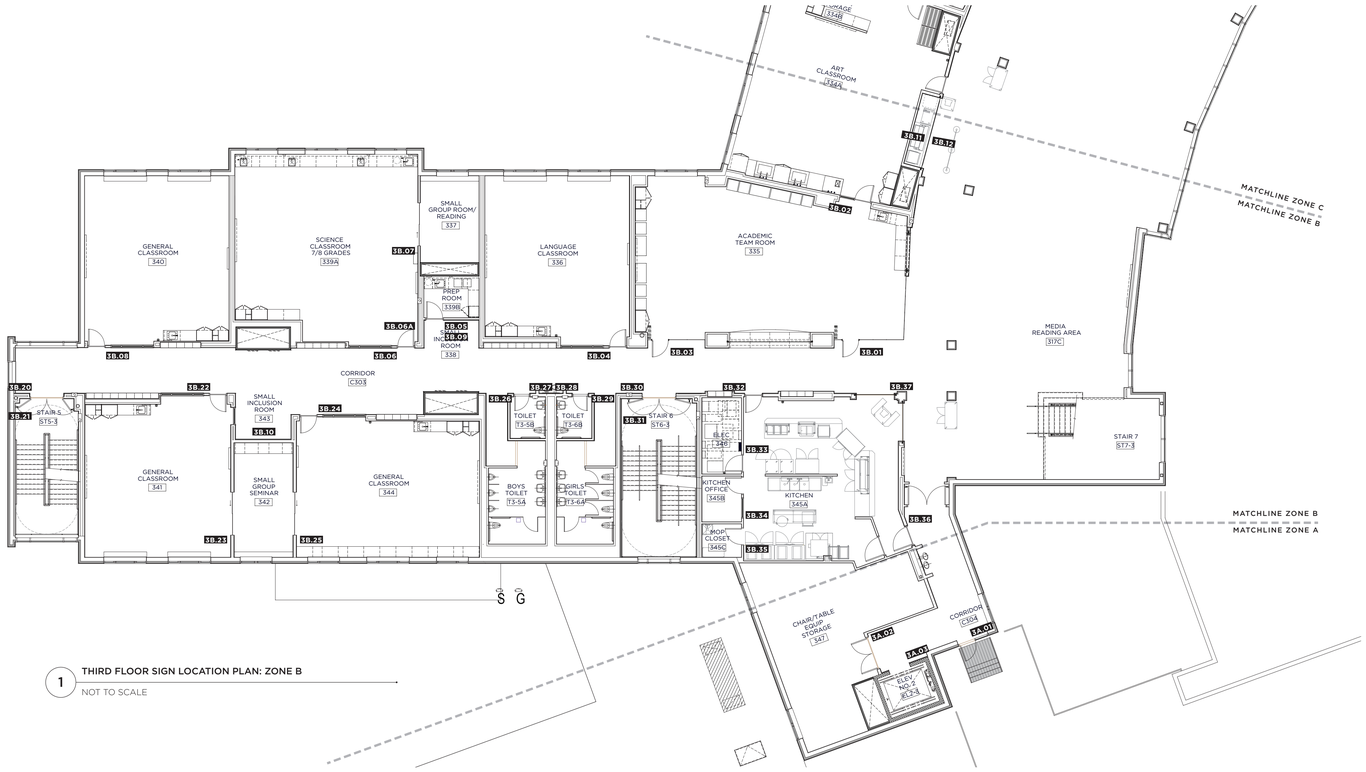

1 THIRD FLOOR SIGN LOCATION PLAN: ZONE B

NOT TO SCALE

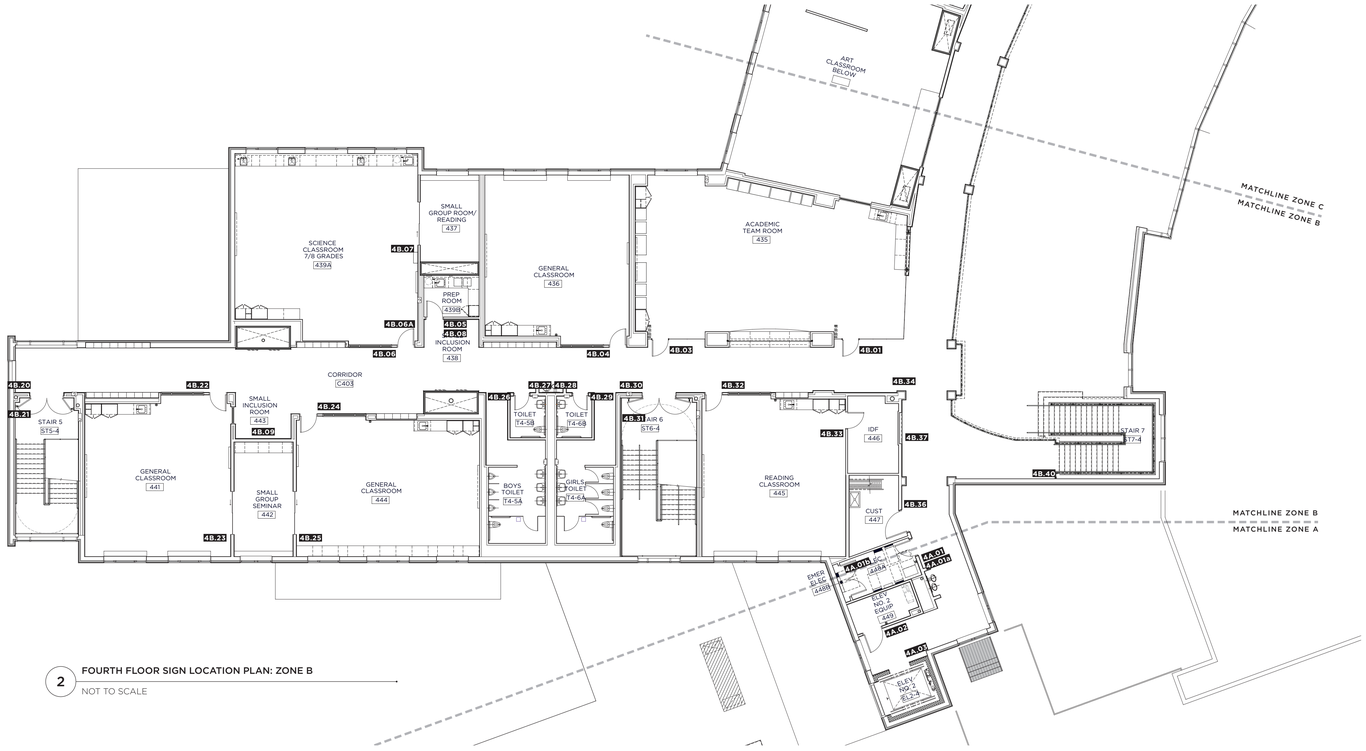

2 FOURTH FLOOR SIGN LOCATION PLAN: ZONE B

NOT TO SCALE

ai3 architects

526 Boston Post Rd Wayland, MA
508.358.0790 www.ai3architects.com

BEVERLY MIDDLE SCHOOL

CABOT STREET, BEVERLY, MA 01915

Copyright © 2016 - Ai3 Architects, LLC

KEYNOTE LEGEND: (REFERENCE SHEETS A0.01 & A0.02 FOR MASTER KEYNOTE LIST AND KEYNOTES NOT LISTED)

- These drawings are intended to illustrate design intent and should be used as a general reference guideline. All final engineering, fabrication, illumination requirements/restrictions and materials used are to be as specified and/or meet or exceed all required local and national codes.
- The quality of fit and finish on the final product must meet or exceed the requirements of these documents and subsequent approved shop drawings.
- Sample reviews by Owner and Ai3 Architects, LLC shall be conducted for sign types and details listed below in accompanying specifications.
- Colors shown are for reference only and are subject to the limitations of the printing process, and/or finish material specifications. Refer to referenced color systems contained within these drawings for actual color specification.
- Scaled examples shown are for reference only, and do not necessarily reflect actual site conditions. Detailed site surveys are required prior to fabrication and installation.
- All locations are approximate. All final locations are to be determined during pre-installation site walkthroughs, prior to sign fabrication and must be approved by the Owner.
- Messages shown in these drawings are for general reference only. Refer to each site's specific reference drawings/schedule for actual messages.
- Internal and/or external illumination, when used, will always be evenly distributed across the sign's face and fabricated in a way that prevents light leaks, hot spots, and dark spots. All illumination techniques used must comply with all applicable local illumination codes and requirements and are the responsibility of the Fabricator/Contractor.

90% CONSTRUCTION DOCUMENTS

NOT FOR CONSTRUCTION

NORTH ARROW

KEYPLAN

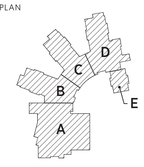

DRAWING NAME:

Sign Location Plan
Third and Fourth Floor:
Zone B

DRAWN BY: **WhyDesignWorks**

REVIEWED BY:

SCALE: **As Noted**
JOB NO.: **1403.00**
DATE: **JUL. 25, 2016**

DRAWING NUMBER: **A12.13**

1 THIRD FLOOR SIGN LOCATION PLAN: ZONES C & D

NOT TO SCALE

ai3 architects

526 Boston Post Rd Wayland, MA
508.358.0790 www.ai3architects.com

BEVERLY MIDDLE SCHOOL

CABOT STREET, BEVERLY, MA 01915

Copyright © 2016 - Ai3 Architects, LLC

KEYNOTE LEGEND: (REFERENCE SHEETS A0.09 & A0.02 FOR MASTER KEYNOTE LIST AND KEYNOTES NOT LISTED)

- These drawings are intended to illustrate design intent and should be used as a general reference guideline. All final engineering, fabrication, illumination requirements/restrictions and materials used are to be as specified and/or meet or exceed all required local and national codes.
- The quality of fit and finish on the final product must meet or exceed the requirements of these documents and subsequent approved shop drawings.
- Sample reviews by Owner and Ai3 Architects, LLC shall be conducted for sign types and details listed below in accompanying specifications.
- Colors shown are for reference only and are subject to the limitations of the printing process, and/or finish material specifications. Refer to referenced color systems contained within these drawings for actual color specification.
- Scaled examples shown are for reference only, and do not necessarily reflect actual site conditions. Detailed site surveys are required prior to fabrication and installation.
- All locations are approximate. All final locations are to be determined during pre-installation site walkthroughs, prior to sign fabrication and must be approved by the Owner.
- Messages shown in these drawings are for general reference only. Refer to each site's specific reference drawings/schedule for actual messages.
- Internal and/or external illumination, when used, will always be evenly distributed across the sign's face and fabricated in a way that prevents light leaks, hot spots, and dark spots. All illumination techniques used must comply with all applicable local illumination codes and requirements and are the responsibility of the Fabricator/Contractor.

90% CONSTRUCTION DOCUMENTS

NOT FOR CONSTRUCTION

NORTH ARROW

KEYPLAN

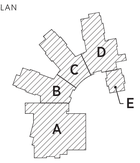

DRAWING NAME:

Sign Location Plan

Third Floor: Zones C-D

DRAWN BY: WhyDesignWorks

REVIEWED BY:

SCALE: As Noted

JOB NO.: 1403.00

DATE: JUL. 25, 2016

DRAWING NUMBER: **A12.14**

1 FOURTH FLOOR SIGN LOCATION PLAN: ZONES C & D

NOT TO SCALE

ai3 architects

526 Boston Post Rd Wayland, MA
508.358.0790 www.ai3architects.com

BEVERLY MIDDLE SCHOOL

CABOT STREET, BEVERLY, MA 01915

Copyright © 2016 - Ai3 Architects, LLC

KEYNOTE LEGEND: (REFERENCE SHEETS A0.01 & A0.02 FOR MASTER KEYNOTE LIST AND KEYNOTES NOT LISTED)

- These drawings are intended to illustrate design intent and should be used as a general reference guideline. All final engineering, fabrication, illumination requirements/restrictions and materials used are to be as specified and/or meet or exceed all required local and national codes.
- The quality of fit and finish on the final product must meet or exceed the requirements of these documents and subsequent approved shop drawings.
- Sample reviews by Owner and Ai3 Architects, LLC shall be conducted for sign types and details listed below in accompanying specifications.
- Colors shown are for reference only and are subject to the limitations of the printing process, and/or finish material specifications. Refer to referenced color systems contained within these drawings for actual color specification.
- Scaled examples shown are for reference only, and do not necessarily reflect actual site conditions. Detailed site surveys are required prior to fabrication and installation.
- All locations are approximate. All final locations are to be determined during pre-installation site walkthroughs, prior to sign fabrication and must be approved by the Owner.
- Messages shown in these drawings are for general reference only. Refer to each site's specific reference drawings/schedule for actual messages.
- Internal and/or external illumination, when used, will always be evenly distributed across the sign's face and fabricated in a way that prevents light leaks, hot spots, and dark spots. All illumination techniques used must comply with all applicable local illumination codes and requirements and are the responsibility of the Fabricator/Contractor.

90% CONSTRUCTION DOCUMENTS

NOT FOR CONSTRUCTION

NORTH ARROW

KEYPLAN

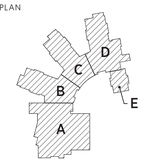

DRAWING NAME:

Sign Location Plan

Fourth Floor: Zones C-D

DRAWN BY: WhyDesignWorks

REVIEWED BY:

SCALE: As Noted

JOB NO.: 1403.00

DATE: JUL. 25, 2016

DRAWING NUMBER: **A12.15**

TYPE	SIGN TYPE NAME	QTY.	NOTES
A1	Room ID with Pictogram (Single Line)	77	Coordinate Room Name and Number with Owner Prior to Fabrication
A2	Room ID with Painted Raised Message	248	Coordinate Room Name and Number with Owner Prior to Fabrication
A3	Room ID with Assisted Listening Icon	4	Coordinate Room Name and Number with Owner Prior to Fabrication
A4	Room ID with Card Insert	16	Coordinate Room Name and Number with Owner Prior to Fabrication
A5	Room ID with Fixed Name (2"H)	31	
A6	Room ID with Fixed Name (4"H)	8	
A7	Room ID with Fixed Name (8"H)	3	
A8	Room ID with Pictogram (Multiple Line Message)	4	
A9	Supplemental ID Sign	3	
A10	Room ID with Fixed and Supplemental Messaging	2	
A11	MRL Elevator Door Header Plaque	2	
A12	MRL Elevator Door Plaque	3	
B1	Stair/Level Identification Plaque	28	
B2	Elevator Notice	11	
D1	Directional Wall Plaque (1'-6"w x 3'-0"h)	10	Coordinate final messaging with Owner
D2	Directional Wall Plaque (1'-6"w x 2'-0"h)	10	Coordinate final messaging with Owner
D3	Directional Wall Plaque (1'-6"w x 1'-6"h)	0	Coordinate final messaging with Owner
E1	Exterior Metal Letters (10"H)	1	
E3	Interior Primary ID Letters (8"H)	4	
E4	Interior Secondary ID Letters (4.5"H)	8	
F1	Vinyl Applied to Glazed Surfaces	14	
F2	Vinyl Applied to Health Classroom Glass	2	
F3	Vinyl Applied to Gymnasium Glazed Partition	1	
F7	Exterior Door ID Numbers	25	
G1	Exterior Sign at Gymnasium Facade	1	
H1	Cafeteria Zone Signage	4	
J1	Exterior Banners	4	
L1	Acrylic Display Panels with Stand-off Hardware	24	2 Panels in each display
M1	Composite Medalion Feature at Interior Entrance Vestibule	1	
M2	Composite Medalion Feature at Interior Media Center/Reading Room	1	
R1	No Smoking Plaque	6	Locate in the field with Architect
R2	Max. Occupancy Plaque	12	
R3	NO EXIT Plaque	4	
R4	EXIT Plaque	18	Coordinate location
R5	Sprinkler Valve ID Plaque	(TBD)	To be located in the field with Architect and Fire Protection Contractor
R6	Notice at Delivery Entrance	1	
R7	Buzzer Notice at Entrances	2	
V1	Vehicular Post and Panel Directional Signage		Coordinate with Architect
X1	Dedication Plaque	1	Locate in the field with Architect
W1	Digitally Printed Graphic Film with protective Matte Lamination	12	
W2	Digitally Printed Graphic Film with protective Matte Lamination on Cafeteria Roller Doors	4	

SIGN	TYPE	MESSAGE	NOTES

LOWER LEVEL

SIGN	TYPE	MESSAGE	NOTES
LA.01	B2	-01 LEVEL -01 (Braille) [Emergency Egress Plan] In Case of FIRE Do Not Use Elevator Use Exit Stairs	
LA.02		NOT USED	
LA.03	A6	MECHANICAL ROOM L13 (Braille)	
LA.04	A8 (SIM)	(Elevator Symbol) ACCESS TO ELEVATOR (Braille)	
LA.05	B1	STAIR 8 NO ROOF ACCESS -1 LEVEL -1 (Braille) Exit Up to Level 1 Serves Levels -1 & 1 [Up Arrow]	
LA.06A	A6	MAIN ELECTRICAL L12A (Braille)	
LA.06B	A9	Emergency Electric Rm. 2051B Located within this room	
LA.07	A10	EMERGENCY ELECTRICAL No Storage Allowed (Braille)	
LA.08	A6	MECHANICAL ROOM L13 (Braille)	
LA.09	R4	EXIT (Braille)	
LA.10	F7	14	
LA.11-14		NOT USED	
LA.15	A6	SOUND CLOSET L16 (Braille)	
LA.16	A8	[Men's Symbol] BOYS' LOCKER ROOM (Braille)	
LA.17	A4	L10 (Braille)	
LA.18	A4	L10 (Braille)	
LA.19	A1	(Mens' Room Symbol) MEN (Braille)	
LA.20	A1	(Accessible Mens' Room Symbol) RESTOOM (Braille)	
LA.21	A6	GYMNASIUM STOREROOM L09 (Braille)	
LA.22	A5	IDF CLOSET (Braille)	
LA.23	A5	CUSTODIAL (Braille)	
LA.24-29		NOT USED	
LA.30	A4	L06 (Braille)	
LA.31	A8	[Women's Symbol] GIRLS' LOCKER ROOM (Braille)	
LA.32	A4	L06 (Braille)	
LA.33	A1	(Womens' Room Symbol) WOMEN (Braille)	
LA.34	A1	(Accessible Womens' Room Symbol) RESTOOM (Braille)	
LA.35	A2	HEALTH CLASSROOM L04 (Braille)	
LA.36	F2		
LA.37	D1	LL (Upward Left Arrow) Stair to Level 1 Auditorium Band and Chorus Room (Stair Symbol) (Right Arrow) Health Classroom Locker Rooms Elevator & Restrooms (Accessible Restroom Symbol) (Elevator Symbol) (Accessible Symbol)	
LA.38	D1	LL (Upward Right Arrow) Stair to Level 1 Auditorium Band and Chorus Room Classrooms Administration Media Center/Reading Room (Stair Symbol) (Left Arrow) Locker Rooms Gymnasium Health Classroom Elevator & Restrooms (Accessible Restroom Symbol) (Elevator Symbol) (Accessible Symbol)	
LA.39	F3		
LA.40	A2	HEALTH CLASSROOM L04 (Braille)	
LA.41	A1	(Accessible Restroom Symbol) RESTOOM (Braille)	
LA.42	A1	(Womens' Room Symbol) WOMEN (Braille)	
LA.43	A1	(Accessible Restroom Symbol) RESTOOM (Braille)	
LA.44	A2	OT/PT L03 (Braille)	
LA.45	B2	-01 LEVEL -01 (Braille) [Emergency Egress Plan] In Case of FIRE Do Not Use Elevator Use Exit Stairs	
LA.46	A7	ELEVATOR EQUIPMENT ROOM No Storage Allowed Sprinkler Protected (Braille)	
LA.47	A1	(Mens' Room Symbol) MEN (Braille)	
LA.48		NOT USED	
LA.49	F7	11	
LA.50	E3 (SIM)	GYMNASIUM	
LA.51	B1	STAIR 9 NO ROOF ACCESS -1 LEVEL -1 (Braille) Exit This Level Serves Levels -1 & 1 [Star Symbol]	
LA.52	A2	CONCESSIONS L01 (Braille)	
LA.53	E4	CONCESSIONS	
LA.54-59		NOT USED	
LA.60	E4	GYMNASIUM	
LA.61	A2	GYMNASIUM L15 (Braille)	
LA.62	R2	Maximum Occupancy (Number)	Number for occupancy to be supplied by Architect
LA.63	E4	GYMNASIUM	
LA.64	A2	GYMNASIUM L15 (Braille)	
LA.65	E4	GYMNASIUM	
LA.66	A2	GYMNASIUM L15 (Braille)	
LA.67	R2	Maximum Occupancy (Number)	Number for occupancy to be supplied by Architect
LA.68	E4	GYMNASIUM	
LA.69	A2	GYMNASIUM L15 (Braille)	
LA.70	R2	Maximum Occupancy (Number)	Number for occupancy to be supplied by Architect
LA.71	R4	EXIT (Braille)	
LA.72	R4	EXIT (Braille)	
LA.73	F7	10	
LA.74	F7	09	

FIRST FLOOR

SIGN	TYPE	MESSAGE	NOTES
1A.01	A6 (SIM)	RECEIVING/ SUPPLY WORKSHOP	
1A.02	R4	EXIT (Braille)	
1A.03	A2	CUSTODIAN'S OFFICE 146A (Braille)	
1A.04	A2	CUSTODIAN'S BREAK ROOM 146B (Braille)	
1A.05	A5	LOCKERS 146B (Braille)	
1A.06	A1	(Accessible Restroom Symbol) RESTROOM (Braille)	
1A.07	A2	STOREROOM 146D (Braille)	
1A.08	A2	STOREROOM 146D (Braille)	
1A.09		NOT USED	
1A.10	A6 (SIM)	RECYCLING ROOM	
1A.11	R4	EXIT (Braille)	
1A.12	A2	RECYCLING ROOM/TRASH 146C (Braille)	
1A.13	A2	KITCHEN 145A (Braille)	
1A.14A	A5	ELECTRICAL 149B (Braille)	
1A.14B	A9	Emergency Electric Rm. 149B Located within this room	
1A.15	A10	EMERGENCY ELECTRICAL No Storage Allowed (Braille)	
1A.16	A5	CUSTODIAL 149B (Braille)	
1A.17	A2	(COORDINATE MESSAGE WITH ARCHITECT)	
1A.18	B2	1 LEVEL 1 (Braille) [Emergency Egress Plan] In Case of FIRE Do Not Use Elevator Use Exit Stairs	
1A.19	A2	NETWORK/ TELECOM ROOM 149A (Braille)	
1A.20	A8 (SIM)	(Elevator Symbol) ACCESS TO ELEVATOR (Braille)	
1A.21	B1	STAIR 8 NO ROOF ACCESS 1 LEVEL 1 (Braille) Exit This Level Serves Levels LL & 1 [Star Symbol]	
1A.22	D1	01 (Right Arrow) Classrooms Administration Media Center/Reading Room Restrooms (Accessible Restroom Symbol) (Left Arrow) Auditorium Band and Chorus Rooms Gymnasium On Lower Level (Stair Symbol)(Elevator Symbol) (Accessible Symbol)	
1A.23-24		NOT USED	
1A.25	A2	ATTAIN 147A (Braille)	
1A.26	A1	(Accessible Restroom Symbol) RESTOOM (Braille)	
1A.27	A2	QUIET ROOM 147A (Braille)	
1A.28	B1	STAIR 8 NO ROOF ACCESS 1 LEVEL 1 (Braille) Exit This Level Serves Levels LL & 1 [Star Symbol]	
1A.29	R4	EXIT (Braille)	
1A.30	R4	EXIT (Braille)	
1A.31-39		NOT USED	
1A.40	A2	AUDITORIUM STAGE 151B (Braille)	
1A.41	R4	EXIT (Braille)	
1A.42	E4	AUDITORIUM	
1A.43	A2	AUDITORIUM 151A (Braille)	
1A.44	R2	Maximum Occupancy (Number)	Number for occupancy to be supplied by Architect
1A.45	A2	AUDITORIUM 151A (Braille)	
1A.46	E4	AUDITORIUM	
1A.47	F7	06	
1A.48	F7	07	
1A.49	D1	01 (Left Arrow) Gymnasium On Lower Level (Ahead Arrow) Elevator to Lower Level (Elevator Symbol) (Accessible Symbol) (Right Arrow) Auditorium Band and Chorus Rooms Administration Media Center/Reading Room Restrooms (Accessible Restroom Symbol)	
1A.50	A2	BAND/CHORUS STORAGE 152E (Braille)	
1A.51	A2	SET DESIGN/ CONSTRUCTION LAB 155 (Braille)	
1A.51a	R4	EXIT	
1A.52	A2	MUSIC OFFICE 152F (Braille)	
1A.53	E4	BAND/CHORUS	
1A.54	A2	BAND/CHORUS 152A (Braille)	
1A.55	A2	PRACTICE ROOM 152C (Braille)	
1A.56	A2	SET DESIGN/ CONSTRUCTION LAB 155 (Braille)	
1A.56A	R2	Maximum Occupancy 49	
1A.57	A2	PRACTICE ROOM 152D (Braille)	
1A.58	A2	MIDI LAB 154A (Braille)	
1A.59	B2	1 LEVEL 1 (Braille) [Emergency Egress Plan] In Case of FIRE Do Not Use Elevator Use Exit Stairs	
1A.60	A5	STORAGE 154B (Braille)	
1A.61	B1	STAIR 9 NO ROOF ACCESS 1 LEVEL 1 (Braille) Exit Down to Level -1 Serves Levels -1 & 1 [Down Arrow]	
1A.62	G1		
1A.63	F7	12	
1A.64	F7	13	
1A.65	F7	15	
1A.66	F7	16	
1B.01	A2	KILN 134C (Braille)	
1B.02	A2	ACADEMIC TEAM ROOM 135 (Braille)	
1B.03	A2	ART CLASSROOM 134A (Braille)	
1B.04	A2	ACADEMIC TEAM ROOM 135 (Braille)	
1B.05	A2	ACADEMIC TEAM ROOM 135 (Braille)	
1B.06	A2	CLASSROOM 136 (Braille)	
1B.07	A2	PREP ROOM 139B (Braille)	
1B.08	A2	SCIENCE CLASSROOM 139A (Braille)	
1B.09	A2	SMALL GROUP ROOM 137 (Braille)	
1B.10	A2	CLASSROOM 140 (Braille)	
1B.11	A2	CLASSROOM 140 (Braille)	
1B.12	L1		2 panels
1B.13	L1		2 Panels
1B.14	D1	01 (Right Arrow) Classrooms 135–144 Restrooms (Accessible Restroom Symbol) (Ahead Arrow) Auditorium Band and Chorus Rooms Gymnasium On Lower Level Elevator (Stair Symbol)(Elevator Symbol) (Accessible Symbol)	
1B.15-19		NOT USED	
1B.20	A1	[Stair Symbol] STAIR 5 (Braille)	
1B.21	B1	STAIR 5 NO ROOF ACCESS 1 LEVEL 1 (Braille) Exit This Level Serves Levels 1–4 [Star Symbol]	
1B.22	R4	EXIT (Braille)	
1B.23	A2	CLASSROOM 141 (Braille)	
1B.24	A2	SEMINAR ROOM 142 (Braille)	
1B.25	A2	CLASSROOM 144 (Braille)	
1B.26	A2	SEMINAR ROOM 142 (Braille)	
1B.27	A1	(Accessible Mens' Room Symbol) MEN (Braille)	
1B.28	A1	(Accessible Restroom Symbol) RESTOOM (Braille)	
1B.29	A1	(Accessible Restroom Symbol) RESTOOM (Braille)	
1B.30	A1	(Accessible Womens' Room Symbol) WOMEN (Braille)	
1B.31	A1	[Stair Symbol] STAIR 6 (Braille)	
1B.32-39		NOT USED	
1B.40	B1	STAIR 6 NO ROOF ACCESS 1 LEVEL 1 (Braille) Exit This Level Serves Levels 1–4 [Star Symbol]	
1B.41	R4	EXIT (Braille)	
1B.42	R4	EXIT (Braille)	
1B.43	A5	ELECTRICAL (Braille)	
1B.44	A2	KITCHEN 145A (Braille)	
1B.45	A5	STORAGE (Braille)	
1B.46	A2	KITCHEN 145A (Braille)	
1B.47	A1	(Accessible Restroom Symbol) RESTOOM (Braille)	
1B.48	A2	KITCHEN OFFICE 145D (Braille)	
1B.49	H1		
1B.50	B1	STAIR 7 NO ROOF ACCESS 1 LEVEL 1 (Braille) Exit This Level Serves Levels 1 & 2 [Star Symbol]	
1B.51-54		NOT USED	
1B.55	F7	17	
1B.56	F7	18	
1B.57	F7	19	
1B.58	F7	08	
1B.59	W2		
1C.01	A2	TECHNOLOGY LAB 116 (Braille)	
1C.02	A5	SOUND CLOSET (Braille)	
1C.03	A2	ASSISTANT PRINCIPAL 118 (Braille)	
1C.04	A1	(Accessible Restroom Symbol) RESTOOM (Braille)	
1C.05	A5	ELECTRICAL (Braille)	
1C.06	A1	(Accessible Restroom Symbol) RESTOOM (Braille)	
1C.07	A2	TEACHERS' COLLABORATION ROOM 120 (Braille)	
1C.08	A5	CUSTODIAL (Braille)	
1C.09	A2	SSP 5TH GRADE 121A (Braille)	
1C.10	A2	SSP OFFICE 121B (Braille)	
1C.11	A2	CLASSROOM 122 (Braille)	
1C.12	A2	SEMINAR ROOM 123 (Braille)	
1C.13	A2	CLASSROOM 125 (Braille)	
1C.14	A2	SEMINAR ROOM 123 (Braille)	
1C.15	A2	THERAPEUTIC LEARNING 126 (Braille)	
1C.16	A2	SBI READING 127 (Braille)	
1C.17	A1	[Stair Symbol] STAIR 4 (Braille)	
1C.18	B1	STAIR 4 NO ROOF ACCESS 1 LEVEL 1 (Braille) Exit This Level Serves Levels 1–4 [Star Symbol]	
1C.19	R4	EXIT (Braille)	
1C.20	L1		2 Panels
1C.21	L1		2 Panels
1C.22-29		NOT USED	
1C.30	A2	CLASSROOM 128 (Braille)	
1C.31	A2	SMALL GROUP ROOM 129 (Braille)	
1C.32	A2	PREP ROOM 131B (Braille)	
1C.33	A2	SCIENCE CLASSROOM 129 (Braille)	
1C.34	A2	SMALL GROUP ROOM 129 (Braille)	
1C.35	A2	CLASSROOM 132 (Braille)	
1C.36	A2	CLASSROOM 132 (Braille)	
1C.37	A2	ACADEMIC TEAM ROOM 133 (Braille)	

architects

526 Boston Post Rd Wayland, MA
508.358.0790 www.ai3architects.com

BEVERLY MIDDLE SCHOOL

CABOT STREET, BEVERLY, MA 01915

Copyright © 2016 - Ai3 Architects LLC

KEYNOTE LEGEND: (REFERENCE SHEETS A0.01 & A0.02 FOR MASTER KEYNOTE LIST AND KEYNOTES NOT LISTED)

- These drawings are intended to illustrate design intent and should be used as a general reference guideline. All final engineering, fabrication, illumination requirements/restrictions and materials used are to be as specified and/or meet or exceed all required local and national codes.
- The quality of fit and finish on the final product must meet or exceed the requirements of these documents and subsequent approved shop drawings.
- Sample reviews by Owner and Ai3 Architects, LLC shall be conducted for sign types and details listed below in accompanying specifications.
- Colors shown are for reference only and are subject to the limitations of the printing process, and/or finish material specifications. Refer to referenced color systems contained within these drawings for actual color specification.
- Scaled examples shown are for reference only, and do not necessarily reflect actual site conditions. Detailed site surveys are required prior to fabrication and installation.
- All locations are approximate. All final locations are to be determined during pre-installation site walkthroughs, prior to sign fabrication and must be approved by the Owner.
- Messages shown in these drawings are for general reference only. Refer to each site's specific reference drawings/schedule for actual messages.
- Internal and/or external illumination, when used, will always be evenly distributed across the sign's face and fabricated in a way that prevents light leaks, hot spots, and dark spots. All illumination techniques used must comply with all applicable local illumination codes and requirements and are the responsibility of the Fabricator/Contractor.

90% CONSTRUCTION DOCUMENTS

NOT FOR CONSTRUCTION

NORTH ARROW

KEYPLAN

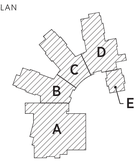

DRAWING NAME:

Sign Schedule

DRAWN BY: WhyDesignWorks

REVIEWED BY:

SCALE: As Noted

JOB NO.: 1403.00

DATE: JUL. 25, 2016

DRAWING NUMBER: **A12.16**

SIGN	TYPE	MESSAGE	NOTES
1C.38	A2	ACADEMIC TEAM ROOM 133 (Braille)	
1C.39	A2	ART CLASSROOM 134A (Braille)	
1C.40	R4	EXIT (Braille)	
1C.41	A2	ACADEMIC TEAM ROOM 133 (Braille)	
1C.42	W1	(Digital artwork for output will be provided by Architect)	
1C.43	D1	01 (Left Arrow) Classrooms 120–133 Restrooms (Accessible Restroom Symbol) (Ahead Arrow) Administration Media Center/Reading Room Elevator to Upper Floors (Elevator Symbol) (Accessible Symbol)	
1C.44		NOT USED	
1C.45	F7	20	
1C.46	F7	21	
1C.47	F7	22	
1C.48-49		NOT USED	
1C.50	F7	05	
1D.01	E1	BEVERLY MIDDLE SCHOOL	
1D.02	R7		Coordinate location with Architect
1D.03	R7		Coordinate location with Architect
1D.04	M1		
1D.05-09			
1D.10	A2	ADMINISTRATION 101A (Braille)	
1D.11	E3	ADMINISTRATION	
1D.12	A2	ADMINISTRATION 101A (Braille)	
1D.13	A2	CONFERENCE ROOM 101G (Braille)	
1D.14	A2	CONFERENCE ROOM 101G (Braille)	
1D.15	A2	MAIL ROOM 101F (Braille)	
1D.16	A1	(Accessible Restroom Symbol) RESTOOM (Braille)	
1D.17	A4	101C (Braille)	
1D.18	A4	101C (Braille)	
1D.19	R4	EXIT (Braille)	
1D.20	A1	[Stair Symbol] STAIR 2 (Braille)	
1D.21	L1		
1D.22	L1		
1D.23-29			
1D.30	R4	EXIT (Braille)	
1D.31	B1	STAIR 3 NO ROOF ACCESS 1 LEVEL 1 (Braille) Exit This Level Serves Levels 1-4 [Star Symbol]	
1D.32	A1	[Stair Symbol] STAIR 3 (Braille)	
1D.33	A2	CLASSROOM 108 (Braille)	
1D.34	A2	CLASSROOM 107 (Braille)	
1D.35	A2	SEMINAR ROOM 105 (Braille)	
1D.36	A2	SEMINAR ROOM 105 (Braille)	
1D.37	A2	OPPORTUNITY ROOM 104 (Braille)	
1D.38	A2	OPPORTUNITY ROOM OFFICE 104A (Braille)	
1D.39	A1	[Stair Symbol] STAIR 2 (Braille)	
1D.40	B1	STAIR 2 NO ROOF ACCESS 1 LEVEL 1 (Braille) Exit This Level Serves Levels 1-4 [Star Symbol]	
1D.41A	A1	(Accessible Womens' Room Symbol) WOMEN (Braille)	
1D.41B	A1	(Accessible Restroom Symbol) RESTOOM (Braille)	
1D.42A	A1	(Accessible Restroom Symbol) RESTOOM (Braille)	

SIGN	TYPE	MESSAGE	NOTES
1D.42B	A1	(Accessible Mens' Room Symbol) MEN (Braille)	
1D.43	A5	ELECTRICAL (Braille)	
1D.44	W1	(Graphic image to be provided for output)	
1D.45	B2	1 LEVEL 1 (Braille) [Emergency Egress Plan] In Case of FIRE Do Not Use Elevator Use Exit Stairs	
1D.46	E3	MEDIA CENTER & READING ROOM	
1D.47	A2	MEDIA CENTER & READING ROOM 100A (Braille)	
1D.48	D1	01 (Left Arrow) Classrooms 104–115 Restrooms (Accessible Restroom Symbol) (Ahead Arrow) Administration Media Center/Reading Room Elevator to Upper Floors (Elevator Symbol) (Accessible Symbol)	
1D.49	D1	01 (Ahead Arrow) Classrooms 104–144 Restrooms (Accessible Restroom Symbol) (Ahead Arrow) Auditorium Gymnasium On Lower Level Elevator (Elevator Symbol) (Accessible Symbol)	
1D.50	A2	CLASSROOM 109 (Braille)	
1D.51	A2	CLASSROOM 110 (Braille)	
1D.52	A2	PREP ROOM 113B (Braille)	
1D.53	A2	SCIENCE CLASSROOM 113A (Braille)	
1D.54	A2	SMALL GROUP ROOM 111 (Braille)	
1D.55	A2	CLASSROOM 114 (Braille)	
1D.56	A2	CLASSROOM 114 (Braille)	
1D.57	A2	ACADEMIC TEAM ROOM 115 (Braille)	
1D.58	A2	ACADEMIC TEAM ROOM 115 (Braille)	
1D.59	A2	TECH LAB 116 (Braille)	
1D.60	R4	EXIT (Braille)	
1D.61	H1		
1D.62-64		NOT USED	
1D.65	F7	23	
1D.66	F7	24	
1D.67	F7	25	
1D.68	F7	01	
1D.69		NOT USED	
1D.70	F7	04	
1D.71	W2		
1E.01	F7	03	
1E.02	R4	EXIT	
1E.03	A2	MULTIMEDIA MAKERSPACE 100B (Braille)	
1E.04	A2	WORKROOM 100C (Braille)	
1E.05	A2	QUIET AREA 100E (Braille)	
1E.06	A2	OFFICE 100D (Braille)	
1E.07	A2	WORKROOM 100C (Braille)	
1E.08	F7	02	
1E.09	M2		

FLOOR 2

SIGN	TYPE	MESSAGE	NOTES
2A.01	A2	SPEECH CLASSROOM 247 (Braille)	
2A.02	A2	CONFERENCE ROOM 248 (Braille)	
2A.03	A4	249 (Braille)	
2A.04	B2	2 LEVEL 2 (Braille) [Emergency Egress Plan] In Case of FIRE Do Not Use Elevator Use Exit Stairs	
2B.01	A2	ACADEMIC TEAM ROOM 235 (Braille)	
2B.02	A2	ACADEMIC TEAM ROOM 235 (Braille)	
2B.03	A2	LANGUAGE CLASSROOM 236 (Braille)	
2B.04	A2	PREP ROOM 239B (Braille)	
2B.05	A2	SCIENCE CLASSROOM 239A (Braille)	
2B.06	A2	SMALL GROUP ROOM 237 (Braille)	
2B.07	A2	CLASSROOM 240 (Braille)	
2B.08	A2	SCIENCE CLASSROOM 239A (Braille)	
2B.09	A2	CLASSROOM 240 (Braille)	
2B.10	L1		2 Panels
2B.11	L1		2 Panels
2B.12-19		NOT USED	
2B.20	A1	[Stair Symbol] STAIR 5 (Braille)	
2B.21	B1	STAIR 5 NO ROOF ACCESS 2 LEVEL 2 (Braille) Exit Level 1 Serves Levels 1-4 [Down Arrow]	
2B.22	A2	CLASSROOM 241 (Braille)	
2B.23	A2	SEMINAR 242 (Braille)	
2B.24	A2	CLASSROOM 244 (Braille)	
2B.25	A2	SEMINAR ROOM 242 (Braille)	
2B.26	A1	(Accessible Mens' Room Symbol) MEN (Braille)	
2B.27	A1	(Accessible Restroom Symbol) RESTOOM (Braille)	
2B.28	A1	(Accessible Restroom Symbol) RESTOOM (Braille)	
2B.29	A1	(Accessible Womens' Room Symbol) WOMEN (Braille)	
2B.30	A1	[Stair Symbol] STAIR 6 (Braille)	
2B.31	B1	STAIR 6 NO ROOF ACCESS 2 LEVEL 2 (Braille) Exit LEVEL 1 Serves Levels 1-4 [Down Arrow]	
2B.32	A2	CLASSROOM 245A (Braille)	
2B.33	A2	QUIET ROOM 245B (Braille)	
2B.34	A1	(Accessible Restroom Symbol) RESTOOM (Braille)	
2B.35	A5	IDF CLOSET (Braille)	
2B.36	D2	02 (Right Arrow) Classrooms 235–245 Restrooms (Accessible Restroom Symbol) (Ahead Arrow) Elevator (Elevator Symbol) (Accessible Symbol)	
2B.37-39		NOT USED	
2B.40	B1	STAIR 7 NO ROOF ACCESS 2 LEVEL 2 (Braille) Exit Level 1 Serves Levels 1 & 2 [Down Arrow]	
2B.41	W1	(Digital artwork for output will be provided by Architect)	
2C.01	A2	SUPERVISORY SPARE OFFICE 218 (Braille)	
2C.02	W1	(Digital artwork for output will be provided by Architect)	
2C.03		NOT USED	
2C.04	A1	(Accessible Restroom Symbol) RESTOOM (Braille)	

SIGN	TYPE	MESSAGE	NOTES
2C.05	A5	IDF CLOSET (Braille)	
2C.06	A1	(Accessible Restroom Symbol) RESTOOM (Braille)	
2C.07	A2	TEACHERS' COLLABORATION ROOM 220 (Braille)	
2C.08	A5	CUSTODIAL (Braille)	
2C.09	A2	SSP 6TH GRADE 221A (Braille)	
2C.10	A2	SSP OFFICE 221B (Braille)	
2C.11	A2	CLASSROOM 222 (Braille)	
2C.12	A2	SMALL GROUP SEMINAR 223 (Braille)	
2C.13	A2	CLASSROOM 225 (Braille)	
2C.14	A2	SMALL GROUP SEMINAR 223 (Braille)	
2C.15	A2	LEARNING CENTER 226 (Braille)	
2C.16	A2	SBI ELA 227 (Braille)	
2C.17	A1	[Stair Symbol] STAIR 4 (Braille)	
2C.18	B1	STAIR 4 NO ROOF ACCESS 2 LEVEL 2 (Braille) Exit LEVEL 1 Serves Levels 1-4 [Down Arrow]	
2C.19	A2	READING CLASSROOM 228A (Braille)	
2C.20	L1		2 Panels
2C.21	L1		2 Panels
2C.22-29		NOT USED	
2C.30	A2	READING CLASSROOM 228A (Braille)	
2C.31	A2	SMALL GROUP ROOM 229 (Braille)	
2C.32	A2	PREP ROOM 231B (Braille)	
2C.33	A2	SCIENCE CLASSROOM 231A (Braille)	
2C.34	A2	SMALL GROUP ROOM 129 (Braille)	
2C.35	A2	CLASSROOM 232 (Braille)	
2C.36	A2	CLASSROOM 231A (Braille)	
2C.37	A2	CLASSROOM 232 (Braille)	
2C.38	A2	ACADEMIC TEAM ROOM 233 (Braille)	
2C.39	A2	ACADEMIC TEAM ROOM 233 (Braille)	
2C.39	D1	02 (Left Arrow) Classrooms 221–233 Restrooms (Accessible Restroom Symbol) (Ahead Arrow) Guidance and Nurse's Center Elevator (Elevator Symbol) (Accessible Symbol)	
2D.01	E3	GUIDANCE & NURSE'S OFFICE	
2D.02	A2	WAITING VESTIBULE 200A (Braille)	
2D.03	A4	200B (Braille)	
2D.04	A4	200C (Braille)	
2D.05	A4	200D (Braille)	
2D.06	A4	200E (Braille)	
2D.07	A5	STORAGE (Braille)	
2D.08	A2	RESTING VESTIBULE 200E (Braille)	
2D.09	A4	201D (Braille)	
2D.10	A2	EXAM ROOM 201C (Braille)	
2D.11	A1	[Stair Symbol] STAIR 2 (Braille)	

SIGN	TYPE	MESSAGE	NOTES
2D.12	A1	(Accessible Restroom Symbol) RESTOOM (Braille)	
2D.13	A2	EXAM ROOM 201B (Braille)	
2D.14	A2	NURSE'S SUITE 201A (Braille)	
2D.15	L1		2 Panels
2D.16	L1		2 Panels
2D.17-19		NOT USED	
2D.20	B2	2 LEVEL 2 (Braille) [Emergency Egress Plan] In Case of FIRE Do Not Use Elevator Use Exit Stairs	
2D.21	W1	(Digital artwork for output will be provided by Architect)	
2D.22-29		NOT USED	
2D.30	A2	CLASSROOM 209 (Braille)	
2D.31	B1	STAIR 3 NO ROOF ACCESS 2 LEVEL 2 (Braille) Exit Level 1 Serves Levels 1-4 [Down Arrow]	
2D.32	A1	[Stair Symbol] STAIR 3 (Braille)	
2D.33	A2	READING CLASSROOM 208 (Braille)	
2D.34	A2	CLASSROOM 207 (Braille)	
2D.35	A2	SEMINAR ROOM 205 (Braille)	
2D.36	A2	SEMINAR ROOM 205 (Braille)	
2D.37	A2	CLASSROOM 204 (Braille)	
2D.38		NOT USED	
2D.39	A1	[Stair Symbol] STAIR 2 (Braille)	
2D.40	B1	STAIR 2 NO ROOF ACCESS 2 LEVEL 2 (Braille) Exit Level 1 Serves Levels 1-4 [Down Arrow]	
2D.41A	A1	(Accessible Womens' Room Symbol) WOMEN (Braille)	
2D.41B	A1	(Accessible Restroom Symbol) RESTOOM (Braille)	
2D.42	A1	(Accessible Restroom Symbol) RESTOOM (Braille)	
2D.43	A5	IDF CLOSET (Braille)	
2D.44	A1	(Accessible Mens' Room Symbol) MEN (Braille)	
2D.45	A2	MEETING ROOM 217B (Braille)	
2D.46	A2	MEETING ROOM 217A (Braille)	
2D.47	D1	02 (Left Arrow) Classrooms 204–215 Restrooms (Accessible Restroom Symbol) (Ahead Arrow) Guidance and Nurse's Center Elevator (Elevator Symbol) (Accessible Symbol)	
2D.48	D2	02 (Right Arrow) Classrooms 204–245 Restrooms (Accessible Restroom Symbol) (Left Arrow) Guidance and Nurse's Center	
2D.49		NOT USED	
2D.50	A2	CLASSROOM 210 (Braille)	
2D.51	A2	SMALL GROUP ROOM 211 (Braille)	
2D.52	A2	PREP ROOM 213B (Braille)	
2D.53	A2	SCIENCE CLASSROOM 213A (Braille)	
2D.54	A2	SMALL GROUP ROOM 211 (Braille)	
2D.55	A2	CLASSROOM 214 (Braille)	

SIGN	TYPE	MESSAGE	NOTES
2D.56	A2	SCIENCE CLASSROOM 213A (Braille)	
2D.57	A2	CLASSROOM 214 (Braille)	
2D.58	A2	ACADEMIC TEAM ROOM 215 (Braille)	
2D.59	A2	ACADEMIC TEAM ROOM 215 (Braille)	
2D.60	B1	STAIR 1 NO ROOF ACCESS 2 LEVEL 2 (Braille) Exit Level 1 Serves Levels 1 &2 [Down Arrow]	

FLOOR 3

SIGN	TYPE	MESSAGE	NOTES
3A.01	A6	EGRESS TO ROOF Authorized Personnel Only (Braille)	
3A.02	A5	STORAGE (Braille)	
3A.03	B2	3 LEVEL 3 (Braille) [Emergency Egress Plan] In Case of FIRE Do Not Use Elevator Use Exit Stairs	
3B.01	A2	ACADEMIC TEAM ROOM 335 (Braille)	
3B.02	A2	ART CLASSROOM 334A (Braille)	
3B.03	A2	ACADEMIC TEAM ROOM 335 (Braille)	
3B.04	A2	LANGUAGE CLASSROOM 336 (Braille)	
3B.05	A2	PREP ROOM 339B (Braille)	
3B.06	A2	SCIENCE CLASSROOM 339A (Braille)	
3B.06A	R2	Maximum Occupancy 49	
3B.07	A2	SMALL GROUP ROOM 337 (Braille)	
3B.08	A2	CLASSROOM 340 (Braille)	
3B.09	L1		2 Panels
3B.10	L1		2 Panels
3B.11	H1		
3B.12	W2		
3B.09-19		NOT USED	
3B.20	A1	[Stair Symbol] STAIR 5 (Braille)	
3B.21	B1	STAIR 5 NO ROOF ACCESS 3 LEVEL 3 (Braille) Exit Level 1 Serves Levels 1-4 [Down Arrow]	
3B.22	A2	CLASSROOM 341 (Braille)	
3B.23	A2	SEMINAR ROOM 342 (Braille)	
3B.24	A2	CLASSROOM 344 (Braille)	
3B.25	A2	SEMINAR ROOM 342 (Braille)	
3B.26	A1	(Accessible Mens' Room Symbol) MEN (Braille)	
3B.27	A1	(Accessible Restroom Symbol) RESTOOM (Braille)	
3B.28	A1	(Accessible Restroom Symbol) RESTOOM (Braille)	
3B.29	A1	(Accessible Womens' Room Symbol) WOMEN (Braille)	
3B.30	A1	[Stair Symbol] STAIR 6 (Braille)	
3B.31	B1	STAIR 6 NO ROOF ACCESS 3 LEVEL 3 (Braille) Exit LEVEL 1 Serves Levels 1-4 [Down Arrow]	
3B.32	A2	KITCHEN 345A (Braille)	
3B.33	A5	ELECTRICAL (Braille)	

ai3 architects
526 Boston Post Rd Wayland, MA
508.358.0790 www.ai3architects.com

BEVERLY MIDDLE SCHOOL

CABOT STREET, BEVERLY, MA 01915

KEYNOTE LEGEND: (REFERENCE SHEETS A0.01 & A0.02 FOR MASTER KEYNOTE LIST AND KEYNOTES NOT LISTED)

- These drawings are intended to illustrate design intent and should be used as a general reference guideline. All final engineering, fabrication, illumination requirements/restrictions and materials used are to be as specified and/or meet or exceed all required local and national codes.
- The quality of fit and finish on the final product must meet or exceed the requirements of these documents and subsequent approved shop drawings.
- Sample reviews by Owner and Ai3 Architects, LLC shall be conducted for sign types and details listed below in accompanying specifications.
- Colors shown are for reference only and are subject to the limitations of the printing process, and/or finish material specifications. Refer to referenced color systems contained within these drawings for actual color specification.
- Scaled examples shown are for reference only, and do not necessarily reflect actual site conditions. Detailed site surveys are required prior to fabrication and installation.
- All locations are approximate. All final locations are to be determined during pre-installation site walkthroughs, prior to sign fabrication and must be approved by the Owner.
- Messages shown in these drawings are for general reference only. Refer to each site's specific reference drawings/schedule for actual messages.
- Internal and/or external illumination, when used, will always be evenly distributed across the sign's face and fabricated in a way that prevents light leaks, hot spots, and dark spots. All illumination techniques used must comply with all applicable local illumination codes and requirements and are the responsibility of the Fabricator/Contractor.

90% CONSTRUCTION DOCUMENTS

NOT FOR CONSTRUCTION

NORTH ARROW

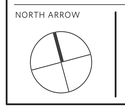

KEYPLAN

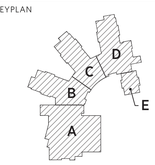

DRAWING NAME:

Sign Schedule

DRAWN BY: WhyDesignWorks

REVIEWED BY:

SCALE: **As Noted**

JOB NO.: **1403.00**

DATE: **JUL. 25, 2016**

DRAWING NUMBER: **A12.17**

Copyright © 2016 Ai3 Architects, LLC

SIGN	TYPE	MESSAGE	NOTES
3B.34	A2	OFFICE 345B (Braille)	
3B.35	A5	MOP CLOSET (Braille)	
3B.36	A2	KITCHEN 345A (Braille)	
3B.37	D2	03 (Right Arrow) Classrooms 335–344 Restrooms (Accessible Restroom Symbol) (Ahead Arrow) Elevator (Elevator Symbol) (Accessible Symbol)	
3C.01	A2	ASSISTANT PRINCIPAL OFFICE 318 (Braille)	
3C.02	A5	SOUND CLOSET (Braille)	
3C.03		NOT USED	
3C.04	A1	(Accessible Restroom Symbol) RESTOOM (Braille)	
3C.05	A5	ELECTRICAL (Braille)	
3C.06	A1	(Accessible Restroom Symbol) RESTOOM (Braille)	
3C.07	A2	TEACHERS' COLLABORATION ROOM 320 (Braille)	
3C.08	A5	CUSTODIAL (Braille)	
3C.09	A2	SSP 7TH GRADE 321A (Braille)	
3C.10	A2	SSP OFFICE 321B (Braille)	
3C.11	A2	CLASSROOM 322 (Braille)	
3C.12	A2	SMALL GROUP SEMINAR 323 (Braille)	
3C.13	A2	CLASSROOM 325 (Braille)	
3C.14	A2	SMALL GROUP SEMINAR 323 (Braille)	
3C.15	A2	LEARNING CENTER 326 (Braille)	
3C.16	A2	SBI MATH 327 (Braille)	
3C.17	A1	[Stair Symbol] STAIR 4 (Braille)	
3C.18	B1	STAIR 4 NO ROOF ACCESS 3 LEVEL 3 (Braille) Exit LEVEL 1 Serves Levels 1-4 [Down Arrow]	
3C.19	L1		2 Panels
3C.20	L1		2 Panels
3C.21-29		NOT USED	
3C.30	A2	READING CLASSROOM 328A (Braille)	
3C.31	A2	SMALL GROUP ROOM 329 (Braille)	
3C.32	A2	PREP ROOM 331B (Braille)	
3C.33	A2	SCIENCE CLASSROOM 331A (Braille)	
3C.33A	R2	Maximum Occupancy 49	
3C.34	A2	SMALL GROUP ROOM 329 (Braille)	
3C.35	A2	CLASSROOM 332 (Braille)	
3C.36	A2	ACADEMIC TEAM ROOM 333 (Braille)	
3C.37	A2	ACADEMIC TEAM ROOM 333 (Braille)	
3C.38	A2	ART CLASSROOM 334A (Braille)	
3C.39	W1	(Digital artwork for output will be provided by Architect)	
3C.40	A2	ART CLASSROOM 334A (Braille)	
3C.41	A2	MULTIMEDIA LAB 316 (Braille)	

SIGN	TYPE	MESSAGE	NOTES
3C.42	D2	03 (Left Arrow) Classrooms 322–333 Restrooms (Accessible Restroom Symbol) (Ahead Arrow) Elevator (Elevator Symbol) (Accessible Symbol)	
3D.01	A5	CUSTODIAL (Braille)	
3D.02	B2	3 LEVEL 3 (Braille) [Emergency Egress Plan] In Case of FIRE Do Not Use Elevator Use Exit Stairs	
3D.03	W1	(Digital artwork for output will be provided by Architect)	
3D.04	A1	(Accessible Restroom Symbol) RESTOOM (Braille)	
3D.05	A5	ELECTRICAL (Braille)	
3D.06	A1	(Accessible Mens' Room Symbol) MEN (Braille)	
3D.07	A1	(Accessible Restroom Symbol) RESTOOM (Braille)	
3D.08	A1	(Accessible Womens' Room Symbol) WOMEN (Braille)	
3D.09		NOT USED	
3D.10	A1	[Stair Symbol] STAIR 2 (Braille)	
3D.11	B1	STAIR 2 NO ROOF ACCESS 3 LEVEL 3 (Braille) Exit Level 1 Serves Levels 1-4 [Down Arrow]	
3D.12	A2	CLASSROOM 304 (Braille)	
3D.13	A2	SMALL GROUP ROOM 305 (Braille)	
3D.14	A2	SMALL GROUP ROOM 305 (Braille)	
3D.15	A2	CLASSROOM 307 (Braille)	
3D.16	A2	CLASSROOM 308 (Braille)	
3D.17	A2	CLASSROOM 309 (Braille)	
3D.18	A1	[Stair Symbol] STAIR 3 (Braille)	
3D.19	B1	STAIR 3 NO ROOF ACCESS 3 LEVEL 3 (Braille) Exit Level 1 Serves Levels 1-4 [Down Arrow]	
3D.20	L1		2 Panels
3D.21	L1		2 Panels
3D.20-29		NOT USED	
3D.30	A2	CLASSROOM 310 (Braille)	
3D.31	A2	SMALL GROUP ROOM 311 (Braille)	
3D.32	A2	PREP ROOM 313B (Braille)	
3D.33	A2	CLASSROOM 313A (Braille)	
3D.33A	R2	Maximum Occupancy 49	
3D.34	A2	SMALL GROUP ROOM 311 (Braille)	
3D.35	A2	CLASSROOM 314 (Braille)	
3D.36	A2	ACADEMIC TEAM ROOM 315 (Braille)	
3D.37	A2	ACADEMIC TEAM ROOM 315 (Braille)	
3D.38	A2	MULTIMEDIA LAB 316 (Braille)	
3D.39	A2	ACADEMIC TEAM ROOM 315 (Braille)	
3D.40	A4	317E (Braille)	
3D.41	A4	317D (Braille)	
3D.42		NOT USED	
3D.43	H1		

SIGN	TYPE	MESSAGE	NOTES
3D.44	D2	03 (Left Arrow) Classrooms 304–315 Restrooms (Accessible Restroom Symbol) (Ahead Arrow) Elevator (Elevator Symbol) (Accessible Symbol)	
3D.45	D2	03 (Right Arrow) Classrooms 304–344 Restrooms (Accessible Restroom Symbol)	
3D.46	W2		

FLOOR 4

SIGN	TYPE	MESSAGE	NOTES
4A.01	A5	ELECTRICAL (Braille)	
4A.01a	A9	Emergency Electric Rm. 448B Located within this room	
4A.01b	A10	EMERGENCY ELECTRICAL No Storage Allowed (Braille)	
4A.02	A7	ELEVATOR EQUIPMENT ROOM No Storage Allowed Sprinkler Protected (Braille)	
4A.03	B2	4 LEVEL 4 (Braille) [Emergency Egress Plan] In Case of FIRE Do Not Use Elevator Use Exit Stairs	
4B.01	A2	ACADEMIC TEAM ROOM 435 (Braille)	
4B.02		NOT USED	
4B.03	A2	ACADEMIC TEAM ROOM 435 (Braille)	
4B.04	A2	CLASSROOM 436 (Braille)	
4B.05	A2	PREP ROOM 439B (Braille)	
4B.06	A2	SCIENCE CLASSROOM 439A (Braille)	
4B.06A	R2	Maximum Occupancy 49	
4B.07	A2	SMALL GROUP ROOM 437 (Braille)	
4B.08	L1		2 Panels
4B.09	L1		2 Panels
4B.10-19		NOT USED	
4B.20	A1	[Stair Symbol] STAIR 5 (Braille)	
4B.21	B1	STAIR 5 NO ROOF ACCESS 4 LEVEL 4 (Braille) Exit Level 1 Serves Levels 1-4 [Down Arrow]	
4B.22	A2	CLASSROOM 441 (Braille)	
4B.23	A2	SEMINAR ROOM 442 (Braille)	
4B.24	A2	CLASSROOM 444 (Braille)	
4B.25	A2	SEMINAR ROOM 442 (Braille)	
4B.26	A1	(Accessible Mens' Room Symbol) MEN (Braille)	
4B.27	A1	(Accessible Restroom Symbol) RESTOOM (Braille)	
4B.28	A1	(Accessible Restroom Symbol) RESTOOM (Braille)	
4B.29	A1	(Accessible Womens' Room Symbol) WOMEN (Braille)	
4B.30	A1	[Stair Symbol] STAIR 6 (Braille)	
4B.31	B1	STAIR 6 NO ROOF ACCESS 4 LEVEL 4 (Braille) Exit LEVEL 1 Serves Levels 1-4 [Down Arrow]	
4B.32	A2	READING CLASSROOM 445 (Braille)	
4B.33	A5	IDF CLOSET (Braille)	

SIGN	TYPE	MESSAGE	NOTES
4B.34	D2	04 (Right Arrow) Classrooms 435–445 Restrooms (Accessible Restroom Symbol) (Ahead Arrow) Elevator (Elevator Symbol) (Accessible Symbol)	
4B.35		NOT USED	
4B.36	A5	CUSTODIAL (Braille)	
4B.37	W1	(Digital artwork for output will be provided by Architect)	
4B.38-39		NOT USED	
4B.40	A1	[Stair Symbol] STAIR 7 (Braille)	
4C.01	A2	SUPERVISORY SPARE OFFICE 418 (Braille)	
4C.02	W1	(Digital artwork for output will be provided by Architect)	
4C.03		NOT USED	
4C.04	A1	(Accessible Restroom Symbol) RESTOOM (Braille)	
4C.05	A5	IDF CLOSET (Braille)	
4C.06	A1	(Accessible Restroom Symbol) RESTOOM (Braille)	
4C.07	A2	TEACHERS' COLLABORATION ROOM 420 (Braille)	
4C.08	A5	CUSTODIAL (Braille)	
4C.09	A2	SSP 8TH GRADE 421A (Braille)	
4C.10	A2	SSP OFFICE 421B (Braille)	
4C.11	A2	CLASSROOM 422 (Braille)	
4C.12	A2	SMALL GROUP SEMINAR 423 (Braille)	
4C.13	A2	CLASSROOM 425 (Braille)	
4C.14	A2	SMALL GROUP SEMINAR 423 (Braille)	
4C.15	A2	THERAPEUTIC LEARNING 426 (Braille)	
4C.16	A2	SBI SS 427 (Braille)	
4C.17	A1	[Stair Symbol] STAIR 4 (Braille)	
4C.18	B1	STAIR 4 NO ROOF ACCESS 4 LEVEL 4 (Braille) Exit LEVEL 1 Serves Levels 1-4 [Down Arrow]	
4C.19	L1		2 Panels
4C.20	L1		2 Panels
4C.21-24		NOT USED	
4C.25	J1		
4C.26	J1		
4C.27	J1		
4C.28	J1		
4C.29-31		NOT USED	
4C.32	A2	PREP ROOM 431B (Braille)	
4C.33	A2	SCIENCE CLASSROOM 431A (Braille)	
4C.33A	R2	Maximum Occupancy 49	
4C.34	A2	SMALL GROUP ROOM 429 (Braille)	
4C.35	A2	CLASSROOM 432 (Braille)	
4C.36	A2	ACADEMIC TEAM ROOM 433 (Braille)	
4C.37	A2	ACADEMIC TEAM ROOM 433 (Braille)	
4C.38	D2	04 (Left Arrow) Classrooms 421–433 Restrooms (Accessible Restroom Symbol) (Ahead Arrow) Elevator (Elevator Symbol) (Accessible Symbol)	
4D.01	A7	ELEVATOR EQUIPMENT ROOM No Storage Allowed Sprinkler Protected (Braille)	

SIGN	TYPE	MESSAGE	NOTES
4D.02	B2	4 LEVEL 4 (Braille) [Emergency Egress Plan] In Case of FIRE Do Not Use Elevator Use Exit Stairs	
4D.03	W1	(Digital artwork for output will be provided by Architect)	
4D.04	A1	(Accessible Restroom Symbol) RESTOOM (Braille)	
4D.05	A5	IDF CLOSET (Braille)	
4D.06	A1	(Accessible Mens' Room Symbol) MEN (Braille)	
4D.07	A1	(Accessible Restroom Symbol) RESTOOM (Braille)	
4D.08	A1	(Accessible Womens' Room Symbol) WOMEN (Braille)	
4D.09		NOT USED	
4D.10	A1	[Stair Symbol] STAIR 2 (Braille)	
4D.11	B1	STAIR 2 NO ROOF ACCESS 4 LEVEL 4 (Braille) Exit Level 1 Serves Levels 1-4 [Down Arrow]	
4D.12	A2	CLASSROOM 404 (Braille)	
4D.13	A2	SMALL GROUP ROOM 405 (Braille)	
4D.14	A2	SMALL GROUP ROOM 405 (Braille)	
4D.15	A2	CLASSROOM 407 (Braille)	
4D.16	A2	CLASSROOM 408 (Braille)	
4D.17	A2	CLASSROOM 409 (Braille)	
4D.18	A1	[Stair Symbol] STAIR 3 (Braille)	
4D.19	B1	STAIR 1 NO ROOF ACCESS 4 LEVEL 4 (Braille) Exit Level 1 Serves Levels 1-4 [Down Arrow]	
4D.20	L1		2 Panels
4D.21	L1		2 Panels
4D.22-31		NOT USED	
4D.32	A2	PREP ROOM 413B (Braille)	
4D.33	A2	SCIENCE CLASSROOM 413A (Braille)	
4D.33A	R2	Maximum Occupancy 49	
4D.34	A2	SMALL GROUP ROOM 411 (Braille)	
4D.35	A2	CLASSROOM 414 (Braille)	
4D.36	A2	ACADEMIC TEAM ROOM 415 (Braille)	
4D.37	A2	ACADEMIC TEAM ROOM 415 (Braille)	
4D.37	D2	04 (Left Arrow) Classrooms 404–415 Restrooms (Accessible Restroom Symbol) (Ahead Arrow) Elevator (Elevator Symbol) (Accessible Symbol)	
4D.39	D2	04 (Right Arrow) Classrooms 404–445 Restrooms (Accessible Restroom Symbol)	
4D.40	A4	417B (Braille)	
4D.41	A4	417A (Braille)	
4D.42		NOT USED	

ai3 architects

526 Boston Post Rd Wayland, MA
508.358.0790 www.ai3architects.com

BEVERLY MIDDLE SCHOOL

CABOT STREET, BEVERLY, MA 01915

KEYNOTE LEGEND: (REFERENCE SHEETS A0.01 & A0.02 FOR MASTER KEYNOTE LIST AND KEYNOTES NOT LISTED)

- These drawings are intended to illustrate design intent and should be used as a general reference guideline. All final engineering, fabrication, illumination requirements/restrictions and materials used are to be as specified and/or meet or exceed all required local and national codes.
- The quality of fit and finish on the final product must meet or exceed the requirements of these documents and subsequent approved shop drawings.
- Sample reviews by Owner and Ai3 Architects, LLC shall be conducted for sign types and details listed below in accompanying specifications.
- Colors shown are for reference only and are subject to the limitations of the printing process, and/or finish material specifications. Refer to referenced color systems contained within these drawings for actual color specification.
- Scaled examples shown are for reference only, and do not necessarily reflect actual site conditions. Detailed site surveys are required prior to fabrication and installation.
- All locations are approximate. All final locations are to be determined during pre-installation site walkthroughs, prior to sign fabrication and must be approved by the Owner.
- Messages shown in these drawings are for general reference only. Refer to each site's specific reference drawings/schedule for actual messages.
- Internal and/or external illumination, when used, will always be evenly distributed across the sign's face and fabricated in a way that prevents light leaks, hot spots, and dark spots. All illumination techniques used must comply with all applicable local illumination codes and requirements and are the responsibility of the Fabricator/Contractor.

90% CONSTRUCTION DOCUMENTS

NOT FOR CONSTRUCTION

NORTH ARROW

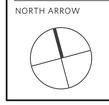

KEYPLAN

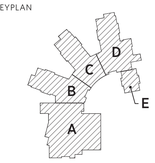

Copyright © 2016 Ai3 Architects, LLC

DRAWING NAME:

Sign Schedule

DRAWN BY: WhyDesignWorks

REVIEWED BY:

SCALE: **As Noted**

JOB NO.: **1403.00**

DATE: **JUL. 25, 2016**

DRAWING NUMBER: **A12.18**