M:\BEV98\SP102cherryhillR6.dwg, 4/22/2016 11:39:48 AM, TC

CHERRY HILL DRIVE
(PUBLIC WAY)

LOT B
#102 CHERRY HILL DRIVE
254,968 S.F.
5.853 ACRES

SAM FONZO DRIVE

LIMIT OF AIRPORT APPROACH ZONE

LOCUS MAP
SCALE: 1"=800'

CHERRY HILL DR
SAM FONZO DR
COMANT ST
ROUTE 128
CABOT ST
TRASK ST
J.P HENDERSON RD
BEVERLY MUNICIPAL AIRPORT
LOCUS

Drawing No.:	EX
	SHEET 1 OF 3
Drawing Title:	EXISTING CONDITIONS PLAN HIGH RES BIOSOLUTIONS #102 CHERRY HILL DRIVE BEVERLY, MASS.
	Scale: 1"=20' 0' 10' 20' 40' Date: March 3, 2016

No.	Revision	Date
10		
9		
8		
7		
6		
5		
4		
3		
2	Outlet Control Structure	4-19-2016
1	City Comments	4-12-2016

Design By: EBL
Drawn By: EBL
Checked By: PJO
Project File: BEV-0171A
Comp. No: BE98

☐ Issued For Permit
☐ Issued For Review
☐ Issued For Bid
☐ Issued For Construction
☒ Not For Construction

Seal:

Prepared By:
Hayes Engineering, Inc.
603 Salem Street
Wakefield, MA 01880
Ph: 781.246.2800
Fax: 781.246.7596
www.hayeseng.com

Prepared For:
Applicant
CONNOLLY BROTHERS, INC.
152 CONANT STREET
BEVERLY, MA 01915-1659

NOTES:

1) DATUM IS NGVD
2) ALL DRAIN LINES TO BE HDPE UNLESS OTHERWISE SPECIFIED.
3) EXISTING UTILITIES TAKEN FROM A PLAN ENTITLED "CONSTRUCTION SITE PLAN" BY MERIDIAN ASSOCIATES DATED SEPTEMBER 12, 2012"
4) EXISTING TOPOGRAPHY IS THE RESULT OF AN ACTUAL FIELD SURVEY BY HAYES ENGINEERING, INC. PERFORMED DECEMBER 8, 2012 THROUGH DECEMBER 13, 2012.
5) THERE ARE NO WETLANDS WITHIN 100' OF THE PROPERTY BOUNDARY.
6) STEEP SLOPES TO BE GRADED WITH A TRACK MACHINE NORMAL TO THE SLOPE.
7) STEEP SLOPES TO BE PROTECTED WITH COCO MAT.
8) SEE SITE ELECTRIC PLAN FOR SITE ELECTRICAL LAYOUT LOCATIONS.

ZONING TABLE

ZONE	IR (RESTRICTED INDUSTRIAL)	
DIMENSIONAL CONTROLS	REQUIRED/ALLOWED	PROPOSED
FRONT YARD SETBACK	30 ft.	31.0± ft.
SIDE YARD SETBACK	20 ft.	158.0± ft.
REAR YARD SETBACK	25 ft.	364.7± ft.
MIN. FRONTAGE	225 ft.	399.62 ft.
MIN. LOT AREA	2 acres	5.83 acres
MAX. BUILDING HEIGHT	60 ft.	<35 ft.
MAX. LOT COVERAGE (bldgs.)	40%	15.8%
MAX. LOT COVERAGE (bldgs./paving)	60%	55.5%

PARKING CALCULATIONS

CALCULATION	REQUIRED/ALLOWED	PROPOSED
REQUIRED OFFICE: 1 space/250 GROSS SQUARE FOOTAGE (40,000 S.F.)	160 spaces	160 (9'x18')
REQUIRED MANUFACTURING: 2.5 spaces/1000 S.F. (40,000 S.F.)	100 spaces	100 (9'x18')
TOTAL SPACES	260 spaces	260 spaces

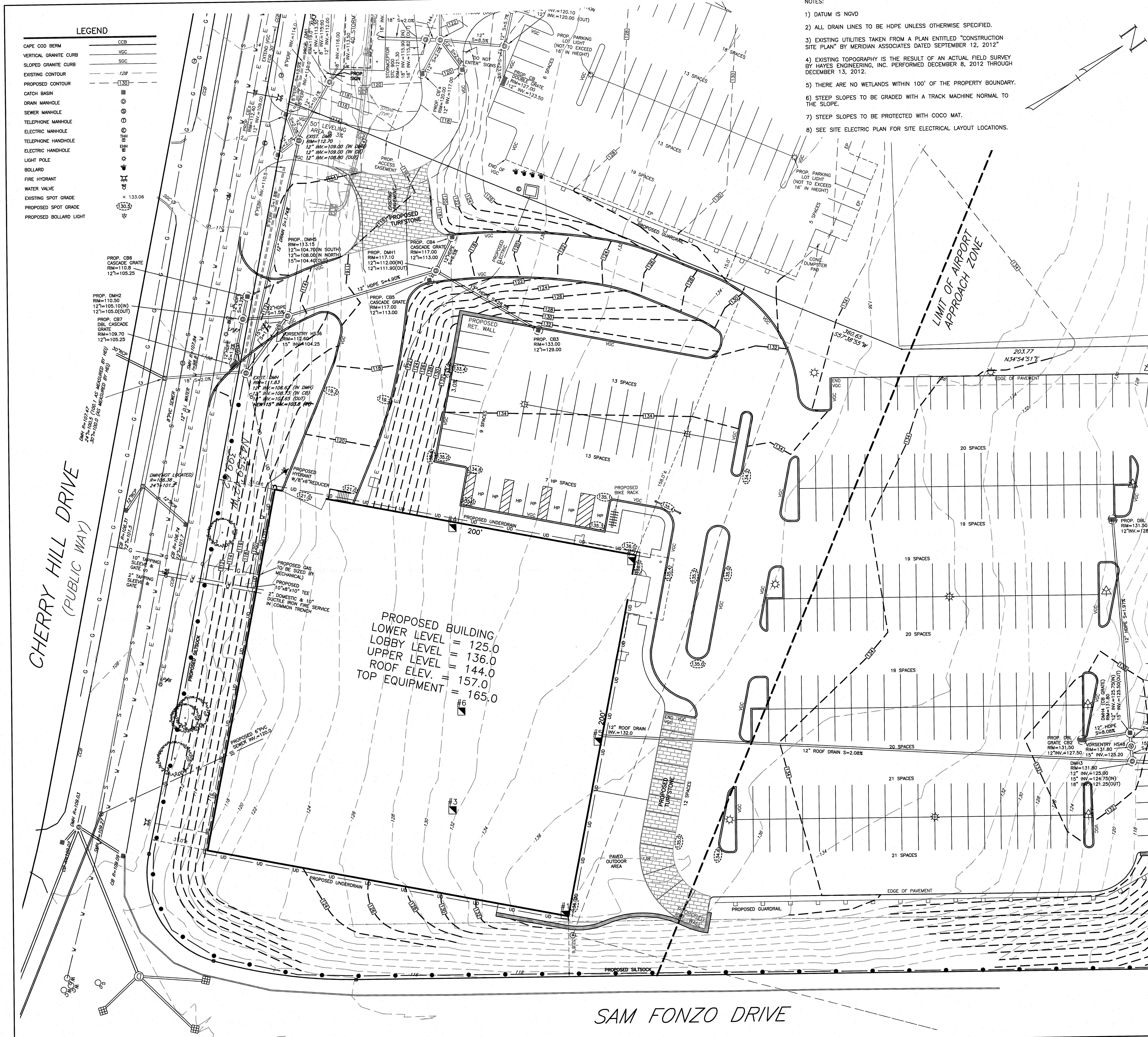

Prepared For:

Applicant

CONNOLLY BROTHERS, INC.
152 CONANT STREET
BEVERLY, MA 01915-1659

Prepared By:

Hayes Engineering, Inc.
603 Salem Street
Wakefield, MA 01880
Ph: 781.246.2800
Fax: 781.246.7596
www.hayeseng.com

Seal:

PETER J. OGREN
REGISTERED PROFESSIONAL ENGINEER
COMMONWEALTH OF MASSACHUSETTS

Design By: EBL
Drawn By: EBL
Checked By: PJO
Project File: BEV-0171A
Comp. No: BEV98

☒ Issued For Permit
☐ Issued For Review
☐ Issued For Bid
☐ Issued For Construction
☒ Not For Construction

No.	Revision	Date
1	City comments	4-12-2016
2	Outlet Control Structure	4-19-2016
3		
4		
5		
6		
7		
8		
9		
10		

Scale: 1"=20'
0' 10' 20' 40'

Date: March 3, 2016

Drawing Title:

SITE PLAN
HIGH RES BIOSOLUTIONS
#102 CHERRY HILL DRIVE
BEVERLY, MASS.

Drawing No.:

C1

SHEET 2 OF 3

V98\SP102cherryhillR6.dwg, 4/22/2016 11:25:42 AM, TC

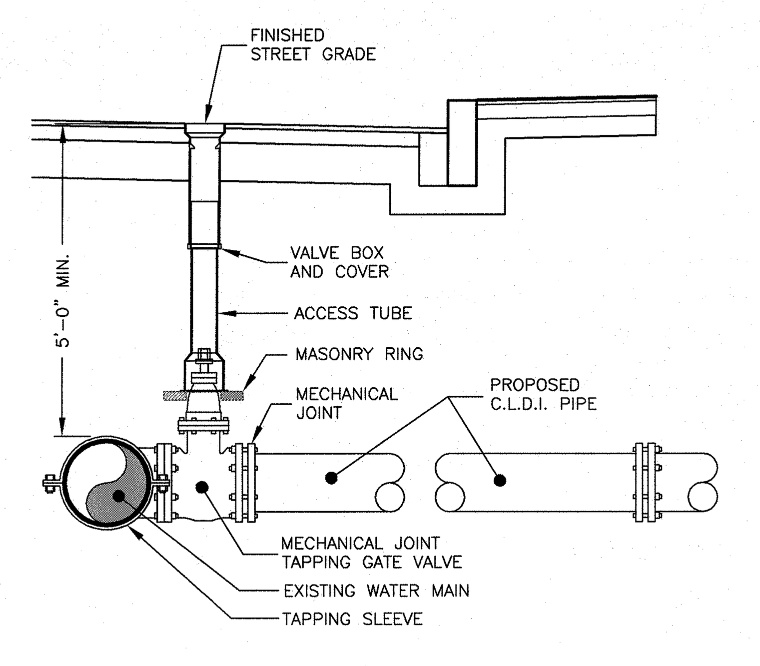

TAPPING SLEEVE & GATE
NOT TO SCALE

NOTES:
1. CONCRETE THRUST BLOCK TO BE USED ONLY WHERE IT WILL BEAR ON UNDISTURBED EARTH.
2. USE RESTRAINED JOINT FITTINGS OR TIE RODS WHERE CONCRETE THRUST BLOCK IS UNACCEPTABLE.
3. SIZE OF BLOCK OR MEGALUG TO BE DESIGNED FOR SPECIFIC CONDITIONS.

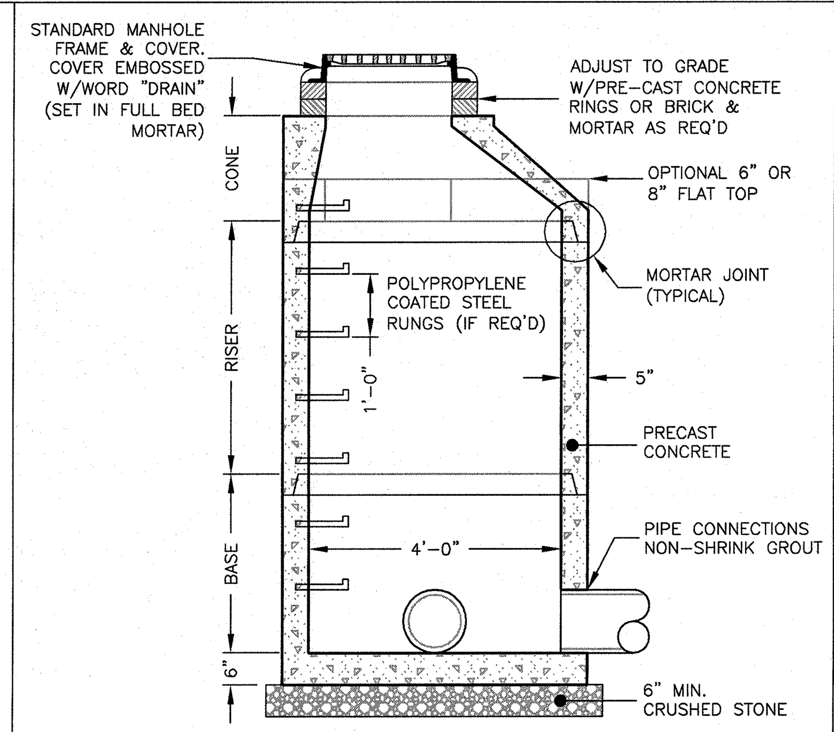

PRE-CAST DRAIN MANHOLE
NOT TO SCALE

NOTES:
1. CONCRETE: 4,000 PSI MINIMUM AFTER 28 DAYS.
2. REINFORCED STEEL CONFORMS TO LATEST ASTM A185 SPEC. 0.12 SQ. IN./LINEAL FT. AND 0.12 SQ. IN. (BOTH WAYS) BASE BOTTOM.
3. H-20 DESIGN LOADING PER AASHTO HS-20-44; ASTM C478 SPEC FOR "PRECAST REINFORCED CONCRETE MANHOLE SECTIONS."

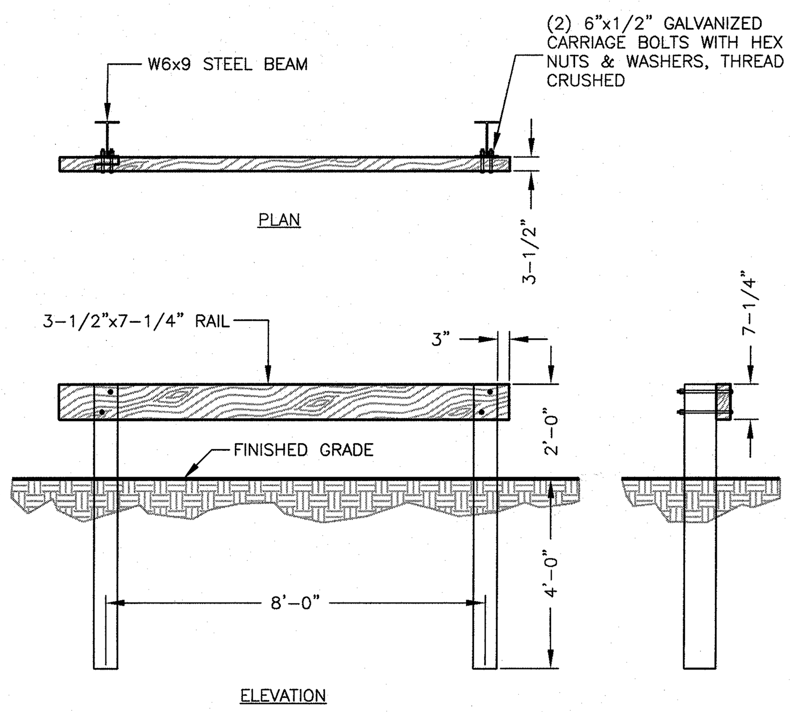

WOOD GUARDRAIL-STEEL POSTS
NOT TO SCALE

NOTE:
1. ALL SPLICES TO BE AT POSTS.
2. USE PRESSURE TREATED WOOD.

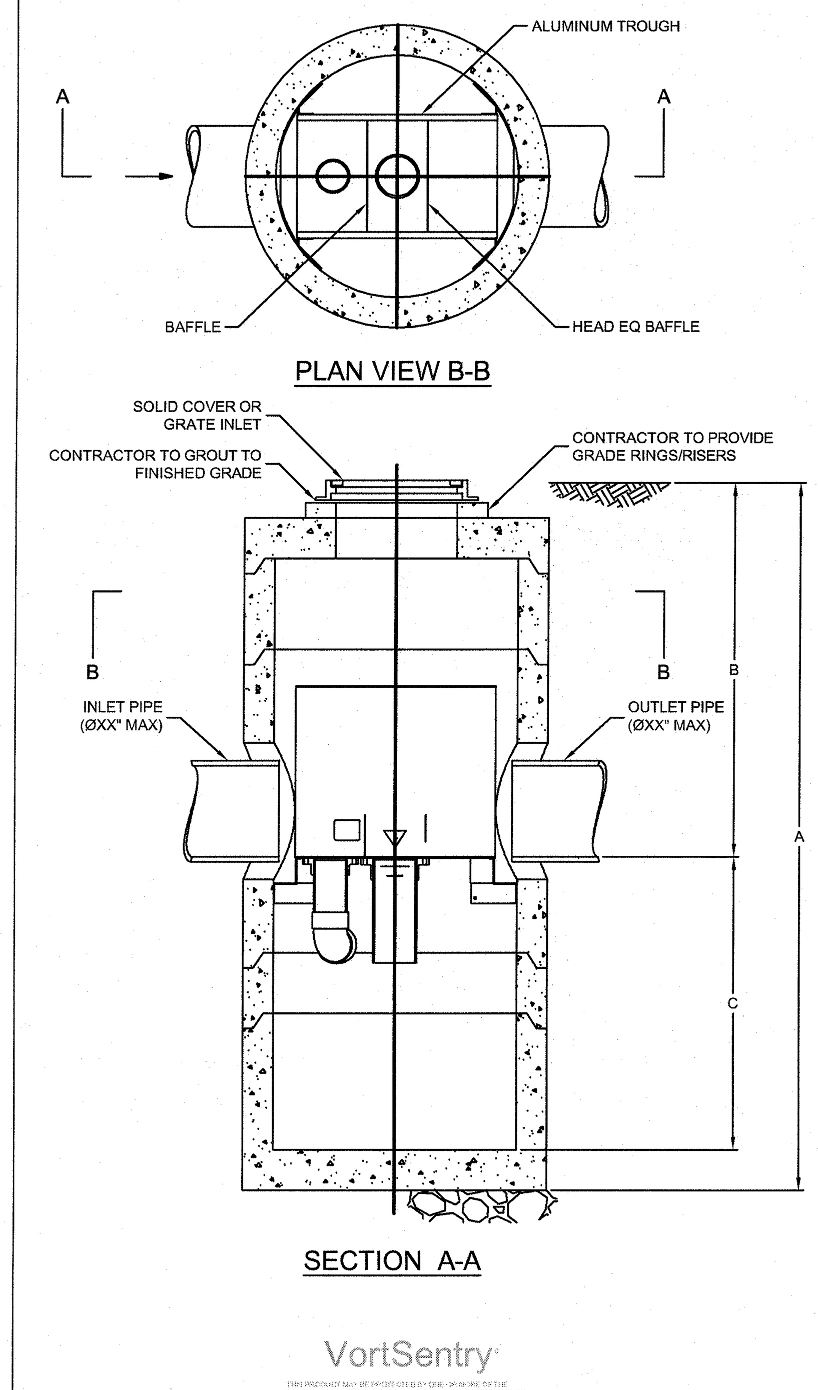

VORTSENTRY HS DESIGN NOTES

VSHS RATED TREATMENT CAPACITY IS SHOWN IN THE TABLE BELOW, OR PER LOCAL REGULATIONS. MAXIMUM HYDRAULIC INTERNAL BYPASS CAPACITY VARIES. CONTACT YOUR CONTECH REPRESENTATIVE FOR ADITIONAL INFORMATION.

THE STANDARD SOLID COVER CONFIGURATION IS SHOWN. ALTERNATE CONFIGURATIONS ARE AVAILABLE AND ARE LISTED BELOW.

	CONFIGURATION OPTION DESCRIPTION
	GRATE INLET (NO INLET PIPE)
	GRATE INLET WITH INLET PIPE

VORTSENTRY HS GENERAL INFORMATION

Model	Manhole Diameter (ID)		Total Treatment Flow Rate		Typical Total Distance Rim to Outside Bottom A		Typical Distance Rim to Invert B		Typical Depth Below Invert (inside) C		Approximate Minimum Distance Rim to Invert		Maximum Pipe Diameter (ID)	
	FT	mm	CFS	L/S	FT	m	FT	m	FT	mm	FT	m	IN	mm
HS36	3	900	0.55	15.6	10.16	3.10	4.08	1.24	5.58	1702	3.00	0.91	18	450
HS48	4	1200	1.20	34.0	13.25	4.04	6.00	1.83	6.75	2057	4.00	1.22	24	600
HS60	5	1500	2.20	62.3	15.13	4.61	6.50	1.98	7.96	2426	4.82	1.47	30	750
HS72	6	1800	3.70	104.8	16.56	5.05	6.75	2.06	9.15	2788	5.59	1.70	36	900
HS84	7	2100	5.60	158.6	18.85	5.75	7.75	2.36	10.35	3156	5.00	1.52	42	1050
HS96	8	2400	8.10	229.4	20.87	6.36	8.50	2.59	11.54	3518	6.91	2.11	48	1200

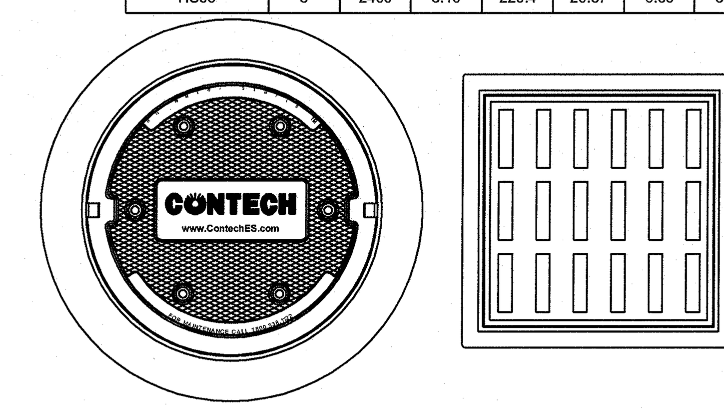

FRAME AND COVER
(DIAMETER VARIES)
N.T.S.

FRAME AND GRATE
(24" SQUARE)
N.T.S.

SITE SPECIFIC DATA REQUIREMENTS

STRUCTURE ID			
WATER QUALITY FLOW RATE (CFS)			
PEAK FLOW RATE (CFS)			
RETURN PERIOD OF PEAK FLOW (YRS)			
PIPE DATA:	I.E.	MATERIAL	DIAMETER
INLET PIPE 1			
OUTLET PIPE			
RIM ELEVATION			
ANTI-FLOTATION BALLAST		WIDTH	HEIGHT
NOTES/SPECIAL REQUIREMENTS:			

* PER ENGINEER OF RECORD

GENERAL NOTES
1. CONTECH TO PROVIDE ALL MATERIALS UNLESS NOTED OTHERWISE.
2. DIMENSIONS MARKED WITH ( ) ARE REFERENCE DIMENSIONS. ACTUAL DIMENSIONS MAY VARY.
3. FOR FABRICATION DRAWINGS WITH DETAILED STRUCTURE DIMENSIONS AND WEIGHT, PLEASE CONTACT YOUR CONTECH ENGINEERED SOLUTIONS LLC REPRESENTATIVE. www.ContechES.com
4. VORTSENTRY HS WATER QUALITY STRUCTURE SHALL BE IN ACCORDANCE WITH ALL DESIGN DATA AND INFORMATION CONTAINED IN THIS DRAWING.
5. STRUCTURE SHALL MEET AASHTO HS20 AND CASTINGS SHALL MEET AASHTO M306 LOAD RATING, ASSUMING GROUNDWATER ELEVATION AT, OR BELOW, THE OUTLET PIPE INVERT ELEVATION. ENGINEER OF RECORD TO CONFIRM ACTUAL GROUNDWATER ELEVATION.

INSTALLATION NOTES
1. ANY SUB-BASE, BACKFILL DEPTH, AND/OR ANTI-FLOTATION PROVISIONS ARE SITE-SPECIFIC DESIGN CONSIDERATIONS AND SHALL BE SPECIFIED BY ENGINEER OF RECORD.
2. CONTRACTOR TO PROVIDE EQUIPMENT WITH SUFFICIENT LIFTING AND REACH CAPACITY TO LIFT AND SET THE VORTSENTRY HS MANHOLE STRUCTURE (LIFTING CLUTCHES PROVIDED).
3. CONTRACTOR TO INSTALL JOINT SEALANT BETWEEN ALL STRUCTURE SECTIONS AND ASSEMBLE STRUCTURE.
4. CONTRACTOR TO PROVIDE, INSTALL, AND GROUT PIPES. MATCH PIPE INVERTS WITH ELEVATIONS SHOWN.
5. CONTRACTOR TO TAKE APPROPRIATE MEASURES TO ASSURE UNIT IS WATER TIGHT, HOLDING WATER TO FLOWLINE INVERT MINIMUM. IT IS SUGGESTED THAT ALL JOINTS BELOW PIPE INVERTS ARE GROUTED.

CONTECH ENGINEERED SOLUTIONS LLC
www.ContechES.com
9025 Centre Pointe Dr., Suite 400, West Chester, OH 45069
800-338-1122 513-645-7000 513-645-7993 FAX

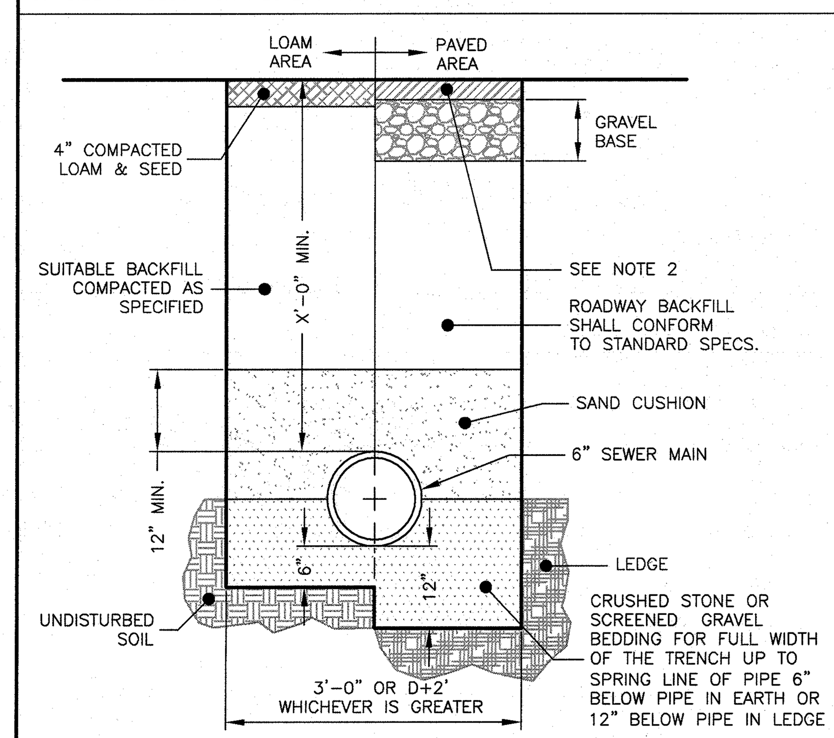

SEWER TRENCH
NOT TO SCALE

NOTES:
1. ALL MATERIAL SHALL CONFORM TO CITY/TOWN OF DEPARTMENT OF PUBLIC WORKS.
2. NEW ROADWAY CONSTRUCTION SHALL CONFORM TO CITY/TOWN SPECIFICATIONS.
3. IN LIEU OF THE 12" GRAVEL COURSE AND 9" OF CRUSHED GRAVEL, 18" OF CRUSHED GRAVEL OR RECLAIMED STABILIZED BASE MAY BE USED AS A BASE FOR THE PAVEMENT REPAIR.
4. MATERIAL SHALL BE REPLACED IN KIND WHENEVER POSSIBLE.
5. A MINIMUM 2' CUTBACK IS REQUIRED AT THE TOP OF THE TRENCH WALL OVER UNDISTURBED MATERIAL.

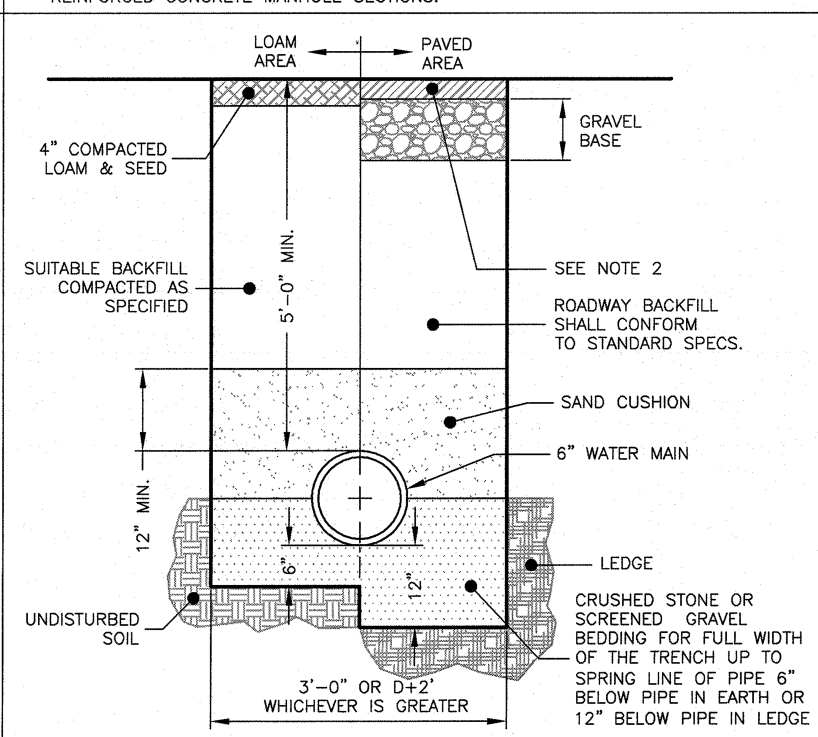

WATER TRENCH
NOT TO SCALE

NOTES:
1. ALL MATERIAL SHALL CONFORM TO CITY/TOWN OF DEPARTMENT OF PUBLIC WORKS.
2. NEW ROADWAY CONSTRUCTION SHALL CONFORM TO CITY/TOWN SPECIFICATIONS.
3. IN LIEU OF THE 12" GRAVEL COURSE AND 9" OF CRUSHED GRAVEL, 18" OF CRUSHED GRAVEL OR RECLAIMED STABILIZED BASE MAY BE USED AS A BASE FOR THE PAVEMENT REPAIR.
4. MATERIAL SHALL BE REPLACED IN KIND WHENEVER POSSIBLE.
5. A MINIMUM 2' CUTBACK IS REQUIRED AT THE TOP OF THE TRENCH WALL OVER UNDISTURBED MATERIAL.

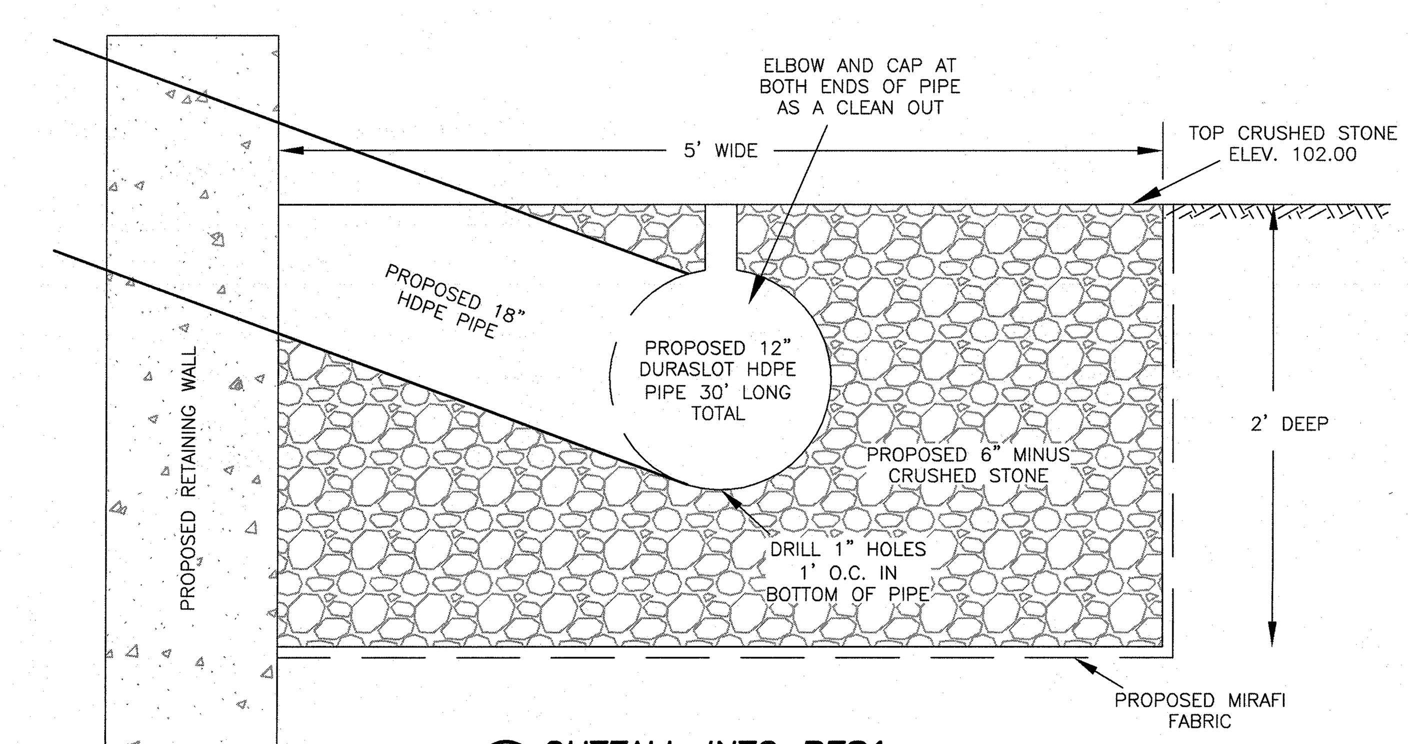

OUTFALL INTO RES1
NOT TO SCALE

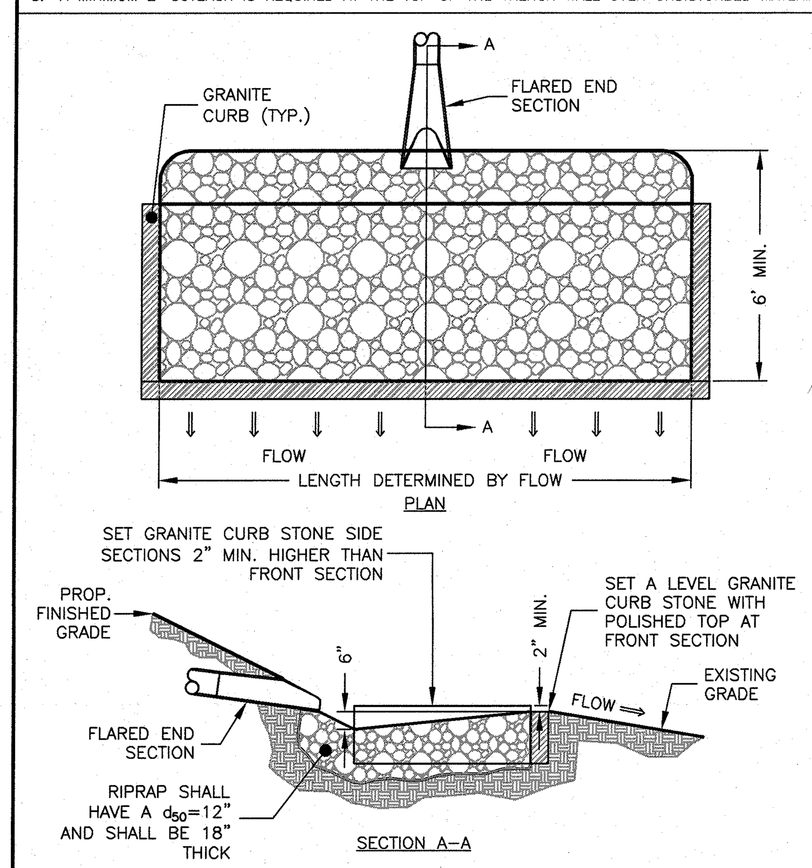

LEVEL SPREADER
NOT TO SCALE

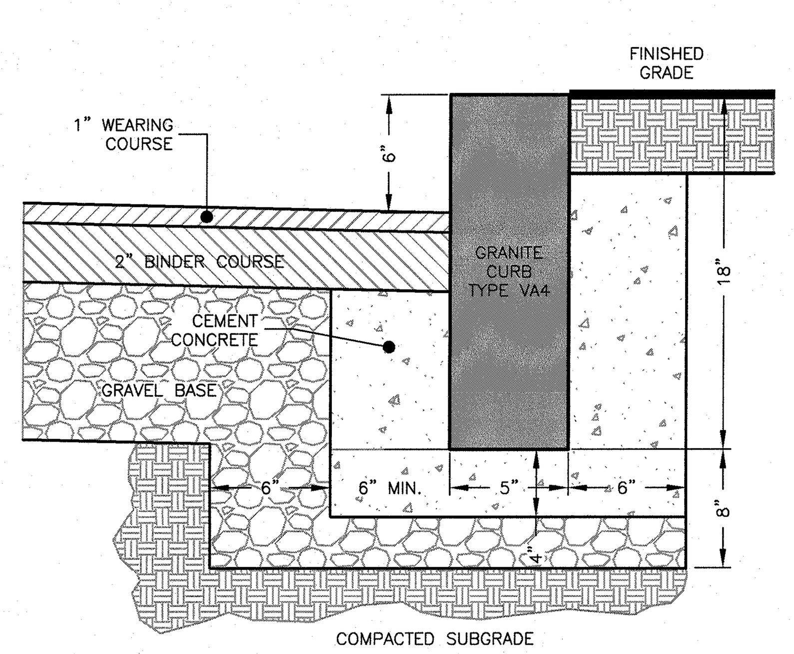

VERTICAL GRANITE CURB
NOT TO SCALE

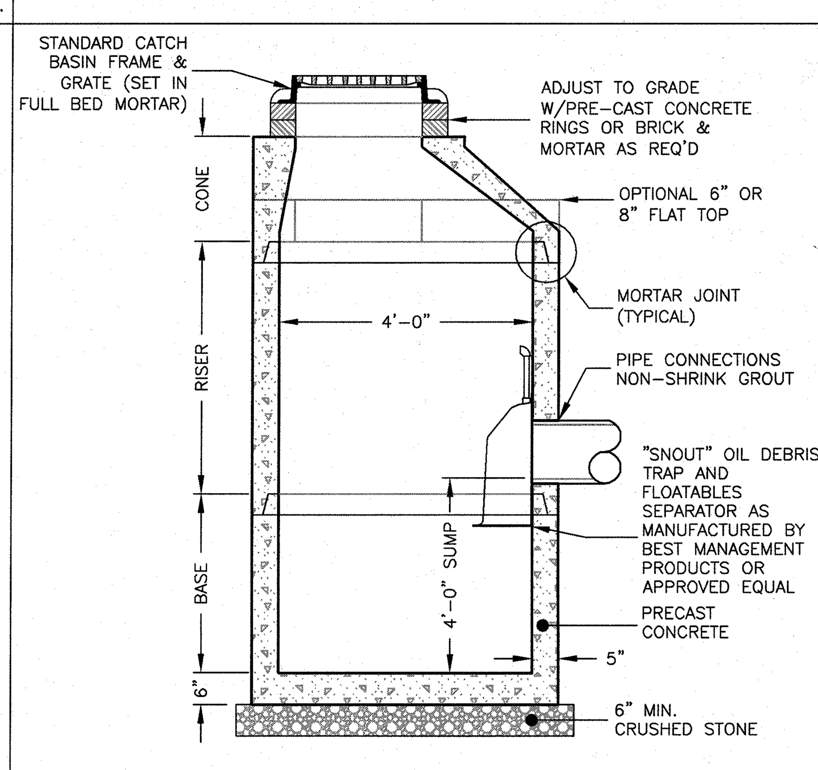

PRE-CAST CATCH BASIN
NOT TO SCALE

NOTES:
1. CONCRETE: 4,000 PSI MINIMUM AFTER 28 DAYS.
2. REINFORCED STEEL CONFORMS TO LATEST ASTM A185 SPEC. 0.12 SQ. IN./LINEAL FT. AND 0.12 SQ. IN. (BOTH WAYS) BASE BOTTOM.
3. H-20 DESIGN LOADING PER AASHTO HS-20-44; ASTM C478 SPEC FOR "PRECAST REINFORCED CONCRETE MANHOLE SECTIONS."

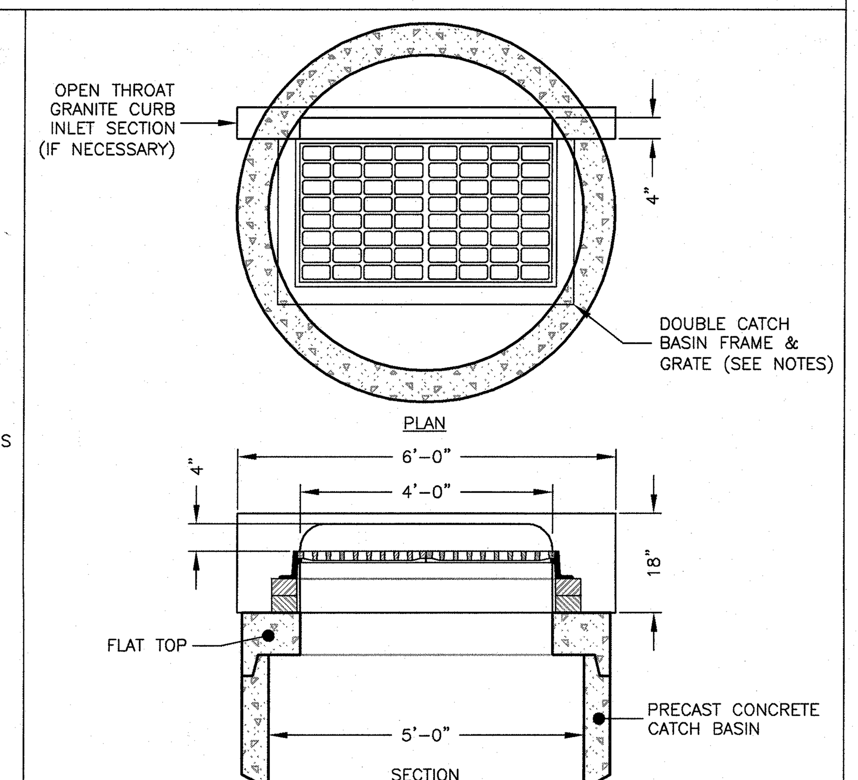

DOUBLE FRAME & GRATE
NOT TO SCALE

NOTES:
1. ON SLOPES USE LEBARON LV2448-2-000 FRAME W/LEBARON LK120D-300 3 FLANGE CASCADE GRATE OR APPROVED EQUAL.
2. AT LOW POINTS USE LEBARON LV2448-2-000 FRAME W/LEBARON LF248-2-000 3 FLANGE GRATE OR APPROVED EQUAL.

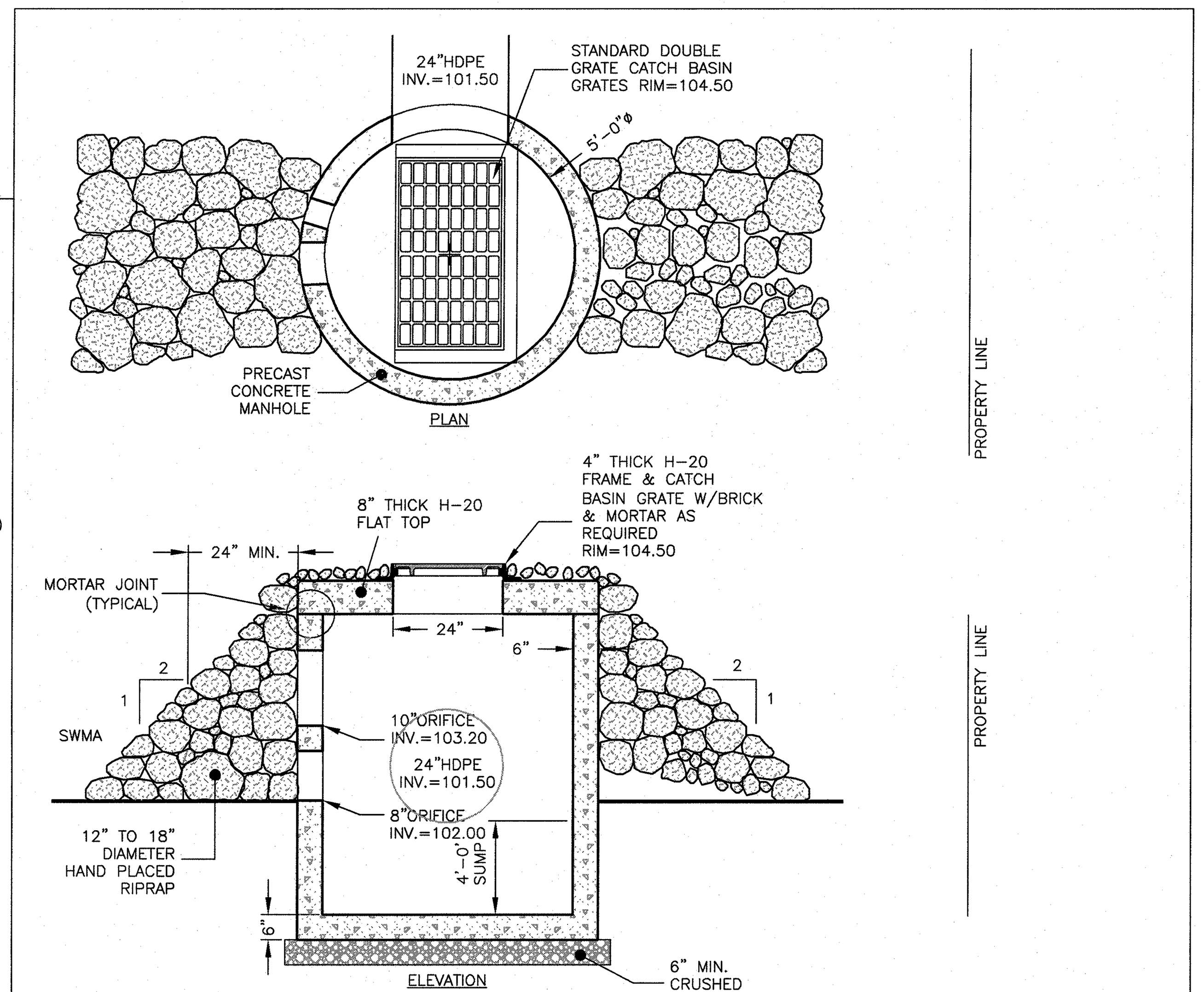

OUTLET CONTROL STRUCTURE
NOT TO SCALE

Prepared For:
Applicant
CONNOLLY BROTHERS, INC.
152 CONANT STREET
BEVERLY, MA 01915-1659

Prepared By:
Hayes Engineering, Inc.
603 Salem Street
Wakefield, MA 01880
Ph: 781.246.2800
Fax: 781.246.7596
www.hayeseng.com

Seal:
COMMONWEALTH OF MASSACHUSETTS
PETER J. OGREN
CIVIL
REGISTERED PROFESSIONAL ENGINEER

Design By: EBL
Drawn By: EBL
Checked By: PJO
Project File: BEV-0171A
Comp. No: BEV98
☒ Issued For Permit
☐ Issued For Review
☐ Issued For Bid
☐ Issued For Construction
☒ Not For Construction

No.	Revision	Date
1	City Comments	4-12-2016
2	Outlet Control Structure	4-19-2016
3		
4		
5		
6		
7		
8		
9		
10		

Scale: 1"=20'
0' 10' 20' 40'
Date: March 3, 2016

Drawing Title:
DETAIL SHEET
HIGH RES BIOSOLUTIONS
#102 CHERRY HILL DRIVE
BEVERLY, MASS.

Drawing No.:
DET
SHEET 3 OF 3

M:\BEV98\SP102cherryhillR6.dwg, 4/22/2016 11:40:32 AM, TC

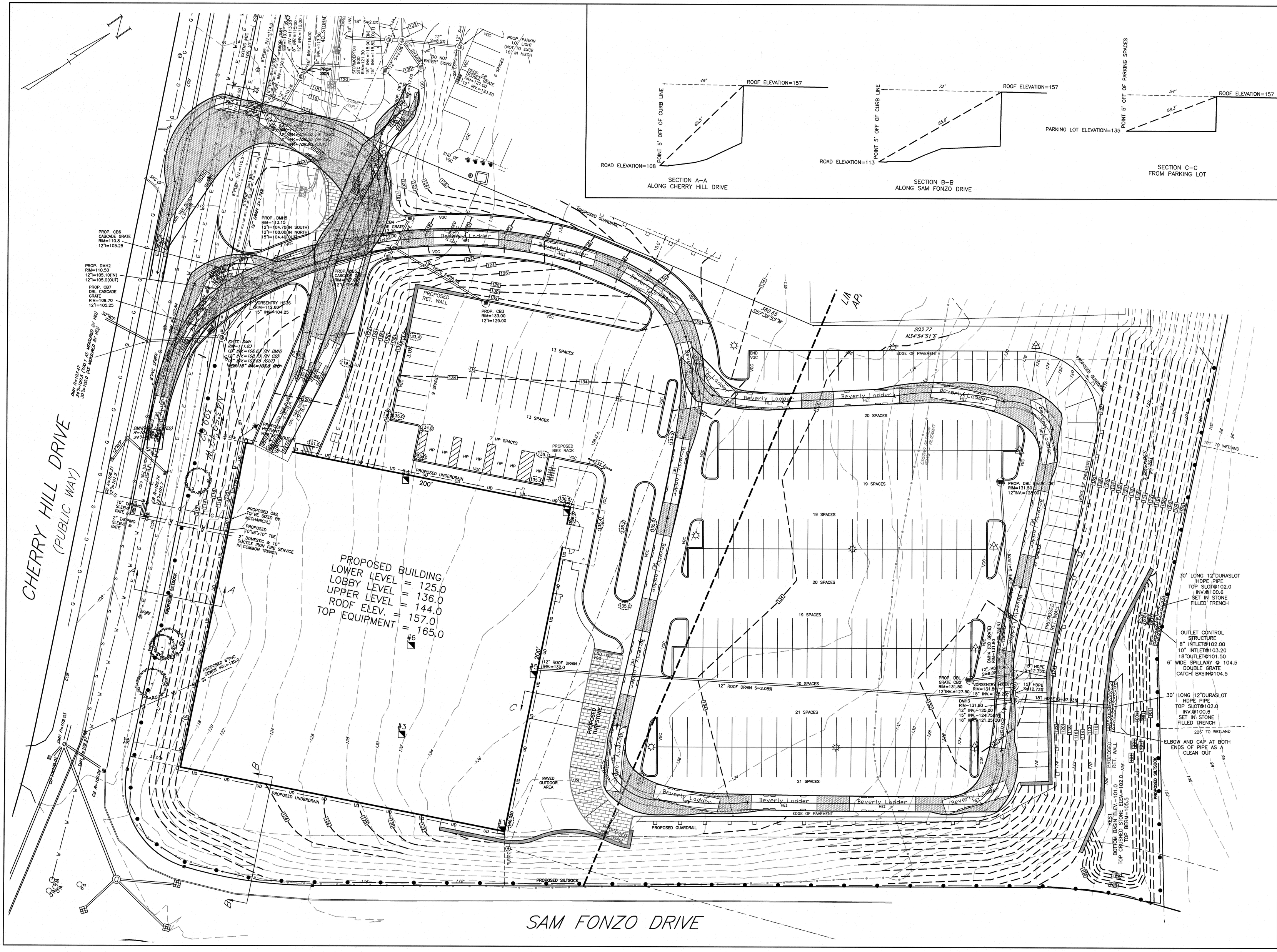

Prepared For:

Applicant
CONNOLLY BROTHERS, INC.
152 CONANT STREET
BEVERLY, MA 01915-1659

Prepared By:

Hayes Engineering, Inc.
603 Salem Street
Wakefield, MA 01880
Ph: 781.246.2800
Fax: 781.246.7596
www.hayeseng.com

Seal:

PETER J. OGREN REGISTERED PROFESSIONAL ENGINEER

Design By: EBL
Drawn By: EBL
Checked By: PJO
Project File: BEV-0171A
Comp. No: BEV98

- ☒ Issued For Permit
- ☐ Issued For Review
- ☐ Issued For Bid
- ☐ Issued For Construction
- ☒ Not For Construction

No.	Revision	Date
1	Outlet Control Structure	4-19-2016
2		
3		
4		
5		
6		
7		
8		
9		
10		

Scale: 1"=20'
0' 10' 20' 40'

Date: April 12, 2016

Drawing Title:

ACCESS PLAN
HIGH RES BIOSOLUTIONS
#102 CHERRY HILL DRIVE
BEVERLY, MASS.

Drawing No.:

AC

M:\BEV98\SP102cherryhillR6.dwg, 4/22/2016 11:41:09 AM, TC

Existing Watershed Plan in
BEVERLY, MASS.

Hayes Engineering, Inc.
Civil Engineers & Land Surveyors
603 Salem Street
Wakefield, MA 01880

Telephone: 781.246.2800
Facsimile: 781.246.7596
www.hayeseng.com

Scale: 1" = 40'

0' 20' 40' 80' 120'

February 12, 2016
Rev: 4-12-2016

#102 Cherry Hill Drive

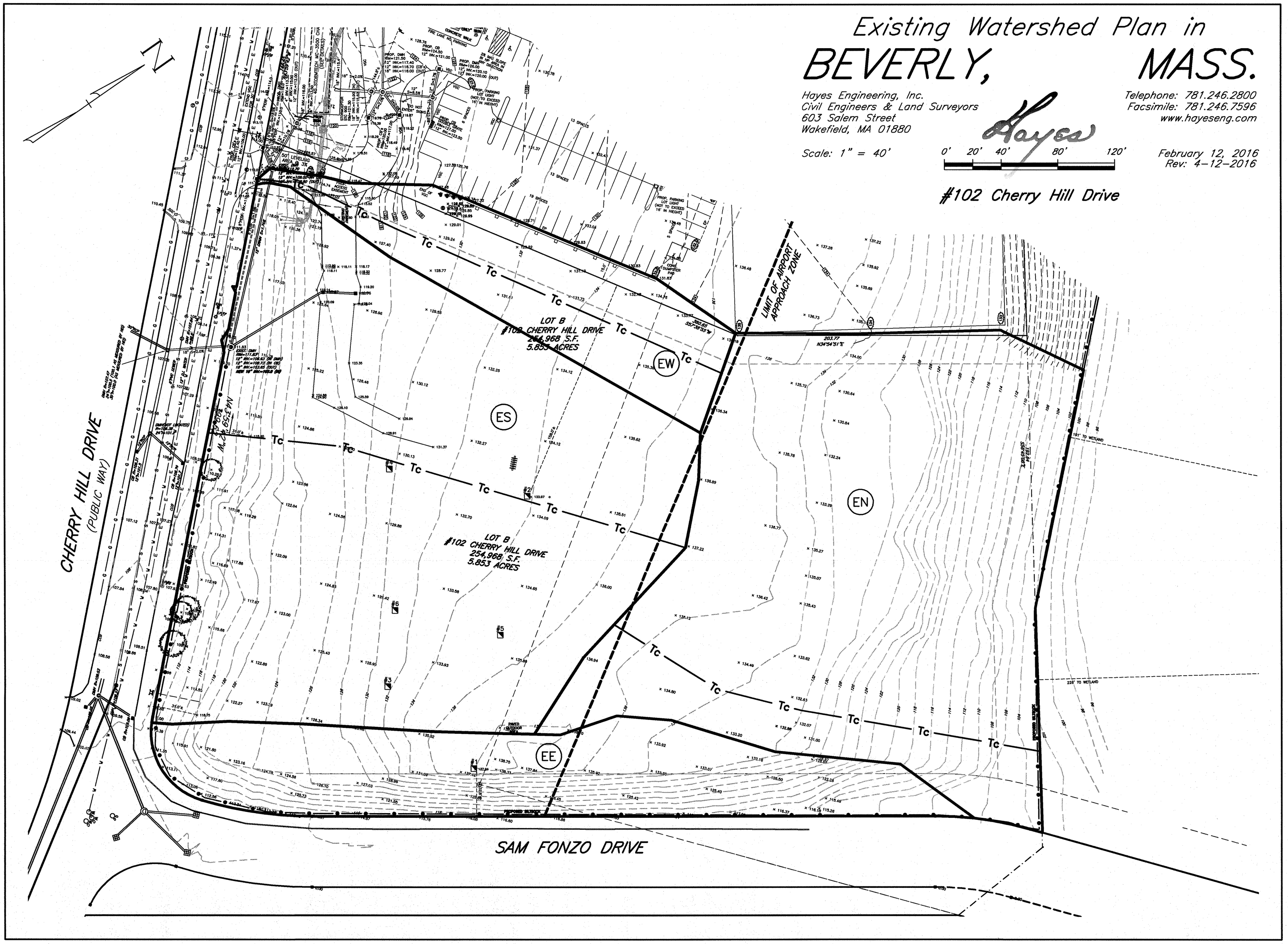

M:\BEV98\SP102cherryhillR5.dwg, 4/13/2016 6:53:13 AM, EBL