NOTES:

PERIMETER INFORMATION TAKEN FROM A PLAN ENTITLED "PLAN OF LAND IN BEVERLY, MASS." BY THE RUSSELL A. WHEATLEY CO., INC. DATED JULY 16, 1992 RECORDED AT THE ESSEX SOUTH REGISTRY OF DEEDS AS PLAN BOOK 278 PLAN 40.

EXISTING TOPOGRAPHIC INFORMATION PROVIDED BY OTHERS.

PROPERTY NOT IN A FLOOD HAZARD AREA (ZONE A OR V) AS SHOWN ON FLOOD INSURANCE RATE MAP NUMBER 25009C0408F; EFFECTIVE DATE JULY 3, 2012.

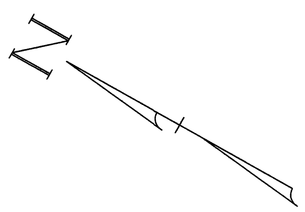

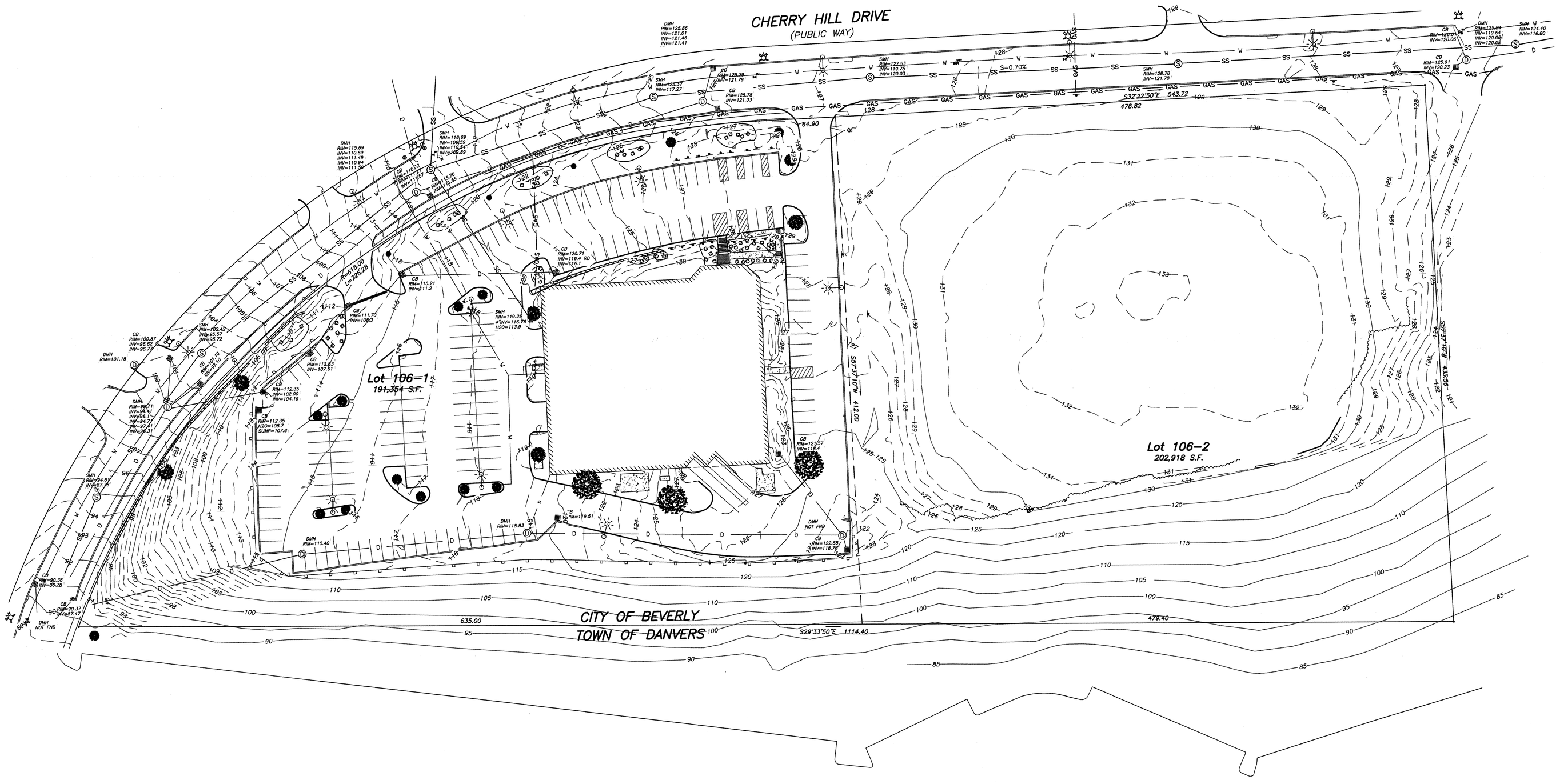

Prepared For:

Applicant
Krohne, Inc.
7 Dearborn Road
Peabody, MA 01960

Prepared By:

Hayes Engineering, Inc.
603 Salem Street
Wakefield, MA 01880
Ph: 781 246 7596
Fax: 781 246 7596
www.hayeseng.com

Seal:

Design By: EBL
Drawn By: EBL
Checked By: PJO
Project File: BEV-0183
Comp. No: BEV105

- ☒ Issued For Permit
- ☐ Issued For Review
- ☐ Issued For Bid
- ☐ Issued For Construction
- ☒ Not For Construction

No.	Revision	Date
1		
2		
3		
4		
5		
6		
7		
8		
9		
10		

Scale: 1"=40'
0' 20' 40' 80'

Date: August 9, 2016

Drawing Title:

EXISTING CONDITIONS
KROHNE, INC.
#55 CHERRY HILL DRIVE
BEVERLY, MASS.

Drawing No.:

C1

SHEET 1 OF 4

M:\bev105\SPS5cherryhill.dwg, 8/23/2016 12:45:26 PM, EBL

NOTES:

PERIMETER INFORMATION TAKEN FROM A PLAN ENTITLED "PLAN OF LAND IN BEVERLY, MASS." BY THE RUSSELL A. WHEATLEY CO., INC. DATED JULY 16, 1992 RECOREDED AT THE ESSEX SOUTH REGISTRY OF DEEDS AS PLAN BOOK 278 PLAN 40.

EXISTING TOPOGRAPHIC INFORMATION PROVIDED BY OTHERS.

PROPERTY NOT IN A FLOOD HAZARD AREA (ZONE A OR V) AS SHOWN ON FLOOD INSURANCE RATE MAP NUMBER 25009C0408F; EFFECTIVE DATE JULY 3, 2012.

VERIFY EXISTING CATCH BASINS HAVE HOODS ON THE OUTLETS. INSTALL HOODS IF NECESSARY.

PROTECT EXISTING CATCH BASINS WITH SILTSACKS.

ZONING TABLE		
ZONE	IR (RESTRICTED INDUSTRIAL)	
DIMENSIONAL CONTROLS	REQUIRED/ALLOWED	PROPOSED
FRONT YARD SETBACK	30 ft.	31.0± ft.
SIDE YARD SETBACK	20 ft.	45.8± ft.
REAR YARD SETBACK	25 ft.	182.7± ft.
MIN. FRONTAGE	225 ft.	1,270 ft.
MIN. LOT AREA	2 acres	9.05 acres
MAX. BUILDING HEIGHT	60 ft.	30± ft.
MAX. LOT COVERAGE (bldgs.)	40%	18.70%
MAX. LOT COVERAGE (bldgs./paving)	60%	44.46%
PARKING PROVIDED		175 Spaces

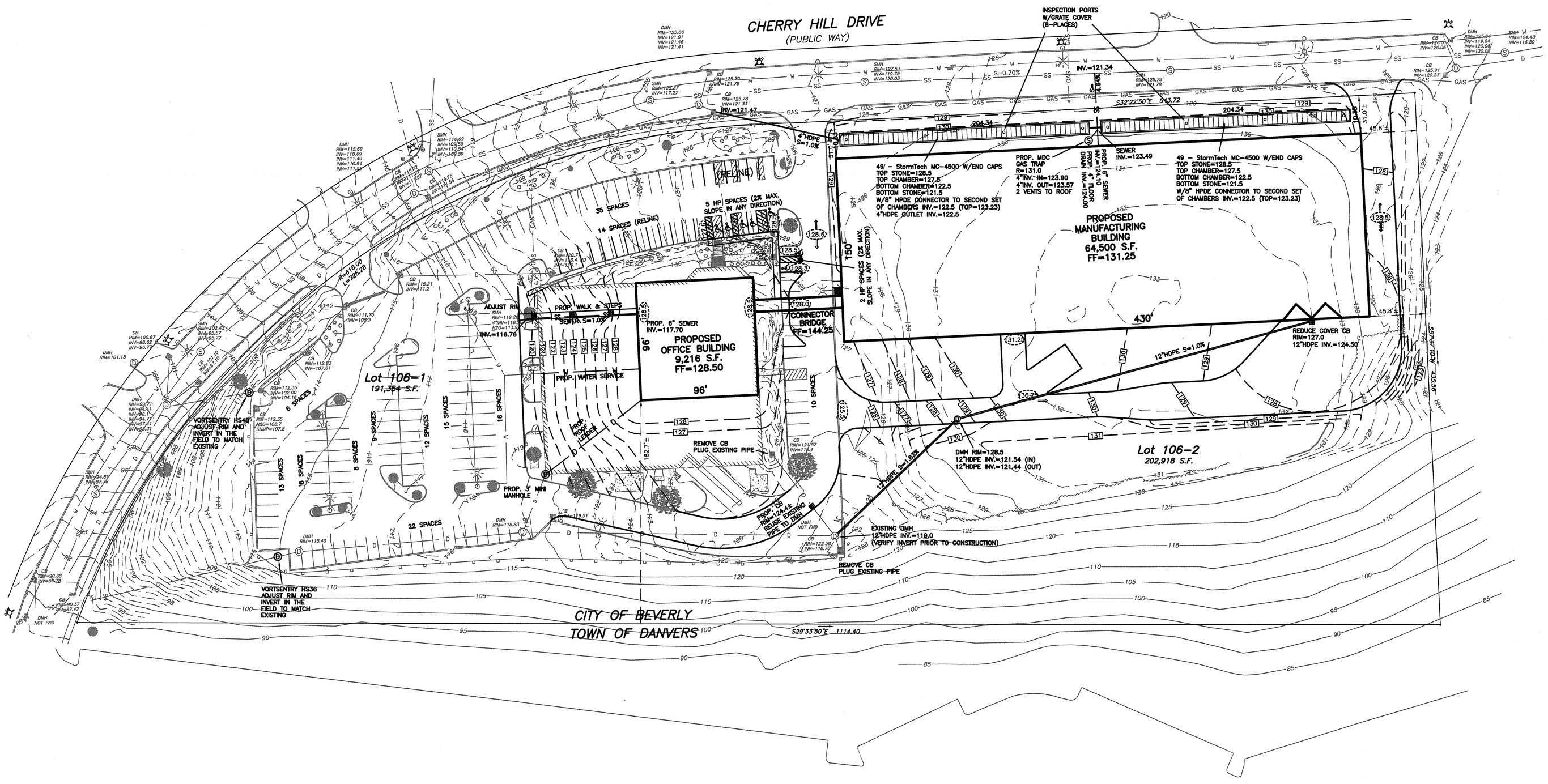

Prepared For:

Applicant
Krohne, Inc.
7 Dearborn Road
Peabody, MA 01960

Prepared By:

Hayes Engineering, Inc.
803 Salem Street
Wakefield, MA 01880
Ph: 781-246-2800
Fax: 781-246-2806
www.hayesengineering.com

Seal:

COMMONWEALTH OF MASSACHUSETTS
ERIC B. LANE
CIVIL
No. 43469
REGISTERED PROFESSIONAL ENGINEER

8-23-2016

Design By: EBL
Drawn By: EBL
Checked By: PJO
Project File: BEV-0183
Comp. No: BEV105

- [x] Issued For Permit
- [ ] Issued For Review
- [ ] Issued For Bid
- [ ] Issued For Construction
- [x] Not For Construction

No.	Revision	Date
1		
2		
3		
4		
5		
6		
7		
8		
9		
10		

Scale: 1"=40'
0' 20' 40' 80'

Date: August 9, 2016

Drawing Title:

SITE GRADING PLAN
KROHNE, INC.
#55 CHERRY HILL DRIVE
BEVERLY, MASS.

Drawing No.:

C2

SHEET 2 OF 4

M:\Dev\105\SP55cherryhill.dwg, 8/23/2016 12:47:59 PM, EBL

LIGHTING LEGEND:

LUMINAIRE SCHEDULE

Symbol	Label	Qty	Catalog Number	Description	Lamp	File	LLF
⊠	TRP1	12	SPAULDING LIGHTING TRP-30L4K-035-4	SPAULDING LIGHTING TRP LED WALL PACK TYPE IV, 4000K	30 LED, MOUNTED AT 12' ON BUILDING, DARK SKY	wall-TRP-30LK4-034-4.ies	0.85
▫□	VPL1	6	BEACON PRODUCTS VP-L-64NB-136-3K-T4	BEACON PRODUCTS, VIPER L SERIES POLE MOUNT, TYPE IV, 4000K	64 LED, MOUNTED AT 30' ON POLE (SINGLE)	pole-VP-L-B4NB-136-3K-T4.ies	0.85
□▫□	VPL2	4	BEACON PRODUCTS VP-L-64NB-136-3K-T4	BEACON PRODUCTS, VIPER L SERIES POLE MOUNT, TYPE IV, 4000K	64 LED, MOUNTED AT 30' ON POLE (DUAL)	pole-VP-L-B4NB-136-3K-T4.ies	0.85

2.0 – DENOTES FOOT CANDLE VALUE AT GROUND LEVEL

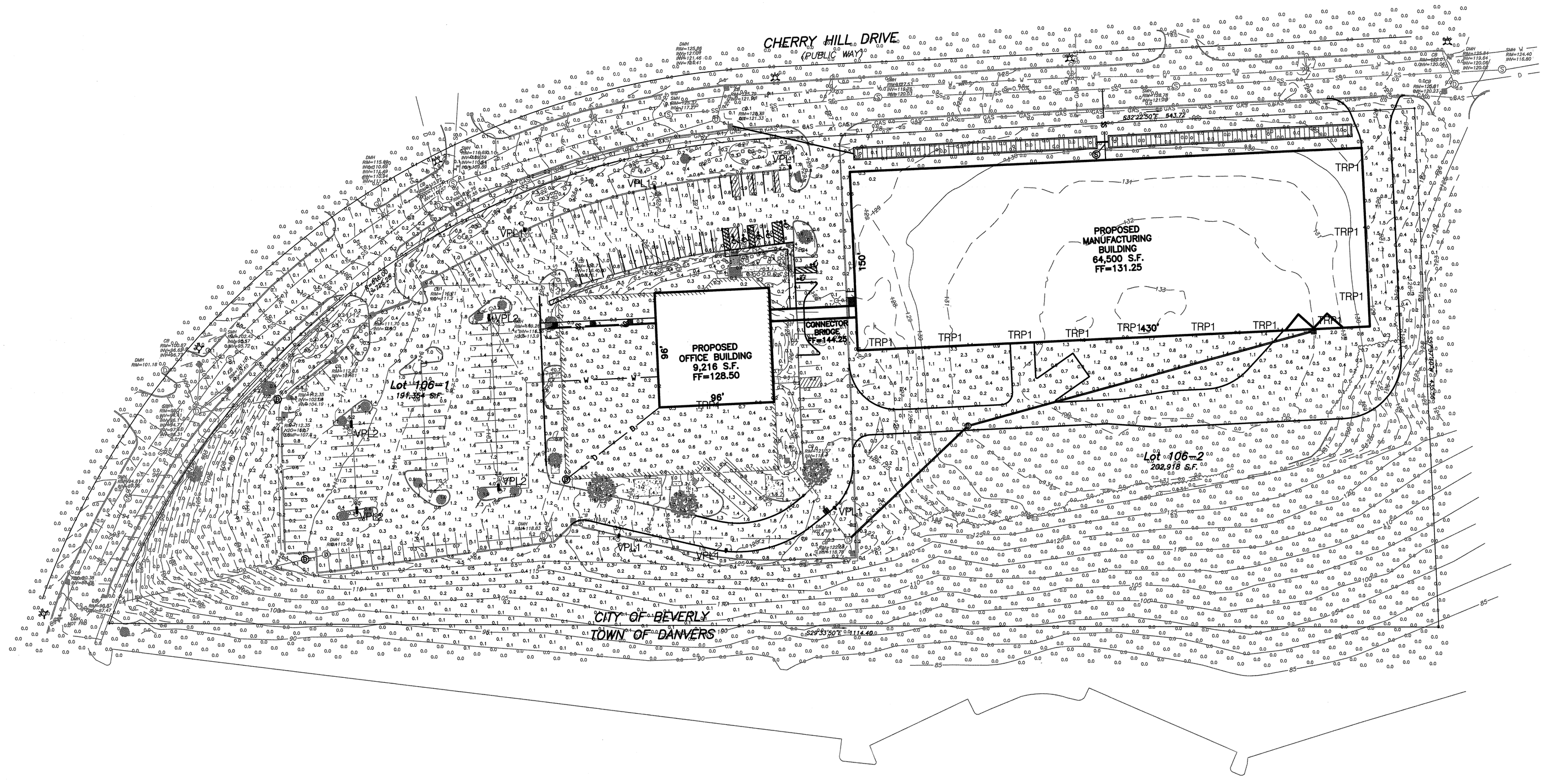

Prepared For:

Applicant
Krohne, Inc.
7 Dearborn Road
Peabody, MA 01960

Prepared By:

Hayes Engineering, Inc.
603 Salem Street
Wakefield, MA 01880
Ph: 781.246.2800
Fax: 781.246.7596
www.hayeseng.com

Seal:

Design By: EBL
Drawn By: EBL
Checked By: PJO
Project File: BEV-0183
Comp. No: BEV105
☒ Issued For Permit
☐ Issued For Review
☐ Issued For Bid
☐ Issued For Construction
☒ Not For Construction

No.	Revision	Date
10		
9		
8		
7		
6		
5		
4		
3		
2		
1		

Scale: 1"=40'
0' 20' 40' 80'
Date: August 9, 2016

Drawing Title:

SITE PHOTOMETRICS PLAN
KROHNE, INC.
#55 CHERRY HILL DRIVE
BEVERLY, MASS.

Drawing No.:

C3

SHEET 3 OF 4

M:\bev105\SPS\Cherryhill.dwg, 8/23/2016 12:48:33 PM, EBL

ACCEPTABLE FILL MATERIALS: STORMTECH MC-4500 CHAMBER SYSTEMS

	MATERIAL LOCATION	DESCRIPTION	AASHTO MATERIAL CLASSIFICATIONS	COMPACTION / DENSITY REQUIREMENT
D	**FINAL FILL:** FILL MATERIAL FOR LAYER 'D' STARTS FROM THE TOP OF THE 'C' LAYER TO THE BOTTOM OF FLEXIBLE PAVEMENT OR UNPAVED FINISHED GRADE ABOVE. NOTE THAT PAVEMENT SUBBASE MAY BE PART OF THE 'D' LAYER	ANY SOIL/ROCK MATERIALS, NATIVE SOILS, OR PER ENGINEER'S PLANS. CHECK PLANS FOR PAVEMENT SUBGRADE REQUIREMENTS.	N/A	PREPARE PER SITE DESIGN ENGINEER'S PLANS. PAVED INSTALLATIONS MAY HAVE STRINGENT MATERIAL AND PREPARATION REQUIREMENTS.
C	**INITIAL FILL:** FILL MATERIAL FOR LAYER 'C' STARTS FROM THE TOP OF THE EMBEDMENT STONE ('B' LAYER) TO 24" (600 mm) ABOVE THE TOP OF THE CHAMBER. NOTE THAT PAVEMENT SUBBASE MAY BE A PART OF THE 'C' LAYER.	GRANULAR WELL-GRADED SOIL/AGGREGATE MIXTURES, <35% FINES OR PROCESSED AGGREGATE. MOST PAVEMENT SUBBASE MATERIALS CAN BE USED IN LIEU OF THIS LAYER.	AASHTO M145¹ A-1, A-2-4, A-3 OR AASHTO M43¹ 3, 357, 4, 467, 5, 56, 57, 6, 67, 68, 7, 78, 8, 89, 9, 10	BEGIN COMPACTIONS AFTER 24" (600 mm) OF MATERIAL OVER THE CHAMBERS IS REACHED. COMPACT ADDITIONAL LAYERS IN 12" (300 mm) MAX LIFTS TO A MIN. 95% PROCTOR DENSITY FOR WELL GRADED MATERIAL AND 95% RELATIVE DENSITY FOR PROCESSED AGGREGATE MATERIALS.
B	**EMBEDMENT STONE:** FILL SURROUNDING THE CHAMBERS FROM THE FOUNDATION STONE ('A' LAYER) TO THE 'C' LAYER ABOVE.	CLEAN, CRUSHED, ANGULAR STONE	AASHTO M43¹ 3, 4	NO COMPACTION REQUIRED.
A	**FOUNDATION STONE:** FILL BELOW CHAMBERS FROM THE SUBGRADE UP TO THE FOOT (BOTTOM) OF THE CHAMBER.	CLEAN, CRUSHED, ANGULAR STONE	AASHTO M43¹ 3, 4	PLATE COMPACT OR ROLL TO ACHIEVE A FLAT SURFACE. ²³

PLEASE NOTE:
1. THE LISTED AASHTO DESIGNATIONS ARE FOR GRADATIONS ONLY. THE STONE MUST ALSO BE CLEAN, CRUSHED, ANGULAR. FOR EXAMPLE, A SPECIFICATION FOR #4 STONE WOULD STATE: "CLEAN, CRUSHED, ANGULAR NO. 4 (AASHTO M43) STONE".
2. STORMTECH COMPACTION REQUIREMENTS ARE MET FOR 'A' LOCATION MATERIALS WHEN PLACED AND COMPACTED IN 9" (230 mm) (MAX) LIFTS USING TWO FULL COVERAGES WITH A VIBRATORY COMPACTOR.
3. WHERE INFILTRATION SURFACES MAY BE COMPROMISED BY COMPACTION, FOR STANDARD DESIGN LOAD CONDITIONS, A FLAT SURFACE MAY BE ACHIEVED BY RAKING OR DRAGGING WITHOUT COMPACTION EQUIPMENT. FOR SPECIAL LOAD DESIGNS, CONTACT STORMTECH FOR COMPACTION REQUIREMENTS.

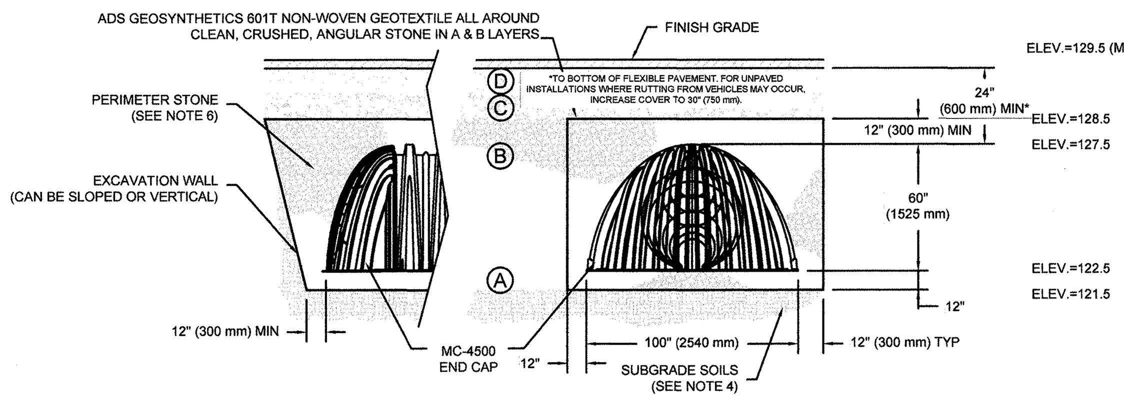

NOTES:

1. MC-4500 CHAMBERS SHALL CONFORM TO THE REQUIREMENTS OF ASTM F2418 "STANDARD SPECIFICATION FOR POLYPROPYLENE (PP) CORRUGATED WALL STORMWATER COLLECTION CHAMBERS".
2. MC-4500 CHAMBERS SHALL BE DESIGNED IN ACCORDANCE WITH ASTM F2787 "STANDARD PRACTICE FOR STRUCTURAL DESIGN OF THERMOPLASTIC CORRUGATED WALL STORMWATER COLLECTION CHAMBERS".
3. "ACCEPTABLE FILL MATERIALS" TABLE ABOVE PROVIDES MATERIAL LOCATIONS, DESCRIPTIONS, GRADATIONS, AND COMPACTION REQUIREMENTS FOR FOUNDATION, EMBEDMENT, AND FILL MATERIALS.
4. THE SITE DESIGN ENGINEER IS RESPONSIBLE FOR ASSESSING THE BEARING RESISTANCE (ALLOWABLE BEARING CAPACITY) OF THE SUBGRADE SOILS AND THE DEPTH OF FOUNDATION STONE WITH CONSIDERATION FOR THE RANGE OF EXPECTED SOIL MOISTURE CONDITIONS.
5. PERIMETER STONE MUST BE EXTENDED HORIZONTALLY TO THE EXCAVATION WALL FOR BOTH VERTICAL AND SLOPED EXCAVATION WALLS.
6. ONCE LAYER 'C' IS PLACED, ANY SOIL/MATERIAL CAN BE PLACED IN LAYER 'D' UP TO THE FINISHED GRADE. MOST PAVEMENT SUBBASE SOILS CAN BE USED TO REPLACE THE MATERIAL REQUIREMENTS OF LAYER 'C' OR 'D' AT THE SITE DESIGN ENGINEER'S DISCRETION.

ADS ADVANCED DRAINAGE SYSTEMS, INC. 4640 TRUEMAN BLVD HILLIARD, OH 43026 1-800-733-7473

StormTech® Detention · Retention · Water Quality

REV	DRW	CHK	DESCRIPTION

MC-4500 STANDARD CROSS SECTION
DATE: 11/18/14 DRAWN: JLM
PROJECT #: CHECKED: JLM
SHEET 1 OF 1

[redacted] THIS DRAWING HAS BEEN PREPARED BASED ON INFORMATION PROVIDED TO ADS UNDER THE DIRECTION OF THE SITE DESIGN ENGINEER OR OTHER PROJECT REPRESENTATIVE. THE SITE DESIGN ENGINEER SHALL REVIEW THIS DRAWING PRIOR TO CONSTRUCTION. IT IS THE ULTIMATE RESPONSIBILITY OF THE SITE DESIGN ENGINEER TO ENSURE THAT THE PRODUCT(S) DEPICTED AND ALL ASSOCIATED DETAILS MEET ALL APPLICABLE LAWS, REGULATIONS, AND PROJECT REQUIREMENTS.

INLET	A	B	D	INLET	A	B	D	INLET	A	B	D
4"	3'-0"	2'-6"	3'-6"	6"	5'-0"	4'-6"	4'-0"	8"	6'-0"	5'-0"	5'-0"
5"	5'-0"	4'-0"	3'-6"		4'-0"	3'-6"	4'-0"x4'-0"		4'-6"	4'-0"	5'-6"x5'-6"
	4'-0"	3'-0"	3'-6"x3'-6"		4'-0"	3'-6"	4'-6"		4'-0"	3'-6"	6'-0"
	3'-6"	3'-0"	4'-0"		3'-6"	3'-0"	4'-6"x4'-6"		3'-0"	2'-6"	6'-0"x6'-0"
	3'-0"	2'-6"	4'-0"x4'-0"		3'-6"	3'-0"	5'-0"		3'-6"	3'-0"	6'-6"
	3'-0"	2'-6"	4'-6"		3'-0"	2'-6"	5'-0"x5'-0"		3'-0"	2'-6"	6'-6"x6'-6"

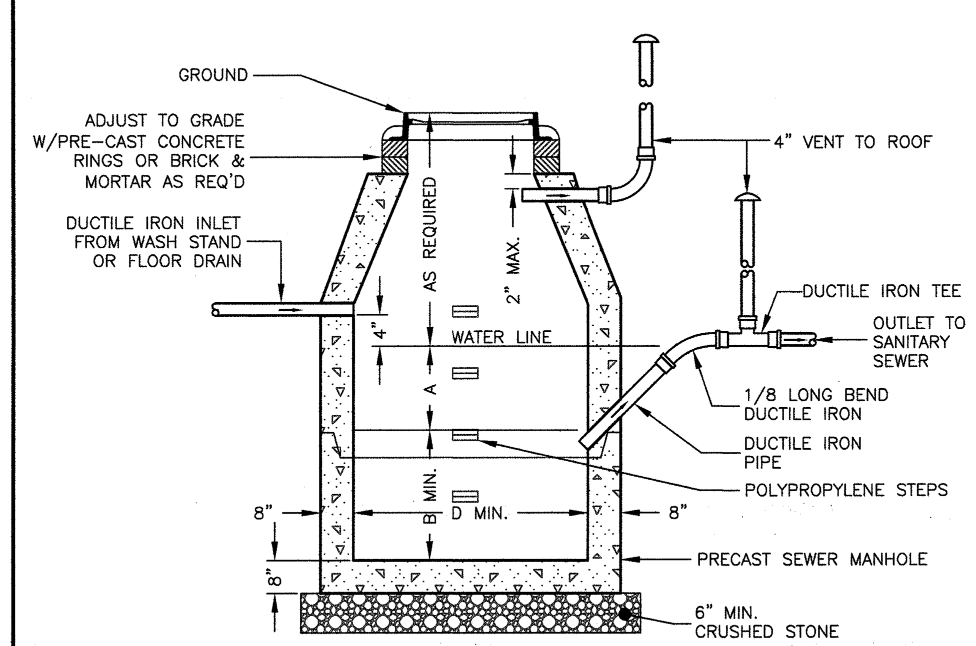

SEWER GAS TRAP
NOT TO SCALE

GENERAL CONSTRUCTION NOTES

1. MANHOLE TO BE LOCATED OUTSIDE OF BUILDING WHERE POSSIBLE, COVER TO HAVE A CENTER HOLE.
2. A TIGHT COVER MUST BE USED IF MANHOLE IS LOCATED INSIDE OF BUILDING.
3. OPENING SHALL BE NOT LESS THAN 24" DIA.
4. THE MANHOLE SHALL BE SO LOCATED AND CONSTRUCTED THAT SURFACE WATER SHALL BE EXCLUDED.
5. INLET PIPE SHALL BE AT LEAST FOUR INCHES ABOVE NORMAL WATER LINE.
6. WHERE SUBJECT TO FROST OR CRUSHING CONDITIONS, OUTLET SHALL BE AT LEAST THREE FEET BELOW THE SURFACE.
7. THE NEW MANHOLE MUST BE FILLED WITH CLEAN WATER BEFORE USING, AND AFTER BEING EMPTIED FOR PERIODIC CLEANING.
8. ALL OIL AND GASOLINE MUST BE REMOVED BEFORE CLEANING OUT THE MANHOLE, AND MUST NOT BE DISCHARGED INTO THE SEWER THROUGH OTHER FIXTURES.
9. SPECIFICATIONS FOR COVERING SPECIAL CASES OR CONDITIONS, SHALL BE APPROVED BY THE LOCAL AUTHORITIES, AND THE AUTHORITIES OF THE COMMONWEALTH OF MASSACHUSETTS.
10. POLYPROPYLENE STEPS SHALL BE SPACED ABOUT 18" APART.
11. BOTH VENTS SHALL BE EXTENDED INDEPENDENTLY INTERNAL TO THE BUILDING 18" ABOVE THE ROOF, OR AS APPROVED BY THE LOCAL AUTHORITIES, AND THE AUTHORITIES OF THE COMMONWEALTH OF MASSACHUSETTS.

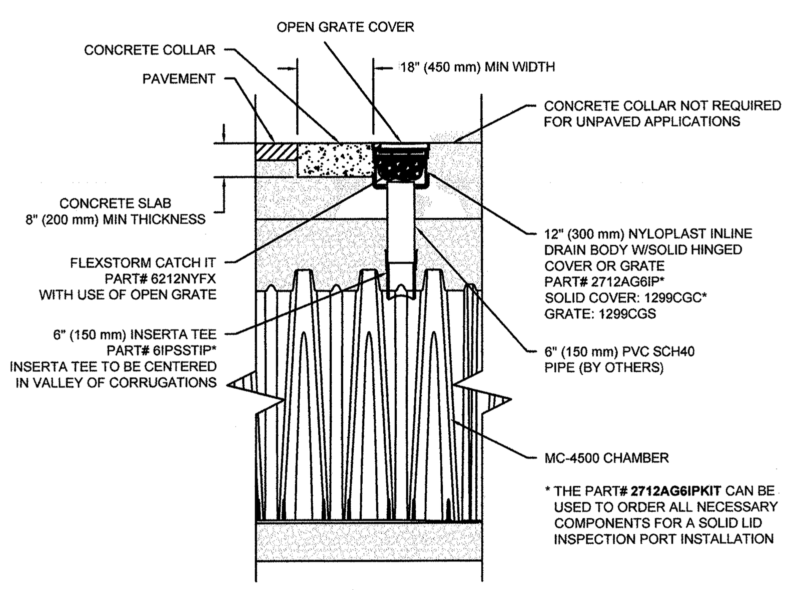

MC-4500 6" INSPECTION PORT DETAIL
NTS

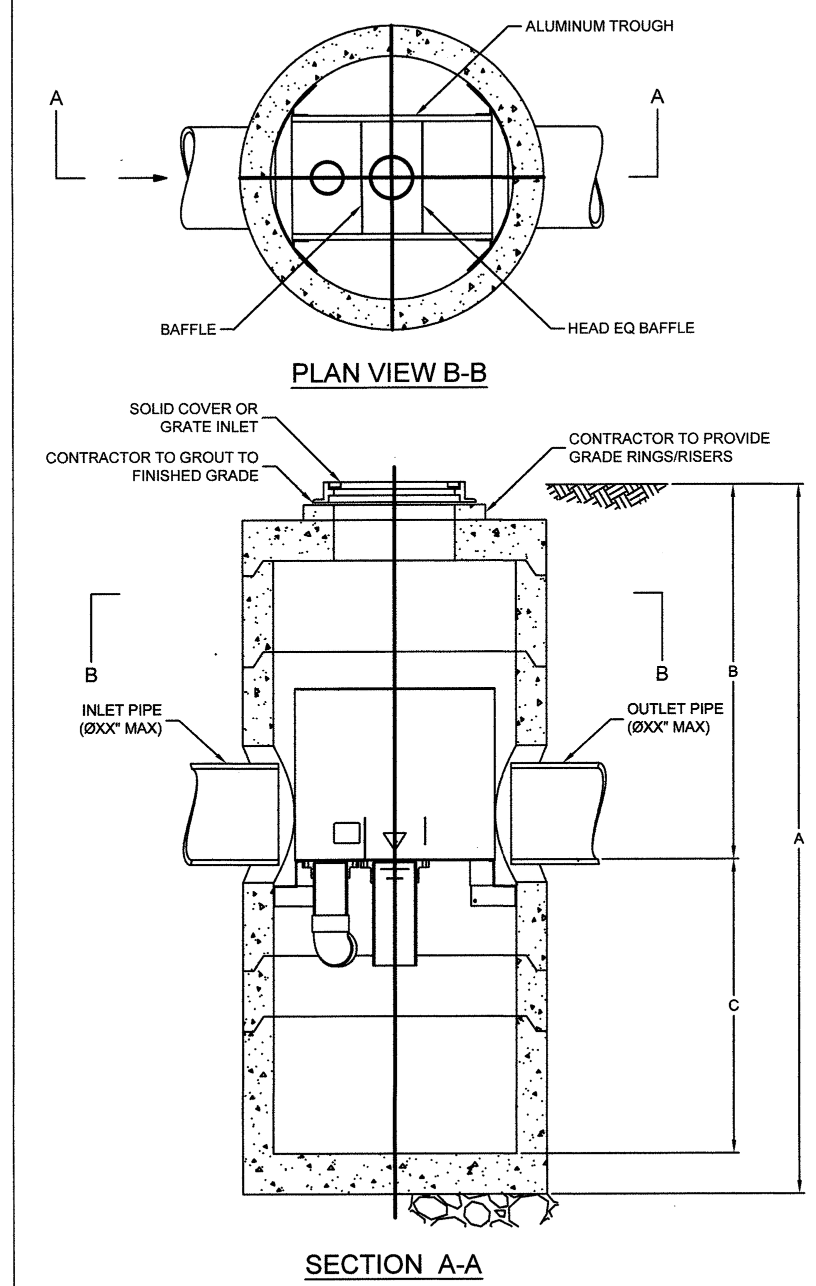

VORTSENTRY HS DESIGN NOTES

VSHS RATED TREATMENT CAPACITY IS SHOWN IN THE TABLE BELOW, OR PER LOCAL REGULATIONS. MAXIMUM HYDRAULIC INTERNAL BYPASS CAPACITY VARIES. CONTACT YOUR CONTECH REPRESENTATIVE FOR ADITIONAL INFORMATION.

THE STANDARD SOLID COVER CONFIGURATION IS SHOWN. ALTERNATE CONFIGURATIONS ARE AVAILABLE AND ARE LISTED BELOW.

CONFIGURATION OPTION DESCRIPTION
GRATE INLET (NO INLET PIPE)
GRATE INLET WITH INLET PIPE

VORTSENTRY HS GENERAL INFORMATION

Model	Manhole Diameter (ID) FT	Manhole Diameter (ID) mm	Total Treatment Flow Rate CFS	Total Treatment Flow Rate L/S	Typical Total Distance Rim to Outside Bottom A FT	A m	Typical Distance Rim to Invert B FT	B m	Typical Depth Below Invert (inside) C FT	C mm	Approximate Minimum Distance Rim to Invert FT	m	Maximum Pipe Diameter (ID) IN	mm
HS36	3	900	0.55	15.6	10.16	3.10	4.08	1.24	5.58	1702	3.00	0.91	18	450
HS48	4	1200	1.20	34.0	13.25	4.04	6.00	1.83	6.75	2057	4.00	1.22	24	600
HS60	5	1500	2.20	62.3	15.13	4.61	6.50	1.98	7.96	2426	4.82	1.47	30	750
HS72	6	1800	3.70	104.8	16.56	5.05	6.75	2.06	9.15	2788	5.59	1.70	36	900
HS84	7	2100	5.60	158.6	18.85	5.75	7.75	2.36	10.35	3156	5.00	1.52	42	1050
HS96	8	2400	8.10	229.4	20.87	6.36	8.50	2.59	11.54	3518	6.91	2.11	48	1200

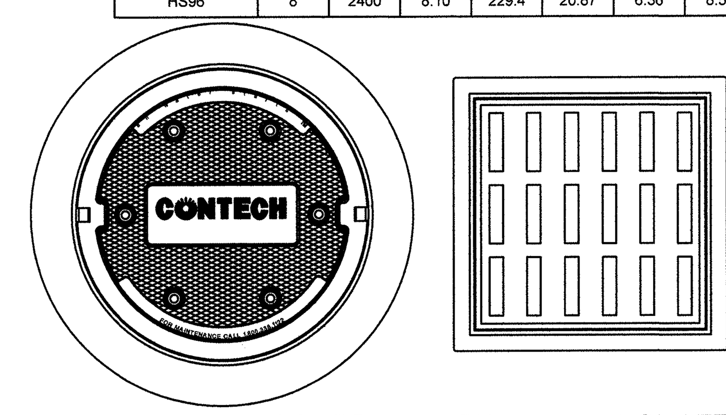

FRAME AND COVER
(DIAMETER VARIES)
N.T.S.

FRAME AND GRATE
(24" SQUARE)
N.T.S.

SITE SPECIFIC DATA REQUIREMENTS

STRUCTURE ID			
WATER QUALITY FLOW RATE (CFS)			
PEAK FLOW RATE (CFS)			
RETURN PERIOD OF PEAK FLOW (YRS)			
PIPE DATA:	I.E.	MATERIAL	DIAMETER
INLET PIPE 1			
OUTLET PIPE			
RIM ELEVATION			
ANTI-FLOTATION BALLAST		WIDTH	HEIGHT
NOTES/SPECIAL REQUIREMENTS:			

* PER ENGINEER OF RECORD

GENERAL NOTES
1. CONTECH TO PROVIDE ALL MATERIALS UNLESS NOTED OTHERWISE.
2. DIMENSIONS MARKED WITH ( ) ARE REFERENCE DIMENSIONS. ACTUAL DIMENSIONS MAY VARY.
3. FOR FABRICATION DRAWINGS WITH DETAILED STRUCTURE DIMENSIONS AND WEIGHT, PLEASE CONTACT YOUR CONTECH ENGINEERED SOLUTIONS LLC REPRESENTATIVE. www.ContechES.com
4. VORTSENTRY HS WATER QUALITY STRUCTURE SHALL BE IN ACCORDANCE WITH ALL DESIGN DATA AND INFORMATION CONTAINED IN THIS DRAWING.
5. STRUCTURE SHALL MEET AASHTO HS20 AND CASTINGS SHALL MEET AASHTO M306 LOAD RATING, ASSUMING GROUNDWATER ELEVATION AT, OR BELOW, THE OUTLET PIPE INVERT ELEVATION. ENGINEER OF RECORD TO CONFIRM ACTUAL GROUNDWATER ELEVATION.

INSTALLATION NOTES
1. ANY SUB-BASE, BACKFILL DEPTH, AND/OR ANTI-FLOTATION PROVISIONS ARE SITE-SPECIFIC DESIGN CONSIDERATIONS AND SHALL BE SPECIFIED BY ENGINEER OF RECORD.
2. CONTRACTOR TO PROVIDE EQUIPMENT WITH SUFFICIENT LIFTING AND REACH CAPACITY TO LIFT AND SET THE VORTSENTRY HS MANHOLE STRUCTURE (LIFTING CLUTCHES PROVIDED).
3. CONTRACTOR TO INSTALL JOINT SEALANT BETWEEN ALL STRUCTURE SECTIONS AND ASSEMBLE STRUCTURE.
4. CONTRACTOR TO PROVIDE, INSTALL, AND GROUT PIPES. MATCH PIPE INVERTS WITH ELEVATIONS SHOWN.
5. CONTRACTOR TO TAKE APPROPRIATE MEASURES TO ASSURE UNIT IS WATER TIGHT, HOLDING WATER TO FLOWLINE INVERT MINIMUM. IT IS SUGGESTED THAT ALL JOINTS BELOW PIPE INVERTS ARE GROUTED.

CONTECH® ENGINEERED SOLUTIONS LLC
9025 Centre Pointe Dr., Suite 400, West Chester, OH 45069
800-338-1122 513-645-7000 513-645-7993 FAX

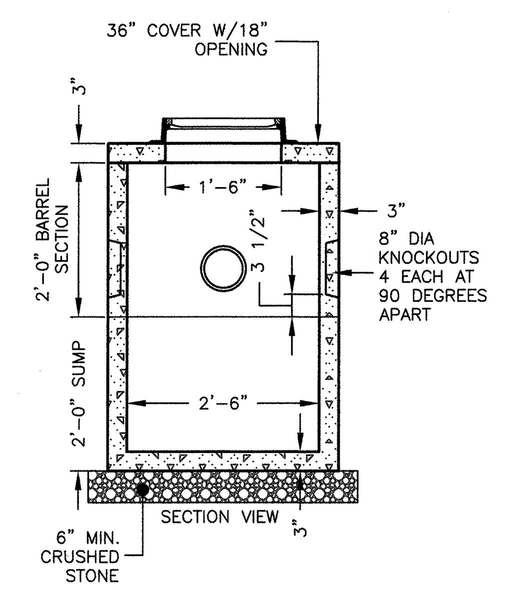

MINI MANHOLE
NOT TO SCALE

NOTES:
1. CONCRETE: 4,000 PSI MINIMUM AFTER 28 DAYS.
2. FLAT COVER WITH CLEANOUT CAN BE USED IN PLACE OF CONE.
3. OPTIONAL ROUND CONCRETE COVER CAN BE USED IN PLACE OF CAST IRON FRAME AND COVER.

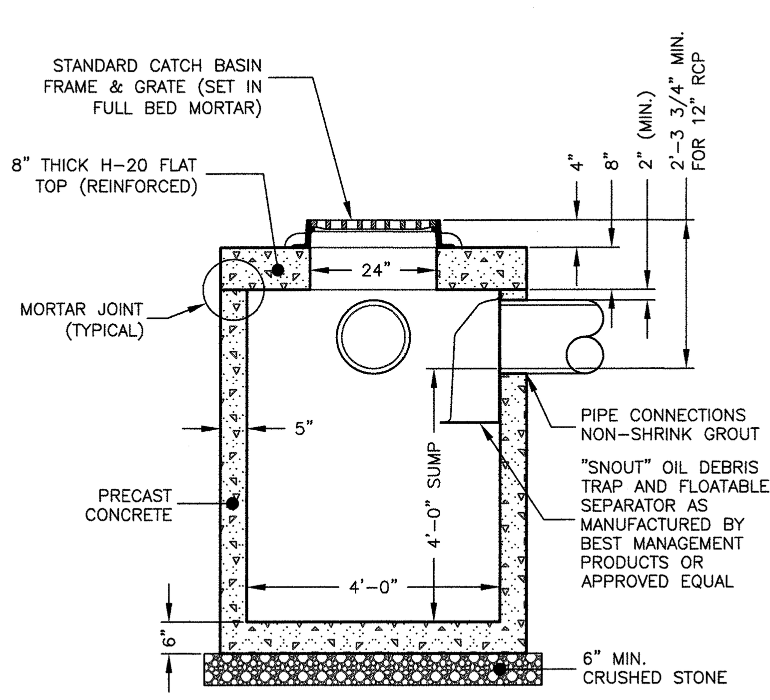

REDUCED COVER CATCH BASIN
NOT TO SCALE

NOTES:
1. CONCRETE: 4,000 PSI MINIMUM AFTER 28 DAYS.
2. REINFORCED STEEL CONFORMS TO LATEST ASTM A185 SPEC. 0.12 SQ. IN./LINEAL FT. AND 0.12 SQ. IN. (BOTH WAYS) BASE BOTTOM.
3. H-20 DESIGN LOADING PER AASHTO HS-20-44; ASTM C478 SPEC FOR "PRECAST REINFORCED CONCRETE MANHOLE SECTIONS."

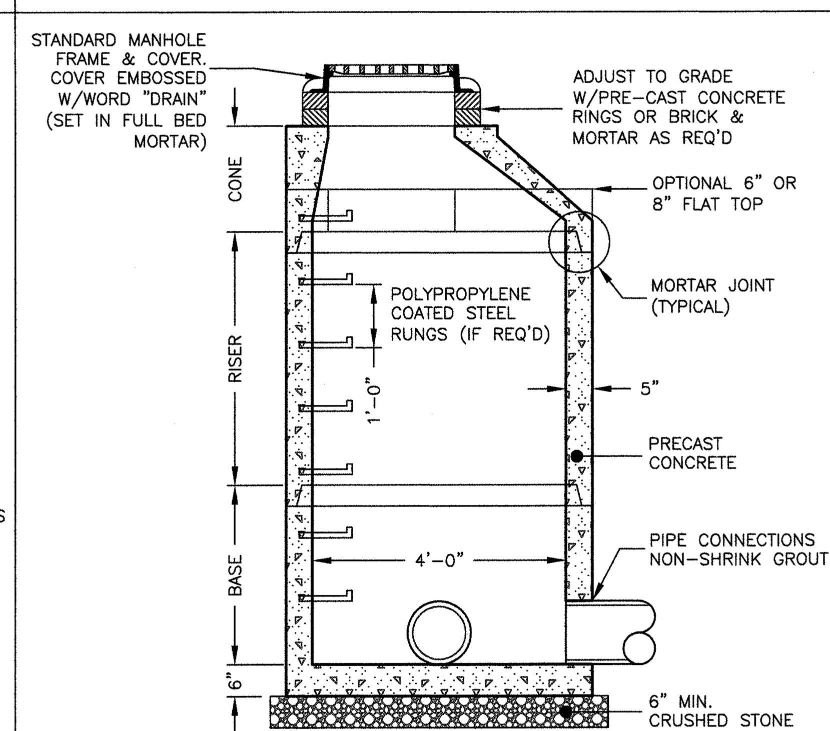

PRE-CAST DRAIN MANHOLE
NOT TO SCALE

NOTES:
1. CONCRETE: 4,000 PSI MINIMUM AFTER 28 DAYS.
2. REINFORCED STEEL CONFORMS TO LATEST ASTM A185 SPEC. 0.12 SQ. IN./LINEAL FT. AND 0.12 SQ. IN. (BOTH WAYS) BASE BOTTOM.
3. H-20 DESIGN LOADING PER AASHTO HS-20-44; ASTM C478 SPEC FOR "PRECAST REINFORCED CONCRETE MANHOLE SECTIONS."

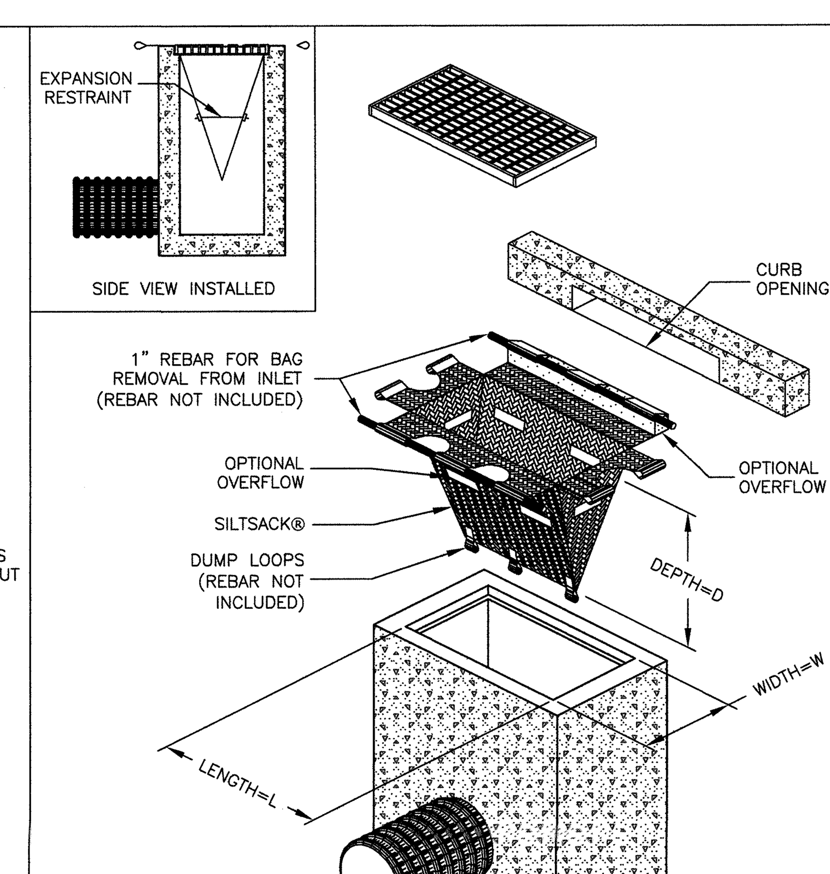

SILTSACK®
NOT TO SCALE

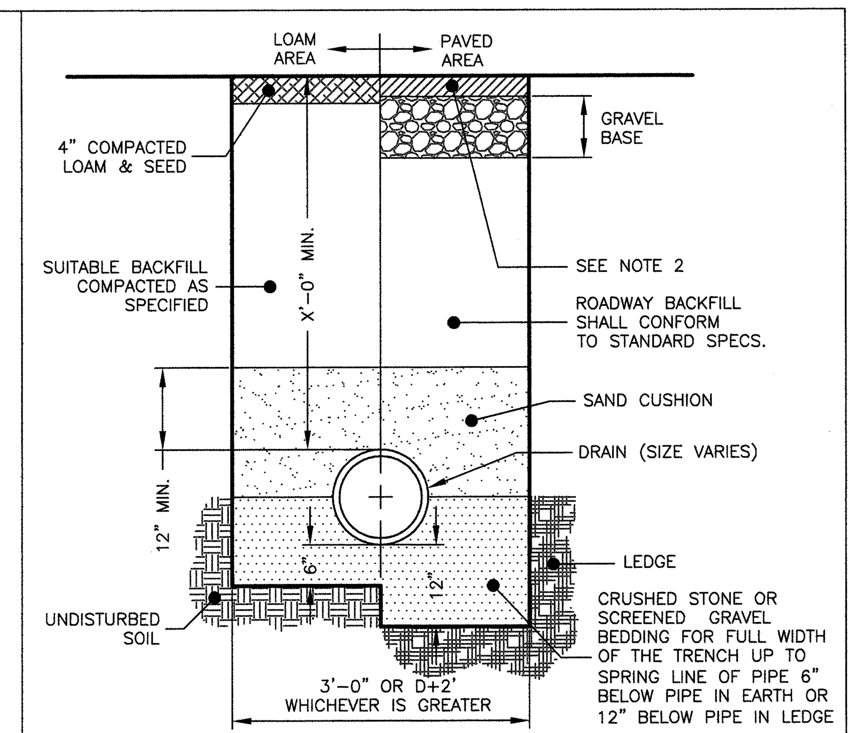

DRAIN/SEWER TRENCH
NOT TO SCALE

NOTES:
1. ALL MATERIAL SHALL CONFORM TO CITY OF BEVERLY DEPARTMENT OF PUBLIC WORKS.
2. NEW ROADWAY CONSTRUCTION SHALL CONFORM TO CITY/TOWN SPECIFICATIONS.
3. IN LIEU OF THE 12" GRAVEL COURSE AND 9" OF CRUSHED GRAVEL, 18" OF CRUSHED GRAVEL OR RECLAIMED STABILIZED BASE MAY BE USED AS A BASE FOR THE PAVEMENT REPAIR.
4. MATERIAL SHALL BE REPLACED IN KIND WHENEVER POSSIBLE.
5. A MINIMUM 2' CUTBACK IS REQUIRED AT THE TOP OF THE TRENCH WALL OVER UNDISTURBED MATERIAL.

Prepared For:
Applicant
Krohne, Inc.
7 Dearborn Road
Peabody, MA 01960

Prepared By:
Hayes Engineering, Inc.
603 Salem Street
Wakefield, MA 01880
Ph: 781.246.2800
Fax: 781.246.7596
www.hayeseng.com

Seal:
COMMONWEALTH OF MASSACHUSETTS ERIC B. LANE CIVIL No. 45469 REGISTERED PROFESSIONAL ENGINEER
8-23-2016

Design By: EBL
Drawn By: EBL
Checked By: PJO
Project File: BEV-0183
Comp. No: BEV105
☒ Issued For Permit
☐ Issued For Review
☐ Issued For Bid
☐ Issued For Construction
☒ Not For Construction

No.	Revision	Date
10		
9		
8		
7		
6		
5		
4		
3		
2		
1		

Scale: 1"=N.T.S.
Date: August 9, 2016

Drawing Title:
SITE DETAILS
KROHNE, INC.
#55 CHERRY HILL DRIVE
BEVERLY, MASS.

Drawing No.:
C4
SHEET 4 OF 4

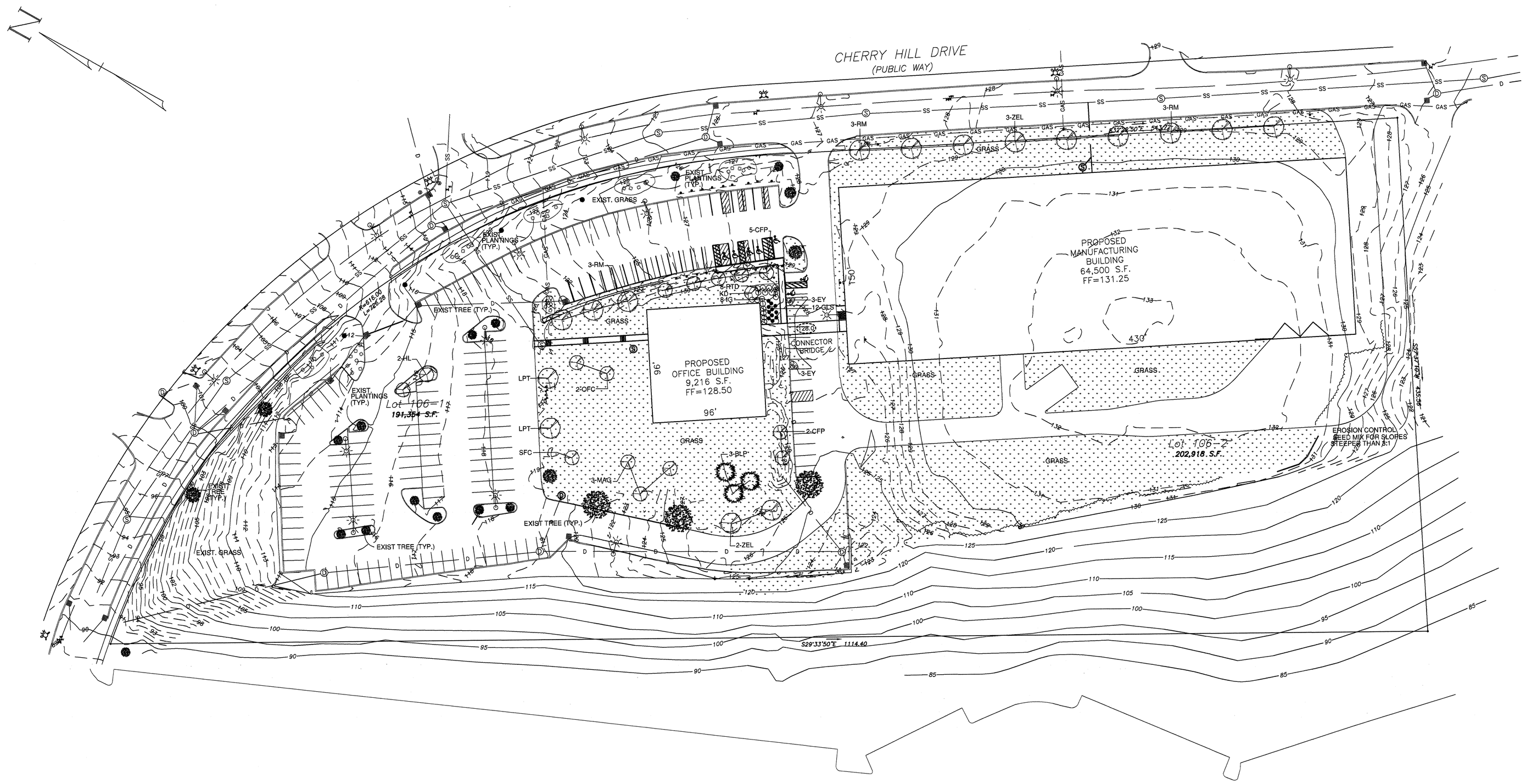

LANDSCAPE KEY

- EXISTING TREE
- EXISTING SHRUBS
- PROPOSED DECIDUOUS TREE
- PROPOSED FLOWERING TREE
- PROPOSED EVERGREEN TREE
- PROPOSED SHRUBS
- PROPOSED GRASS AREA

EROSION CONTROL SEED MIX:

Creeping Red Fescue, (Festuca rubra), Canada Wild Rye, (Elymus canadensis), Annual Ryegrass, (Lolium multiflorum), Perennial Ryegrass, (Lolium perenne), Blue Grama, (Bouteloua gracilis), Little Bluestem, (Schizachyrium scoparium), Indian Grass, (Sorghastrum nutans), Rough Bentgrass, (Agrostis scabra), Upland Bentgrass, (Agrostis perennans).

Plant Schedule

Qty	Key	Botanical Name	Common Name	Size
TREES:				
3	BLP	Pinus flexilis 'Vanderwolf'	Vanderwolf's Blue Limber Pine	8-10'
7	CFP	Pyrus calleryana 'Chanticleer'	Chanticleer Flowering Pear	2.5-3"cal
2	HL	Gleditsia triacanthos 'Skyline'	Honeylocust	2.5-3"cal
1	KD	Cornus kousa	Korean Dogwood	2.5-3"cal
2	LPT	Platanux x acerfolia	London Plane Tree	2.5-3"cal
3	MAG	Magnolia x soulangiana	Saucer Magnolia	8-10'
2	OFC	Prunus x incamp 'Okame'	Okame Flowering Cherry	2.5-3"cal
9	RM	Acer rubrum 'Red Sunset'	Red Sunset Maple	2.5-3"cal
1	SFC	Malus 'Snowdrift'	Snowdrift Flowering Crab	2.5-3"cal
5	ZEL	Zelkova serrata 'Green Vase'	Green Vase Zelkova	2.5-3"cal
SHRUBS:				
6	EY	Taxus baccata 'repandens'	English Spreading Yew	18-24"
12	GLS	Rhus aromatica 'Gro-Low'	Gro-Low Sumac	18-24"
8	IG	Ilex glabra 'Shamrock'	Shamrock Inkberry	2-2.5'
8	RTD	Cornus alba 'Elegantissima'	Variegated Red Twig Dogwood	2-3'

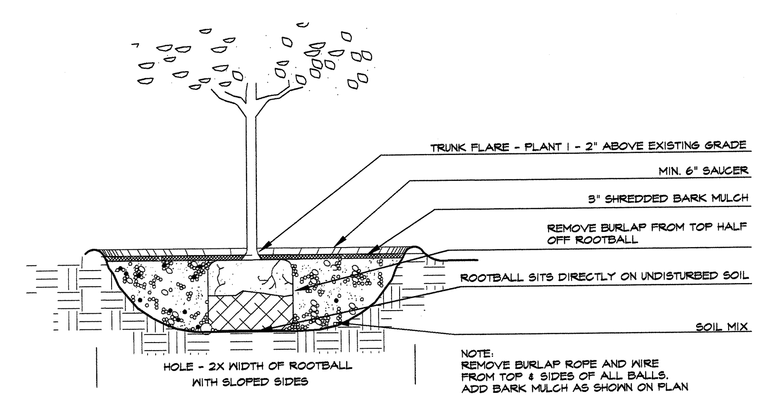

SECTION 3 / L-1 **TREE PLANTING**
SCALE: 1/2"=1'-0"

Prepared For:

Applicant
Krohne, Inc.
7 Dearborn Road
Peabody, MA 01960

Prepared By:

Hayes Engineering, Inc.
603 Salem Street
Wilmington, MA 01887
Ph: 781-246-2800
Fax: 781-246-7596
www.hayesengr.com

Seal:

Design By: EBL
Drawn By: EBL
Checked By: PJO
Project File: BEV-0183
Comp. No: BEV105
☒ Issued For Permit
☐ Issued For Review
☐ Issued For Bid
☐ Issued For Construction
☒ Not For Construction

No.	Revision	Date
1		
2		
3		
4		
5		
6		
7		
8		
9		
10		

Scale: 1"=40'
0' 20' 40' 80'
Date: August 9, 2016

Drawing Title:

LANDSCAPE PLAN
KROHNE, INC.
#55 CHERRY HILL DRIVE
BEVERLY, MASS.

james k. emmanuel | associates
LANDSCAPE ARCHITECTS
22 Carlton Rd.
Marblehead, MA 01945
tel. (781) 622-7487
fax (781) 623-0293
james@jamesemmanuel.com
www.jamesemmanuel.com

Drawing No.: L-1

SHEET 1 OF 1