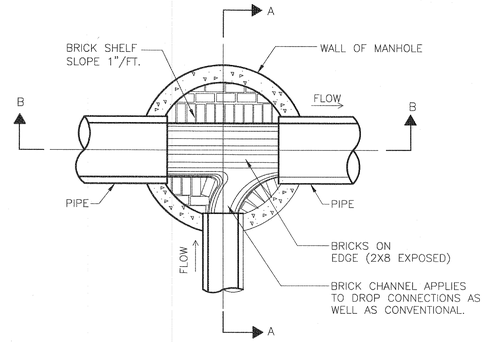

PLAN

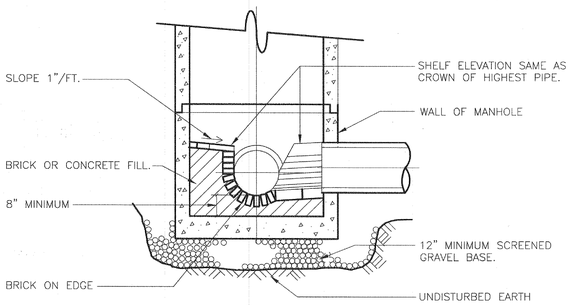

SECTION A–A

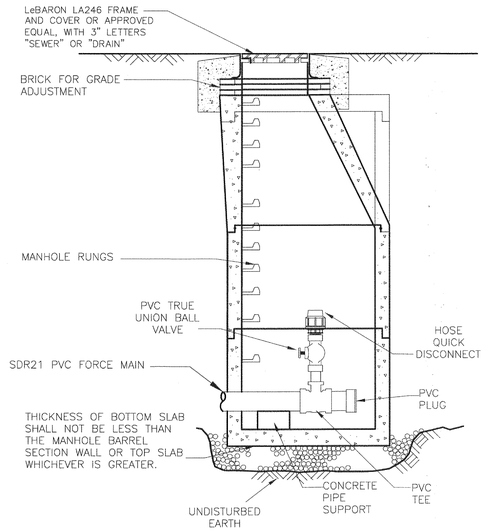

TERMINAL FLUSHING STATION DETAIL
(NOT TO SCALE)

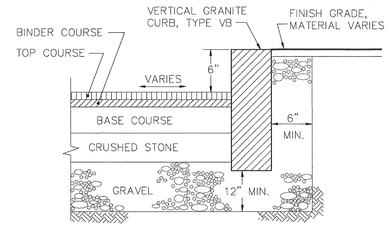

VERTICAL GRANITE CURB DETAIL
(NOT TO SCALE)

CLERKS CERTIFICATION ON THE PLAN

DATE: _____

I, CLERK OF THE CITY OF BEVERLY, DO HEREBY CERTIFY THAT THE NOTICE OF APPROVAL OF THIS PLAN BY THE PLANNING BOARD HAS BEEN RECEIVED AND RECORDED AT THIS OFFICE AND THAT NO APPEAL WAS RECEIVED DURING THE TWENTY DAYS NEXT AFTER SUCH RECEIPT AND RECORDING OF SAID NOTICE.

_____
CITY CLERK

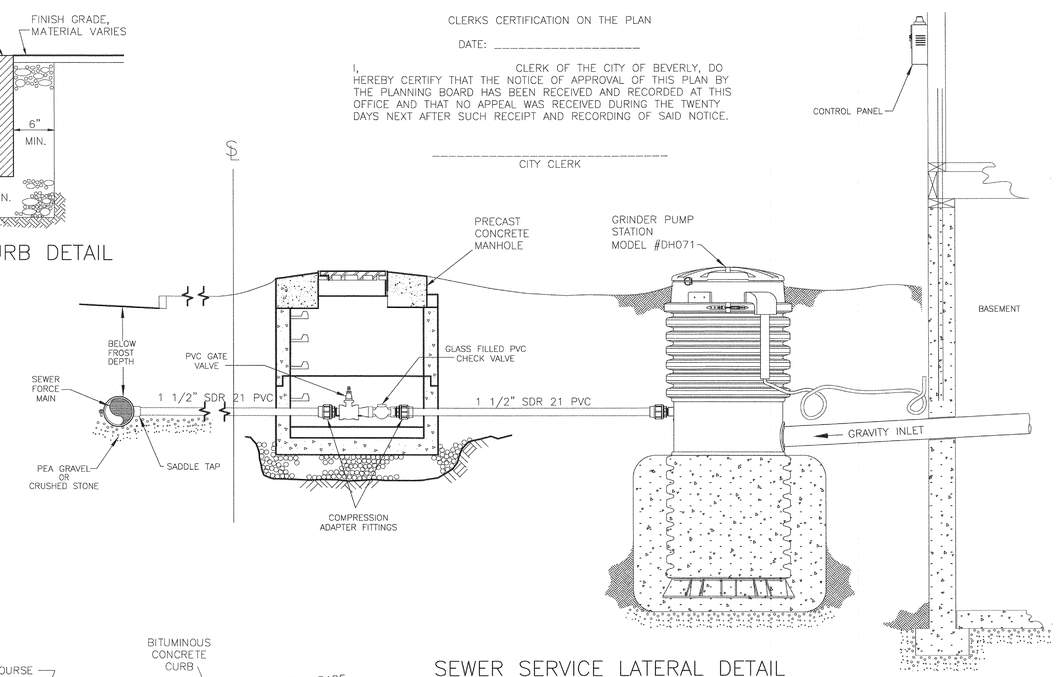

SEWER SERVICE LATERAL DETAIL
(NOT TO SCALE)

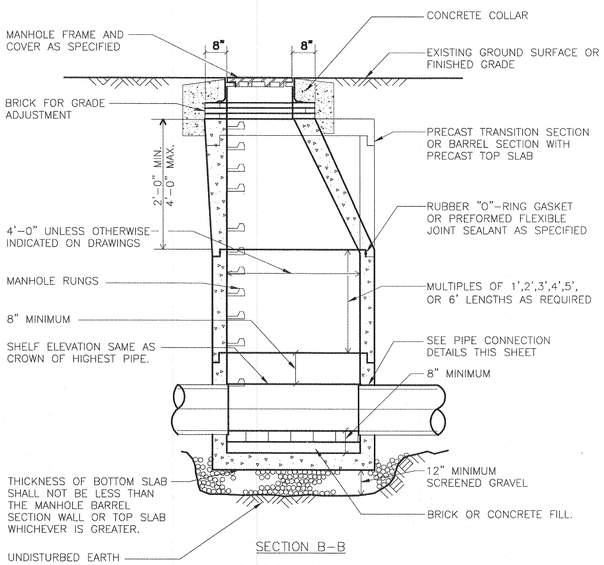

SECTION B–B

PRECAST SEWER MANHOLE DETAIL
(NOT TO SCALE)

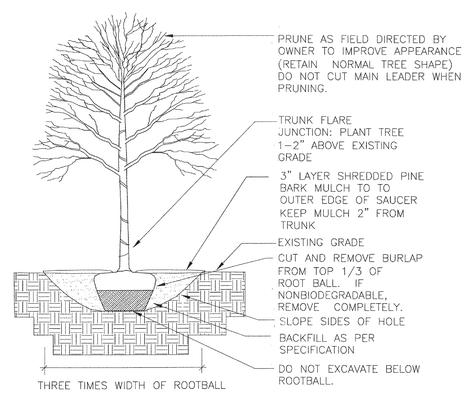

DECIDUOUS TREE PLANTING DETAIL
(NOT TO SCALE)

TREE SHALL BE AT LEAST 12' IN HEIGHT, 2" IN CALIPER MEASURED 4' ABOVE THE APPROVED GRADE, AND PLANTED IN AT LEAST 1/2 CUBIC YARD OF TOPSOIL.

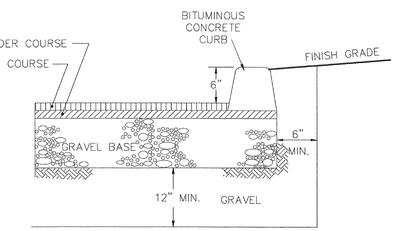

BITUMINOUS CONCRETE CURB DETAIL
(NOT TO SCALE)

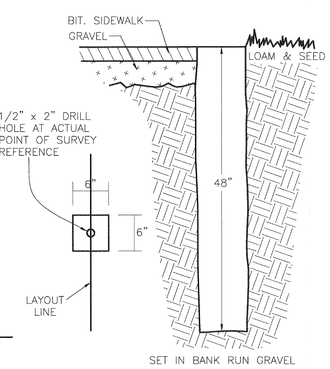

GRANITE BOUND DETAIL
(NOT TO SCALE)

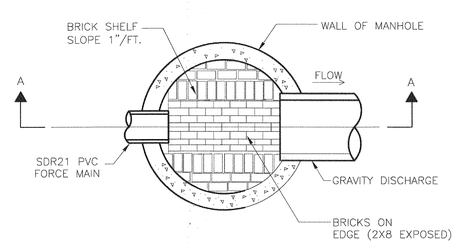

PLAN

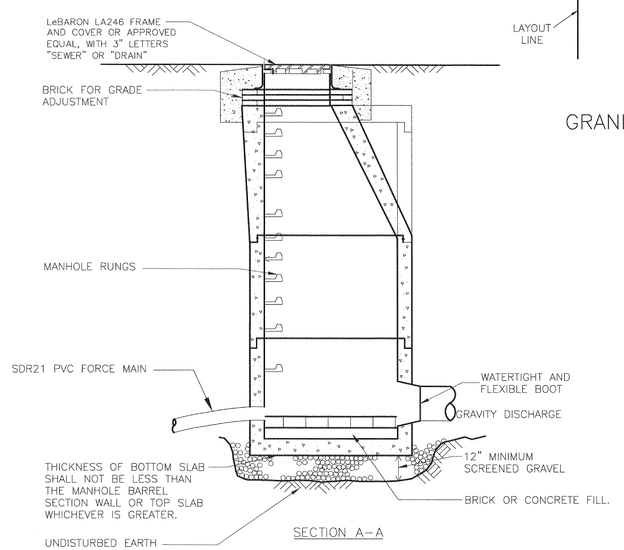

SECTION A–A

FORCEMAIN AT DISCHARGE MANHOLE DETAIL
(NOT TO SCALE)

BEVERLY PLANNING BOARD

_____

_____

_____

_____

_____

DATE: _____

I CERTIFY THAT I HAVE CONFORMED WITH THE RULES AND REGULATIONS OF THE REGISTERS OF DEEDS IN PREPARING THIS PLAN.

_____
WILLIAMS & SPARAGES LLC

COMMONWEALTH OF MASSACHUSETTS
RICHARD L. WILLIAMS
CIVIL
No. 40190
REGISTERED PROFESSIONAL ENGINEER
7/9/15

WILLIAMS & SPARAGES
ENGINEERS • PLANNERS • SURVEYORS
189 NORTH MAIN STREET
SUITE 101
MIDDLETON, MA 01949
PHONE: (978) 539-8088
FAX: (978) 539-8200

NO.	REVISION	DATE

OSRD CONSTRUCTION DETAILS
COVE VILLAGE
BEVERLY, MA

APPLICANT:
SYMES DEVELOPMENT & PERMITTING LLC
50 DODGE STREET
BEVERLY, MA 01915
(978)–922–5300

PROJECT LOCUS:
50 & 54 BOYLES STREET
BEVERLY, MA 01915

ASSESSORS REFERENCE:
PARCEL ID: 33–12 & 33–13

OWNERS:
MONTROSE SCHOOL PARK LLC
50 DODGE STREET
BEVERLY, MA 01915
DEED REFERENCE: BOOK 33828 PAGE 65
PARCEL ID: 33–13

RAYMOND F. PAPE & SUZANNE CLERKIN
50 BOYLES STREET
BEVERLY, MA 01915
DEED REFERENCE: BOOK 26220 PAGE 393
PARCEL ID: 33–12

0' 20' 40' 80'
SCALE: 1"=40'
JULY 10, 2015

DETAIL PLAN 3 OF 3

SHEET 6 OF 6

P:\BEVE-0035(50-54 Boyles Street)\Drawings\Osrd.dwg, JCR