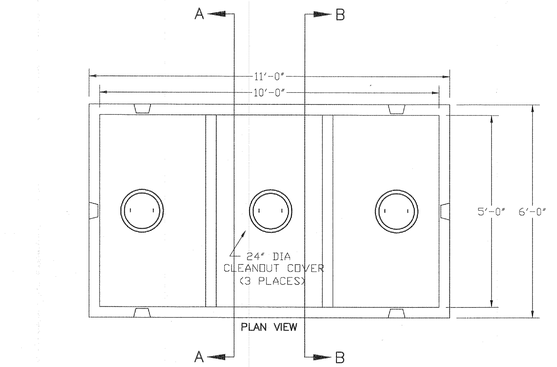

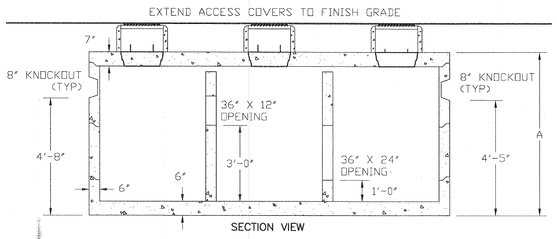

NOTES:
1. CONCRETE: 5,000 PSI MINIMUM AFTER 28 DAYS.
2. DESIGNED FOR H-20 LOADING. ALSO AVAILABLE IN H-10 LOADING WITH 3" WALL.
3. TONGUE AND GROOVE JOINT SEALED WITH BUTYL RESIN.

SEDIMENT AND OIL SEPARATOR DETAIL
(NOT TO SCALE)

CULTEC RECHARGER 330XL HD HEAVY DUTY TYPICAL CROSS SECTION

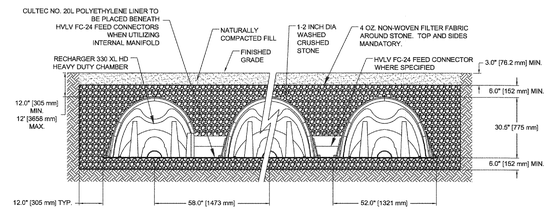

GENERAL NOTES
RECHARGER 330XL HD BY CULTEC, INC. OF BROOKFIELD, CT.
STORAGE PROVIDED = 11.32 CF/FT PER DESIGN UNIT.
REFER TO CULTEC, INC.'S CURRENT RECOMMENDED INSTALLATION GUIDELINES.
USE RECHARGER 330XL HD HEAVY DUTY FOR TRAFFIC AND/OR H-25 APPLICATIONS.

ALL RECHARGER 330XL HD HEAVY DUTY UNITS ARE MARKED WITH A COLOR STRIPE FORMED INTO THE PART ALONG THE LENGTH OF THE CHAMBER.
ALL RECHARGER 330XL HD CHAMBERS MUST BE INSTALLED IN ACCORDANCE WITH ALL APPLICABLE LOCAL, STATE AND FEDERAL REGULATIONS.

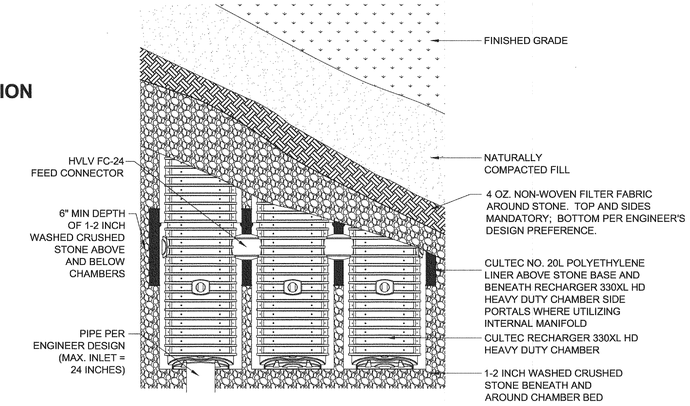

CULTEC RECHARGER 330XL HD HEAVY DUTY PLAN VIEW

TYPICAL UN-PAVED INSPECTION PORT DETAIL

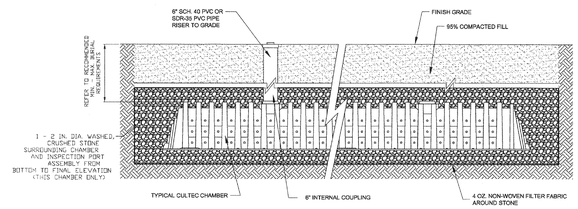

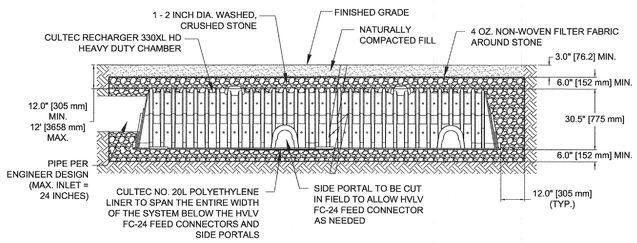

CULTEC INTERNAL MANIFOLD DETAIL

NOTE: THE CULTEC MODEL SHOWN HERE MAY BE REPLACED WITH A SUITABLE EQUIVALENT APPROVED BY THE DESIGN ENGINEER.

CLERKS CERTIFICATION ON THE PLAN

DATE: _____

I, CLERK OF THE CITY OF BEVERLY, DO HEREBY CERTIFY THAT THE NOTICE OF APPROVAL OF THIS PLAN BY THE PLANNING BOARD HAS BEEN RECEIVED AND RECORDED AT THIS OFFICE AND THAT NO APPEAL WAS RECEIVED DURING THE TWENTY DAYS NEXT AFTER SUCH RECEIPT AND RECORDING OF SAID NOTICE.

_____
CITY CLERK

BEVERLY
PLANNING BOARD

_____

_____

_____

_____

_____

DATE: _____

I CERTIFY THAT I HAVE CONFORMED WITH THE RULES AND REGULATIONS OF THE REGISTERS OF DEEDS IN PREPARING THIS PLAN.

_____
WILLIAMS & SPARAGES LLC

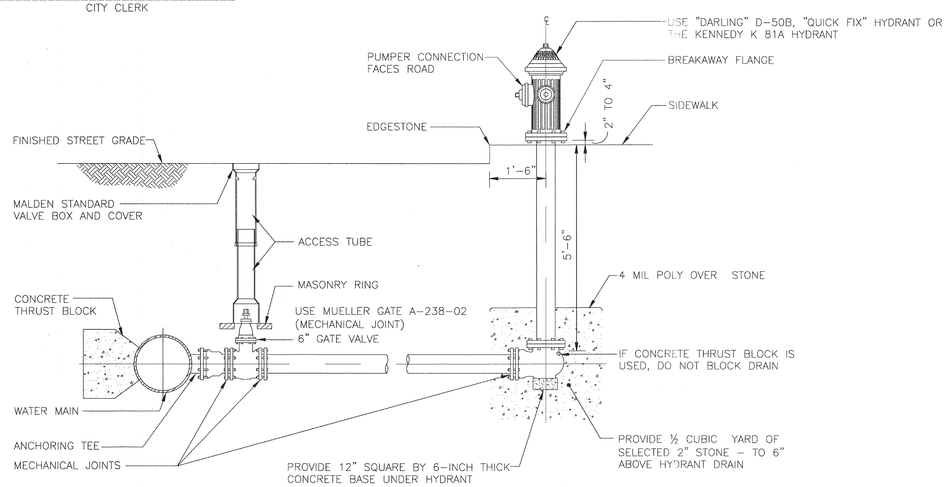

TYPICAL FIRE HYDRANT CONNECTION FOR HIGH OR LOW SERVICE LINE DETAIL
(NOT TO SCALE)

NOTE:
CONCRETE THRUST BLOCK TO BE USED ONLY WHERE IT WILL BEAR ON UNDISTURBED EARTH.
USE RESTRAINED JOINT FITTINGS (MEGALUG OR APPROVED EQUAL) WHERE CONCRETE THRUST BLOCK IS UNACCEPTABLE.
SIZE OF BLOCK OR MEGALUG TO BE DESIGNED FOR 1.5 TIMES NORMAL OPERATING PRESSURE.

GRASS INFILTRATION SWALE SPILLWAY CONSTRUCTION DETAIL
(NOT TO SCALE)

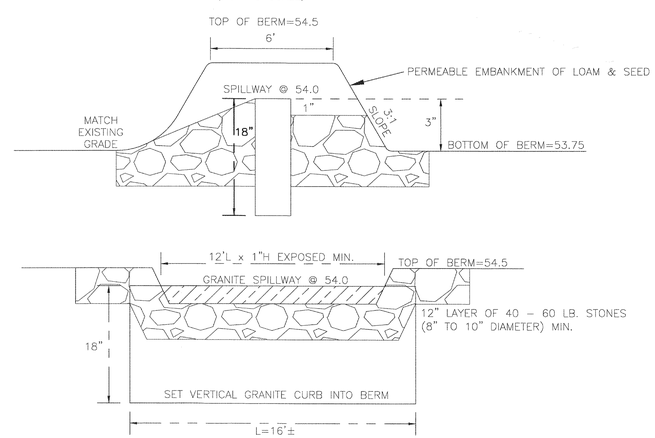

COMMONWEALTH OF MASSACHUSETTS
RICHARD L. WILLIAMS
CIVIL
No. 40190
REGISTERED PROFESSIONAL ENGINEER
7/13/15

WILLIAMS & SPARAGES
ENGINEERS · PLANNERS · SURVEYORS
189 NORTH MAIN STREET
SUITE 101
MIDDLETON, MA 01949
PHONE: (978) 539-8088
FAX: (978) 539-8200

NO.	REVISION	DATE

OSRD CONSTRUCTION DETAILS
COVE VILLAGE
BEVERLY, MA

APPLICANT:
SYMES DEVELOPMENT & PERMITTING LLC
50 DODGE STREET
BEVERLY, MA 01915
(978)-922-5300

PROJECT LOCUS:
50 & 54 BOYLES STREET
BEVERLY, MA 01915

ASSESSORS REFERENCE:
PARCEL ID: 33-12 & 33-13

OWNERS:
MONTROSE SCHOOL PARK LLC
50 DODGE STREET
BEVERLY, MA 01915
DEED REFERENCE: BOOK 33828 PAGE 65
PARCEL ID: 33-13

RAYMOND F. PAPE & SUZANNE CLERKIN
50 BOYLES STREET
BEVERLY, MA 01915
DEED REFERENCE: BOOK 26220 PAGE 393
PARCEL ID: 33-12

0' 20' 40' 80'
SCALE: 1"=40'
JULY 10, 2015

DETAIL PLAN 2 OF 3

SHEET 5 OF 6

P:\BEVE-0035(50-54 Boyles Street)\Drawings\Osrd.dwg, JOR