LEGEND

- CAPE COD BERM — CCB
- EDGE PAVEMENT — EP
- LEDGE
- RETAINING WALL
- UTILITY POLE — UP #18
- OVERHEAD WIRE — OHW
- RIP RAP
- POST & RAIL FENCE
- WIRE FENCE
- TREE (O=OAK) (P=PINE) (M=MAPLE) (S=SPRUCE) — 15"O
- MAIL BOX — MB
- LIGHT
- EXISTING SPOT ELEVATION — × 54.25
- EXISTING CONTOUR — 54
- DRAIN MANHOLE — D
- CATCH BASIN
- SEWER MANHOLE — S
- HYDRANT
- WATER GATE — WG
- HEDGES — HEDGES

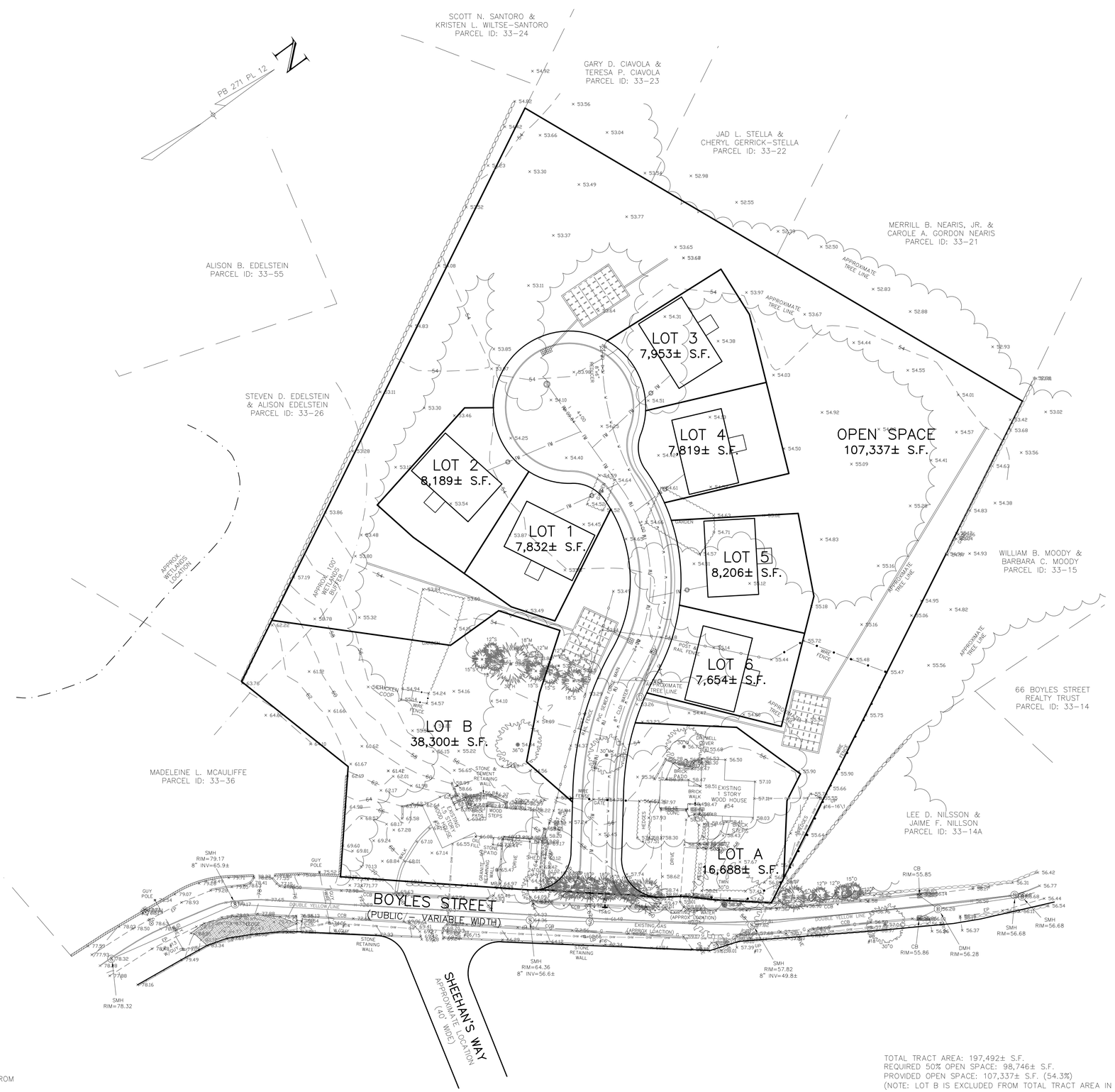

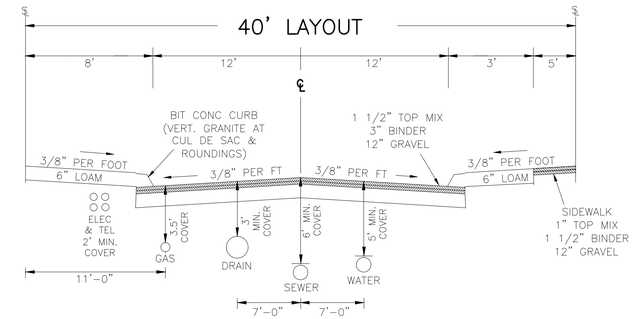

TYPICAL ROAD CROSS SECTION
(NOT TO SCALE)

WILLIAMS & SPARAGES
ENGINEERS · PLANNERS · SURVEYORS
189 NORTH MAIN STREET
SUITE 101
MIDDLETON, MA 01949
PHONE: (978) 539-8088
FAX: (978) 539-8200

NO.	REVISION	DATE

OSRD CONCEPTUAL PLAN (OPTION 2)
50 & 54 BOYLES STREET
BEVERLY, MA

APPLICANT:
SYMES DEVELOPMENT & PERMITTING LLC
50 DODGE STREET
BEVERLY, MA 01915
(978)-922-5300

PROJECT LOCUS:
50 & 54 BOYLES STREET
BEVERLY, MA 01915

ASSESSORS REFERENCE:
PARCEL ID: 33-12 & 33-13

OWNERS:
MONTROSE SCHOOL PARK LLC
50 DODGE STREET
BEVERLY, MA 01915
DEED REFERENCE: BOOK 33828 PAGE 65
PARCEL ID: 33-13

RAYMOND F. PAPE & SUZANNE CLERKIN
50 BOYLES STREET
BEVERLY, MA 01915
DEED REFERENCE: BOOK 26220 PAGE 393
PARCEL ID: 33-12

0' 20' 40' 80'
SCALE: 1"=40'
MARCH 31, 2015

CONCEPTUAL PLAN 2 OF 2

SHEET 4 OF 5

TOTAL TRACT AREA: 197,492± S.F.
REQUIRED 50% OPEN SPACE: 98,746± S.F.
PROVIDED OPEN SPACE: 107,337± S.F. (54.3%)
(NOTE: LOT B IS EXCLUDED FROM TOTAL TRACT AREA IN THESE CALCULATIONS.)

DATUM: BEVERLY CITY BASE (SUBTRACT 6.34' FROM BEVERLY CITY BASE TO OBTAIN NAVD88 DATUM.

P:\BEVE-0035\50-54 Boyles Street\Drawings\CPTosrd-option2.dwg, JDR